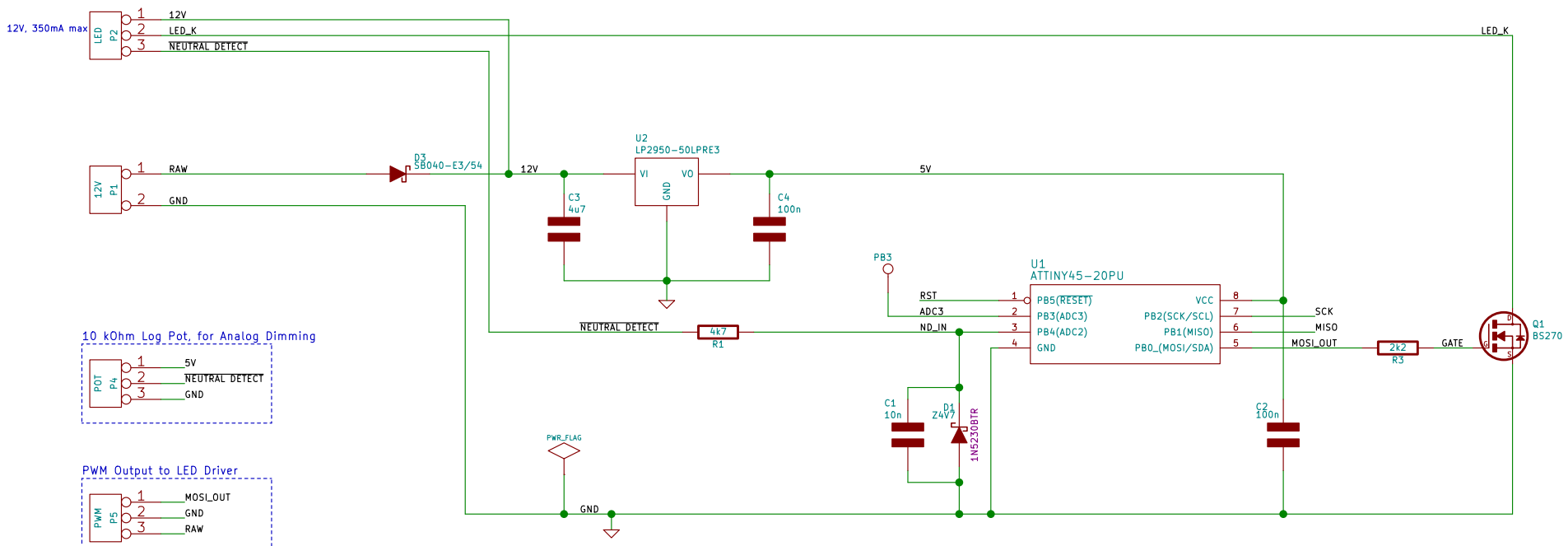

10 kOhm Log Pot, for Analog Dimming

PWM Output to LED Driver

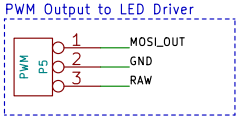

ISP Programming Interface

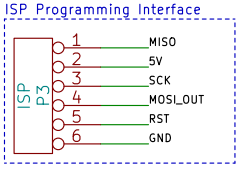

#	PIN	ALT PIN
1	RST	RST
2	Pin A3	Pin D3
3	Pin A2	Pin D4
4	GND	GND
5	Pin D0, PWM	MOSI / SDA
6	Pin D1, PWM	MISO
7	Pin D2, Pin A1	SCK / SCL
8	VCC	VCC

ATTiny45	<>	ARDUINO
1 RST	<>	RST Pin 10
2 Pin A3	<>	x
3 Pin A2	<>	x
4 GND	<>	GND
5 Pin D0, PWM	<>	MOSI Pin 11
6 Pin D1, PWM	<>	MISO Pin 12
7 Pin D2, Pin A1	<>	SCK Pin 13
8 VCC	<>	VCC

NOTES : p.u.l.s.e : rev 2

1. Replaced Zener+Resistor with 5V LDO+Capacitors, for better voltage regulation and lower heat dissipation.
2. Added P5. This connects to external high power LED Driver.
   p.u.l.s.e can be used to adjust brightness (using pot) of external LED driver. RAW is 12V input from LED Driver, and MOSI_OUT is PWM output.
3. Added P4 for connecting potentiometer to adjust LED brightness manually. Logarithmic Pot of 10k offers better low end dimming compared to linear pot.

www.wyolum.com
WyoLum
Sheet: /
File: pulse_v3.sch

Title: p.u.l.s.e – Motorcycle "breathing" lamp

Size: A4	Date: 21 jul 2012	Rev: A
KiCad E.D.A. kicad (2014-05-21 BZR 4875)-product		Id: 1/1