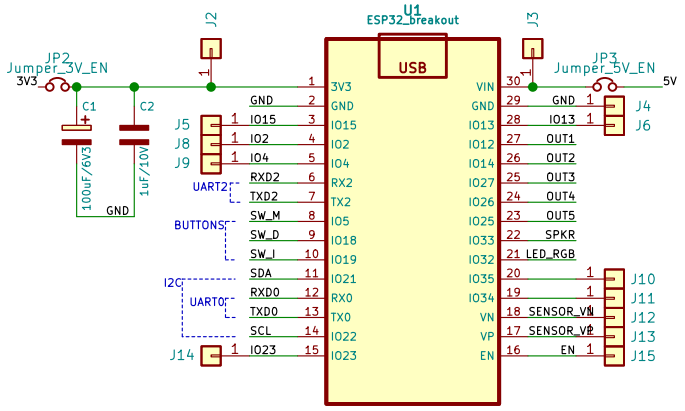

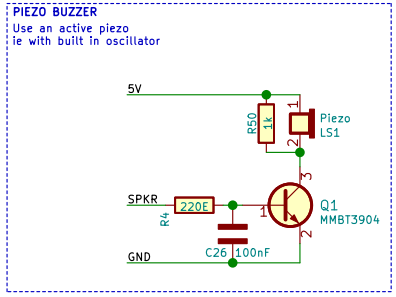

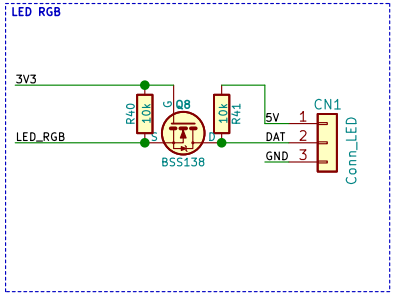

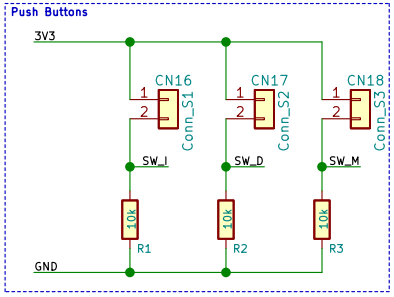

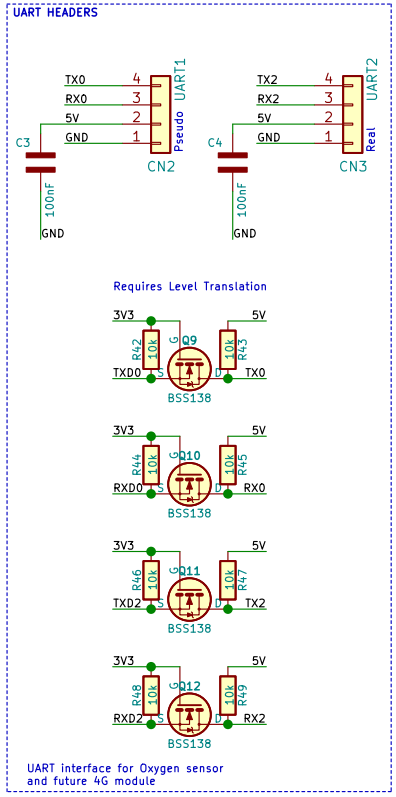

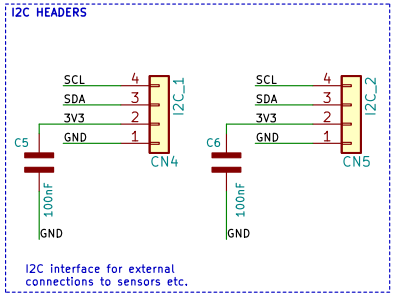

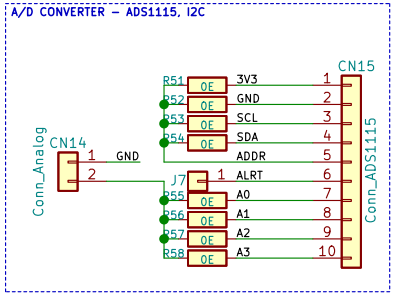

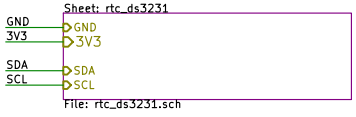

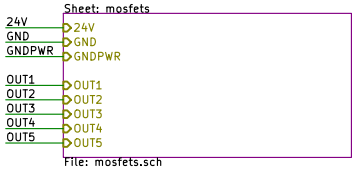

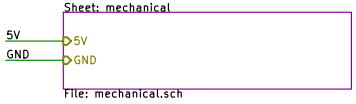

Vayu

Sheet: /

File: vayuO2.sch

open source hardware

Title: vayuO2 – controller for Oxygen Concentrator

Size: A4	Date: 2021-10-14	Rev: rev 3
KiCad E.D.A. kicad 5.1.9-73d0e3b20d88ubuntu20.04.1		Id: 1/5

5V Supply for O2 Sensor

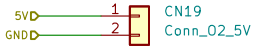

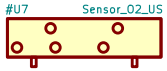

MECHANICAL FOOTPRINT
FOR ULTRASONIC O2 SENSOR

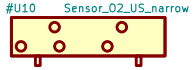

ALTERNATE MECHANICAL FOOTPRINT
FOR ULTRASONIC O2 SENSOR

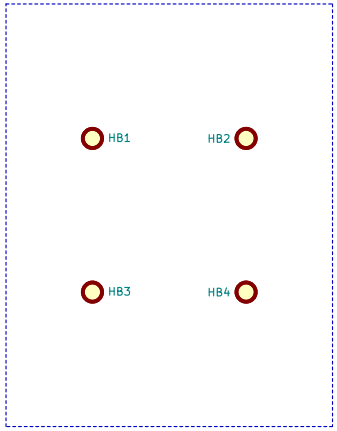

https://github.com/wyolum/ClockIOT
Vayu

Sheet: /mechanical/
File: mechanical.sch

Title: vayuO2

Size: A4	Date: 2021-10-11	**Rev: rev 2**
KiCad E.D.A. kicad 5.1.9-73d0e3b20d88ubuntu20.04.1		Id: 2/5

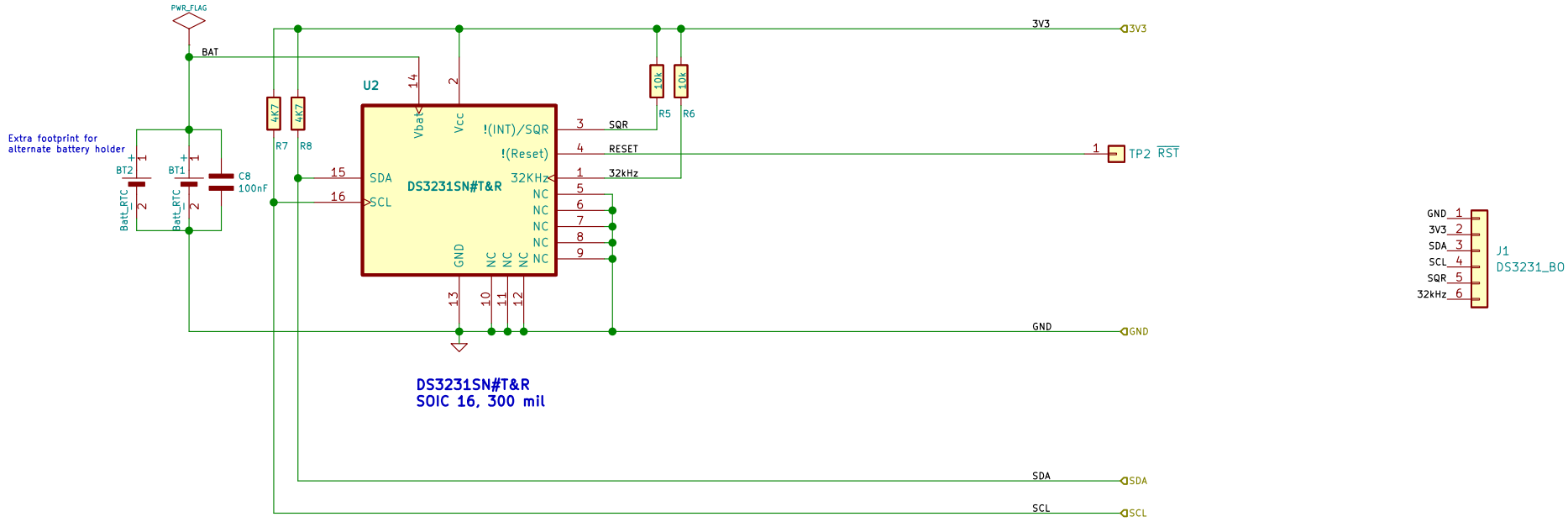

https://github.com/wyolum/ClockIOT

Vayu

Sheet: /rtc_ds3231/
File: rtc_ds3231.sch

Title: vayu02

Size: A4	Date: 2021-10-11	**Rev: rev 2**
KiCad E.D.A. kicad 5.1.9-73d0e3b20d88ubuntu20.04.1		Id: 3/5

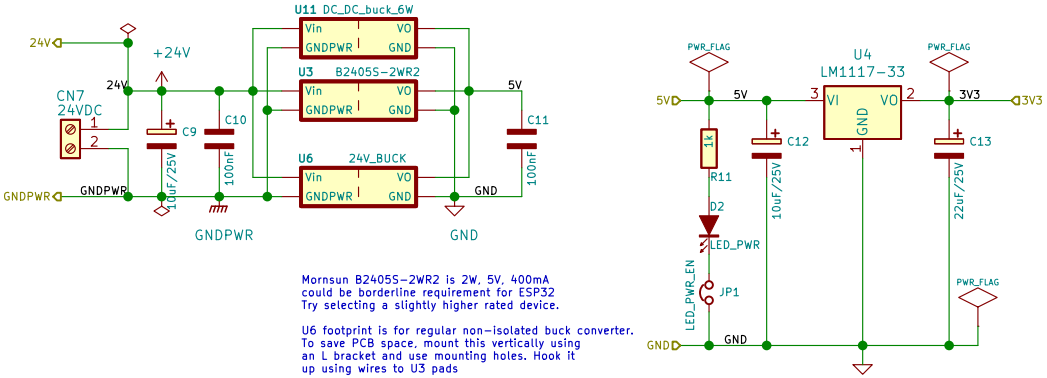

https://github.com/wyolum/ClockIOT

Vayu

Sheet: /esp_pwr_uart/

File: esp_pwr_uart.sch

Title: vayu02

Size: A4	Date: 2021-10-11	**Rev: rev 2**
KiCad E.D.A. kicad 5.1.9-73d0e3b20d88ubuntu20.04.1		Id: 4/5

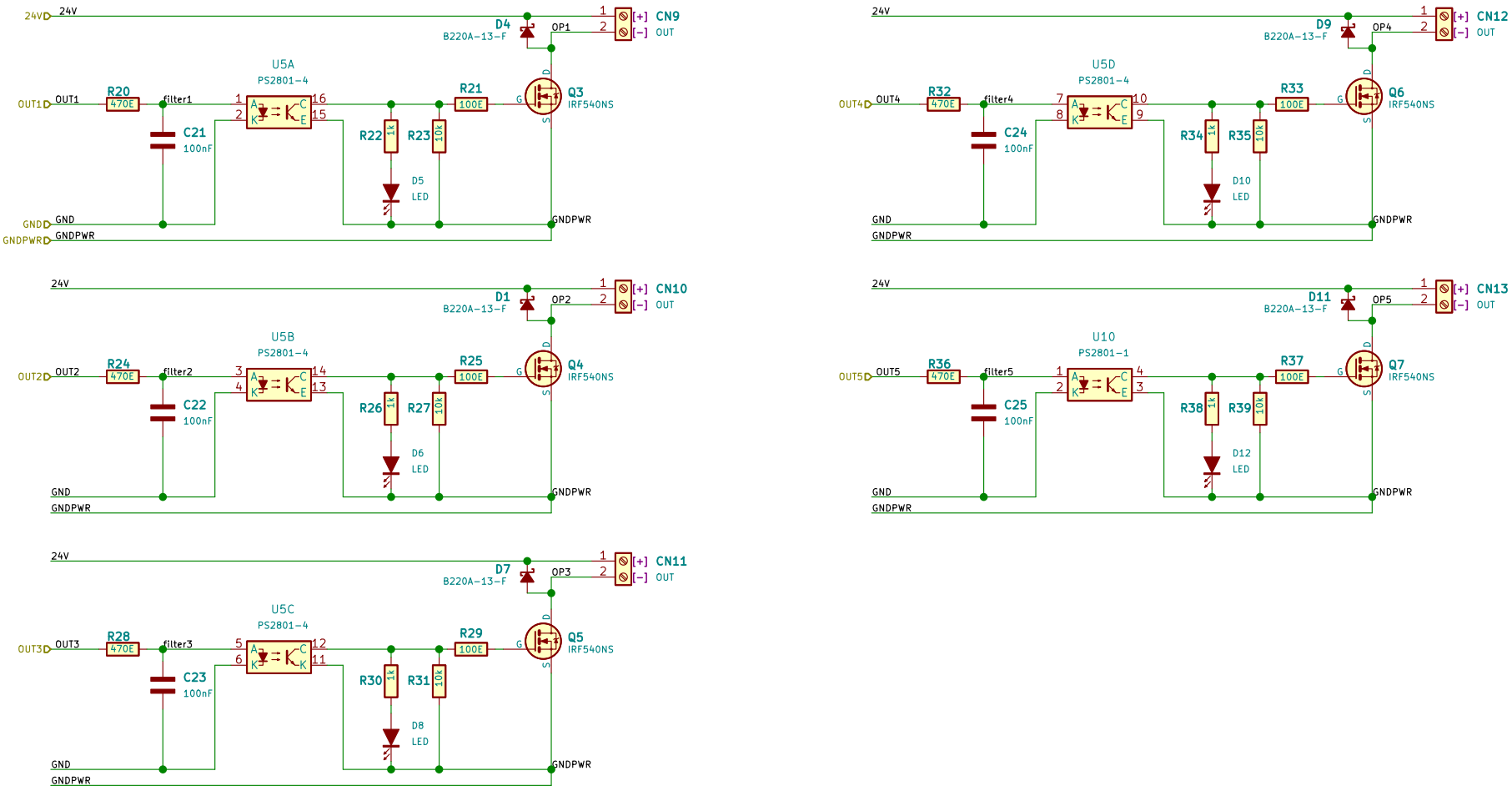

controller for Cafe Veloce eBicycle

Vayu

Sheet: /mosfets/

File: mosfets.sch

Title: vayu02

Size: A4	Date: 2021-10-11	**Rev: rev 2**
KiCad E.D.A. kicad 5.1.9-73d0e3b20d88ubuntu20.04.1		Id: 5/5