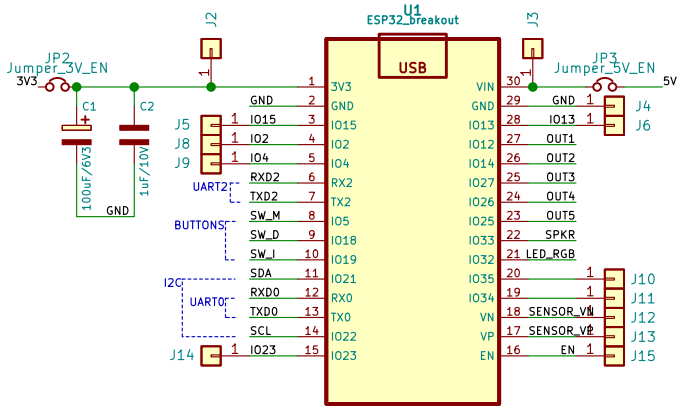

PIEZO BUZZER

Use an active piezo
ie with built in oscillator

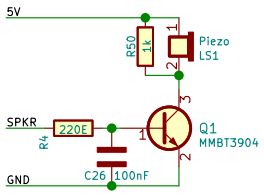

LED RGB

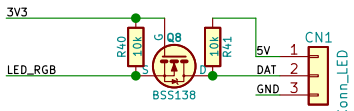

Push Buttons

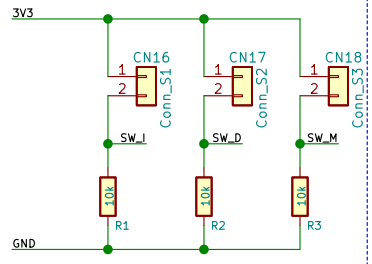

UART HEADERS

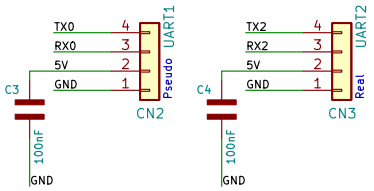

Requires Level Translation

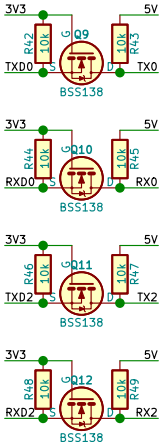

UART interface for Oxygen sensor
and future 4G module

I2C HEADERS

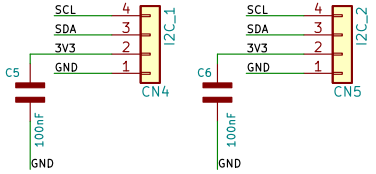

I2C interface for external
connections to sensors etc.

A/D CONVERTER – ADS1115, I2C

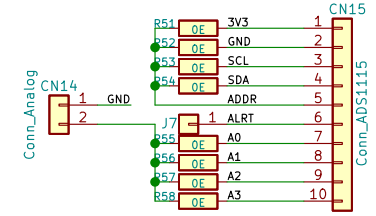

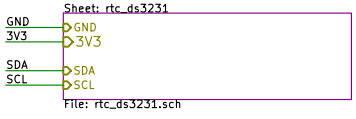

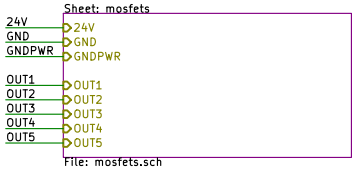

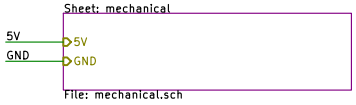

Vayu

Sheet: /
File: vayu02.sch

open source hardware

Title: vayu02 – controller for Oxygen Concentrator

Size: A4	Date: 2021-10-14	Rev: rev 3
KiCad E.D.A. kicad 5.1.12-84ad8e8a8692ubuntu20.04.1		Id: 1/5

5V Supply for O2 Sensor

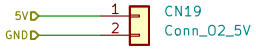

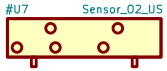

MECHANICAL FOOTPRINT
FOR ULTRASONIC O2 SENSOR

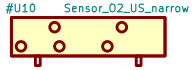

ALTERNATE MECHANICAL FOOTPRINT
FOR ULTRASONIC O2 SENSOR

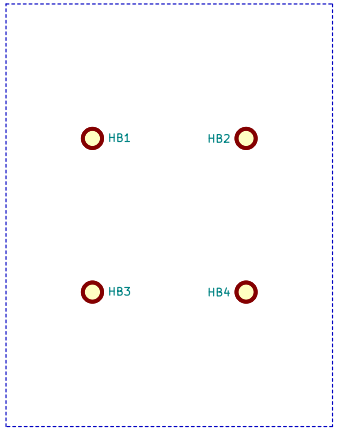

https://github.com/wyolum/ClockIOT
Vayu

Sheet: /mechanical/
File: mechanical.sch

Title: vayuO2

Size: A4	Date: 2021-10-11	**Rev: rev 2**
KiCad E.D.A. kicad 5.1.12-84ad8e8a8692ubuntu20.04.1		Id: 2/5

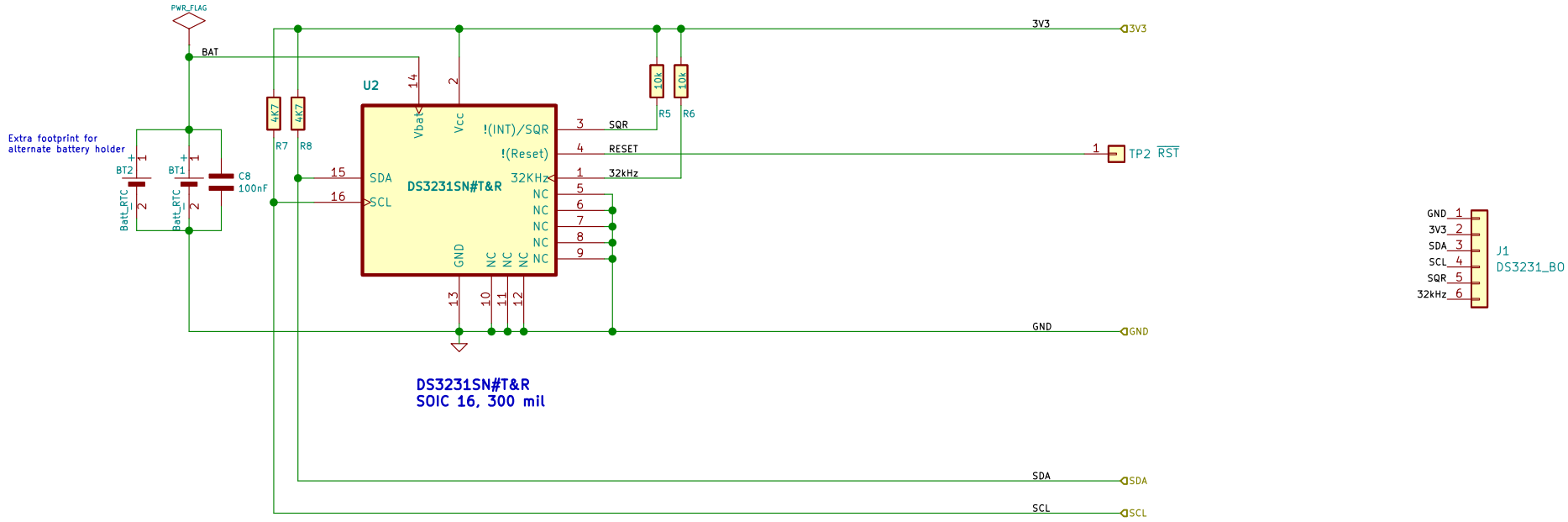

https://github.com/wyolum/ClockIOT

Vayu

Sheet: /rtc_ds3231/
File: rtc_ds3231.sch

Title: vayu02

Size: A4	Date: 2021-10-11	**Rev: rev 2**
KiCad E.D.A. kicad 5.1.12-84ad8e8a8692ubuntu20.04.1		Id: 3/5

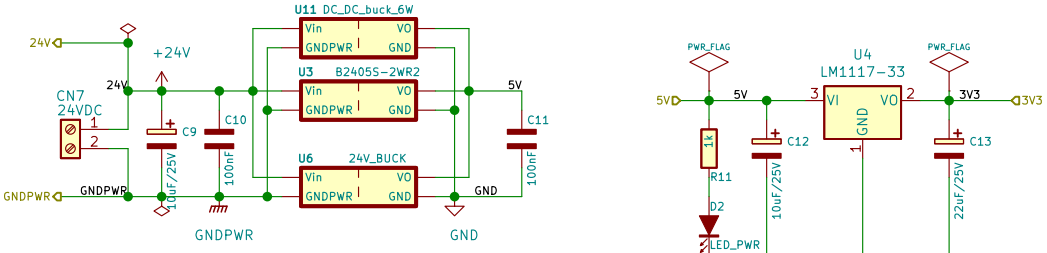

Mornsun B2405S-2WR2 is 2W, 5V, 400mA
could be borderline requirement for ESP32
Try selecting a slightly higher rated device.

U6 footprint is for regular non-isolated buck converter.
To save PCB space, mount this vertically using
an L bracket and use mounting holes. Hook it
up using wires to U3 pads

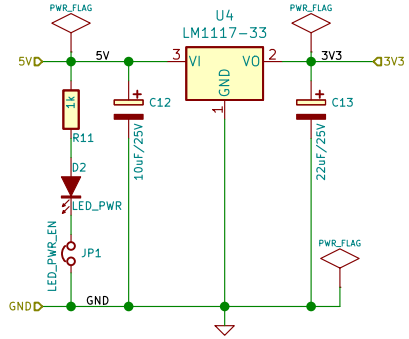

https://github.com/wyolum/ClockIOT

Vayu

Sheet: /esp_pwr_uart/
File: esp_pwr_uart.sch

Title: vayu02

Size: A4	Date: 2021-10-11	**Rev: rev 2**
KiCad E.D.A. kicad 5.1.12-84ad8e8a8692ubuntu20.04.1		Id: 4/5

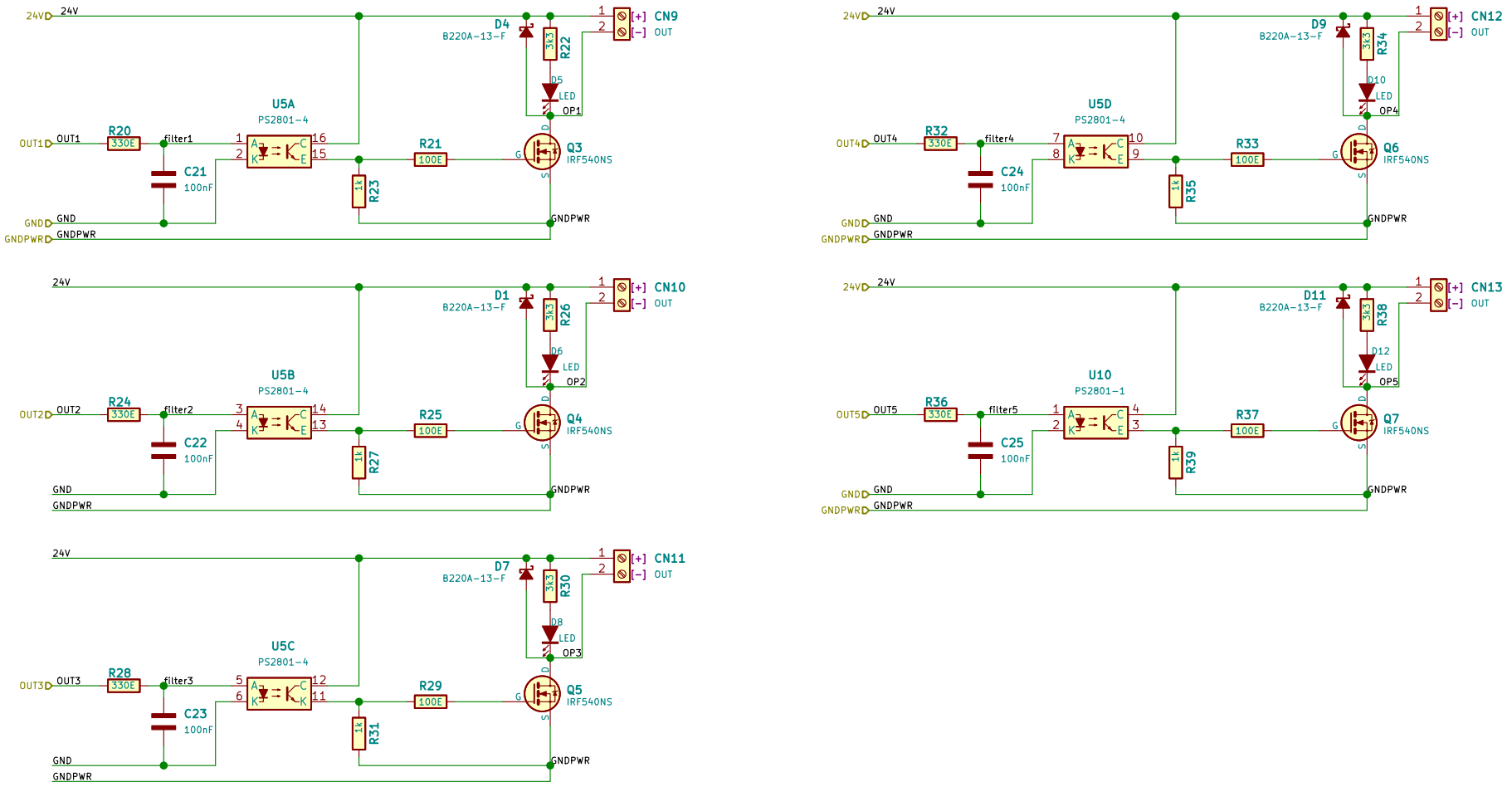

controller for Cafe Veloce eBicycle

Vayu

Sheet: /mosfets/

File: mosfets.sch

Title: vayu02

Size: A4	Date: 2021-10-11	**Rev: rev 2**
KiCad E.D.A. kicad 5.1.12-84ad8e8a8692ubuntu20.04.1		Id: 5/5