Spectre® Circuit Simulator Reference

Product Version 19.1
June 2020

© 2003-2020 All Rights Reserved.

© 2003–2020 Cadence Design Systems, Inc. All rights reserved.

Printed in the United States of America.

Cadence Design Systems, Inc. (Cadence), 2655 Seely Ave., San Jose, CA 95134, USA.

MMSIM contains technology licensed from, and copyrighted by: C. L. Lawson, R. J. Hanson, D. Kincaid, and F. T. Krogh © 1979, J. J. Dongarra, J. Du Croz, S. Hammarling, and R. J. Hanson © 1988, J. J. Dongarra, J. Du Croz, I. S. Duff, and S. Hammarling © 1990; University of Tennessee, Knoxville, TN and Oak Ridge National Laboratory, Oak Ridge, TN © 1992-1996; Brian Paul © 1999-2003; M. G. Johnson, Brisbane, Queensland, Australia © 1994; Kenneth S. Kundert and the University of California, 1111 Franklin St., Oakland, CA 94607-5200 © 1985-1988; Hewlett-Packard Company, 3000 Hanover Street, Palo Alto, CA 94304-1185 USA © 1994, Silicon Graphics Computer Systems, Inc., 1140 E. Arques Ave., Sunnyvale, CA 94085 © 1996-1997, Moscow Center for SPARC Technology, Moscow, Russia © 1997; Regents of the University of California, 1111 Franklin St., Oakland, CA 94607-5200 © 1990-1994, Sun Microsystems, Inc., 4150 Network Circle Santa Clara, CA 95054 USA © 1994-2000, Scriptics Corporation, and other parties © 1998-1999; Aladdin Enterprises, 35 Efal St., Kiryat Arye, Petach Tikva, Israel 49511 © 1999 and Jean-loup Gailly and Mark Adler © 1995-2005; RSA Security, Inc., 174 Middlesex Turnpike Bedford, MA 01730 © 2005.

All rights reserved. Associated third party license terms may be found at <install_dir>/doc/OpenSource/*

Open SystemC, Open SystemC Initiative, OSCI, SystemC, and SystemC Initiative are trademarks or registered trademarks of Open SystemC Initiative, Inc. in the United States and other countries and are used with permission.

Trademarks: Trademarks and service marks of Cadence Design Systems, Inc. contained in this document are attributed to Cadence with the appropriate symbol. For queries regarding Cadence's trademarks, contact the corporate legal department at the address shown above or call 800.862.4522. All other trademarks are the property of their respective holders.

Restricted Permission: This publication is protected by copyright law and international treaties and contains trade secrets and proprietary information owned by Cadence. Unauthorized reproduction or distribution of this publication, or any portion of it, may result in civil and criminal penalties. Except as specified in this permission statement, this publication may not be copied, reproduced, modified, published, uploaded, posted, transmitted, or distributed in any way, without prior written permission from Cadence. Unless otherwise agreed to by Cadence in writing, this statement grants Cadence customers permission to print one (1) hard copy of this publication subject to the following conditions:

1. The publication may be used only in accordance with a written agreement between Cadence and its customer.
2. The publication may not be modified in any way.
3. Any authorized copy of the publication or portion thereof must include all original copyright, trademark, and other proprietary notices and this permission statement.
4. The information contained in this document cannot be used in the development of like products or software, whether for internal or external use, and shall not be used for the benefit of any other party, whether or not for consideration.

Disclaimer: Information in this publication is subject to change without notice and does not represent a commitment on the part of Cadence. Except as may be explicitly set forth in such agreement, Cadence does not make, and expressly disclaims, any representations or warranties as to the completeness, accuracy or usefulness of the information contained in this document. Cadence does not warrant that use of such information will not infringe any third party rights, nor does Cadence assume any liability for damages or costs of any kind that may result from use of such information.

Restricted Rights: Use, duplication, or disclosure by the Government is subject to restrictions as set forth in FAR52.227-14 and DFAR252.227-7013 et seq. or its successor

© 2003-2020 All Rights Reserved.

© 2003-2020
All Rights Reserved.

Contents

Related Documents . . . 12
References . . . 13
Additional Learning Resources . . . 14

1
Introducing the Spectre Circuit Simulator . . . 15
Spectre Circuit Simulator . . . 16
Spectre Circuit Simulator Features . . . 17
Spectre Netlist Format . . . 21
Benefits of Using the Spectre Circuit Simulator . . . 23
Spectre Accelerated Parallel Simulator . . . 25
Benefits of Spectre APS . . . 25
Spectre eXtensive Partitioning Simulator . . . 26
Benefits of Spectre XPS . . . 26

2
Command Options . . . 27
Default Values . . . 41
Default Parameter Values . . . 41

3
Analysis Statements . . . 43
AC Analysis (ac) . . . 45
ACMatch Analysis (acmatch) . . . 51
Alter a Circuit, Component, or Netlist Parameter (alter) . . . 56
Alter Group (altergroup) . . . 58
Check Parameter Values (check) . . . 61
Checklimit Analysis (checklimit) . . . 62
Setting for Simulink-MATLAB co-simulation (cosim) . . . 65
DC Analysis (dc) . . . 66
DC Device Matching Analysis (dcmatch) . . . 72

© 2003-2020 All Rights Reserved.

Envelope Following Analysis (envlp) . . . 78
Harmonic Balance Steady State Analysis (hb) . . . 92
HB AC Analysis (hbac) . . . 113
HB Noise Analysis (hbnoise) . . . 121
HB S-Parameter Analysis (hbsp) . . . 132
HB Stability Analysis (hbstb) . . . 140
HB XF Analysis (hbxf) . . . 144
Circuit Information (info) . . . 151
Loopfinder Analysis (lf) . . . 157
Load Pull Analysis (loadpull) . . . 163
Monte Carlo Analysis (montecarlo) . . . 166
Noise Analysis (noise) . . . 182
Immediate Set Options (options) . . . 188
Periodic AC Analysis (pac) . . . 251
Periodic Noise Analysis (pnoise) . . . 259
Periodic S-Parameter Analysis (psp) . . . 270
Periodic Steady-State Analysis (pss) . . . 278
Periodic STB Analysis (pstb) . . . 304
Periodic Transfer Function Analysis (pxf) . . . 309
PZ Analysis (pz) . . . 318
Quasi-Periodic AC Analysis (qpac) . . . 324
Quasi-Periodic Noise Analysis (qpnoise) . . . 329
Quasi-Periodic S-Parameter Analysis (qpsp) . . . 337
Quasi-Periodic Steady State Analysis (qpss) . . . 345
Quasi-Periodic Transfer Function Analysis (qpxf) . . . 362
Reliability Analysis (reliability) . . . 368
Deferred Set Options (set) . . . 386
Shell Command (shell) . . . 393
S-Parameter Analysis (sp) . . . 394
Stability Analysis (stb) . . . 400
Reliability Stress Analysis (stress) . . . 408
Sweep Analysis (sweep) . . . 413
Time-Domain Reflectometer Analysis (tdr) . . . 418
THERMAL Analysis (thermal) . . . 420
Transient Analysis (tran) . . . 423
Special Current Saving Options (uti) . . . 444

© 2003-2020 All Rights Reserved.

Transfer Function Analysis (xf) 446

4
Other Simulation Topics 453

AHDL Linter Usage (ahdllint) 455
Using analogmodel for Model Passing (analogmodel) 459
Behavioral Source Use Model (bsource) 461
Checkpoint - Restart (checkpoint) 470
Configuring CMI Shared Objects (cmiconfig) 472
Built-in Mathematical and Physical Constants (constants) 474
Convergence Difficulties (convergence) 476
The dcopt command line option (dcopt) 478
encryption (encryption) 479
Expressions (expressions) 482
The fastdc command line option (fastdc) 486
Fault List for Transient Fault Analysis (faults) 487
User Defined Functions (functions) 489
Global Nodes (global) 490
IBIS Component Use Model (ibis) 491
Initial Conditions (ic) 498
The Structural if-statement (if) 499
Include File (include) 501
Spectre Netlist Keywords (keywords) 503
Library - Sectional Include (library) 506
Tips for Reducing Memory Usage (memory) 508
Multi-Technology Simulation Mode (mts) 509
Node Sets (nodeset) 510
Parameter Soft Limits (param_limits) 511
Netlist Parameters (parameters) 514
Parameter Set - Block of Data (paramset) 517
The postlayout command line option (postlayout) 518
Pspice_include File (pspice_include) 519
Tips for Reducing Memory Usage with SpectreRF (rfmemory) 520
Output Selections (save) 525
Savestate - Recover (savestate) 528

© 2003-2020 All Rights Reserved.

Sensitivity Analyses (sens) . . . 532
SpectreRF Summary (spectrerf) . . . 534
Stitch Flow Use Model (stitch) . . . 535
Subcircuit Definitions (subckt) . . . 541
Vec/Vcd/Evcd Digital Stimulus (vector) . . . 546
Verilog-A Usage and Language Summary (veriloga) . . . 549

5
Circuit Checks . . . 561

Dynamic Subckt Instance Activity Check (dyn_activity) . . . 563
Dynamic Active Node Check (dyn_actnode) . . . 565
Dynamic Capacitor Voltage Check (dyn_capv) . . . 567
Dynamic DC Leakage Path Check (dyn_dcpath) . . . 569
Dynamic Delay Check (dyn_delay) . . . 572
Dynamic Diode Voltage Check (dyn_diodev) . . . 575
Dynamic Excessive Element Current Check (dyn_exi) . . . 577
Dynamic Excessive Rise, Fall, Undefined State Time Check (dyn_exrf) . . . 579
Dynamic Floating Node Induced DC Leakage Path Check (dyn_floatdcpath) . . . 582
Dynamic Floating Node Statistical Check (dyn_float_tran_stat) . . . 591
Dynamic Glitch Check (dyn_glitch) . . . 597
Dynamic HighZ Node Check (dyn_highz) . . . 600
Dynamic MOSFET Voltage Check (dyn_mosv) . . . 605
Dynamic Node Capacitance Check (dyn_nodecap) . . . 607
Dynamic Noisy Node Check (dyn_noisynode) . . . 609
Dynamic Pulse Width Check (dyn_pulsewidth) . . . 612
Dynamic Resistor Voltage Check (dyn_resv) . . . 615
Dynamic Setup and Hold Check (dyn_setuphold) . . . 617
Dynamic Statistical HighZ Node Check (dyn_stahighz) . . . 620
Dynamic Subckt Port Voltage/Current Check (dyn_subcktport) . . . 623
Dynamic Subckt Port Power Check (dyn_subcktpwr) . . . 625
Static Capacitor Check (static_capacitor) . . . 628
Static Capacitor Voltage Check (static_capv) . . . 630
Static Coupling Impact Check (static_coupling) . . . 632
Static DC Leakage Path Check (static_dcpath) . . . 635
Static Diode Voltage Check (static_diodev) . . . 637

© 2003-2020 All Rights Reserved.

Static ERC Check (static_erc) . . . 639
Static Highfanout Check (static_highfanout) . . . 642
Static HighZ Node Check (static_highz) . . . 645
Static MOSFET Voltage Check (static_mosv) . . . 648
Static NMOS to vdd count (static_nmos2vdd) . . . 651
Static NMOS Forward Bias Bulk Check (static_nmosb) . . . 652
Static Always Conducting NMOSFET Check (static_nmosvgs) . . . 655
Static PMOS to gnd count (static_pmos2gnd) . . . 657
Static PMOS Forward Bias Bulk Check (static_pmosb) . . . 659
Static Always Conducting PMOSFET Check (static_pmosvgs) . . . 662
Static RCDelay Check (static_rcdelay) . . . 665
Static Resistor Check (static_resistor) . . . 668
Static Resistor Voltage Check (static_resv) . . . 670
Static Subckt Port Voltage Check (static_subcktport) . . . 672
Static Transmission Gate Check (static_tgate) . . . 674
Static Voltage Domain Conflict Check (static_vconflict) . . . 676
Static Voltage Domain Device Check (static_voltdomain) . . . 678

A
References . . . 681

Index . . . 683

© 2003-2020
All Rights Reserved.

© 2003-2020
All Rights Reserved.

Preface

This manual assumes that you are familiar with the development, design, and simulation of integrated circuits and that you have some familiarity with SPICE simulation. It contains information about the Spectre® circuit simulator.

Spectre is an advanced circuit simulator that simulates analog and digital circuits at the differential equation level. The simulator uses improved algorithms that offer increased simulation speed and greatly improved convergence characteristics over SPICE. Besides the basic capabilities, the Spectre circuit simulator provides significant additional capabilities over SPICE. Verilog®-A uses functional description text files (modules) to model the behavior of electrical circuits and other systems. Spectre RF Simulation option adds several new analyses that support the efficient calculation of the operating point, transfer function, noise, and distortion of common RF and communication circuits, such as mixers, oscillators, sample holds, and switched-capacitor filters.

This preface discusses the following topics:

- Related Documents on page -12
- Typographic and Syntax Conventions on page -12
- References on page 13

© 2003-2020 All Rights Reserved.

Related Documents

The following can give you more information about the Spectre circuit simulator and related products:

- To learn more about the equations used in the Spectre circuit simulator, consult the *Spectre Circuit Simulator Components and Device Models Reference* manual.
- The Spectre circuit simulator is often run within the Cadence® analog circuit design environment, under the Cadence® design framework II. To see how the Spectre circuit simulator is run under the analog circuit design environment, read the *Virtuoso ADE Explorer User Guide*.
- For more information about using the Spectre circuit simulator with Verilog-A, see the *Verilog-A Language Reference* manual.
- If you want to see how SpectreRF is run under the analog circuit design environment, read *SpectreRF Simulation Option User Guide*.
- For more information about RF theory, see *SpectreRF Simulation Option Theory*.
- For more information about how you work with the design framework II interface, see *Design Framework II Help*.
- For more information about specific applications of Spectre analyses, see *The Designer's Guide to SPICE & Spectre*[1].

Typographic and Syntax Conventions

This list describes the syntax conventions used for the Spectre circuit simulator.

`literal`	Nonitalic words indicate keywords that you must enter literally. These keywords represent command (function, routine) or option names, file names and paths, and any other sort of type-in commands.

1. Kundert, Kenneth S. *The Designer's Guide to SPICE & Spectre.* Boston: Kluwer Academic Publishers, 1995.

© 2003-2020 All Rights Reserved.

argument	Words in italics indicate user-defined arguments for which you must substitute a name or a value. (The characters before the underscore (_) in the word indicate the data types that this argument can take. Names are case sensitive.
|Vertical bars (OR-bars)	separate possible choices for a single argument. They take precedence over any other character.
[ ]	Brackets denote optional arguments. When used with OR-bars, they enclose a list of choices. You can choose one argument from the list.
{ }	Braces are used with OR-bars and enclose a list of choices. You must choose one argument from the list.
. . .	Three dots (...) indicate that you can repeat the previous argument. If you use them with brackets, you can specify zero or more arguments. If they are used without brackets, you must specify at least one argument, but you can specify more.

Important

The language requires many characters not included in the preceding list. You must enter required characters exactly as shown.

References

Text within brackets ([ ]) are references. See Appendix A, “References” for more information.

© 2003-2020 All Rights Reserved.

Additional Learning Resources

Cadence provides various Rapid Adoption Kits that you can use to learn how to employ Virtuoso applications in your design flows. These kits contain workshop databases, designs, and instructions to run the design flow.

Cadence offers the following training courses on the Spectre circuit simulator:

- Spectre Circuit Simulator
- Spectre Simulations Using Virtuoso ADE

For further information on the training courses available in your region, visit the Cadence Training portal. You can also write to training_enroll@cadence.com.

Note: The links in this section open in a new browser. The course links initially display the requested training information for North America, but if required, you can navigate to the courses available in other regions.

© 2003-2020 All Rights Reserved.

1

Introducing the Spectre Circuit Simulator

This chapter discusses the following topics:

- Spectre Circuit Simulator on page 16
  - Spectre Circuit Simulator Features on page 17
  - Spectre Netlist Format on page 21
  - Benefits of Using the Spectre Circuit Simulator on page 23
- Spectre Accelerated Parallel Simulator on page 25
  - Benefits of Spectre APS on page 25
- Spectre eXtensive Partitioning Simulator on page 26
  - Benefits of Spectre XPS on page 26

© 2003-2020 All Rights Reserved.

Spectre Circuit Simulator

The Spectre® circuit simulator is a modern circuit simulator that provides high-precision SPICE simulation for pre- and post-layout analog RF and mixed-signal designs. Spectre is fully integrated with the Virtuoso custom design platform and provides a comprehensive set of detailed transistor-level analyses in multiple domains for faster convergence on the design goals. The advance architecture of Spectre enables low memory consumption and high-capacity analysis.

In addition to baseline simulation functionalities, Spectre supports the Accelerated Parallel Simulator (APS), and the eXtensive Partitioning Simulator (XPS) technologies that utilize the same Spectre simulation infrastructure — netlist format, analysis and options syntax, device models, output formats, feature functions, and so on.

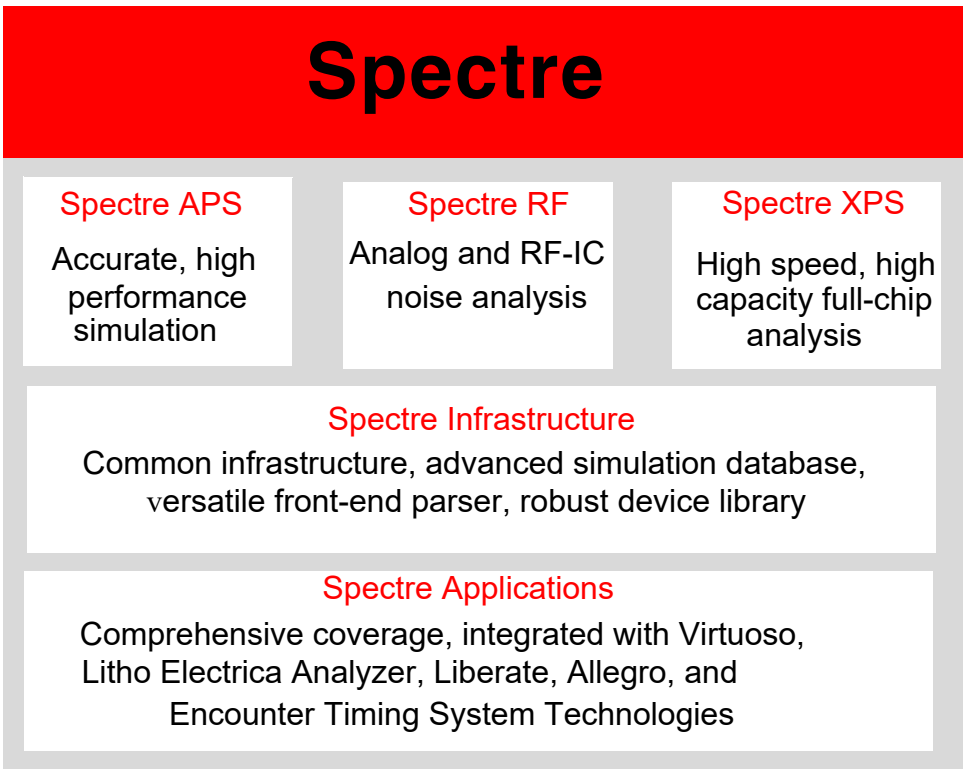

© 2003-2020
All Rights Reserved.

Spectre Circuit Simulator Features

The Spectre circuit simulator provides the following features.

Proven Circuit Simulation Techniques

Spectre uses proprietary techniques — including adaptive time step control, sparse matrix solving, and multi-processing of MOS models — to provide high performance while maintaining sign-off accuracy. It includes native support for both Spectre and SPICE syntax, providing you the flexibility to use the Spectre technology for any design flow without worrying about the design format. In addition, it converges to results that are “silicon-accurate” by modeling extensive physical effects in devices for deep sub-micron processes.

Comprehensive Statistical Analysis

Spectre bridges the gap between manufacturability and time to market nodes by providing a comprehensive set of statistical analysis tools tailored to IC design at advanced process nodes. Advanced Monte Carlo algorithms enable smart selection of process and design parameters to characterize the yield with significantly reduced simulation runs. The DC Match capability efficiently analyzes local process mismatch effects and identifies the yield-limiting devices and parameters. Tight integration between the Spectre Circuit Simulator and the Virtuoso Analog Design Environment offers user-friendly interactive setup and advanced visualization of statistical results.

Transient Noise Analysis

Spectre provides transient noise analysis for accurate calculation of the large signal noise in nonlinear non-periodic circuits. All noise types are supported, including thermal, shot, and flicker.

Built-in Verilog-A and MDL

The Spectre Circuit Simulator offers design abstraction for faster convergence on results, including behavioral modeling capabilities in full compliance with Verilog-A 2.0. The compiled Verilog-A implementation is optimized for compact device models, thus offering comparable performance to built-in device models.

In addition to supporting standard SPICE measurement functions (`.measure`), it offers a measurement description language (MDL) to automate cell and library characterization. Spectre MDL enables the designer to post-process the results and tune the simulator to provide the best performance/accuracy trade-off for a specific measurement.

© 2003-2020 All Rights Reserved.

Advanced Device Modeling and Support

The Spectre Circuit Simulator supports MOS, BJT, specialty transistor models, resistors, capacitors, inductors, transformers and magnetic cores, lossy and lossless transmission lines, independent and controlled voltage and current sources, and Z and S domain sources.

The Spectre Circuit Simulator provides a user-defined compiled model interface (CMI). It allows for the rapid inclusion of user-defined models for a “model once, use everywhere” capability. It offers curve tracer analysis capability for rapid model development and debugging.

The Spectre circuit simulator supports the following models:

- MOSFET models, including the latest versions of BSIM3, BSIM4, PSP, HISIM, MOS9, MOS11, and EKV
- Silicon-on-insulator (SoI), including the latest versions of BTASOI, SSIMSOI BSIMSOI, BSIMSOI PD, and BSIM-IMG
- High-voltage MOSFET models, including the latest versions of HVMOS, LDMOS, and HiSim_HV
- TMI models from TSMC
- Bipolar junction transistor (BJT) models, including latest versions of VBIC, HICUM L0, HICUM L2, Mextram, HBT, and Gummel-Poon models
- GaAS MESFET models, including the latest versions of GaAs, TOM2, TOM3, and Angelov
- Rensselaer Polytechnic Institute (RPI)’s Poly and Amorphous Silicon Thin-Film models
- Diode, JFET, FinFET, and flash cell models
- Verilog-A compact device models
- Specialized reliability models (AgeMOS) for HCI and NBTI analysis

RF Simulation

Spectre RF, an option to the Spectre Circuit Simulator, provides a set of comprehensive RF analyses built on two production-proven simulation engines: harmonic balance and shooting-Newton. Spectre RF supports all industry-standard models. Spectre RF provides the following capabilities:

- Harmonic balance-based analyses, optimized for high dynamic range, high-capacity circuits with distributed components

© 2003-2020 All Rights Reserved.

- Shooting-Newton-based analysis, optimized for strongly non-linear circuits
- Advanced fast envelope analysis supporting all analog and digital modulation techniques
- Rapid IP2 and IP3 calculation based on perturbation technology
- Periodic noise analysis for accurate calculation of noise in nonlinear time variant circuits with detailed analysis options including modulated noise, sampled noise, and jitter
- Full spectrum periodic noise that provides a fast and silicon-accurate Pnoise analysis for circuits with sharp transitions
- Noise and distortion summary to identify the contribution of each device to the total output noise, harmonic, or inter-modulation distortion
- Small signal analysis that includes AC, transfer function, S-Parameters, and stability based on a periodic or quasiperiodic operating point
- Monte Carlo, corner-case, and parametric sweep analysis

Advanced Transmission Line Library

Signal-integrity issues can be difficult and time consuming to identify, analyze, and resolve for high-speed designs. The Spectre RF rftline (RF transmission line) library enables the designer to perform signal-integrity analysis of the design in context of the package and PCB trace.

Spectre rfTlineLib provides a comprehensive set of multi-layer transmission lines and models. Spectre rftline models are based on rigorous 2-D electromagnetic simulations and include state-of-the-art descriptions of dielectric and conductor losses, delivering accurate models that are tightly integrated into Virtuoso ADE. An intuitive and easy-to-use graphical editor provides the ability to accurately define and graphically capture the substrates.

Wireless Analysis

The modern mobile platform with exponentially evolving wireless standards is increasing the complexity of wireless RFIC designs. To meet specification requirements and productivity goals, you must evaluate the system-level performance metrics in an integrated, automated, and easy-to-use simulation-based flow.

Spectre RF wireless analysis feature provides a fully automated flow integrated in Virtuoso ADE, enabling you to apply the standard-compliant modulation sources and measure the output to calculate system-level performance.

© 2003-2020 All Rights Reserved.

The simulation is based on an advanced, accurate, and fast envelope following algorithm in Spectre RF. The wire analysis is designed with the RFIC designer in mind. It provides an automated setup of simulation parameters and standard-specific post-processing, eliminating the hassle and tedious nature of working with changing wireless standard sources. Spectre RF wireless analysis provides a rich set of visualization that includes EVM, BER, and spectrum. A broad set of wireless standards-compliant library sources is supported.

Co-simulation with Simulink

The MathWorks Simulink interface to Spectre Circuit Simulator offers system and circuit designers a unique integrated environment for design and verification. Designers can insert their analog and RF schematics and post-layout netlist directly in the system-level block diagram and run a co-simulation between Simulink and Spectre technologies. Designers can reuse the same Simulink testbench from system-level design to post-layout verification, minimizing unnecessary format conversion while maintaining accuracy throughout the design flow.

Multi-Mode Simulation Toolbox for MATLAB

Multi-Mode Simulation toolbox for MathWorks MATLAB reads PSF and SST2 files directly in MATLAB. You benefit from the set of MATLAB mathematical functions to post-process simulation results from Spectre Circuit Simulator, Spectre APS, Spectre XPS, and AMS Designer. All sweep types are supported in the toolbox, including Monte Carlo and parametric. Special data structures are used to store RF signals and harmonics resulting from PSS and QPSS analysis. Furthermore, the Spectre Simulation toolbox complements the rich MATLAB libraries with communication product-specific post-processing functions such as Fast Fourier Transform, third-order intercept point, and 1dB gain compression point.

Post-layout Simulation

The Spectre Circuit Simulator enables analog and RF block and subsystem post-layout verification with speed near that of pre-layout simulation. An accurate parasitic reduction technique enhances the simulation performance of parasitic-dominant circuits by a significant amount over traditional SPICE-level simulation.

The technology enables designers to trade off accuracy and performance using a simple user-friendly setup.

© 2003-2020 All Rights Reserved.

Spectre Netlist Format

A netlist is an ASCII file that lists the components in a circuit, the nodes that the components are connected to, and the parameter values. The netlist is created in a text editor such as `vi` or `emacs` or from one of the environments that support the Spectre simulator. The Spectre simulator uses a netlist to simulate a circuit.

Sample Netlist

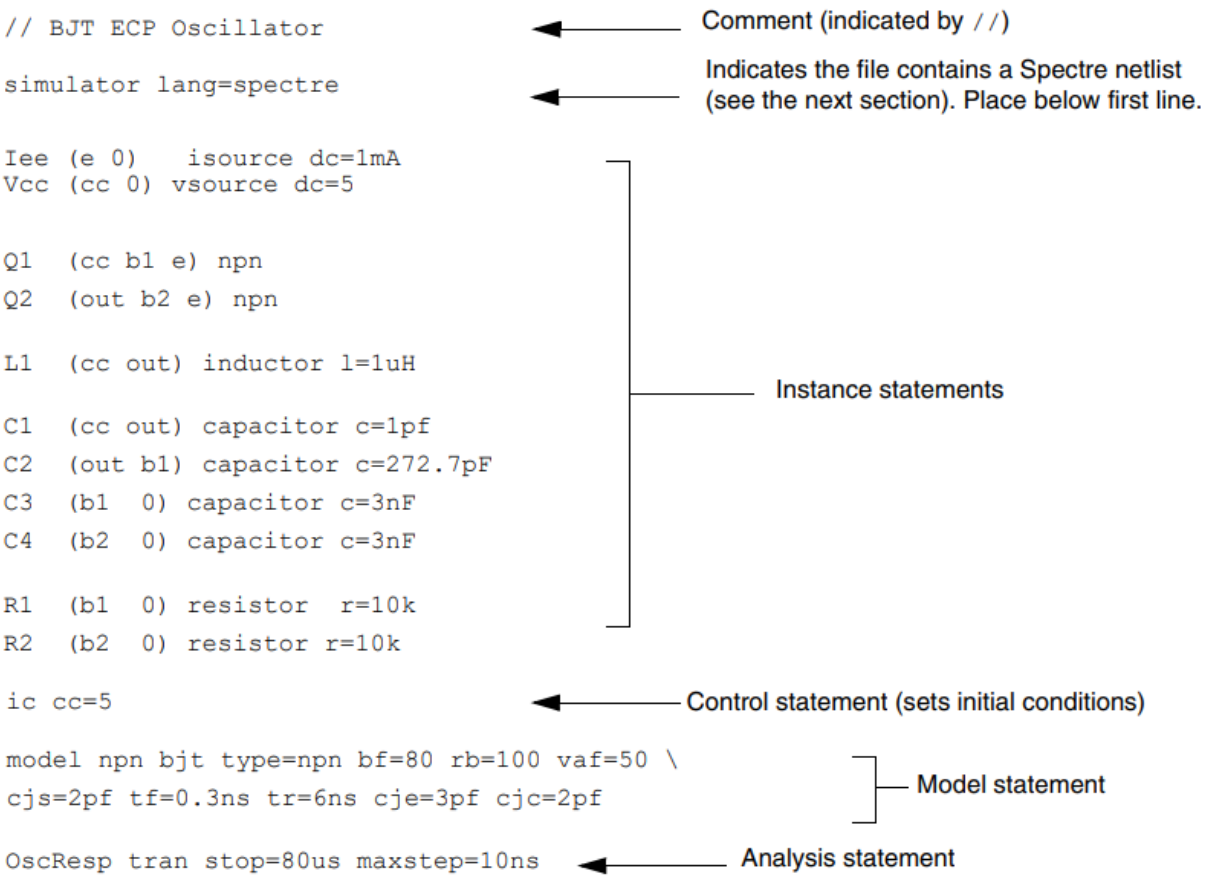

© 2003-2020
All Rights Reserved.

Elements of a Spectre Netlist

The following table briefly explains the components, models, analyses, and control statements in a Spectre netlist.

Netlist Element	Description
Title Line	The first line is taken to be the title. It is used verbatim when labeling output. Any statement you place in the first line is ignored as a comment.
Simulation Language	The second line of the sample netlist indicates that the netlist is in the Spectre Netlist Language, instead of SPICE.
Instance Statements	The next section in the sample netlist consists of instance statements. To specify a single component in a Spectre netlist, you place all the necessary information for the component in a netlist statement. Netlist statements that specify single components are called instance statements. To specify single components within a circuit, you must provide the following information: ■ A unique component name for the component ■ The names of nodes to which the component is connected ■ The master name of the component (identifies the type of component) ■ The parameter values associated with the component
Control Statements	The next section of the sample netlist contains a control statement, which sets initial conditions.

© 2003-2020 All Rights Reserved.

Model Statements

Some components allow you to specify parameters common to many instances using the `model` statement. The only parameters you need to specify in the instance statement are those that are generally unique for a given instance of a component.

You need to provide the following for a model statement:

- The keyword `model` at the beginning of the statement
- A unique name for the model (reference by master names in instance statements)
- The master name of the model (identifies the type of model)
- The parameter values associated with the model

Analysis Statements

The last section of the sample netlist has the analysis statement. An analysis statement has the same syntax as an instance statement, except that the analysis type name replaces the master name. To specify an analysis, you must include the following information in a netlist statement:

- A unique name for the analysis statement
- Possibly a set of node names
- The name of the type of analysis you want
- Any additional parameter values associated with the analysis

Refer to the *Spectre Classic Simulator, Spectre APS, Spectre X, and Spectre XPS User Guide* for detailed information about the elements of the Spectre Netlist.

Benefits of Using the Spectre Circuit Simulator

The Spectre Circuit Simulator provides the following benefits:

- Provides high-performance, high-capacity SPICE-level analog and RF simulation with out-of-the-box tuning for accuracy and faster convergence.

© 2003-2020 All Rights Reserved.

- Facilitates the trade-off between accuracy and performance through user-friendly simulation setup applicable to most complex analog and custom-digital ICs.
- Enables accurate and efficient post-layout simulation.
- Supports out-of-the-box S-Parameter models, enabling simulation of complex n-port devices.
- Delivers signal integrity analysis capability with an advanced transmission line library and graphical editor.
- Provides a platform to measure and analyze system-level performance metric.
- Performs application-specific analysis of RF performance parameters (spectral response, gain compression, intermodulation distortion, impedance matching, stability, and isolation).
- Offers advanced statistical analysis to help design companies improve the manufacturability and yield of ICs at advanced process nodes without sacrificing time to market.
- Delivers fast interactive simulation setup, cross-probing, visualization, and post-processing of simulation results through tight integration with the Virtuoso Analog Design Environment.
- Ensures higher design quality using silicon-accurate, industry-standard, foundry-certified device models shared across the simulation engines.

© 2003-2020 All Rights Reserved.

Spectre Accelerated Parallel Simulator

The Spectre Accelerated Parallel Simulator (Spectre APS) maintains baseline Spectre simulation accuracy. It fully supports all Spectre functionalities and provides advanced performance for the next generation of analog and RF simulations. It delivers significant scalable performance and capacity with accurate results across a broad range of complex analog, RF, and mixed-signal blocks. It also provides accurate results for sub-systems with sizes up to millions of transistors and passive parasitic elements. Spectre APS provides all the transistor-level analysis capabilities available in Spectre Circuit Simulator.

In addition, its proprietary parallel simulation technology delivers scalable multi-core processing capability on modern multi-core compute platforms. Spectre APS:

- Supports all analysis capabilities offered in Spectre Circuit Simulator.
- Offers advanced parallel simulation on a single multi-core compute platform.
- Supports distributed, advanced parallel simulation across a cluster of multi-core computer platforms.
- Enables parasitic stitching and reduction for post-layout design and verification, providing additional performance gain for analog and RF designs dominated by parasitics.
- Supports multi-core harmonic balance, shooting-Newton, and envelope analysis.
- Supports Electromigration and IR drop analysis.
- Supports static and dynamic circuit checks.

Benefits of Spectre APS

Spectre APS provides the following benefits:

- Provides significant single-core performance with an identical use model and full Spectre accuracy for everyday simulation of complex and/or large block designs, leading to faster convergence.
- Enables high-precision simulation for large post-layout analog and RF designs and subsystems dominated by parasitic devices.
- Delivers scalable performance leveraging a single machine or cluster of machines with multi-core architectures, allowing higher levels of analog design integration and verification and a quick turnaround time on simulation.

© 2003-2020 All Rights Reserved.

- Enables fast and accurate analysis of complete transceivers and large post-layout RF IC blocks by significantly improving the performance and capacity of harmonic balance analysis using a multi-core compute platform.

Spectre eXtensive Partitioning Simulator

Spectre® eXtensive Partitioning Simulator (Spectre XPS) is a newer generation transistor-level circuit simulator emphasizing high simulation performance and large simulation capacity, with a vision to fundamentally address the design and verification needs of full-chip low-power designs at advanced process nodes.

Spectre XPS incorporates a completely new circuit partitioning and multi-rate technology, and further extends the simulation performance and simulation capacity to effectively enable full-chip simulation at advanced process nodes. In particular, Spectre XPS supports a variation analysis capability to provide circuit designers practical assessment on design robustness.

The Spectre XPS simulation technology is integrated into the Spectre binary, sharing the same product infrastructure with Spectre and Spectre APS. The Spectre XPS use model is identical to that of Spectre and Spectre APS, with the netlist syntax, device models, analysis setups, and output formats being fully compatible. It provides transient simulation capability for SRAM timing and power analysis, EM/IR analyses with an advanced power network solver, advanced parasitic reduction for faster post-layout simulation, and a set of circuit-checking features.

Benefits of Spectre XPS

Spectre XPS provides the following benefits:

- Provides high performance and capacity pre-and post-layout simulation for design and IP characterization at the block and chip level.
- Provides a comprehensive set of transistor-level electrical rule checks.
- Delivers advanced EM and IR drop analysis for optimal throughput.
- Supports large and complex post-layout designs delivering a significant reduction in simulation runtime compared to the traditional FastSPICE simulator.
- Uses proven Spectre use-model for simplified setting up and post processing of results.
- Fully integrated into the Virtuoso Analog Design Environment (ADE).

© 2003-2020 All Rights Reserved.

2

Command Options

This chapter lists the options you can use with the spectre command and gives a brief description of each. It also discusses the following topics:

Default Values on page 41

Default Parameter Values on page 41

The spectre command takes the following syntax at the command line:

`spectre options` *`inputfile`*

If no options are specified, the Spectre® circuit simulator saves the `.print` file in the current working directory, and saves the `.measure` and `.mt0` files in the `.raw` subdirectory of the netlist directory.

The Spectre circuit simulator reads default values for all the command line arguments marked with a dagger (†) from the UNIX environment variable `%S_DEFAULTS`.

`-help`	Lists the Spectre command options and their descriptions. In addition, lists the available components, analyses, and design checks. You can use `-h` as an abbreviation of `-help`.
`-help` *`name`*	Displays help information for the specified component or analysis name. If name is `all`, the help information for all components and analyses is displayed. You can use `-h` as an abbreviation of `-help`.
`-helpsort` *`name`*	Displays the help information for the specified component or analysis *`name`* and sorts all the parameters alphabetically. You can use `-hs` as an abbreviation of `-helpsort`.

© 2003-2020 All Rights Reserved.

`-helpfull` *`name`*	Displays detailed information for the specified component or analysis *`name`*, including parameter types and range limits. You can use `-hf` as an abbreviation of `-helpfull`.
`-helpsortfull` *`name`*	Displays detailed information for the specified component or analysis *`name`*, including parameter types and range limits. In addition, it sorts all parameters by name. You can use `-hsf` as an abbreviation of `-helpsortfull`.
`-param`	Ignores the file containing the suggested parameter range limits. You can use `-p` as an abbreviation of `-param`.
`+param` *`file`*	Reads the specified *`file`* for suggested parameter range limits. You can use `+p` as an abbreviation of `+param`.
`+paramdefault` *`file`*	Reads the default values of the parameters from the specified *`file`* and applies them. However, if same parameters are specified in the netlist, their values override the default values in the specified file. This option can be set multiple times. Each line in the parameter file should contain three entries: primitive name, parameter name, and value. For example: `tran start 2e-3` The primitive name is limited to analyses primitives, which includes the options analysis. The value should be a constant. Expressions are not allowed.
`=paramdefault` *`file`*	Reads the specified file and ignores all previously specified files. Refer to `+paramedefault` for details.
`-paramdefault`	Disables the reading of any parameter defaults that have been specified.
`-log`	Displays the log information on the standard output (shell) only and does not copy it to a log file. You can use `-l` as an abbreviation of `-log`.
`+log` *`file`*	Displays the log information on the standard output (shell) and copies it to the specified log *`file`*. You can use `+l` as an abbreviation of `+log`.

© 2003-2020 All Rights Reserved.

`=log` *`file`*	Sends the log informaion to the specified *`file`* only and does not display it on the standard output (shell). You can use `=l` as an abbreviation of `=log`.
`-raw` *`raw`*	Saves the simulation results in the specified file or directory named *`raw`*. In *`raw`*, `%C`, which is specified in the directory or file name is replaced by a circuit name. You can use `-r` as an abbreviation of `-raw`.
`-format` *`fmt`*	Generates raw data in the format *`fmt`*. You can use `-f` as an abbreviation of `-format`. Possible values for *`fmt`* are `nutbin`, `nutascii`, `psfbin`, `psfascii`, `psfbinf`, `psfxl`, `sst2`, `fsdb`, `fsdb5`, `wdf`, `uwi`, and `tr0ascii`.
`+rtsf`	Enables the fast waveform viewing mode for psf output. You can use this option only if you have specified the `-f psfbin`, `-f psfbinf` or `-f psfxl` format options.
`-outdir` *`path`*	Changes the default location of Spectre output files. It does not change the location of raw directory if explicitly specified with the `-raw` option, and of files that contain slashes in the name.
`-uwifmt` *`name`*	Specifies a user defined output format. To specify multiple formats use `:` as a delimiter. This option is valid only when waveform format is defined as `uwi` using the `-format` option.
`-uwilib` *`lib`*	Absolute path to the user-defined output format library. This option is used together with `-uwifmt`. Use `:` to specify more than one library.
`+checkpoint`	Turns on the checkpoint capability. You can use `+cp` as an abbreviation of `+checkpoint`.
`-checkpoint`	Turns off the checkpoint capability. You can use `-cp` as an abbreviation of `-checkpoint`.
`+savestate`	Turns on the savestate capability. You may use `+ss` as an abbreviation of `+savestate`.
`-savestate`	Turns off the savestate capability. You may use `-ss` as an abbreviation of `-savestate`.

© 2003-2020 All Rights Reserved.

`-recover`	Does not restart the simulation, even if a checkpoint file exists. You can use `-rec` as an abbreviation of `-recover`.
`+recover[=`*`filename`*`]`	Restarts the simulation from a checkpoint or savestate file. Savestate file will be used if both files exist. You can use `+rec[=`*`filename`*`]` as an abbreviation of `+recover[=`*`filename`*`]`.
`-cols` *N*	Sets screen width (in characters) to *N*. This is needed only if the simulator cannot determine screen width automatically, and if default value of 80 is not acceptable. Spectre cannot determine screen width if output is redirected to a file or a pipe. You can use `-c` as an abbreviation of `-cols`. **Note:** Spectre cannot determine the screen width if the output is redirected to a file or a pipe.
`-colslog` *N*	Sets the log-file width based on the number of characters specified. The default is 80 characters.
`-%`*X*	In quoted strings within the netlist, replaces `%`*X* with nothing where *X* is any uppercase or lowercase letter.
`+%`*X string*	In quoted strings within the netlist, replaces `%`*X* with *string*, where *X* is an uppercase or lowercase letter. You can modify the string by using the `:x` operators.
`+error`	Prints error messages.
`-error`	Does not print error messages.
`+varedefnerror`	Prints error messages if Verilog-A modules are redefined.
`+warn`	Prints warning messages on the screen.
`-warn`	Does not print warning messages on the screen.
`-maxwarns` *N*	Maximum number of times a particular type of warning message will be issued per analysis. You may use `-maxw` as an abbreviation of `-maxwarns`.
`-maxnotes` *N*	Maximum number of times a particular type of notice message will be issued per analysis. You can use `-maxn` as an abbreviation of `-maxnotes`.

© 2003-2020 All Rights Reserved.

`-maxwarnstolog` *N*	Maximum number of times a particular type of warning message will be printed to log file per analysis. You can use `-maxwtl` as an abbreviation of `-maxwarnstolog`.
`-maxnotestolog` *N*	Maximum number of times a particular type of notice message will be printed to log file per analysis. You may use `-maxntl` as an abbreviation of `-maxnotestolog`.
`+note`	Prints notices on the screen.
`-note`	Does not print notices on screen.
`+info`	Prints informational messages.
`-info`	Does not print informational messages.
`+debug`	Prints debugging messages.
`-debug`	Does not print debugging messages.
`+diagnose`	Enables diagnostic mode that provides debugging information to help you resolve simulation issues related to performance or convergence.
`+diagnose_minstep=1e-12`	Prints debugging information if the step size is less than the specified value, while running transient analysis in diagnostic mode.
`+transteps`	Prints all transient steps in diagnostic mode.
`+diagnose_top=`*N*	Prints top N (N>=2) signals that limit step size or cause convergence failures in diagnostic mode.
`+diagnose_fpe`	Identify devices that cause floating point exceptions and print the bias voltages of the devices during dc and transient analyses in diagnostic mode. This option enforces single thread simulation.
`+detect_negcap`	Identify negative capacitance when convergence difficulty happens during transient analysis in diagnostic mode.
`+fix_bad_pivot`	Reorder matrix when a bad pivot is detected during matrix factorization in transient analysis.
`-slave <`*cmd*`>`	Starts the attached simulator using the command *cmd.*

© 2003-2020 All Rights Reserved.

`-slvhost <`*`hostname`*`>`	Runs the attached simulator on machine *`hostname`*. Defaults to local machine.
`-V`	Prints version information.
`-W`	Prints subversion information.
`-cmiversion`	Prints CMI version information.
`-cmiconfig` *`file`*	Reads the specified *`file`* for information to modify the existing CMI configuration.
`-alias <`*`name`*`>`	Gives *`name`* to the license manager as the name of the simulator invoked.
`-E`	Runs the C preprocessor on an input file. In SPICE mode, the first line in the file must be a comment.
`-D<`*`x`*`>`	Defines string *`x`* and runs the C preprocessor.
`-D<`*`x`*`=`*`y`*`>`	Defines string *`x`* to be *`y`* and runs the C preprocessor.
`-U<`*`x`*`>`	Clears string *`x`* and runs the C preprocessor.
`-I<`*`dir`*`>`	Runs the C preprocessor and searches the directory *`dir`* for include files.
`+sensdata <`*`file`*`>`	Sends the sensitivity analyses data to *`file`*.
`+multithread`	Enables the multithreading capability. Spectre automatically detects the number of processors and selects the proper number of threads to use. (See note on the `options` help page about using multithreading). `+mt` can be used as an abbreviation of `+multithread`.
`+multithread=`*`N`*	Enables the multithreading capability. *`N`* is the specified number of threads. A maximum of 64 threads are allowed. `+mt` can be used as an abbreviation of `+multithread`.
`-multithread`	Disables the multithreading capability. By default, multithreading is disabled for Spectre. However, it is enabled for Spectre APS. `-mt` can be used as an abbreviation of `-multithread`.
+mtmode <*`value`*>	Selects the multithreading mode. Possible values are `passive` and `active`.

© 2003-2020 All Rights Reserved.

`-processor`	Sets the CPU affinity of a process similar to Linux `taskset` command. It specifies a numerical list of processors that may contain multiple items, separated by comma, for example, `-processor 0-3,5,7`. Specification of numerical value out of range for current system results in the process termination with *Invalid argument* error message. You can use `-proc` as an abbreviation of `-processor`.
`-interactive`	Runs Spectre in the non-interactive mode, that is, process the input file and then return. You can use `-inter` as an abbreviation of `-interactive`.
`+interactive`	Runs Spectre in the interactive mode based on the type specified. You can use `+inter` as an abbreviation of `+interactive`.
`+interactive=`*`type`*	Runs in the interactive mode of the type specified. You can use `+inter` as an abbreviation of `+interactive`. Possible values for *`type`* are `skill` or `mpsc`.
`+mpssession=`*`sessionName`*	Specifies the *`sessionName`* for running an interactive session using multiprocess SKILL (MPS). This option must be specified when using the `+interactive=mpsc` setting.
`+mpshost=`*`sessionHost`*	Specifies the name of the *`sessionHost`* that will be used for an interactive session using MPS.
`-64`	Runs the 64-bit Spectre binary.
`-32`	Runs the 32-bit Spectre binary.
`-mdlcontrol`	Ignores the MDL control file. You can use `-mdl` as an abbreviation of `-mdlcontrol`.
`+mdlcontrol`	Runs Spectre with the default MDL control file. You can use `-mdl` as an abbreviation of `-mdlcontrol`.
`+mdlcontrole`	Runs Spectre with the default MDL control file. You can use `-mdle` as an abbreviation of `-mdlcontrole`.
`=mdlcontrol` *`file`*	Specifies the location of the MDL control file. You can use `=mdl` as an abbreviation of `=mdlcontrol`.

© 2003-2020 All Rights Reserved.

`=mdlcontrole` *`file`*	Specifies the location of the MDL control file. You can use `=mdle` as an abbreviation of `=mdlcontrole`.
`-checklimitfile` *`file`*	Writes assert violations to *`file`*. In *`file`*, %C is replaced by the circuit name. You can use `-cl` as an abbreviation of `-checklimitfile`.
`-dochecklimit`	Disables the checklimit capability. You can use `-docl` as an abbreviation of `-dochecklimit`.
`+dochecklimit`	Enables the checklimit capability. You can use `+docl` as an abbreviation of `+dochecklimit`.
`-dynchecks`	Disables the dynchecks capability.
`+lqtimeout` *`value`*	Specifies the duration (in seconds) for which Spectre should wait to retrieve a license. When set to `0`, Spectre waits until license is available. You can use `+lqt` as an abbreviation of `+lqtimeout`.
`+lqsleep` *`value`*	Specifies the wait duration between two attempts made by Spectre to check out a license when queuing. Setting the value to a positive number overrides the default wait duration of 30 seconds. You can use `+lqs` as an abbreviation of `+lqsleep`.
`+lqmmtoken`	Enables queuing for the token license capability. When specified, Spectre registers the token request with the license server and waits for authorization. In addition, Spectre ignores all non-token licenses during the wait time since only token licenses are queued.
`+lsuspend`	Enables the license suspend/resume capability. When Spectre receives `SIGTSTP` it checks in all the licenses before it gets suspended. The licenses are checked out again when `SIGCONT` is received. You may use `+lsusp` as an abbreviation of `+lsuspend`.

© 2003-2020 All Rights Reserved.

`+lmode` *value*	Checks out the licenses according to the specified value during initialization phase. Possible values are <*num*> and `RF`. <*num*> is a numeric value greater than 1, which specifies the number of token licenses to be checked out together. For example, to run Spectre APS with the multi-core option, specify `+lmode 4`. `RF` checks out the required licenses for the RF functionality. This value is case insensitive. If a simulation requires more licenses than the value specified using `+lmode`, the additional licenses are checked out after the initialization phase.
`+lorder` *value*	Specifies the license check out order. Values are case insensitive. Possible values are: `PRODUCT`: Spectre attempts to check out the product+options combination licenses only. `MMSIM`: Spectre attempts to check out Virtuoso_Multi_Mode_Simulation (Spectre MMSIM) tokens only. `PRODUCT:MMSIM`: Spectre attempts to check out the product licenses first and then Spectre MMSIM tokens. `MMSIM:PRODUCT`: Spectre attempts to check out the Spectre MMSIM tokens first and then product licenses. Default is `PRODUCT:MMSIM`.
`-ahdlcom` *value*	Determines the Ahdl compiled C flow. Use `0` for fast compilation but potentially slower simulation and `1` for slow compilation but potentially faster simulation. Default value is `1`. This option will be ignored in Spectre APS. You may use `-ac` as an abbreviation of `-ahdlcom`. **Note:** Starting with MMSIM15.1, support for the `-ahdlcom` option has been removed.
`-va,define MACRO[=`*value*`]`	Defines a macro with higher priority than the one defined in Verilog-A files.

© 2003-2020 All Rights Reserved.

`-rf_ahdl_functionality`	Specifies the value for AHDL functionality in RF analysis. Possible values are `141` and `151`. Default value is `151`.
`-ahdllint[=value]`	Enables Verilog-A linter check. Possible values are `no`, `warn`, `static`, `error`, and `force`. The default value is `warn`. This option is not available in Spectre base. It is availabe only in Spectre APS and Spectre XPS.
`-ahdllint_maxwarn[=value]`	Specifies the maximum number of Verilog-A linter warning messages to be reported by the simulator for each message ID. The default value is 5.
`-ahdllint_summary_maxentries[=value]`	Specifies the maximum number of messages to display in dynamic linter summary. The default value is 25.
`-ahdllint_warn_id=`*`value`*	Specifies a message ID and applies the `-ahdllint_maxwarn` option only to the specified ID. This option should always be used with the `ahdllint_maxwarn` option and should be directly specified after it at the command line, otherwise, the option will be ignored.
`-ahdllint_log <`*`file`*`>`	Specifies the file name to which the Verilog-A linter messages need to be written. By default, the Verilog-A linter messages are written to the output log file.
`-ahdllibdir path`	Redirects the library files generated by AHDL to the specified path. If both `-ahdllibddir` and `-outdir` options are specified, the library files generated by AHDL are stored under the path specified by the `-ahdllibdir` option and other output files are stored in the path specified by the `-outdir` option.
`-ahdlsourceramp`	Disables source ramping for Verilog-A models. Source ramping of Verilog-A models is enabled by default because it helps with convergence for most designs. However, in certain corner cases, the default behavior could lead to convergence difficulties, which can be avoided by using this option.

© 2003-2020 All Rights Reserved.

`-ahdlshipdbdir=`*`sharing_path`*	Specifies the sharing directory for Verilog-A library compilation. If this option is specified, the simulator will search for reusable library in the *`sharing_path`*. If library is found, reuse it, otherwise, compile a new library in the local directory.
`-ahdlshipdbmode=read_only`	Indicates whether to create or update the library under *`sharing_path`* specified by `-ahdlshipdbdir`. Possible values are `read_only` and `create_or_update`. `read_only` is the default behavior for `-ahdlshipdbdir` appearing alone. `create_or_update` will copy the newly-built library in local directory to *`sharing_path`* if no any library already or if the library is outdated.
`+errpreset=`*`value`*	Selects a predetermined collection of parameter settings. Possible values are `liberal`, `moderate`, and `conservative`.
`+aps`	Enables Spectre APS mode.
`+aps=`*`value`*	Enables Spectre APS mode and overrides the errpreset value in all transient analyses to apply the specified value. Possible values are `liberal`, `moderate`, or `conservative`.
`++aps`	Enables ++aps mode. Unlike the `+aps` mode, the ++aps mode uses a different time-step control algorithm as compared to Spectre. This results in improved performance, while satisfying error tolerances and constraints.
`++aps=`*`value`*	Enables the ++aps mode and overrides the errpreset value in all transient analyses to apply the specified value. Possible values are `liberal`, `moderate`, or `conservative`.
`+preset=`*`value`*	Enables Spectre X. The most accurate mode is 'cx', and the highest performing mode is 'vx'. Possible values are 'cx', 'ax', 'mx', 'lx', 'vx'.

© 2003-2020 All Rights Reserved.

+postlpreset=*value*	Defines parasitic optimization in Spectre X. If not set, Spectre X enables parasitic optimization if post-layout content is detected. If set, parasitic optimization is enforced. The most accurate parasitic optimization is `cx`, and the highest performing parasitic optimization is `vx`. Parasitic optimization can be disabled with `off`. Possible values are `off, cx, ax, mx, lx, vx`.
-preset_override	Spectre X by default ignores solver options defined in the netlist. The option `-preset_override` forces Spectre X to honor solver options defined in the netlist. The option can also be used to honor individual solver options: `-preset_override=reltol,method`.
+xdp=*value*	Enables Spectre X distributed, multi-processing simulation. Supports RSH/SSH in manual mode: `+xdp=rsh|ssh +hosts="host1:1 host2:3"`. In farm mode, `+xdp` needs to be set and the job distribution system controls the host/core usage.
+hosts"<*hostname>: number of cores*"	Defines the machine specifications that are used for distributed processing. When rsh or ssh are used to spawn sub-processes, the list of machines must be provided using this option. The format of the machine specification is the same for both rsh and ssh and contains a space-delimiter set of machine specifications. Each machine specification contains the name of the machine and number of cores to be used on the machine, separated by a colon (`:`). For example: `+hosts "hostA:4 hostB:4"`. The above setting specifies that four cores can be used for both hostA and hostB to perform simulation.
+ms	Enables Spectre XPS MS mode.
+xps	Enables the Spectre XPS mode.
+xps=s[*value*]	Enables Spectre XPS SPICE accuracy mode. The optional value is the speed setting.
+speed=*value*	The simulation group speed setting. The lower number means conservative setting.

© 2003-2020 All Rights Reserved.

`+query=`*`value`*	Queries the recommended number of threads or the licenses that are required to run the simulation on the current machine or on one with similar configuration. Possible values are `mtinfo`, `meminfo`, `all`, `alllic` and `tokenlic`. `mtinfo` prints the number of threads required to run the simulation. `meminfo` prints an estimate of the memory that will be required to run the simulation. `all` prints the number of threads and the amount of memory required to run the simulation. While `alllic` prints all possible license combinations for the design used for simulation, and `tokenlic` prints the number of MMSIM tokens required. The default value is `tokenlic`.
`+liclog`	Writes the license check-in and check-out information in the log file.
`+disk_check [=`*`value`*`]`	Suspend the simulation when available disk storage is less than `N` bytes. Here, `N` is the value specified using the optional [=*value*] of `+disk_check` or netlist option `disk_check_thresh`. For example, `+disk_check=1e10`.
`-clearcache`	Clears the Spectre cache directory `/home/<`*`username`*`>/.cadence/mmsim`. You can use `-cc` as an abbreviation for -`clearcache`.
`-disableCPP`	Disable CPP preprocesses in situations where Spectre implicitly calls CPP, such as `-I` and `-D`. However, if `-E` is specified, `-disableCPP` has no effect.
`+dcopt[=value]`	Speeds up the simulation in Spectre and Spectre APS for post-layout circuits that consist of a large number of parasitic resistors and capacitors, which require significant time in DC simulation. This option can also be used to solve the non-convergence issues in DC simulations of any other circuit. **Note:** In some cases, the DC solution obtained using the `dcopt` may not be as accurate as the true DC solution.

© 2003-2020 All Rights Reserved.

`+lite`	Enables a lightweight simulation session where most or all of the computationally intensive features (device check asserts, info analysis, current probing, power probing, instance preservation, and so on) are disabled. By default, `++aps` is used as the simulation engine. This can be a useful tool in isolating the computational time used by simulation engine during a simulation performance debugging.
`+config <`*`file`*`>`	Enables the user to append all Spectre commands defined in *`file`* to the netlist. *`file`* may contain one or more Spectre netlist lines. Multiple `+config` on the same Spectre command line are supported. They are incrementally processed.
`=config <`*`file`*`>`	Enables the user to append all Spectre commands defined in *`file`* to the netlist. All `+config` statements on the same Spectre command line are ignored.
`-config`	Disable all `+config` statements on the same Spectre command line. Disables all preceding `=config` statements on the same Spectre command line.
`+pre_config <`*`file`*`>`	Enables the user to prepend all Spectre commands defined in <*`file`*> to the netlist. <*`file`*> may contain one or more Spectre netlist lines. Multiple +pre_config on the same Spectre command line are supported. They are incrementally processed.
`+top <`*`value`*`>`	When specified with a subcircuit name, all elements, models, and so on will be exposed to the top level and the subcircuit will not exist anymore. As a result, instantiation from this subcircuit will be illegal. Instances inside the subcircuit will automatically connect to the instance at the top level if they connect to the same node.
`-hpc`	Disables the hpc option.

If you do not specify an input file, the Spectre simulator reads from standard input. When `+/-` pairs of `spectre` command options are available, the default is the first value given in the previous list. For further information about the percent code options, `+%` and `-%`, see *Chapter 15, "Managing Files***,** in the *Spectre Classic Simulator, Spectre APS, Spectre X, and Spectre XPS User Guide*.

© 2003-2020 All Rights Reserved.

Default Values

The Spectre simulator reads default values for all the command line arguments marked with a dagger (†) from the UNIX environment variable `%S_DEFAULTS`. The name of the simulator as called replaces `%S`. Typically, this name is `spectre`, and the Spectre simulator looks for `spectre_DEFAULTS`. However, the name can be different if you move the executable to a file with a different name or if you call the Spectre simulator through a symbolic or hard link with a different name. This feature lets you set different default values for each name you use to call the Spectre simulator.

If the variable `%S_DEFAULTS` does not exist, `SPECTRE_DEFAULTS` is used instead. The command line arguments always override any specifications from the `options` statement in the circuit file. The `options` statement specifications, in turn, override any specifications in the environment variable.

Default Parameter Values

Many Spectre parameters have default values, and sometimes you will need to know them so you can determine whether they are acceptable for your simulation. You can find the default values for component, analysis, and control statement parameters by consulting the documentation for the statement in Spectre online help (`spectre -h`). Values given for parameters in the online help are the default values.

The following examples show some defaults for different types of parameters from the Spectre online help:

nf=1.0	Forward emission coefficient.
etchc	Narrowing due to etching for capacitances.
homotopy=all	Method used when no convergence occurs on initial attempt of DC analysis. You can specify methods and their orders by specifying a vector setting such as `homotopy=[source ptran gmin]`. Possible values are `none`, `gmin`, `source`, `dptran`, `ptran`, `arclength`, `tranrampup`, and `all`..

For more information about percent codes and colon modifiers, see "Description of Spectre Predefined Percent Codes," "Customizing Percent Codes," and "Creating Filenames from Parts of Input Filenames" in the Spectre Classic Simulator, Spectre APS, Spectre X, and Spectre XPS User Guide.

© 2003-2020 All Rights Reserved.

© 2003-2020 All Rights Reserved.

3

Analysis Statements

This chapter discusses the following topics:

- AC Analysis (ac) on page 45
- ACMatch Analysis (acmatch) on page 51
- Alter a Circuit, Component, or Netlist Parameter (alter) on page 56
- Alter Group (altergroup) on page 58
- Check Parameter Values (check) on page 61
- Checklimit Analysis (checklimit) on page 62
- Setting for Simulink-MATLAB co-simulation (cosim) on page 65
- DC Analysis (dc) on page 66
- DC Device Matching Analysis (dcmatch) on page 72
- Envelope Following Analysis (envlp) on page 78
- Harmonic Balance Steady State Analysis (hb) on page 92
- HB AC Analysis (hbac) on page 113
- HB Noise Analysis (hbnoise) on page 121
- HB S-Parameter Analysis (hbsp) on page 132
- HB Stability Analysis (hbstb) on page 140
- HB XF Analysis (hbxf) on page 144
- Circuit Information (info) on page 151
- Loopfinder Analysis (lf) on page 157
- Load Pull Analysis (loadpull) on page 163
- Monte Carlo Analysis (montecarlo) on page 166

© 2003-2020 All Rights Reserved.

- Noise Analysis (noise) on page 182
- Immediate Set Options (options) on page 188
- Periodic AC Analysis (pac) on page 251
- Periodic Noise Analysis (pnoise) on page 259
- Periodic S-Parameter Analysis (psp) on page 270
- Periodic Steady-State Analysis (pss) on page 278
- Periodic STB Analysis (pstb) on page 304
- Periodic Transfer Function Analysis (pxf) on page 309
- PZ Analysis (pz) on page 318
- Quasi-Periodic AC Analysis (qpac) on page 324
- Quasi-Periodic Noise Analysis (qpnoise) on page 329
- Quasi-Periodic S-Parameter Analysis (qpsp) on page 337
- Quasi-Periodic Steady State Analysis (qpss) on page 345
- Quasi-Periodic Transfer Function Analysis (qpxf) on page 362
- Reliability Analysis (reliability) on page 368
- Deferred Set Options (set) on page 386
- Shell Command (shell) on page 393
- S-Parameter Analysis (sp) on page 394
- Stability Analysis (stb) on page 400
- Sweep Analysis (sweep) on page 413
- Time-Domain Reflectometer Analysis (tdr) on page 418
- Transient Analysis (tran) on page 423
- Special Current Saving Options (uti) on page 444
- Transfer Function Analysis (xf) on page 446

© 2003-2020 All Rights Reserved.

AC Analysis (ac)

Description

AC analysis linearizes the circuit about the DC operating point and computes the response to a given small sinusoidal stimulus.

Spectre can perform AC analysis while sweeping a parameter. The parameter can be frequency, temperature, component instance parameter, component model parameter, or netlist parameter. If changing a parameter affects the DC operating point, the operating point is recomputed at each step. You can sweep the circuit temperature by giving the parameter name as `temp`, without a `dev` or `mod` parameter. In addition, you can sweep a netlist parameter by giving the parameter name without a `dev` or `mod` parameter. After the analysis is complete, the modified parameter returns to its original value.

Definition

```
Name ac parameter=value ...
```

Parameters

1	`prevoppoint=no`	Use the operating point computed in the previous analysis. Possible values are `no` and `yes`.

Sweep interval parameters

2	`start=0`	Start sweep limit.
3	`stop`	Stop sweep limit.
4	`center`	Center of sweep.
5	`span=0`	Sweep limit span.
6	`step`	Step size, linear sweep.
7	`lin=50`	Number of steps, linear sweep.
8	`dec`	Points per decade.
9	`log=50`	Number of steps, log sweep.

© 2003-2020 All Rights Reserved.

10	`values=[...]`	Array of sweep values.
11	`valuesfile`	Name of the file containing the sweep values.

Sweep variable parameters

12	`dev`	Device instance whose parameter value is to be swept.
13	`mod`	Model whose parameter value is to be swept.
14	`param`	Name of parameter to sweep.
15	`freq (Hz)`	Frequency when a parameter other than frequency is being swept.

State-file parameters

16	`readns`	File that contains an estimate of the DC solution (nodeset).
17	`write`	DC operating point output file at the first step of the sweep.
18	`writefinal`	DC operating point output file at the last step of the sweep.

Initial condition parameters

19	`force=none`	The set of initial conditions to use. Possible values are `none`, `node`, `dev`, and `all`.
20	`readforce`	File that contains initial conditions.
21	`skipdc=no`	Skip DC analysis. Possible values are `no` and `yes`.
22	`useprevic=no`	If set to `yes` or `ns`, use the converged initial condition from previous analysis as `ic` or `ns`. Possible values are `no`, `yes`, and `ns`.

© 2003-2020 All Rights Reserved.

Output parameters

23	`save`	Signals to output. Possible values are `all`, `lvl`, `allpub`, `lvlpub`, `selected`, `none`, and `nooutput`.
24	`nestlvl`	Levels of subcircuits to output.
25	`oppoint=no`	Determines whether operating point information should be computed. If yes, where should it be printed (screen or file). Operating point information is not printed if the operating point computed in the previous analysis remains unchanged. Possible values are `no`, `screen`, `logfile`, and `rawfile`.

Convergence parameters

26	`restart=yes`	Restart the DC solution from scratch if any condition has changed. If not, use the previous solution as an initial guess. Possible values are `no` and `yes`.

Annotation parameters

27	`annotate=sweep`	Degree of annotation. Possible values are `no`, `title`, `sweep`, `status`, and `steps`.
28	`title`	Analysis title.
29	`perturbation=linear`	The type of AC analysis. Default is `linear` for normal AC analysis. `im2ds` is for im2 distortion summary and `ds` is for distortion summary. Possible values are `linear`, `ds`, `ip3`, `ip2`, `im2ds`, `multiple_beat`, and `triple_beat`.
30	`flin_out=0 Hz`	Frequency of linear output signal.
31	`fim_out=0 Hz`	Frequency of IM output signal.
32	`out1="NULL"`	Output signal 1.
33	`out2="NULL"`	Output signal 2.

© 2003-2020 All Rights Reserved.

34	`contriblist="NULL"`	Array of device names for distortion summary. When `contriblist[""]`, distortion from each non-linear device is calculated.
35	`maxharm_nonlin=4`	Maximum harmonics of input signal frequency induced by non-linear effect.
36	`rfmag=0`	RF source magnitude.
37	`rfdbm=0`	RF source dBm.
38	`rf1_src="NULL"`	Array of RF1 source names for IP3/IP2/ IM2DistortionSummary.
39	`rf2_src="NULL"`	Array of RF2 source names for IP3/IP2/ IM2DistortionSummary.

You can define sweep limits by specifying the end points or the center value and span of the sweep. Steps can be linear or logarithmic, and you can specify the number of steps or the size of each step. You can specify a step size parameter (`step`, `lin`, `log`, or `dec`) to determine whether the sweep is linear or logarithmic. If you do not specify a step size parameter, the sweep is linear when the ratio of stop to start values is less than 10 and logarithmic when this ratio is 10 or greater. All frequencies are in Hertz.

The small-signal analysis begins by linearizing the circuit about an operating point. By default, this analysis computes the operating point if it is not known, or recomputes it if any significant component or circuit parameter has changed. However, if an operating point was computed during a previous analysis, you can set `prevoppoint=yes` to avoid recomputing it. For example, if `prevoppoint=yes` and the previous analysis was a transient analysis, the operating point is the state of the circuit at the final time point.

Nodesets help find the DC or the initial transient solution. You can specify nodesets in the circuit description file with nodeset statements, or in a separate file using the `readns` parameter. When nodesets are specified, Spectre computes an initial guess of the solution by performing DC analysis while forcing the specified values on to nodes by using a voltage source in series with a resistor whose resistance is `rforce`. Spectre then removes these voltage sources and resistors, and computes the required solution from this initial guess.

Nodesets have two important uses. First, if a circuit has two or more solutions, nodesets can bias the simulator towards computing the required solution. Second, these are a convergence aid. By estimating the solution of the largest possible number of nodes, you might be able to eliminate a convergence problem or significantly speed up convergence.

When you simulate the same circuit multiple times, it is recommended that you use both `write` and `readns` parameters and assign the same file name to both parameters. DC

© 2003-2020 All Rights Reserved.

analysis then converges quickly even if the circuit has changed since the last simulation, and the nodeset file is automatically updated.

During the initial operating point DC analysis, you may force certain circuit variables to use the values given in the `ic` file, `ic` statements, or `ic` parameter on the capacitors and inductors. The `ic` parameter controls the interaction of various methods of setting the force values. The effects of individual settings are as follows:

`force=none`: All initial conditions are ignored.

`force=node`: The `ic` statements are used, and the `ic` parameters on the capacitors and inductors are ignored.

`force=dev`: The `ic` parameters on the capacitors and inductors are used, and the `ic` statements are ignored.

`force=all`: Both `ic` statements and `ic` parameters are used, with the `ic` parameters overriding the `ic` statements.

If you specify an `ic` file with the `readforce` parameter, force values from the file are used and any `ic` statements are ignored.

After you specify the initial conditions, Spectre computes the DC operating point with the specified nodes forced to the given value by using a voltage source in series with a resistor whose resistance is `rforce` (see `options`).

Parameter Index

In the following index, the number corresponding to each parameter name indicates where to find the description of that parameter.

annotate 27	log 9	readforce 20	start 2
center 4	maxharm_nonlin 35	readns 16	step 6
contriblist 34	mod 13	restart 26	stop 3
dec 8	nestlvl 24	rf1_src 38	title 28
dev 12	oppoint 25	rf2_src 39	useprevic 22
fim_out 31	out1 32	rfdbm 37	values 10

© 2003-2020 All Rights Reserved.

flin_out 30
force 19
freq 15
lin 7
out2 33
param 14
perturbation 29
prevoppoint 1
rfmag 36
save 23
skipdc 21
span 5
valuesfile 11
write 17
writefinal 18

© 2003-2020
All Rights Reserved.

ACMatch Analysis (acmatch)

Description

ACMatch analysis linearizes the circuit about the DC operating point and computes the variations of AC responses due to the statistical parameters defined in statistical blocks. Only mismatch parameters are taken into account. For more information on the output generated by the acmatch analysis refer to the *ACMatch Analysis* section in the Spectre Classic Simulator, Spectre APS, Spectre X, and Spectre XPS User Guide.

Definition

```
Name ([node1] [node2]) acmatch parameter=value ...
```

Parameters

Analysis parameters

1	`mth=1e-3`	Threshold of the relative contribution to be exported in output file. The ratio is determined by individual contribution divided by total contribution. Both magnitude and phase are taken into account.
2	`oprobe`	The mismatch variations of the current signal through this component is chosen as the output. It can be one of the following: vsource, inductor, switch, tline, iprobe, ccvs, vcvs, pccvs, and pvcvs.

AC frequency sweeping parameters

3	`start=0`	Start sweep limit.
4	`stop`	Stop sweep limit.
5	`center`	Center of sweep.
6	`span=0`	Sweep limit span.
7	`step`	Step size, linear sweep.

© 2003-2020 All Rights Reserved.

8	`lin=50`	Number of steps, linear sweep.
9	`dec`	Points per decade.
10	`log=50`	Number of steps, log sweep.
11	`values=[...]`	Array of sweep values.
12	`valuesfile`	Name of the file containing the sweep values.

Output parameters

13	`groupby=param`	Specifies the method to group total sigma. Total sigma of each contributor can be grouped either by statistics parameters or by subcircuit instances. Possible values are `param` and `inst`.
14	`where=screen`	Specifies where the results should be printed. Possible values are `screen`, `logfile`, `file`, and `rawfile`.
15	`file`	The name of the file in which the results are printed, if `where=file`.
16	`save`	Signal levels in output. Possible values are `all`, `lvl`, `allpub`, `lvlpub`, `selected`, `none`, and `nooutput`.
17	`oppoint=no`	Determines whether operating point information should be computed. If `yes`, specifies where should it be printed (screen or file). Operating point information is not printed if the operating point computed in the previous analysis remains unchanged. Possible values are `no`, `screen`, `logfile`, and `rawfile`.
18	`write`	DC operating point output file at the first step of the sweep.
19	`writefinal`	DC operating point output file at the last step of the sweep.

Initial condition parameters

20	`readns`	File that contains an estimate of DC solution (nodeset).

© 2003-2020 All Rights Reserved.

21	`prevoppoint=no`	Determines whether to use the operating point computed in the previous analysis. Possible values are `no` and `yes`.
22	`force=none`	The set of initial conditions to use. Possible values are `none`, `node`, `dev`, and `all`.
23	`readforce`	File that contains the initial conditions.
24	`skipdc=no`	Skip DC analysis. Possible values are `no` and `yes`.
25	`useprevic=no`	If set to `yes` or `ns`, use the converged initial condition from the previous analysis as `ic` or `ns`. Possible values are `no`, `yes`, and `ns`.
26	`restart=yes`	Restart the DC solution from scratch if any condition has changed. If not, use the previous solution as an initial guess. Possible values are `no` and `yes`.

Annotation parameters

27	`annotate=sweep`	Degree of annotation. Possible values are `no`, `title`, `sweep`, `status`, and `steps`.
28	`title`	Analysis title.

ACMatch takes each parameter defined in the statistics blocks and applies variation one at a time to find the sensitivity of the output with respect to the parameter. Based on the sensitivities computed by this procedure, the total variation of the output is computed by adding up variation contributions from each parameter, assuming that the parameters are mutually independent.

You can define sweep limits by specifying the end points, or the center value and span of the sweep. Steps can be linear or logarithmic, and you can specify the number of steps or the size of each step. You can specify a step size parameter (`step`, `lin`, `log` or `dec`) to determine whether the sweep is linear or logarithmic. If you do not specify a step size parameter, the sweep is linear when the ratio of stop to start values is less than 10 and logarithmic when this ratio is 10 or greater. All frequencies are in Hertz.

The small-signal analysis begins by linearizing the circuit about an operating point. By default, this analysis computes the operating point, if it is not known, or recomputes it if any significant component or circuit parameter has changed. However, if an operating point was computed during a previous analysis, you can set `prevoppoint=yes` to avoid recomputing it. For example, if `prevoppoint=yes` and the previous analysis was a transient analysis, the operating point is the state of the circuit at the final time point.

© 2003-2020 All Rights Reserved.

Nodesets help find the DC or the initial transient solution. You can specify nodesets in the circuit description file with nodeset statements, or in a separate file using the `readns` parameter. When nodesets are specified, Spectre computes an initial guess of the solution by performing DC analysis while forcing the specified values on to nodes by using a voltage source in series with a resistor whose resistance is `rforce`. Spectre then removes these voltage sources and resistors, and computes the required solution from this initial guess.

Nodesets have two important uses. First, if a circuit has two or more solutions, nodesets can bias the simulator towards computing the required solution. Second, this is a convergence aid. By estimating the solution of the largest possible number of nodes, you might be able to eliminate a convergence problem or significantly speed up convergence.

When you simulate the same circuit multiple times, it is recommended that you use both `write` and `readns` parameters and assign the same file name to both parameters. DC analysis then converges quickly even if the circuit has changed since the last simulation, and the nodeset file is automatically updated.

During the initial operating point DC analysis, you may force some of the circuit variables to the values given in the `ic` file, `ic` statements, or `ic` parameter on the capacitors and inductors. The `ic` parameter controls the interaction of various methods of setting the force values. The effects of individual settings are as follows:

`force=none`: All initial conditions are ignored.

`force=node`: The `ic` statements are used, and the `ic` parameters on the capacitors and inductors are ignored.

`force=dev`: The `ic` parameters on the capacitors and inductors are used, and the `ic` statements are ignored.

`force=all`: Both `ic` statements and `ic` parameters are used, with the `ic` parameters overriding the `ic` statements.

If you specify an `ic` file with the `readforce` parameter, force values from the file are used and any `ic` statements are ignored.

After you specify the initial conditions, Spectre computes the DC operating point with the specified nodes forced to the given value by using a voltage source in series with a resistor whose resistance is `rforce` (see `spectre -h options`).

© 2003-2020 All Rights Reserved.

Parameter Index

In the following index, the number corresponding to each parameter name indicates where to find the description of that parameter.

annotate 27
center 5
dec 9
file 15
force 22
groupby 13
lin 8
log 10
mth 1
oppoint 17
oprobe 2
prevoppoint 21
readforce 23
readns 20
restart 24
save 16
skipdc 23
span 6
start 3
step 7
stop 4
title 27
useprevic 25
values 11
valuesfile 12
where 14
write 18
writefinal 19

© 2003-2020
All Rights Reserved.

Alter a Circuit, Component, or Netlist Parameter (alter)

Description

The `alter` statement changes the value of any modifiable component or netlist parameter for any analyses that follow. The parameter to be altered can be circuit temperature, a device instance parameter, a device model parameter, a netlist parameter, or a subcircuit parameter for a particular subcircuit instance. You can:

- alter the circuit temperature by giving the parameter name as `param=temp` without a `dev`, `mod`, or `sub` parameter.
- alter a top-level netlist parameter by giving the parameter name without a `dev`, `mod`, or `sub` parameter.
- alter a subcircuit parameter for a particular subcircuit instance by specifying the subcircuit instance name with the `sub` parameter, and the subcircuit parameter name with the `param` parameter.
- Each `alter` statement can change only one parameter.

More more information, refer to the *The Alter and Altergroup Statements* section in the *Spectre Classic Simulator, Spectre APS, Spectre X, and Spectre XPS User Guide*.

Definition

```
Name alter parameter=value ...
```

Parameters

1	`mod`	Device model.
2	`dev`	Device instance.
3	`sub`	Subcircuit instance.
4	`param`	Name of parameter to be altered.
5	`value`	New value for parameter.
6	`annotate`	Degree of annotation. Possible values are `no` and `title`.

© 2003-2020 All Rights Reserved.

7	`reelaborate=yes`	Activates the re-elaboration process, which triggers a related expression evaluation throughout the circuit. To speed up the simulation, disable this parameter by setting it to `no` in successive `alter` statements. Possible values are `no` and `yes`.
8	`subckt`	Subcircuit definition.
9	`vary`	Variation parameter name used to set the value for the specified instance, similar to mismatch value. The specified value will be held until changed by any another `vary` parameter or a montecarlo analysis.
10	`justignore`	Ignores dangling instance.
11	`component`	Component instance.

Parameter Index

In the following index, the number corresponding to each parameter name indicates where to find the description of that parameter.

annotate 6	justignore 10	reelaborate 7	value 5
component 11	mod 1	sub 3	vary 9
dev 2	param 4	subckt 8	

© 2003-2020 All Rights Reserved.

Alter Group (altergroup)

Description

The `altergroup` statement changes the values of any modifiable model, instance or netlist parameter for any analyses that follow. Within an alter group, you can specify model statements, instance statements, parameter statements and options statements (only supports temp, tnom, and scale). These statements should be bound within braces. The opening brace is required at the end of the line defining the altergroup. Altergroups cannot be specified within subcircuits. The following statements are not allowed within altergroups (analyses, `export`, `paramset`, `save`, and `sens`).

Within an altergroup, each device (instance or model) is first set to default and then the device parameters are updated. For netlist parameters, the expressions are updated and evaluated.

For subcircuit within altergroup, all instances of the subcircuits are modified when running altergroup. There are strict checks that do not allow changes to topology.

You can include files into the altergroup and can use the `simulator lang=spice` directive. See `spectre -h include` for more information. A model defined in the netlist should have the same model name and primitive type (`bsim2`, `bsim3`, `bjt`) in the altergroup. An instance defined in the netlist, should have the same instance name, terminal connections, and primitive type. For model groups, you can change the number of models in the group. However, you cannot change from a model to a model group and vice versa. See `spectre -h bsim3v3` for details on model groups.

More more information, refer to the *The Alter and Altergroup Statements* section in the *Spectre Classic Simulator, Spectre APS, Spectre X, and Spectre XPS User Guide*.

Definition

```
Name altergroup parameter=value ...
```


© 2003-2020 All Rights Reserved.

Parameters

1	`annotate`	Degree of annotation. Possible values are `no` and `title`.
2	`title`	Altergroup title

Example

```
FastCorner altergroup {
        parameters p2=1 p3=p1+2
        myopt options temp=27
        model myres resistor r1=1e3 af=1
        model mybsim bsim3v3 lmax=p1 lmin=3.5e-7
        m1 (n1 n2 n3 n4) mybsim w=0.3u l=1.2u
}
```

The list of public devices supported by `altergroup` is as follows:

```
ngelov angelov_gan asm_gan assert
bht bht0 bjt bjt301
bjt500 bjt500t bjt503 bjt504
bjt504t bjt505 bjt505t bjt3500
bjt3500t bjtd504 bjtd504t bjtd505
bjtd505t bjtd3500 bjtd3500t bsim1
bsim2 bsim3 bsim3v3 bsim4
bsim6 bsimbulk bsimcmg bsimimg
bsimsoi bsource_resistor capacitor capq
cccs ccvs dcblock dcfeed
delta_gate dio500 diode diode_cmc
ekv ekv3 ekv3_nqs ekv3_r4
ekv3_rf ekv3_s fracpole gaas
hbt hemt hisim2 hisim2_va
hisim_diode isimhv hisim_igbt hisimhmg
hisimhv_va hisimsoi hisimsoi_bt hisimsoi_fb
hvmos igbt0 inductor intcap
isource jfet jfet100 jfet100q
jfetidg jfetidgt jj juncap
juncap200 juncap_eldo ldmos mos1
mos2 mos3 mos30 mos40
mos40t mos705 mos902 mos903
mos903c mos903e mos903t mos1000
mos1100 mos1100e mos1101e mos1101et
mos1102e mos1102et mos2001 mos2001e
mos2001et mos2001t mos2002 mos2002e
mos2002et mos2002t mos3002 mos3100
mos3100t mos11010 mos11010t mos11011
mos11011t mos11020 mos11020t mos11021
mos11021t mosvar msline mutual_inductor
mvsg_gan nodcap ovcheck ovcheck6
pattern pcccs pccvs phy_res
port print psitft psp102
psp102e psp10 psp103t psp1020
```


© 2003-2020 All Rights Reserved.

```
psp1021 pspnqs102e pspnqs103 pspnqs1020
pspnqs1021 pvccs pvcvs r2
r3 rdiff resistor rlck_matrix
spmos ssim_mbc tline tom2
tom3 tom3v1 transformer ucsd_hbt
utsoi2 vbic vccs vcvs
vsource wprobe wsource
```

For detailed information about the supported device models, refer to the *Spectre Circuit Simulator Components and Device Models Reference* manual

The list of public devices not supported by `altergroup` is as follows:

```
a2d  atft  b3soipd  bend
bend2  bit  cktrom  conductor
core  corner  cross  curve
d2a  delay  dielectric  ibis_buffer
iprobe  iswitch jitterevent loc  mos0
mos15  mtline  nport
relay  scccs  sccvs
stackup  step  svccs  svcvs
switch  tee  vswitch  winding
zcccs  zccvs  zvccs  zvcvs
```


© 2003-2020 All Rights Reserved.

Check Parameter Values (check)

Description

The `check` analysis checks the values of component parameters to ensure that they are reasonable. This analysis reduces the cost of data entry errors. Various filters specify which parameters are checked. You can perform checks on input, output, or operating-point parameters. Use this analysis in conjunction with the `+param` command-line argument, which specifies a file that contains component parameter soft limits.

For additional information, refer to *The Check Statement* section in the Spectre Classic Simulator, Spectre APS, Spectre X, and Spectre XPS User Guide.

Definition

```
Name check parameter=value ...
```

Parameters

1	`what=all`	The parameters that should be checked. Possible values are `none`, `inst`, `models`, `input`, `output`, `all`, and `oppoint`.

© 2003-2020 All Rights Reserved.

Checklimit Analysis (checklimit)

Description

A `checklimit` analysis allows the enabling or disabling of individual or group of `asserts` specified in the netlist. Use this analysis in conjunction with the `assert` statements in the netlist to perform checks on parameters of device instances, models, subcircuits or expressions.

Multiple `checklimit` analyses can be defined in the netlist. The enabled checks will be applied to all subsequent analyses until the next `checklimit` analysis is encountered.

For additional information refer to *The Checklimit Statement* in the Spectre Classic Simulator, Spectre APS, Spectre X, and Spectre XPS User Guide.

Definition

```
Name checklimit parameter=value ...
```

Parameters

1	`enable=[...]`	Array of checks to be enabled. The patterns can have wildcard symbols. Default is `all`.
2	`disable=[...]`	Array of checks to be disabled. The patterns can have wildcard symbols. Default is `none`.
3	`severity`	Severity of the checks. Possible values are `none`, `notice`, `warning`, `error`, and `fatal`.
4	`title`	Analysis title.
5	`checkallasserts=yes`	Specifies whether all checks should be enabled or disabled. `checkallasserts=no` disables all checks. Possible values are `no` and `yes`.
6	`asserts=[...]`	Specifies a group of asserts whose parameters (specified using the `param` parameter) and values (specified using the `value` parameter) need to be changed.

© 2003-2020 All Rights Reserved.

7	`param`	Specifies the parameter setting for an individual assert or a group of asserts specified using the `asserts` parameter. Possible values are `max`, `min`, `check_windows`, `maxvio_perinst`, `maxvio_all`, `duration`, `level`, `extreme`, and `skip_dev_inside_subckt`.
8	`value`	Specifies the value of the parameter (specified using the `param` parameter) for the assert (specified using the `asserts` parameter) that needs to be changed.
9	`filter=none`	Set `filter=progressive` to report less assertion violations by omitting less severe repetitions. Set `filter=extreme` to only report top peak/duration/area violations for each assert. Possible values are `none`, `progressive`, and `extreme`.

Boundary parameters

10	`boundary_type=time`	Boundary type. Possible values are `time` and `sweep`.
11	`start`	Start time or sweep boundary of the checks.
12	`stop`	Stop time or sweep boundary of the checks.
13	`check_windows=[...]`	Boundary time or sweep windows of the checks. Array should have an even number of values `[b_begin1 b_end1 b_begin2 b_end2 ...]`.

Parameter Index

In the following index, the number corresponding to each parameter name indicates where to find the description of that parameter:

```
asserts  6          disable  2          severity  3        value  8

boundary_type  10   enable  1           start  11

check_windows  13   filter  9           stop  12
```


© 2003-2020 All Rights Reserved.

```
checkallasserts     param  7            title  4
5
```


© 2003-2020 All Rights Reserved.

Setting for Simulink-MATLAB co-simulation (cosim)

Description

Setting for Simulink-MATLAB co-simulation.

For more information, refer to the *Cosimulation with MATLAB and Simulink* chapter in the Spectre Circuit Simulator and Accelerated Parallel Simulator RF Analysis User Guide.

Definition

```
Name cosim parameter=value ...
```

Parameters

1	`server`	MATLAB/Simulink server name.
2	`port=38520`	Co-simulink listen port.
3	`timeout=60 s`	Socket timeout in seconds. Default is 60s.
4	`inputs=[...]`	Array of input names.
5	`outputs=[...]`	Array of output node names.
6	`design`	MATLAB/Simulink design name. If the design name is specified, MATLAB is launched automatically.
7	`silent=yes`	Launch MATLAB with parameter `-nodesktop`. Possible values are `no` and `yes`.
8	`ratio=0`	Hold time ratio between two sample points. Default is 0.

Parameter Index

In the following index, the number corresponding to each parameter name indicates where to find the description of that parameter:

```
design  6          outputs  5          ratio  8          silent  7

inputs  4          port  2            server  1          timeout  3
```


© 2003-2020 All Rights Reserved.

DC Analysis (dc)

Description

DC analysis finds the DC operating-point or DC transfer curves of the circuit. To generate transfer curves, specify a parameter and a sweep range. The swept parameter can be circuit temperature, a device instance parameter, a device model parameter, a netlist parameter, or a subcircuit parameter for a particular subcircuit instance. You can:

- sweep the circuit temperature by giving the parameter name as `param=temp` without a `dev`, `mod` or `sub` parameter.
- sweep a top-level netlist parameter by giving the parameter name without a `dev`, `mod` or `sub` parameter.
- sweep a subcircuit parameter for a particular subcircuit instance by specifying the subcircuit instance name with the `sub` parameter, and the subcircuit parameter name with the `param` parameter.

After the analysis is complete, the modified parameter returns to its original value.

More additional information, refer to the *DC Analysis* section in the *Spectre Classic Simulator, Spectre APS, Spectre X, and Spectre XPS User Guide*.

Definition

```
Name dc parameter=value ...
```

Parameters

Sweep interval parameters

1	`start=0`	Start sweep limit.
2	`stop`	Stop sweep limit.
3	`center`	Center of sweep.
4	`span=0`	Sweep limit span.
5	`step`	Step size, linear sweep.

© 2003-2020 All Rights Reserved.

6	`lin=50`	Number of steps, linear sweep.
7	`dec`	Points per decade.
8	`log=50`	Number of steps, log sweep.
9	`values=[...]`	Array of sweep values.
10	`valuesfile`	Name of the file containing the sweep values.
11	`hysteresis=no`	Perform DC hysteresis sweep. When set to `yes`, a reverse sweep will automatically be added to the DC sweep. Possible values are `no` and `yes`.

Sweep variable parameters

12	`dev`	Device instance whose parameter value is to be swept.
13	`mod`	Model whose parameter value is to be swept.
14	`param`	Name of parameter to sweep.

State-file parameters

15	`force=none`	Determine whether to force values for DC. Uses the values from the device and node ICs. Possible values are `none`, `node`, `dev`, and `all`.
16	`readns`	File that contains estimate of DC solution (nodeset).
17	`readforce`	File that contains force values.
18	`write`	File to which solution at first step in sweep is written.
19	`writefinal`	File to which solution at last step in sweep is written.
20	`useprevic=no`	If set to `yes` or `ns`, use the converged initial condition from previous analysis as ic or ns. Possible values are `no`, `yes`, and `ns`.

© 2003-2020 All Rights Reserved.

Output parameters

21	`save`	Signals to output. Possible values are `all`, `lvl`, `allpub`, `lvlpub`, `selected`, `none`, and `nooutput`.
22	`nestlvl`	Levels of subcircuits to output.
23	`print=no`	Print node voltages. Possible values are `no` and `yes`.
24	`oppoint=no`	Should operating point information be computed; if yes, where should it be printed (screen or file). Operating point information is not printed if sweep parameter `param` is set. Possible values are `no`, `screen`, `logfile`, and `rawfile`.
25	`check=yes`	Check operating point parameters against soft limits. Possible values are `no` and `yes`.

Convergence parameters

26	`homotopy=all`	Method used when no convergence occurs on initial attempt of DC analysis. You can specify methods and their orders by specifying a vector setting such as `homotopy=[source ptran gmin]`. Possible values are `none`, `gmin`, `source`, `dptran`, `ptran`, `arclength`, `tranrampup`, and `all`.
27	`newton=normal`	You can specify newton methods, such as `newton=none` and `newton=normal`. Possible values are `none` and `normal`.
28	`restart=yes`	Restart from scratch if any condition has changed. If not, use the previous solution as initial guess. Possible values are `no` and `yes`.
29	`maxiters=150`	Maximum number of iterations.
30	`maxsteps=10000`	Maximum number of steps used in homotopy method.

© 2003-2020 All Rights Reserved.

Annotation parameters

31	`annotate=sweep`	Degree of annotation. Possible values are `no`, `title`, `sweep`, `status`, `estimated`, `steps`, `iters`, `detailed`, `rejects`, and `alliters`.
32	`title`	Analysis title.

Emir output parameters

33	`emirformat=none`	Format of the EM/IR database file. Possible values are `none` and `vavo`.
34	`emirfile`	Name of the EM/IR database file. The default is '%A_emir_vavo.db'. The file is printed to a raw directory.
35	`swpuseprevic=yes`	DC sweep uses the solution of previous point as starting point. Possible values are `no`, `yes` and `ns`.

You can define sweep limits by specifying the end points or the center value and span of the sweep. Steps can be linear or logarithmic, and you can specify the number of steps or the size of each step. In addition, you can specify a step size parameter (`step`, `lin`, `log`, or `dec`) and determine whether the sweep is linear or logarithmic. If you do not specify a step size parameter, the sweep is linear when the ratio of stop to start values is less than 10 and logarithmic when this ratio is 10 or greater. If you specify the `oppoint` parameter, Spectre computes and prints the linearized model for each nonlinear component.

Nodesets help find the DC or the initial transient solution. You can specify nodesets in the circuit description file with `nodeset` statements, or in a separate file using the `readns` parameter. When nodesets are specified, Spectre computes an initial guess of the solution by performing DC analysis while forcing the specified values on to nodes by using a voltage source in series with a resistor whose resistance is `rforce`. Spectre then removes these voltage sources and resistors, and computes the required solution from this initial guess.

Nodesets have two important uses. First, if a circuit has two or more solutions, nodesets can bias the simulator towards computing the required solution. Second, this is a convergence aid. By estimating the solution of the largest possible number of nodes, you might be able to eliminate a convergence problem or significantly speed up convergence.

When you simulate the same circuit multiple times, it is recommended that you use both `write` and `readns` parameters and assign the same file name to both parameters. DC

© 2003-2020 All Rights Reserved.

analysis then converges quickly even if the circuit has changed since the last simulation, and the nodeset file is automatically updated.

You can set the `force` parameter and specify the values to force the DC analysis. The values used to force signals are specified by using the `force` file, the `ic` statement, or the `ic` parameter on the capacitors and inductors. The force parameter controls the interaction of various methods of setting the force values. The effects of individual settings are as follows:

`force=none`: All initial conditions are ignored.

`force=node`: The `ic` statements are used, and the `ic` parameter on the capacitors and inductors are ignored.

`force=dev`: The `ic` parameters on the capacitors and inductors are used, and the `ic` statements are ignored.

`force=all`: Both the `ic` statements and the `ic` parameters are used, with the `ic` parameters overriding the `ic` statements.

If you specify a `force` file with the `readforce` parameter, force values read from the file are used, and any `ic` statements are ignored.

After you specify the force conditions, Spectre performs DC analysis with the specified nodes forced to the given value by using a voltage source in series with a resistor whose resistance is `rforce` (see `options`).

Parameter Index

In the following index, the number corresponding to each parameter name indicates where to find the description of that parameter:

annotate 31	hysteresis 11	param 14	stop 2
center 3	lin 6	print 23	swpuseprevic 33
check 25	log 8	readforce 17	title 32
dec 7	maxiters 29	readns 16	useprevic 20
dev 12	maxsteps 30	restart 28	values 9
emirfile 34	mod 13	save 21	valuesfile 10

© 2003-2020 All Rights Reserved.

emirformat 33
force 15
homotopy 26
nestlvl 22
newton 27
oppoint 24
span 4
start 1
step 5
write 18
writefinal 19

© 2003-2020
All Rights Reserved.

DC Device Matching Analysis (dcmatch)

Description

DCMATCH analysis performs device matching analysis on the operating point for a specified output. It computes the deviation in the operating point of the circuit due to processing or environmental variation in modeled devices. If `method=standard` is specified, a set of dcmatch parameters in the model cards is required for each supported device contributing to the deviation. The analysis applies device matching models to construct equivalent mismatch current sources to all the devices that are modeled. These current sources are assumed to have zero mean and certain variance. The variance of the current sources is computed according to device matching models. Next, the 3-sigma variance of DC voltages or currents (due to the mismatch current sources) is computed at the specified outputs. The simulation result displays the devices rank ordered by their contribution to the outputs. In addition, for MOSFET devices, it displays threshold voltage mismatch, current factor mismatch, gate voltage mismatch, and drain current mismatch. For bipolar devices, it displays base-emitter junction voltage mismatch. For resistors, it displays resistor mismatches.

The analysis replaces multiple simulation runs that determine changes in accuracy with any changes in size. It automatically identifies the set of critical matched components during circuit design. For example, when there are matched pairs in the circuit, the contribution of two matched transistors is equal in magnitude but opposite in sign. Typical usage is to simulate the output offset voltage of operational amplifiers, estimate the variation in bandgap voltages, and predict the accuracy of current steering DACS.

For `method=standard`, DCMATCH analysis can be applied to following devices: BSIM3V3, BSIM4, BSIMSOI, EKV, PSP102, PSP103, BJT, VBIC, BHT, RESISTOR, PHY_RES, R3, and resistor-type bsource. If `method=statistics` is specified, a statistics block is required to list the parameters that are considered as randomly varying. By default, all statistics parameters found in the statistics block are considered in computation, unless the option `variations` is explicitly specified. Device matching models are not used in this case and dcmatch model parameters are not required.

More more information, refer to the *DCMatch Analysis* section in the *Spectre Classic Simulator, Spectre APS, Spectre X, and Spectre XPS User Guide*.

Definition

```
Name ... dcmatch parameter=value ...
```


© 2003-2020 All Rights Reserved.

Parameters

1	`mth`	Relative mismatch contribution threshold value.
2	`where=screen`	Where DC-Mismatch analysis results should be printed. Possible values are `screen`, `logfile`, `file`, and `rawfile`.
3	`file`	File name for results to be printed if `where=file` is used.

Probe parameters

4	`oprobe`	Compute mismatch at the output defined by this component.

Port parameters

5	`portv`	Voltage across this probe port is output of the analysis.
6	`porti`	Current through this probe port is output of the analysis.

Sweep interval parameters

7	`start=0`	Start sweep limit.
8	`stop`	Stop sweep limit.
9	`center`	Center of sweep.
10	`span=0`	Sweep limit span.
11	`step`	Step size, linear sweep.
12	`lin=50`	Number of steps, linear sweep.
13	`dec`	Points per decade.
14	`log=50`	Number of steps, log sweep.
15	`values=[...]`	Array of sweep values.

© 2003-2020 All Rights Reserved.

16	`valuesfile`	Name of the file containing the sweep values.

Sweep variable parameters

17	`dev`	Device instance whose parameter value is to be swept.
18	`mod`	Model whose parameter value is to be swept.
19	`param`	Name of parameter to sweep.

State-file parameters

20	`readns`	File that contains an estimate of the DC solution (nodeset).
21	`useprevic=no`	If set to `yes` or `ns`, use the converged initial condition from previous analysis as ic or ns. Possible values are `no`, `yes`, and `ns`.

Output parameters

22	`save`	Signals to output. Possible values are `all`, `lvl`, `allpub`, `lvlpub`, `selected`, `none`, and `nooutput`.
23	`nestlvl`	Levels of subcircuits to output.
24	`oppoint=no`	Determines whether the operating point information should be computed. If yes, where should it be printed (screen or file). Operating point information is not printed in case of the following conditions: (1) operating point is computed in the previous analysis and is unchanged (2) sweep parameter `param` is set. Possible values are `no`, `screen`, `logfile`, and `rawfile`.

© 2003-2020 All Rights Reserved.

Convergence parameters

25	`prevoppoint=no`	Use operating point computed on the previous analysis. Possible values are `no` and `yes`.
26	`restart=yes`	Restart the DC solution from scratch if any condition has changed. If not, use the previous solution as initial guess. Possible values are `no` and `yes`.

Annotation parameters

27	`annotate=sweep`	Degree of annotation. Possible values are `no`, `title`, `sweep`, `status`, and `steps`.
28	`title`	Analysis title.

Miscellaneous parameters

29	`version=0`	Use BSIM short-channel mismatch equation for BSIM3 and BSIM4 devices, if the value is set to `1` and `3`. If set to `0` and `2`, do not use BSIM short-channel mismatch equation. Values `2` and `3` are compatible with Monte Carlo analysis while `0` and `1` are not. This option works only when `method=standard`. Possible values are `0` to `3`.
303	`method=standard`	Proceed with standard device mismatch models, or utilize the parameters defined in statistics blocks to compute output variation. Possible values are `standard` and `statistics`.
31	`nsigma=3`	Specifies the variation of each statistics parameter (in the number of sigma). This option works only if `method=statistics`.
32	`variations=all`	Selects the type of statistical parameters that are involved in `dcmatch`. The option is valid only if `method=statistics`. Possible values are `process`, `mismatch`, and `all`.

© 2003-2020 All Rights Reserved.

33	deltascale=1	Scaling factor of offset applied to mismatch and process parameters.

The dcmatch analysis will find a DC operating point first. If the DC analysis fails, the dcmatch analysis also fails. The parameter mth is a threshold value relative to maximum contribution. Any device contribution less than (mth * maximum) is not reported, where maximum is the maximum contribution among all the devices of a given type.

Examples:

```
dcmm1 dcmatch mth=1e-3 oprobe=vd porti=1
dcmm2 dcmatch mth=1e-3 oprobe=r3 portv=1
dcmm3 n1 n2 dcmatch mth=1e-3 where=rawfile stats=yes
dcmm4 n3 0 dcmatch mth=1e-3 where=file file="%C:r.info.what"
sweep1 sweep dev=mp6 param=w start=80e-6 stop=90e-6 step=2e-6 {
dcmm5 dcmatch oprobe=vd mth=1e-3 where=rawfile }
dcmm6 n3 0 dcmatch mth=0.01 dev=x1.mp2 param=w start=15e-6 stop=20e-6 step=1e-6
dcmm7 n3 0 dcmatch mth=0.01 param=temp start=25 stop=100 step=25
```

Note: porti allows you to select a current associated with a specific device given in oprobe as an output. All types of devices are supported for oprobe. For inductor, vsource, switch, tline, controlled voltage source, iprobe, etc., porti can only be set to one, because these devices are two-terminal devices (one port); and for tline porti can be set to one or two, because it is a four-terminal device (two ports).

Parameter Index

In the following index, the number corresponding to each parameter name indicates where to find the description of that parameter:

annotate 27	mod 18	prevoppoint 25	useprevic 21
center 9	mth 1	readns 20	values 15
dec 13	nestlvl 23	restart 26	valuesfile 16
deltascale 33	nsigma 31	save 22	variations 32
dev 17	oppoint 24	span 10	version 29
file 3	oprobe 4	start 7	where 2

© 2003-2020 All Rights Reserved.

```
lin  12            param  19          stop  8

log  14            porti  6p          step  11

method  30         ortv  5            title  28
```


© 2003-2020 All Rights Reserved.

Envelope Following Analysis (envlp)

Description

This analysis computes the envelope response of a circuit based on the specified analysis `clockname`, `period`, or `fund`. If `clockname` is specified, the simulator automatically determines the clock period by looking through all the sources with the specified name. The envelope response is computed over the interval from `start` to `stop`. If the interval is not a multiple of the clock period, it is rounded off to the nearest multiple before the stop time. The initial condition is taken to be the DC steady-state solution, if not given.

Envelope following analysis is most efficient for circuits where the modulation bandwidth is orders of magnitude lower than the clock frequency. This is typically the case, for example, in circuits where the clock is the only fast varying signal and other input signals have a spectrum whose frequency range is orders of magnitude lower than the clock frequency. The down conversion of two closely placed frequencies can also generate a slow-varying modulation envelope.

Envelope following analysis is capable of handling both autonomous (non-driven) and driven (non-autonomous) circuits. Autonomous circuits are time-invariant circuits that have time-varying responses. Therefore, autonomous circuits generate non-constant waveforms even though they are not driven by a time-varying stimulus. Driven circuits require time-varying stimulus to generate a time-varying response. The most common example of an autonomous circuit is an oscillator.

When applied to autonomous circuits, envelope following analysis requires you to specify a pair of nodes, `p` and `n`. In fact, this is how envelope following analysis determines whether it is being applied to an autonomous or a driven circuit. If the pair of nodes is supplied, envelope assumes the circuit is autonomous; if not, the circuit is assumed to be driven.

The analysis generates two types of output files, a voltage versus time (td) file and an amplitude/phase versus time (fd) file for each of the specified harmonics of the clock fundamental.

Fast mode envelope analysis is used to simulate RF power amplifier (PA) with I/Q orthogonal modulation. Like normal envelope analysis, the time scale difference between I/Q signals and carrier is large. Fast envelope analysis has larger speed up performance than normal envelope. Fast envelope has two modes, level1 and level2. Level1 is used to simulate the circuit without memory effect. Level2 has been discontinued. If selected, the simulator will automatically switch to Level1. If the circuit has strong nonlinear-memory effect, fast envelope can be inaccurate. In this situation, the only accurate way is to use regular envelope analysis. Fast envelope only outputs the fd result of specified nodes (assigned by the parameter `output`) at harmonic 1 of carrier.

© 2003-2020 All Rights Reserved.

Fast mode envelope analysis is not supported in the Shooting engine; its parameters apply only to the harmonic balance engine.

For information on how to run Envelope Analysis from ADE, see *Envelope (ENVLP) Analysis* chapter in the *Spectre Circuit Simulator and Accelerated Parallel Simulator RF Analysis User Guide*.

Definition

```
Name  [p]  [n] envlp parameter=value ...
```

Parameters

Envelope fundamental parameters

1	`clockname`	Name of the clock fundamental.
2	`modulationbw (Hz)`	Modulation bandwidth.
3	`resolutionbw (Hz)`	Resolution bandwidth; if set, overwrites the stoptime to be at least `1/resolutionbw`.

Simulation interval parameters

4	`stop (s)`	Stop time.
5	`start=0 s`	Start time.
6	`tstab=0 s`	Initial stabilization time; can be used to change the phase that envelope starts shooting.
7	`period (s)`	Period of the clock fundamental; if set, `clockname` can be ignored. It is the estimated period for autonomous circuits.
8	`fund (Hz)`	Alternative to `period`. Frequency of the clock fundamental frequency.
9	`outputstart=start s`	Output is saved only after this time is reached.

© 2003-2020 All Rights Reserved.

Time-step parameters

10	`maxstep (s)`	Maximum time step for inner transient integration. Default is derived from `errpreset`.
11	`envmaxstep (s)`	Maximum outer envelope step size. Default is derived from `errpreset`.
12	`fixstepsize=no`	Use this option to fix envelope step size for speeding up envelope analysis. Possible values are `no` and `yes`.
13	`stepsize=4`	The number of cycles skipped between two steps when `fixstepsize` is `yes`. The time interval between the two steps will be `(stepsize+1)*Tc`, where `Tc` is the clock period. For shooting, autonomous, and fm envelope, it is rounded off to an integer.
14	`stepperiod`	The interval (in seconds of envelope following time) between two steps when `fixstepsize` is `yes`. Should be greater than period of clock. For autonomous FM or shooting envelope, it is rounded off to the nearest integer multiple of clock period.

Initial-condition parameters

15	`ic=all`	What should be used to set initial condition. Possible values are `dc`, `node`, `dev`, and `all`.
16	`skipdc=no`	If set to `yes`, there will be no DC analysis for initial transient. Possible values are `no` and `yes`.
17	`readic`	File that contains initial transient condition.
18	`useprevic=no`	If set to `yes` or `ns`, use the converged initial condition from previous analysis as ic or ns. Possible values are `no`, `yes` and `ns`.

Convergence parameters

19	`readns`	File that contains estimate of initial DC solution.
20	`cmin=0 F`	Minimum capacitance from each node to ground.

© 2003-2020 All Rights Reserved.

State-file parameters

21	`write`	File to which initial transient solution is to be written.
22	`writefinal`	File to which final transient solution is to be written.
23	`swapfile`	Temporary file that holds the matrix information used by Newton's method. It tells Spectre to use a regular file, rather than virtual memory, to hold the matrix information. Use this option if Spectre does not have enough memory to complete this analysis, This parameter is now valid only for shooting. It does not apply to harmonic balance.

Envelope Integration method parameters

24	`envmethod=gear2only`	Envelope Integration method. Possible values are `euler`, `trap`, `traponly`, `gear2`, `gear2only`, and `trapgear2`.

Integration method parameters

25	`method=gear2only`	Inner transient integration method. Possible values are `euler`, `trap`, `traponly`, `gear2`, `gear2only`, and `trapgear2`.
26	`oscic=default`	Oscillator IC method. It determines how the starting values for the oscillator are determined. Possible values are `default` and `lin`.

Accuracy parameters

27	`errpreset=moderate`	Selects a reasonable collection of parameter settings. Possible values are `liberal`, `moderate`, and `conservative`.

© 2003-2020 All Rights Reserved.

28	`relref`	Reference used for the relative convergence criteria. Default is derived from `errpreset`. Possible values are `pointlocal`, `alllocal`, `sigglobal`, and `allglobal`.
29	`lteratio`	Ratio used to compute LTE tolerances from Newton tolerance. Default is derived from `errpreset`.
30	`smoothcheck=yes`	When set to `no`, the smoothness of the envelope is not checked. The skip cycles are as many as possible. If `fixstepsize=yes`, `smoothcheck` is set to `no` automatically. Possible values are `no` and `yes`.
31	`itres=1e-2`	Relative tolerance for linear solver.
32	`inexactNewton=no`	Inexact Newton method. Possible values are `no` and `yes`.
33	`steadyratio`	Ratio used to compute steady-state tolerances from LTE tolerance. Default is derived from `errpreset`.
34	`envlteratio`	Ratio used to compute envelope LTE tolerances. Default is derived from `errpreset`.

Annotation parameters

35	`annotate=sweep`	Degree of annotation. Possible values are `no`, `title`, `sweep`, `status`, and `steps`.
36	`title`	Analysis title.

Output parameters

37	`harms`	If `harmonicbalance` is set to `no`, it is the number of clock harmonics to output and the default value is `1`. If `harmonicbalance` is set to `yes`, it is the `maxharm` of the clock fundamental and the default value is `3`.
38	`harmsvec=[...]`	Array of desired output clock harmonics. Alternative form of `harms` that allows selection of specific harmonics. For multi-carrier envelope, each group of elements with size equal to that of `funds` is a selection of specific harmonic combinations of fundamental frequencies.

© 2003-2020 All Rights Reserved.

39	`outputtype=both`	Output type. Possible values are `both`, `envelope` and `spectrum`.
40	`save`	Signals to output. Possible values are `all`, `lvl`, `allpub`, `lvlpub`, `selected`, `none`, and `nooutput`.
41	`nestlvl`	Levels of subcircuits to output.
42	`compression=no`	Perform data compression on output. Possible values are `no` and `yes`.
43	`strobeperiod (s)`	The output strobe interval (in seconds) of envelope following time. For Shooting Envelope, the actual strobe interval is rounded off to an integer multiple of the clock period.
44	`transtrobeperiod (s)`	The output strobe interval (in seconds) of envelope time. The value of the parameter must be less than the cycle period. Those strobe timepoints in all cycles will output when the parameter is working. It is valid for shooting and HB.

Newton parameters

45	`maxiters=5`	Maximum number of Newton iterations per transient integration time step.
46	`envmaxiters`	Maximum number of Newton iterations per envelope step. For time domain Shooting envelope, the default is 3. For Harmonic Balance Envelope, the default is 40.
47	`restart=no`	Restart the DC solution from scratch if any condition has changed. If not, use the previous solution as initial guess. Possible values are `no` and `yes`.

Circuit age

48	`circuitage (Years)`	Stress time. Age of the circuit used to simulate hot-electron degradation of MOSFET and BSIM circuits.

© 2003-2020 All Rights Reserved.

49	`fmspeedup=0`	The level to speed up the envelope analysis for frequency modulated signal. Default is `0` for standard envelope following and `1` for fmmod sources speed up.
50	`saveinit=no`	If set, the waveforms for the initial transient (tstab) before envelope are saved. Possible values are `no` and `yes`.

Fast envelope parameters

51	`fastmode=off`	This parameter controls the accuracy of envelope analysis. When `fastmode=off`, a rigorous transistor-level envelope algorithm is used. When `fastmode=level1`, a faster fast envelope algorithm is used. Fast envelope is more efficient but its usefulness is limited to (near)-memoryless systems. The `level2` algorithm is obsolete and is automatically switched to level1, when set. Possible values are `off`, `level1`, and `level2`.
52	`fastmethod=passband`	This parameter applies only in fast envelope mode. The `passband` method models only magnitude-dependent (AM-AM and AM-PM) effects. The `baseband` method includes both magnitude- and phase-dependent (PM-AM and PM-PM) effects. Use the `passband` method when you model PAs. Use the `baseband` method when the circuit includes transistor-level modulators, demodulators, and whenever the output depends both on the magnitude and phase of the input signal. Possible values are `passband` and `baseband`.
53	`writeenv`	The file to which fast mode envelope data is written. It can be reused by `readenv` if the circuit remains unchanged, except for the decrease in `srci` or `srcq` scale. Can only be used in fast envelope.
54	`readenv`	File from which fast mode envelope data is read. It can be used only if the circuit remains unchanged after the file is created, except for the decrease in `srci` or `srcq` scale. Can only be used in fast envelope.

© 2003-2020 All Rights Reserved.

55	`srci=[...]`	I branch baseband modulation source, whose signal corresponds to the real part of baseband signal. If two sources are assigned, it means that the inputs are differential signals and the first source is positive. Only the pwl type of source is supported. Can only be used in fast envelope.
56	`srcq=[...]`	Q branch baseband modulation source, whose signal corresponds to the imaginary part of baseband signal. If two sources are assigned, it means that the inputs are differential signals and the first source is positive. Only the pwl type of source is supported and can be used only in fast envelope.
57	`srcw=[...]`	Wireless source. Can be used only in fast envlp currently.
58	`sweepmethod=coarse`	This parameter controls the sweep algorithm during the fast envelope circuit characterization. When sweepmethod is `coarse`, `fine`, or `userdefined`, it uses a fixed number of sweep points. When sweepmethod is `adaptive`, it determines the number of sweep points automatically. `coarse` uses 7 magnitude points (plus 12 phase points when fastmethod=baseband); `fine` uses 10 magnitude points (plus 16 phase points when fastmethod=baseband); when `sweepmethod=userdefined`, use the `sweepnum` parameter to define the grid. Possible values are `coarse`, `fine`, `userdefined`, and `adaptive`.

© 2003-2020 All Rights Reserved.

59	`sweepnum=[...]`	This parameter controls the number of sweep points for fast envelope characterization when `sweepmethod=userdefined`. When `fastmethod=passband`, `sweepnum` is a one-element integer array which sets the number of magnitude sweep points. When `fastmethod=baseband`, it is a two-element integer array which sets the number of magnitude and phase sweep points. In passband mode, default `sweepnum`=[7]. In baseband mode, default `sweepnum=[7 12]`. In most cases, default values are adequate to capture the main and adjacent channel power accurately. Nevertheless, it is recommended to increase `sweepnum` gradually to ensure that the results do not change. A reasonable strategy is to start at `sweepnum=[7 12]` and increase to [10 16] until results converge. The upper limit of the magnitude and phase sweep points is [49 48].
60	`output=[...]`	Fast mode envelope output nodes. Fast mode envelope only generates fd result (complex solution of a certain harmonic versus time) and can be used only in fast envelope.
61	`outputharmonic=1`	Output harmonic in fast mode envelope analysis.
62	`outputallharms=no`	By default, fast mode envlp analysis outputs only one harmonic, as determined by the `outputharmonic` parameter. When `outputallharms` is set to `yes`, all harmonics are calculated and sent to output. In addition, when `outputallharms` is set to `yes` and the input excitation is single-tone, SpectreRF also calculates and stores the output time domain waveform. This parameter applies to `fast mode envlp` analysis only. Possible values are `no` and `yes`.

© 2003-2020 All Rights Reserved.

Fast envelope noise model parameters

63	`noisemethod=off`	This parameter controls the noise model in fast envelope mode. `noisemethod` does not apply in regular envelope (when `fastmode=off`). By default, `noisemethod=off` and the circuit is treated as noiseless. If `noisemethod=level1`, the noise model is generated from linear noise analysis performed about the DC operating point. If `noisemethod=level2`, the noise model is calculated from a more rigorous periodic noise analysis. The root-mean-square value of the magnitude of the input signal and the mean of the phase of the input signal are used as the operating point in periodic noise analysis. The level2 model is preferred in almost all the practical situations. The `level1` model is faster to extract and may be useful in certain situations under nearly-linear operating conditions. Possible values are `off`, `level1`, and `level2`.
64	`fstart=1k`	This parameter sets the starting sweep frequency for the fast envelope noise sweep.
65	`dec=3`	This parameter controls the noise frequency sweep for the fast envelope noise model. It is applicable when `noisemethod= level2`. When set, the simulator performs a linear or periodic noise analysis around output harmonic, using dec log steps per decade in the frequency interval given by [*`fstart, 1/(2*Tstep)`*]. If `lin` and `dec` are both specified, log sweep is used and the parameter lin is ignored.
66	`lin=10`	This parameter controls the noise frequency sweep for the fast envelope noise model. It is applicable when `noisemethod= level2`. When set, the simulator performs a linear or periodic noise analysis around output harmonic, using lin equal steps in the frequency interval given by [*`fstart, 1/(2*Tstep)`*].

Wireless fundamental parameters

67	`wsource`	Wireless source in envlp analysis. It must be selected within wsource instances.

© 2003-2020 All Rights Reserved.

68	`wprobe=[...]`	The wprobe vector in envlp analysis. It is designed to measure evm or ber, and so on.

Harmonic Balance Envelope parameters

69	`funds=[...]`	Array of fundamental frequency names for fundamentals that will be used for Harmonic Balance Envelope.
70	`maxharms=[...]`	Array of number of harmonics of each fundamental that will be considered for Harmonic Balance Envelope.
71	`freqdivide`	Large signal frequency division.
72	`fundfreqs=[...]`	Array of fundamental frequencies to use in multi-carrier envelope.
73	`harmonicbalance=no`	Use Harmonic Balance Envelope. Possible values are `no` and `yes`.
74	`flexbalance=no`	The same parameter as `harmonicbalance`. Possible values are `no` and `yes`.
75	`oversamplefactor=1`	Oversample sample device evaluations for Harmonic Balance Envelope.
76	`oversample=[...]`	Array of oversample factors for each tone for Harmonic Balance Envelope.

Tstab save/restart parameters

77	`saveperiod`	Save the tran analysis periodically on the simulation time.
78	`saveclock=1800 s`	Save the tran analysis periodically on the wall clock time.
79	`savetime=[...]`	Save the analysis states into files on the specified time points.
80	`savefile`	Save the analysis states into the specified file.
81	`recover`	Specify the file to be restored.

© 2003-2020 All Rights Reserved.

envlp-PAC parameters

82	`pacnames=[...]`	Names of pac, pnoise, psp, or pxf analyses to be performed at each time point in the `pactimes` array. Not for AMS.
83	`pactimes=[...] s`	Times when analyses specified in `pacnames` array are performed. Not for AMS.

If `period` or `fund` is not specified, the simulator examines all the sources whose name matches the clock name specified in the analysis line by the `clockname` parameter to determine the clock frequency. If more than one frequency is found, the greatest common factor of these frequencies is used as the clock frequency.

The maximum envelope step size is affected by many parameters. It can be directly limited by `envmaxstep`. It is also limited by `modulationbw`. You provide an estimate of the modulation bandwidth. The simulator puts at least eight points within the modulation period. It is recommended that you use strobeperiod to get equally spaced envelope points, which will improve the noise floor in power spectrum density computation.

The `harms` and `harmsvec` parameters affect the simulation time in an insignificant way. The spectrum is calculated for all the specified harmonics for all sampled integration cycles as the envelope following analysis marches on. For each harmonic, a file is generated. If `harmonicbalance` is no, `harms` is typically set to 1 or 2 because the high-order harmonics are not accurate.

Most parameters of this analysis are inherited from either transient or PSS analysis and their meanings are consistent. However, a few of them need to be clarified. The effect of `errpreset` on certain envelope following analysis parameters is shown in the following table.

For `conservative` autonomous envelope, default values for `method` and `envmethod` are set to `traponly` to avoid numerical damping of the oscillator.

In this table, `T` is the period of the clock.

Table 3-1 Parameter defaults as a function of errpreset

errpreset	maxstep	envmaxstep	reltol	relref	steadyratio	envlteratio
liberal	T/20	Interval/10	0.01	sigglobal	0.1	0.35

© 2003-2020 All Rights Reserved.

moderate	T/20	Interval/25	0.001	siggloba l	0.1	3.5
conservative	T/50	Interval/50	0.0001	alllocal	1.0	35.0

The default value for `compression` is no. The output file stores data for every signal at every timepoint for which Spectre calculates a solution. Spectre saves the X-axis data only once, because every signal has the same x value. If `compression=yes`, Spectre writes data to the output file only if the signal value changes by at least two times the convergence criteria. To save data for each signal independently, X-axis information corresponding to each signal must be saved. If the signals stay at constant values for large periods of the simulation time, setting `compression=yes` results in a smaller output data file. If the signals in your circuit move around a lot, setting `compression=yes` results in a larger output data file.

Parameter Index

In the following index, the number corresponding to each parameter name indicates where to find the description of that parameter:

annotate 36
circuitage 49
clockname 1
cmin 20
inexactNewton 33
itres 31
lin 67
lnsolver 32
lteratio 29
maxharms 71
maxiters 46
harms 38
harmsvec 39
ic 15
pactimes 84
period 7
readenv 55
readic 17
readns 19
recover 82
relref 28
sweepnum 60
oversample 77
oversamplefactor 76
pacnames 83
steadyratio 34
stepperiod 14
stepsize 13
stop 4
strobeperiod 44
swapfile 23
sweepmethod 59
fastmethod 53
srcq 57
srcw 58
start 5
compression 43
dec 66
envlteratio 35
envmaxiters 47
envmaxstep 11
envmethod 24
errpreset 27
maxstep 10

© 2003-2020 All Rights Reserved.

resolutionbw 3
restart 48
transtrobeperiod 45
tstab 6
useprevic 18
wprobe 69
write 21
writeenv 54
writefinal 22
wsource 68
title 37
fixstepsize 12
flexbalance 75
fmspeedup 50
freqdivide 72
fstart 65
fund 8
fundfreqs 73
funds 70
harmonicbalance 74
fastmode 52
modulationbw 2
nestlvl 42
noisemethod 64
oscic 26
output 61
outputallharms 63
outputharmonic 62
outputstart 9
outputtype 40
method 25
save 41
saveclock 79
savefile 81
saveinit 51
saveperiod 78
savetime 80
skipdc 16
smoothcheck 30
srci 56

© 2003-2020
All Rights Reserved.

Harmonic Balance Steady State Analysis (hb)

Description

This analysis uses harmonic balance (in the frequency domain) to compute the response of circuits with one fundamental frequency (periodic steady-state, PSS) or multiple fundamental frequencies (quasi-periodic steady-state, QPSS). The simulation time required for an HB analysis is independent of the time-constants of the circuit. This analysis also determines the circuit's periodic or quasi-periodic operating point, which can then be used during a periodic or quasi-periodic time-varying small-signal analysis, such as HBAC, HBSP, or HBNOISE.

Usually, harmonic balance (HB) analysis is an efficient way to simulate weak nonlinear circuits. In addition, HB analysis works better than shooting analysis (in the time domain) for frequency-dependent components, such as delay, transmission line, and S-parameter data.

An HB analysis consists of two phases. The first phase calculates an initial solution, which the second phase then uses to compute the periodic or quasi-periodic steady-state solution, by using the Newton method.

The two most important parameters for HB analysis are `funds` and `maxharms`. The `funds` parameter accepts a list of names of fundamentals that are present in the sources. These names are specified in the sources by the `fundname` parameter. If only one name appears, the analysis is an HB PSS analysis. On the other hand, if more than one name appears, the analysis is an HB QPSS analysis. The `maxharms` parameter accepts a list of numbers of the harmonics that are required to adequately model the responses due to the different fundamentals.

The annotate parameter has two values specific to HB analysis: `detailed_hb` and `internal_hb`. When `annotate` is set to `detailed_hb` or `internal_hb`, additional analysis debug information is printed to the log files. In the case of `internal_hb`, encrypted debug information is stored in the internal log file. Both options are valid for pss and qpss analyses with `flexbalance=yes`.

For information on how to run hb analysis from ADE, see *Frequency Domain Analysis: Harmonic Balance* chapter in the *Spectre Circuit Simulator and Accelerated Parallel Simulator RF Analysis User Guide*.

Definition

```
Name  [p]  [n] hb parameter=value ...
```


© 2003-2020 All Rights Reserved.

Parameters

HB fundamental parameters

1	`funds=[...]`	Array of fundamental frequency names for fundamentals to use in analysis.
2	`fundfreqs=[...]`	Array of fundamental frequencies to use in analysis.
3	`maxharms=[...]`	Array of number of harmonics of each fundamental to consider for each fundamental.
4	`autoharms=no`	Activates automatic harmonic number calculation in harmonic balance. Applies only if tstab>0 or if `autotstab=yes`. If a steady-state is reached, Spectre does a spectrum analysis to calculate the optimal number of harmonics for HB. The minimum number of harmonics is specified by `maxharms`. If steady-state is not reached to sufficient tolerance, `autoharms` may be disabled. Possible values are `no` and `yes`.
5	`selectharm`	Name of harmonics selection methods. Default is `diamond` when `maximorder` or `boundary` is set; otherwise, default is `box`. Possible values are `box`, `diamond`, `funnel`, `axis`, `widefunnel`, `crossbox`, `crossbox_hier`, and `arbitrary`.
6	`evenodd=[...]`	Array of even, odd, or all strings for moderate tones to select harmonics.
7	`maximorder`	Maximum intermodulation order of harmonics in `diamond`, `funnel`, `widefunnel`, `crossbox` and `crossbox_hier` cuts. For example, in a two-tone case, a harmonic, [hx hy], is in the `diamond`, `funnel` or `widefunnel` harmonic set when `|hx|+|hy| <= maximorder`. And it is in the `crossbox` or `crossbox_hier` set when `|hx| <= maximorder` and `|hy| <= maximorder`.
8	`mappingfft=no`	This parameter is valid only for funnel harmonic cut. Setting this parameter to `yes` may save more memory but can hamper accuracy expense. Possible values are `no` and `yes`.

© 2003-2020 All Rights Reserved.

9	`axisbw`	The width of the band part of wide funnel harmonic cut along axis.
10	`minialiasorder`	The order of mini aliasing harmonic order.
11	`selharmvec=[...]`	Array of harmonics indexes.
12	`freqdivide`	Large signal frequency division.
13	`freqdividevector=[...]`	Array of frequency division factors for each tone. This parameter overrides `freqdivide`.

Simulation interval parameters

14	`tstab=0.0 s`	Extra stabilization time after the onset of periodicity for independent sources.
15	`autotstab=no`	Activates the automatic initial transient (tstab) in harmonic balance and PSS shooting. If set to `yes`, the simulator decides whether to run tstab and for how long. Typically, the initial length of tstab is 50 periods; however, it could be longer depending on the type of circuit and its behavior. If steady-state is reached (or nearly reached), tstab terminates early. Possible values are `no` and `yes`.
16	`autosteady=no`	Activates the automatic steady state detection during initial transient (tstab) in harmonic balance and PSS shooting. When steady state is reached (or nearly reached), tstab terminates early. This parameter applies only when tstab>0 or when `autotstab=yes`. Possible values are `0`, `1`, `2`, `no` and `yes`. ■ `autosteady=no|0` deactivates this feature ■ `autosteady=yes|1` activates this feature ■ `autosteady=2` runs autosteady with lower steady state tolerance than `autosteady=1` ■ `autosteady=2` may help pss convergence but with higher tstab costs

© 2003-2020 All Rights Reserved.

Time-step parameters

17	`maxstep (s)`	Maximum time step. The default is derived from `errpreset`.

Initial-condition parameters

18	`ic=all`	The value to be used to set the initial condition. Possible values are `dc`, `node`, `dev`, and `all`.
19	`skipdc=no`	If set to `yes`, there is no DC analysis for initial transient. Possible values are `no`, `yes` and `sigrampup`.
20	`readic`	File that contains initial condition.
21	`oscic=default`	Oscillator IC method. It determines how the starting values for the oscillator are calculated. `oscic=lin` provides you an accurate initial value, but it takes time. `oscic=lin_ic`, which is an older version of `oscic=lin` is used for shooting analysis for backward compatibility and is not recommended. `oscic=fastic` is fast, but it is less accurate. `oscic=skip` directly uses the frequency you provided as the initial guess frequency. It is only for two-tier method. Possible values are `default`, `lin`, `lin_ic`, `fastic`, and `skip`.
22	`useprevic=no`	If set to `yes` or `ns`, use the converged initial condition from previous analysis as ic or ns. Possible values are `no`, `yes` and `ns`.
23	`tone_homotopy=[...]`	Array of homotopy options for convergence assistance with multi-divider cases when `hbhomotopy=aggregation`. The number of entries should be equal to that of tones. The possible values for each entry are `0`, `1` and `2`. `0` means no convergence assistance is applied for that tone. `1` means only transient stabilization (tstab) is run for that tone and `2` means that both tstab and a single-tone HB simulation should be run to obtain the initial guess for multi-tone HB simulation.

© 2003-2020 All Rights Reserved.

Convergence parameters

24	`readns`	File that contains an estimate of the initial transient solution.
25	`cmin=0 F`	Minimum capacitance from each node to ground.
26	`hbhomotopy=tone`	Name of Harmonic Balance homotopy selection methods. Possible values are `tstab`, `source`, `gsweep`, `tone`, `inctone`, and `aggregation`.
27	`gstart=1.e-7`	Start conductance for `hbhomotopy` of `gsweep`.
28	`gstop=1.e-12`	Stop conductance for `hbhomotopy` of `gsweep`.
29	`glog=5`	Number of steps; log sweep for `hbhomotopy` of `gsweep`.
30	`sweepic=none`	IC extrapolation method in sweep HB analysis. Possible values are `none`, `linear` and `log`.
31	`oscmethod`	Osc Newton method for autonomous HB. Possible values are `onetier` and `twotier`.
32	`pinnode`	Node to pin during autonomous HB simulation.
33	`pinnoderank`	Harmonic rank to pin during autonomous HB simulation.
34	`pinnodemag`	This parameter gives an estimate of the magnitude of the pin node voltage. Default value is 0.01.
35	`pinnodeminus`	Second node to pin during autonomous HB simulation. Needed only when differential nodes exist in oscillator.
36	`backtracking=yes`	Activate the backtracking utility of Newton's method. The default value is `yes`. Possible values are `no`, `yes`, and `forced`.

Output parameters

37	`save`	Signals to output. Possible values are `all`, `lvl`, `allpub`, `lvlpub`, `selected`, `none`, and `nooutput`.
38	`nestlvl`	Levels of subcircuits to output.
39	`saveinit=no`	If set to `yes`, the waveforms for the initial transient before steady state are saved. Possible values are `no` and `yes`.

© 2003-2020 All Rights Reserved.

Integration method parameters

40	`tstabmethod`	Integration method used in stabilization time. The default is `traponly` for autonomous circuits, or is derived from `errpreset` for driven circuits. Possible values are `euler`, `trap`, `traponly`, `gear2`, and `gear2only`.

Accuracy parameters

41	`errpreset`	Selects a reasonable collection of parameter settings. Possible values are `liberal`, `moderate`, and `conservative`.
42	`maxperiods`	Maximum number of iterations allowed before convergence is reached in shooting or harmonic balance Newton iteration. For PSS and QPSS, the default is 20 for driven circuits, and 50 for oscillators. For HB, the default is 100.
43	`max_innerkrylov_size=20`	The maximum iteration number allowed in inner gmres solver in two-level gmres linear solver. The default value is `12` for large signal and `20` for small signal analysis.
44	`max_outerkrylov_size=4`	The maximum iteration number allowed in inner gmres solver in two-level gmres linear solver. The default value is `4`.
45	`itres=1e-4` for shooting, `0.9` for HB	Controls the residual for iterative solution of linearized matrix equation at each Newton iteration. Tightening the parameter can help with the Newton convergence, but does not affect the result accuracy. The value should be between [0, 1]. Default value for shooting APS flow is 1e-3.

© 2003-2020 All Rights Reserved.

46	`krylov_size=10`	The minimum iteration count of the linear matrix solver used in HB large-signal analysis. After reaching `krylov_size` iterations, the iteration is forced to terminate because of the poor rate of convergence. Increase `krylov_size` if the simulation reports insufficient norm reduction errors in GMRES.
47	`oversamplefactor=1`	Oversample device evaluations.
48	`oversample=[...]`	Array of oversample factors for each tone. This parameter overrides `oversamplefactor`.
49	`excludeconvgwithBK=yes`	Possible values are `no` and `yes`.
51	`hbpartition_defs=[...]`	Define HB partitions.
50	`hbpartition_fundratios=[...]`	Specify HB partition fundamental frequency ratios.
52	`hbpartition_harms=[...]`	Specify HB partition harmonics.
53	`hbprecond_solver=basicsolver`	Choose a linear solver for the GMRES preconditioner. Possible values are `basicsolver`, `blocksolver`, `autoset`, `blockdense`, and `blocksolver2`.
54	`lowmem=0`	Harmonic balance low memory mode. Possible values are `0`, `1`, or number (>=10). The default value is `0`, it indicates that the low memory mode is turned off; if `1` is set, the standard low memory mode is turned on; if a number greater than or equal to `10` is set, Spectre interprets the value as memory requested in Gigabytes.

Annotation parameters

55	`annotate=sweep`	Degree of annotation. Possible values are `no`, `title`, `sweep`, `status`, `estimated`, `steps`, `iters`, `detailed`, `rejects`, `alliters`, `detailed_hb`, and `internal_hb`.

© 2003-2020 All Rights Reserved.

56	`title`	Analysis title.

Newton parameters

57	`restart=no`	Restart the DC/PSS/QPSS solution if set to `yes`; if set to `no`, reuse the previous solution as an initial guess; if set to `firstonly`, restart if it is the first point of sweep (supported only in HB). The default value is `no` for HB and `yes` for shooting. Possible values are `no`, `yes` and `firstonly`.

Circuit age

58	`circuitage (Years)`	Stress time. Age of the circuit used to simulate hot-electron degradation of MOSFET and BSIM circuits.

State-file parameters

59	`writehb`	File to which final harmonic balance steady-state solution is to be written. Small-signal analyses, such as hbac, hbsp, and hbnoise can read the steady-state solution from this file directly instead of running the hb analysis again.
60	`readhb`	File from which final harmonic steady-state solution is to be read. Small signal analyses such as hbac, hbsp, and hbnoise can read in the steady-state solution from this file directly instead of running the hb analysis again.
61	`selharmread`	File from which arbitrary harmonic data needs to be read.
62	`selharmwrite`	File to which harmonic data needs to be written.

© 2003-2020 All Rights Reserved.

Tstab save/restart parameters

63	`saveperiod`	Save the transient analysis periodically on the simulation time.
64	`saveperiodhistory=no`	Maintains the history of saved files. If `yes`, maintains all the saved files. Possible values are `no` and `yes`.
65	`saveclock (s)`	Save the transient analysis periodically on the wall clock time. The default is `1800s` for Spectre. By default, this parameter is disabled in the Spectre APS mode.
66	`savetime=[...]`	Save the analysis states into files on the specified time points.
67	`savefile`	Save the analysis states into the specified file.
68	`recover`	Specify the file to be restored.

Compression parameters

69	`xdbcompression="no"`	Sets the automatic gain compression analysis. In automatic gain compression analysis, Spectre automatically sweeps the input excitation until the gain, as defined by the analysis parameter `xdbgain`, compresses by the amount specified by the analysis parameter `xdblevel`. In gain compression analysis, Spectre outputs the hb solution at the calculated compression point only. Dependent analyses, such as hbnoise and hbac, are supported and calculated about the calculated compression level. Auxiliary output includes the gain and voltage/power compression curves. These outputs are available for analysis and post-processing in ADE. The possible values are `yes` and `no`. Default is `no`.
70	`xdblevel=[...]`	Sets the gain compression level for compression analysis. The reference point for gain compression is the small-signal gain of the circuits, or as specified by the analysis parameter `xdbref`. Default is `1`.

© 2003-2020 All Rights Reserved.

71	`xdbgain="power"`	Chooses between the voltage gain and transducer power gain as the target for compression point calculation. When `xdbgain=power`, the gain is defined as *G (dB) = Pload (dBm) - Pavailable (dBm)*. When `xdbgain=voltage`, the gain is defined as *G (dB) = dB20(|Vload|/|Vsource|)*. In both cases, Spectre sweeps the excitation source until *xdbref - G = xdblevel*, where the analysis parameter xdbref defines the reference level for compression calculation. Possible values are `power` and `voltage`. Default is `power`.
72	`xdbref="linear"`	Sets the reference point for gain compression calculations. When `xdbref=linear`, spectre uses the small-signal gain as the reference. When `xdbref=max`, spectre uses the maximum observed gain as the reference. Possible values are `linear` and `max`. Default is `linear`.
73	`xdbsource`	The instance name of the excitation source, which is swept automatically to reach the compression level. When `xdbgain=power`, the excitation source must be a port instance. When `xdbgain=voltage`, the excitation source must be a vsource instance .
74	`xdbload`	The instance name of the load termination. When `xdbgain` is `power`, `xdbload` can be a port, a resistor, or a current probe.
75	`xdbnodep`	The output terminals for voltage gain calculation when `xdbgain=voltage`. If either is left unspecified, the terminal is assumed to be the global ground.
76	`xdbnoden`	The output terminals for voltage gain calculation when `xdbgain=voltage`. If either is left unspecified, the terminal is assumed to be the global ground.
77	`xdbrefnode`	The reference node when `xdbload` is a current probe. The default is the ground node.
78	`xdbharm=[...]`	The Integer array which specifies the harmonic indexes of the output voltage or power component.
79	`xdbsteps=100`	The maximum number of steps for the compression point search. The simulator terminates if `xdbsteps` exceeds before the compression point is found. The default is `100`.

© 2003-2020 All Rights Reserved.

80	`xdbmax`	The maximum input power (or voltage) for the compression point search. Default is `30 dBm` when `xdbgain=power`, and `2.0 V` when `xdbgain=voltage`.
81	`xdbstart`	The starting input power (or voltage) for the compression point search. Default is (`xdbmax-70`) `dBm` when `xdbgain=power`, and `xdbmax/20000` when `xdbgain=voltage`.
82	`xdbtol=0.01`	Sets the tolerance for compression analysis. This tolerance is used in compression curve fitting and calculating the compression point.
83	`xdbrapid="no"`	Sets the automatic gain compression analysis in rapid mode. In this mode, Spectre does not trace the compression curve and calculates only the compression point.
84	`xdbcpi`	Sets the estimated input-referred compression point for rapid compression analysis.
85	`backoff=0.0`	The backoff point. If defined, an addition harmonic balance analysis will be performed after the compression analysis is done. Default is `0 dBm` when `xdbgain=power`, and `0 V` when `xdbgain=voltage`.

Memory estimation parameters

86	`memoryestimate="no"`	

© 2003-2020 All Rights Reserved.

		Sets the memory usage estimate for Harmonic Balance. If `yes`, a memory estimate is printed in the log file. You can use this memory estimate to plan the computing resources before submitting harmonic balance runs. In memory estimate mode, a short simulation is performed first, and the engine exits after printing the estimate in the log file without saving any results. If set to `no`, the simulation continues after the memory estimate is printed. Memory estimation is not recommended for simulations that require less than 500MB approximately. For PSS analysis, memory estimate mode does not apply unless `flexbalance=yes`. `memoryestimate=1` estimates the memory usage for large-signal analysis and `memoryestimate=2` estimates both large-signal analysis and small-signal simulations. Possible values are `no`, and `yes`.

Oscillator tuning mode parameters

87	`tuneparam`	When set, `tuneparam` enables the tuning mode oscillator analysis. In the tuning mode analysis, a circuit parameter is automatically varied to reach the oscillation frequency specified by the `fundfreqs` parameter. The tuning parameter can be a device instance parameter (as determined by the parameters `tunedev`) or a netlist parameter. This mode applies only to autonomous circuits (oscillators).
88	`tunedev`	Sets the instance name of a device whose parameter (identified by `tuneparam)` will be varied such that the circuit oscillates at the specified frequency. Applies only in tuning mode autonomous analysis. `Tunedev` must be used with `tuneparam`.
89	`tunerange=[...]`	The tuning range of the parameter identified by `tuneparam`. Although `tunerange` is not required, it can aid in convergence, if set. It can also be used with `tunestep` or `tunelin` to decide the acceptable discrete parameter set.
90	`tunestep`	Specify the step size between two adjacent discrete tuning points. Must be used with 'tunerange'.

© 2003-2020 All Rights Reserved.

91	`tunelin`	Specify the numbers of discrete tuning points. Must be used with 'tunerange'.
92	`tunevalues=[...]`	Specify the values of discrete tuning points.

LSSP parameters

93	`lsspports=[...]`	Specifies the list of ports on which the large-signal 2-port S-parameters are calculated.
94	`lsspharms=[...]`	Specifies the output harmonic for large-signal S-parameter calculations. The input harmonic is defined by the frequency parameters on the input port instance.
95	`lsspfile`	Identifies the file name for large-signal S-parameter output.
96	`lsspdatafmt="touchtone"`	Sets the file format of the large-signal S-parameter output. Possible values are `spectre` and `touchstone`. Default is `touchstone`.
97	`lsspdatatype="magphase"`	Sets the data format or the large-signal S-parameter output. Possible values are `realimag`, `magphase`, and `phase`. Default is `magphase`.

Dynamic parameters

98	`param`	Name of the parameter to be updated during pss/hb analysis (tstab stage). When `param=paramName` and `param_vec=[t1 value1 t2 value2 ... valuen tn]`, `paramName` is set to `value1` at `t1`, `value2` at `t2`, and so on. Pss/hb analysis uses the last value in the `param_vec(valuen)` to find the steady state.
99	`paramset`	Name of dynamic parameter set.
100	`param_vec=[...]`	The `time_value` points to `param=name`.
101	`param_file`	The file that contains the `time_value` points to `param=name`.
102	`sub`	Name of the subcircuit instance parameter specified in param=name.

© 2003-2020 All Rights Reserved.

103	`mod`	Name of the device model parameter specified in param=name.
104	`dev`	Name of the device instance parameter specified in param=name.
105	`param_step`	Defines the frequency of updating the dynamic parameter values. If `param_step=0`, it updates the parameter value at a given time point.

Osc macro source parameters

106	`oscmacrogene=no`	If set to `yes`, harmonic balance steady-state solution is saved. Possible values are `no` and `yes`.
107	`oscmacroprobe`	Specifies the probe for which the current data is to be saved.
108	`oscmacroout=[...]`	Specifies the nodes for which the voltage data is to be saved.
109	`oscmacrosave`	File to which harmonic balance steady-state solution is to be written.

The initial transient analysis provides a flexible mechanism to direct the circuit to a particular steady-state solution of interest and to avoid undesired solutions. The initial transient simulation also helps convergence by eliminating the large but fast decaying modes that are present in many circuits.

In some circuits, the linearity of the relationship between the initial and final states depends on when HB analysis begins. In practice, starting at a good point can improve convergence, and starting at a bad point can degrade convergence and slow down the analysis.

When HB analysis simulates oscillators, initialization is performed to obtain an initial guess of the steady-state solution and of the oscillating frequency. Two initialization methods are implemented, based on transient and linear analysis. When `oscic=default` is specified, transient initialization is used and the length of the transient is specified by `tstab`. You must start the oscillator by using initial conditions or by using a brief impulsive stimulus, just as you would if you were simulating the turn-on transient of the oscillator by using transient analysis. Initial conditions would be provided for the components of the oscillator's resonator. If an impulsive stimulus is used, it should be applied so as to couple strongly into the oscillatory mode of the circuit and poorly into any other long-lasting modes, such as those associated with bias circuitry. The Designers Guide to Spice and Spectre [K. S. Kundert, Kluwer

© 2003-2020 All Rights Reserved.

Academic Publishers, 1995] describes in depth some techniques for starting oscillators. When `oscic=lin` is specified, linear initialization is used. In this method both oscillation frequency and amplitude are estimated based on linear analysis at DC solution. No impulsive stimulus or initial conditions are needed. Linear initialization is suitable for linear type of oscillators, such as LC and crystal oscillators.

Note: tstab transient is still performed after linear initialization, though it can be significantly shortened or skipped. Either way, specifying a non-zero `tstab` parameter can improve convergence.

For the `funds` parameter, the frequencies associated with fundamentals are figured out automatically by the simulator. An important feature is that each input signal can be a composition of more than one source. However, these sources must have the same fundamental name. For each fundamental name, the fundamental frequency is the greatest common factor of all frequencies associated with the name. Omitting a fundamental name in the `funds` parameter is an error that stops the simulation. If `maxharms` is not given, a warning message is issued, and the number of harmonics defaults to `1` for each of the fundamentals in multi-tone simulation and `10` in single-tone simulation.

HB signal partition is a method of decomposing a circuit so that multi-rate behavior can be exploited to increase simulation performance. If every part of a circuit has the same spectrum structure, such as fundamental frequency and bandwidth, there is no need to apply signal partition. However, if the RF circuit has multiple tones, the signals in different parts can have various spectrum structures, such as different fundamental frequency and number of harmonics. With HB signal partition, you can divide the circuit into several parts based on the signals contained in them. The parameter `hbpartition_defs` defines the partitions. Each partition can be made up of one or more instances. For example,

```
hbpartition_defs = ["I9 I10" "I11 I12" "I13 I14"]
```

defines three partitions. The first partition consists of instance "`I9`" and "`I10`" while the second partition consists of instances "`I11`" and "`I12`".The third one has "`I13`" and "`I14`".

The number of instances for each partition should not be less than 1 and there is no upper limit for the number.

The principle for dividing a circuit is that the subcircuits or instances with the same spectrum properties should be put into one partition. The parameter `hbpartition_harms` specifies the maximum number of positive harmonics of each tone for every partition. For example:

```
hbpartition_harms=["10 0 0" "5 3 3" "3 3 3"]
```

So, the maximum number of positive harmonics for the first partition is `10`, `0` and `0`, respectively. For the second partition, it is `5`, `3` and `3`. For the last one, it is `3`, `3` and `3`.

© 2003-2020 All Rights Reserved.

The parameter `hbpartition_fundratios` indicates the fundamental frequency ratio of each tone for each partition. With these ratios, it is easy to know the fundamental frequencies of each tone of the partitions. For example:

```
hbpartition_fundratios=["2 1 1" "1 1 1" "1 1 1"]
```

If three global fundamental frequencies are defined as: `LO=1GHz`, `RF1=1.1GHz` and `RF2=1.13GHz`, it indicates the fundamental frequencies of each tone of the first partition is `2*LO`, `1*RF1`, and `1*RF2`, respectively. The second and third partition has the same frequencies for their each tone: `1*LO`, `1*RF1` and `1*RF2`. However, you have to make sure that the global fundamental frequencies for each tone are the smallest among all the partitions and the ratios are integers.

The parameter `maxperiods` default value is set to 50 for HB.

The `errpreset` parameter lets you adjust the simulator parameters to fit your needs quickly. In most cases, it should also be the only parameter you need to adjust. If you want a fast simulation with reasonable accuracy, you can set `errpreset` to `liberal` (it is not recommended to use `liberal` on an RF circuit). If you have some concern for accuracy, you can set `errpreset` to `moderate`. If accuracy is your main interest, you can set errpreset to `conservative.`

The following table shows the effect of `errpreset` on other parameters in HB with One-tone Driven Circuits, Multi-tone Driven Circuits and Autonomous Circuits:

Parameter defaults as a function of errpreset with different circuits

	One-tone Driven Circuits		Multi-tone Driven Circuits and Autonomous Circuits	
`errpreset`	reltol (max)	Iteratio	reltol (max)	Iteratio
`liberal`	1e-3	3.5	1e-3	3.5
`moderate`	1e-3	3.5	1e-4	3.5
`conservative`	1e-4	*	1e-5	*

* : Iteratio=10.0 for conservative errpreset by default. However, when the option reltol <= 1e-4*10.0/3.5, Iteratio is set to 3.5 for one-tone driven circuits and when the option reltol <= 1e-5*10.0/3.5, Iteratio is set to 3.5 for multi-tone driven circuits and autonomous circuits.

The values of `reltol` are usually different in the tstab interval and in the hb interval. During tstab, reltol is set to the option reltol, whose default value is 1e-3. This part is not impacted by errpreset. If you want to change the value, set reltol in Spectre options. Any value more than 1e-3 is ignored.

© 2003-2020 All Rights Reserved.

The value of `reltol` in the hb interval is affected by both errpreset and the option reltol. errpreset sets the maximum value of reltol (as shown in the table above). If the option reltol is less than the maximum value, it is set to the option reltol. Otherwise, the maximum value is used. reltol value that is more than 1e-3 is ignored.

If errpreset is not specified in the netlist, moderate settings is used.

If the circuit you are simulating has infinitely fast transitions (for example, a circuit that contains nodes with no capacitance), Spectre might have convergence problems. To avoid this, you must prevent the circuit from responding instantaneously. You can accomplish this by setting `cmin`, the minimum capacitance to ground at each node, to a physically reasonable nonzero value. This often significantly improves Spectre convergence.

You can specify the initial condition for the transient analysis by using the `ic` statement or the `ic` parameter on the capacitors and inductors. If you do not specify the initial condition, the DC solution is used as the initial condition. The `ic` parameter on the transient analysis controls the interaction of various methods of setting the initial conditions. The effects of individual settings are as follows:

`ic=dc`: All initial conditions are ignored, and the DC solution is used.

`ic=node`: The `ic` statements are used, and the `ic` parameter on the capacitors and inductors is ignored.

`ic=dev`: The `ic` parameters on the capacitors and inductors are used, and the `ic` statements are ignored.

`ic=all`: Both `ic` statements and `ic` parameters are used, and the `ic` parameters override the `ic` statements.

If you specify an initial condition file with the `readic` parameter, initial conditions from the file are used, and any `ic` statements are ignored.

After you specify the initial conditions, Spectre computes the initial state of the circuit by performing a DC analysis. During this analysis, Spectre forces the initial conditions on nodes by using a voltage source in series with a resistor whose resistance is `rforce` (see `options`).

With the `ic` statement, it is possible to specify an inconsistent initial condition (one that cannot be sustained by the reactive elements). Examples of inconsistent initial conditions include setting the voltage on a node with no path of capacitors to ground or setting the current through a branch that is not an inductor. If you initialize Spectre inconsistently, its solution jumps; that is, it changes instantly at the beginning of the simulation interval. You should avoid such changes because Spectre can have convergence problems while trying to make the jump.

© 2003-2020 All Rights Reserved.

You can skip DC analysis entirely by using the parameter `skipdc`. If DC analysis is skipped, the initial solution is trivial or is given in the file that you specified by using the `readic` parameter, or if the `readic` parameter is not specified, by the values specified on the `ic` statements. Device-based initial conditions are not used for `skipdc`. Nodes that you do not specify with the `ic` file or `ic` statements start at zero. You should not use this parameter unless you are generating a nodeset file for circuits that have trouble in the DC solution; it usually takes longer to follow the initial transient spikes that occur when the DC analysis is skipped than it takes to find the real DC solution. The `skipdc` parameter might also cause convergence problems in the transient analysis.

The possible settings of parameter `skipdc` and their descriptions are as follows:

`skipdc=no`: Initial solution is calculated using normal DC analysis (default).

`skipdc=yes`: Initial solution is given in the file specified by the `readic` parameter or the values specified on the ic statements.

`skipdc=sigrampup`: Independent source values start at 0 and ramp up to their initial values in the first phase of the simulation. The waveform production in the time-varying independent source is enabled after the rampup phase. The rampup simulation is from `tstart` to time=0 s, and the main simulation is from time=0 s to `tstab`. If the `tstart` parameter is not specified, the default `tstart` time is set to -0.1*`tstab`.

Nodesets help the simulator find the DC or initial transient solution. You can specify nodesets in the circuit description file with `nodeset` statements, or in a separate file using the `readns` parameter. When nodesets are specified, Spectre computes an initial guess of the solution by performing DC analysis, while forcing the specified values on to nodes by using a voltage source in series with a resistor whose resistance is `rforce`. Spectre then removes these voltage sources and resistors and computes the true solution from this initial guess.

Nodesets have two important uses. First, if a circuit has two or more solutions, nodesets can bias the simulator towards computing the desired solution. Second, they are a convergence aid. By estimating the solution of the largest possible number of nodes, you might be able to eliminate a convergence problem or significantly speed up convergence.

Nodesets and initial conditions have similar implementation, but produce different effects. Initial conditions define the solution, whereas nodesets only influence it. When you simulate a circuit with a transient analysis, Spectre forms and solves a set of differential equations. Because differential equations have an infinite number of solutions, a complete set of initial conditions must be specified to identify the required solution. Any initial conditions that you do not specify are computed by the simulator to be consistent. The transient waveforms then start from initial conditions. Nodesets are usually used as a convergence aid and do not affect the final results. However, in a circuit with more than one solution, such as a latch, nodesets bias the simulator towards finding the solution closest to the nodeset values.

© 2003-2020 All Rights Reserved.

With parameter `hbhomotopy`, you can specify harmonic balance homotopy selection methods. The possible values of parameter `hbhomotopy` and their descriptions are as follows:

`hbhomotopy=tstab`: Simulator runs a transient analysis and generates an initial guess for harmonic balance analysis; it is recommended for nonlinear circuits or circuits with frequency dividers.

`hbhomotopy=source`: For driven circuit, the simulator ignores tstab and accordingly increases the source power level; for oscillators, the simulator accordingly adjusts the probe magnitude until the probe has no effect on the oscillators. It is recommended for strongly nonlinear or high Q circuits.

`hbhomotopy=tone`: This method is valid only for multi-tone circuit. The simulator first solves a single-tone circuit by turning off all the tones, except the first one, and then solves the multi-tone circuit by restoring all the tones and using the single-tone solution as its initial guess. It is recommended for multi-tone simulation with a strong first tone.

`hbhomotopy=inctone`: The simulator first solves a single tone, then turns on moderate tones incrementally till all tones are enabled. It is recommended for circuits with one strong large tone.

`hbhomotopy=gsweep`: A resistor, whose conductance is g, is connected with each node, and the sweep of g is controlled by gstart, gstop, and glog. It is recommended for circuits containing high-impedance or quasi-floating nodes.

Parameter Index

In the following index, the number corresponding to each parameter name indicates where to find the description of that parameter:

annotate 55	lowmem 54	param_vec 100	tstabmethod 40
autoharms 4	lsspdatafmt 96	paramset 99	tunedev 88
autosteady 16	lsspdatatype 97	pinnode 32	tunelin 91
autotstab 15	lsspfile 95	pinnodemag 34	tuneparam 87
axisbw 9	lsspharms 94	pinnodeminus 35	tunerange 89

© 2003-2020 All Rights Reserved.

backoff 85
backtracking 36
circuitage 58
cmin 25
dev 104
errpreset 41
evenodd 6
excludeconvgwithBK 49
freqdivide 12
freqdividevector 13
fundfreqs 2
funds 1
glog 29
gstart 27
gstop 28
hbhomotopy 26
lsspports 93
mappingfft 8
max_innerkrylov_size 43
max_outerkrylov_size 44
maxharms 3
maximorder 7
maxperiods 42
maxstep 17
memoryestimate 86
minialiasorder 10
mod 103
nestlvl 38
oscic 21
oscmacrogene 106
oscmacroout 108
oscmacroprobe 107
pinnoderank 33
readhb 60
readic 20
readns 24
recover 68
restart 57
save 37
saveclock 65
savefile 67
saveinit 39
saveperiod 63
saveperiodhistory 64
savetime 66
selectharm 5
selharmread 61
selharmvec 11
tunestep 90
tunevalues 92
useprevic 22
writehb 59
xdbcompression 69
xdbcpi 84
xdbgain 71
xdbharm 78
xdblevel 70
xdbload 74
xdbmax 80
xdbnoden 76
xdbnodep 75
xdbrapid 83
xdbref 72
xdbrefnode 77

© 2003-2020
All Rights Reserved.

hbpartition_defs 50
oscmacrosave 109
selharmwrite 62
xdbsource 73

hbpartition_fundratios 51
oscmethod 31
skipdc 19
xdbstart 81

hbpartition_harms 52
oversample 48
sub 102
xdbsteps 79

hbprecond_solver 53
oversamplefactor 47
sweepic 30
xdbtol 82

ic 18
param 98
title 56

itres 45
param_file 101
tone_homotopy 23

krylov_size 46
param_step 105
tstab 14

© 2003-2020
All Rights Reserved.

HB AC Analysis (hbac)

Description

The harmonic balance AC (HBAC) analysis computes transfer functions for circuits that exhibit single or multi-tone frequency translation. Such circuits include mixers, switched-capacitor filters, samplers, phase-locked loops, and so on. HBAC is a small-signal analysis like AC analysis, except that the circuit is first linearized about a periodically or quasi-periodically varying operating point, rather than about a simple DC operating point. Linearizing about a periodically or quasi-periodically time-varying operating point allows transfer-functions that include frequency translation, which is not the case when linearizing about a DC operating point because linear time-invariant circuits do not exhibit frequency translation. In addition, the frequency of the sinusoidal stimulus is not constrained by the period of the large periodic solution.

Computing the small-signal response of a periodically or quasi-periodically varying circuit is a two-step process. First, the small stimulus is ignored and the periodic or quasi-periodic steady-state response of the circuit to possibly large periodic stimulus is computed using HB analysis. As part of the HB analysis, the periodically or quasi-periodically time-varying representation of the circuit is computed and saved for later use. The second step is to apply the small stimulus to the periodically or quasi-periodically varying linear representation to compute the small signal response. This is done using the HBAC analysis. An HBAC analysis cannot be used independently; it must follow an HB analysis. However, any number of periodic or quasi-periodic small-signal analyses, such as HBAC, HBSP, or HBNOISE, can follow an HB analysis.

Modulated small signal measurements are possible using the Analog Design Environment (ADE). The `modulated` option for HBAC and other modulated parameters are set by ADE. HBAC analyses with this option produce results that can have limited use outside ADE. Direct Plot is configured to analyze these results and combine several wave forms to measure AM and PM response due to single sideband or modulated stimuli. For details, see *Spectre Circuit Simulator and Accelerated Parallel Simulator RF Analysis User Guide*.

Note: Unlike other analyses in Spectre, the HBAC analysis can only sweep frequency.

For information on how to run HBAC analysis from ADE, see *Harmonic Balance AC Analysis (hbAC)* in the *Spectre Circuit Simulator and Accelerated Parallel Simulator RF Analysis User Guide*.

Definition

```
Name ... hbac parameter=value ...
```


© 2003-2020 All Rights Reserved.

Parameters

Sweep interval parameters

1	`start=0`	Start sweep limit.
2	`stop`	Stop sweep limit.
3	`center`	Center of sweep.
4	`span=0`	Sweep limit span.
5	`step`	Step size, linear sweep.
6	`lin=50`	Number of steps, linear sweep.
7	`dec`	Points per decade.
8	`log=50`	Number of steps, log sweep.
9	`values=[...]`	Array of sweep values.
10	`valuesfile`	Name of the file containing the sweep values.
11	`sweeptype=unspecified`	Specifies if the sweep frequency range is the absolute frequency of input or if it is relative to the port harmonics. When the unspecified value is used, Spectre RF sweeps using relative when autonomous simulation is performed or when the analysis is PSP; for other cases Spectre RF sweeps the absolute value of the input. Possible values are `absolute`, `relative`, and `unspecified`.
12	`relharmvec=[...]`	Sideband - vector of HB harmonics to which relative frequency sweep should be referenced.

Sampled analysis parameters

13	`ptvtype=timeaveraged`	Specifies whether the PTV analysis will be traditional or sampled under certain conditions. Possible values are `timeaveraged` and `sampled`.
14	`sampleprobe`	The crossing event at this port triggers the sampled small signal computation.

© 2003-2020 All Rights Reserved.

15	`thresholdvalue=0`	Sampled measurement is done when the signal crosses this value.
16	`crossingdirection=all`	Specifies the transitions for which sampling must be done. Possible values are `all`, `rise`, `fall`, and `ignore`.
17	`maxsamples=16`	Maximum number of sampled events to be processed during the sampled analysis.
18	`extrasampletimepoints=[...]`	Additional time points for sampled PTV analysis.

Output parameters

19	`sidevec=[...]`	Array of relevant sidebands for the analysis.
20	`maxsideband=7`	An alternative to the `sidebands` array specification, which automatically generates the array: [-maxsideband ... 0 ... +maxsideband]. For shooting analysis, the default value is `7`. For HB small-signal analysis, the default value is the `harms/maxharms` setting in the HB large signal analysis. It is ignored in HB small signal when it is more than the `harms/maxharms` value of large signal.
21	`freqaxis`	Specifies whether the results should be printed as per the input frequency, the output frequency, or the absolute value of the output frequency. Default is `absout`. Possible values are `absout`, `out` and `in`.
22	`save`	Signals to output. Possible values are `all`, `lvl`, `allpub`, `lvlpub`, `selected`, `none`, and `nooutput`.
23	`nestlvl`	Levels of subcircuits to output.

Convergence parameters

24	`tolerance`	Tolerance for the linear solver. The default value is 1.0e-9 for shooting-based solver and 1.0e-4 for harmonic balance-based solver.
25	`relativeTol`	Relative tolerance for harmonic balance-based linear solver. The default value is 1.0e-2.

© 2003-2020 All Rights Reserved.

26	`resgmrescycle=short`	Restarts GMRES cycle. Possible values are `instant`, `short`, `long`, `recycleinstant`, `recycleshort`, `recyclelong`, and `custom`.
27	`hbprecond_solver=autoset`	Select a linear solver for the GMRES preconditioner. Default is `autoset`. With `autoset`, the simulator will automatically select the appropriate preconditioner. The preconditioner affects the rate of convergence of the linear matrix solver used in periodic small-signal analysis. When `autoset` is selected, the simulator may decide to switch to a different preconditioner after the analysis begins. When that happens, the simulator may issue a warning instructing you to choose a different preconditioner during subsequent runs. Although not required, choosing a different preconditioner according to the simulator's instructions may speed up subsequent analyses. Possible values are `basicsolver`, `blocksolver`, `autoset`, `blockdense`, and `blocksolver2`.
28	`lowmem=0`	Harmonic balance low memory mode. Possible values are `0`, `1`, or number (>=10). The default value is `0`, it indicates that the low memory mode is turned off; if `1` is set, the standard low memory mode is turned on; If a number greater that or equal to `10` is set, Spectre interprets the value as memory requested in Gigabytes.
29	`krylov_size=200`	The maximum iteration count of the linear matrix solver used in periodic small-signal analysis. After reaching `1.25*krylov_size` iterations, the iteration is forced to terminate because of the poor rate of convergence. Increase the `krylov_size` if the simulation reports insufficient norm reduction errors in GMRES.

Annotation parameters

30	`annotate=sweep`	Degree of annotation. Possible values are `no`, `title`, `sweep`, `status`, `steps`, and `detailed_hb`.
31	`title`	Analysis title.

© 2003-2020 All Rights Reserved.

Modulation conversion parameters

32	`modulated=no`	Compute transfer functions/conversion between modulated sources and outputs. Possible values are `single`, `first`, `second`, and `no`.
33	`inmodharmnum=1`	Harmonic value for the PAC input source modulation.
34	`outmodharmvec=[...]`	Harmonic list for the PAC output modulations.
35	`moduppersideband=1`	Index of the upper sideband included in the modulation of an output for PAC or an input for PXF.
36	`modsource`	Refer the output noise to this component.
37	`perturbation=linear`	The type of PAC analysis. The default is linear for normal PAC analysis. im2ds stands for im2 distortion summary and ds stands for distortion summary. Possible values are `linear`, `ds`, `ip3`, `ip2`, `im2ds`, `multiple_beat`, and `triple_beat`.
38	`flin_out=0 Hz`	Frequency of linear output signal.
39	`fim_out=0 Hz`	Frequency of IM output signal.
40	`out1="NULL"`	Output signal 1.
41	`out2="NULL"`	Output signal 2.
42	`contriblist="NULL"`	Array of device names for distortion summary. When `contriblist[""]`, distortion from each non-linear device is calculated.
43	`maxharm_nonlin=4`	Maximum harmonics of input signal frequency induced by non-linear effect.
44	`rfmag=0`	RF source magnitude.
45	`rfdbm=0`	RF source dBm.
46	`rf1_src="NULL"`	Array of RF1 source names for IP3/IP2/IM2.
47	`rf2_src="NULL"`	Array of RF2 source names for IP3/IP2/IM2.
48	`rf_src="NULL"`	Array of RF source names for triple beat analysis. Triple beat is not supported in shooting engine, PSS must be run before PAC with `flexbalance=yes` or `harmonicbalance=yes`.

© 2003-2020 All Rights Reserved.

49	`freqs=NULL`	Array of RF source frequencies for triple beat analysis. Triple beat is not supported in shooting engine, PSS must be run before PAC with `flexbalance=yes` or `harmonicbalance=yes`.
50	`rfampls=NULL`	RF source amplitudes; the units are dBm for ports, Voltage for v-sources and Ampere for i-sources.

You can select the set of periodic small-signal output frequencies of interest by setting either the `maxsideband` or the `sidevec` parameter. When there is only one tone in HB analysis, sidebands are n integer numbers, K1, K2, ..., Kn, and the output frequency at each sideband is computed as follows:

```
f(out)= f(in) + Ki * fund(hb)
```

where `f(in)` represents the (possibly swept) input frequency and `fund(hb)` represents the fundamental frequency used in the corresponding HB analysis. Thus, when analyzing a down-converting mixer, while sweeping the RF input frequency, the most relevant sideband for IF output is Ki= -1. When simulating an up-converting mixer, while sweeping IF input frequency, the most relevant sideband for RF output is Ki= 1. By setting the `maxsideband` value to Kmax, all 2 * Kmax + 1 sidebands from -Kmax to +Kmax are generated.

When there are multiple tones in HB analysis, sidebands are vectors. Consider that you have one large tone and one moderate tone in HB. A sideband, K1, is represented as [K1_1 K1_2]. Corresponding frequency is as follows:

`K1_1 * fund(large tone of HB) + K1_2 * fund`(moderate tone of HB)

The assumption is that there are L large and moderate tones in HB analysis and a given set of n integer vectors representing the sidebands, K1 = { K1_1, ..., K1_j, ..., K1_L}, K2, ..., Kn. The output frequency at each sideband is computed as follows:

```
f(out)= f(in) + SUM_j=1_to_L{Ki_j * fund_j(hb)},
```

where `f(in)` represents the (possibly swept) input frequency, and `fund_j(hb)` represents the fundamental frequency used in the corresponding HB analysis. Therefore, when analyzing a down-converting mixer, while sweeping the RF input frequency, the most relevant sideband for IF output is { -1, 0}. When simulating an up-converting mixer, while sweeping IF input frequency, the most relevant sideband for RF output is { 1, 0}. You enter `sidevec` as a sequence of integer numbers, separated by spaces. The set of vectors {1 1 0} {1 -1 0} {1 1 1} becomes sidevec=[1 1 0 1 -1 0 1 1 1]. For `maxsideband`, only the large tone, which is the first fundamental, is affected by this entry. All the other tones, which are the moderate tones, are limited by `maxharms` specified for an HB analysis. Given `maxharms=[k1max k2max`

© 2003-2020 All Rights Reserved.

`... knmax]` in HB and `maxsideband=Kmax`, all `(2*Kmax + 1)*(2*k2max+1)*(2*k3max+1) *...*(2*knmax+1)` sidebands are generated.

The number of requested sidebands changes the simulation time substantially.

With HBAC, the frequency of the stimulus and of the response are usually different (this is an important area in which HBAC differs from AC). The `freqaxis` parameter is used to specify whether the results should be output versus the input frequency (`in`), the output frequency (`out`), or the absolute value of the output frequency (`absout`).

You can specify sweep limits by specifying the end points or the center value and span of the sweep. Steps can be linear or logarithmic, and you can specify the number of steps or the size of each step. You can specify a step size parameter (`step`, `lin`, `log`, or `dec`) to determine whether the sweep is linear or logarithmic. If you do not specify a step size parameter, the sweep is linear when the ratio of stop to start values is less than 10 and logarithmic when this ratio is 10 or greater. Alternatively, you can use the `values` parameter to specify the values that the `sweep` parameter should take. If you provide both a specific set of values and a set specified using a sweep range, the two sets are merged and collated before being used. All frequencies are in Hertz.

Parameter Index

In the following index, the number corresponding to each parameter name indicates where to find the description of that parameter:

annotate 30	lin 6	perturbation 37	sidevec 19
center 3	log 8	ptvtype 13	span 4
contriblist 42	lowmem 28	relativeTol 25	start 1
crossingdirection 16	maxharm_nonlin 43	relharmvec 12	step 5
dec 7	maxsamples 17	resgmrescycle 26	stop 2
extrasampletimepoints 18	maxsideband 20	rf1_src 46	sweeptype 11
fim_out 39	modsource 36	rf2_src 47	thresholdvalue 15

© 2003-2020 All Rights Reserved.

flin_out 38
modulated 32
rf_src 48
title 31
freqaxis 21
moduppersideband 35
rfampls 50
tolerance 24
freqs 49
nestlvl 23
rfdbm 45
values 9
hbprecond_solver 27
out1 40
rfmag 44
valuesfile 10
inmodharmnum 33
out2 41
sampleprobe 14
krylov_size 29
outmodharmvec 34
save 22

© 2003-2020
All Rights Reserved.

HB Noise Analysis (hbnoise)

Description

The Periodic or Quasi-Periodic Noise (HBNOISE) analysis is similar to the conventional noise analysis, except that HBNOISE analysis includes frequency conversion effects. Hence, it is useful for predicting the noise behavior of mixers, switched-capacitor filters, and other periodically or quasi-periodically driven circuits. It is particularly useful for predicting the phase noise of autonomous circuits, such as oscillators.

HBNOISE analysis linearizes the circuit about the periodic or quasi-periodic operating point computed in the prerequisite HB analysis. It is the periodically or quasi-periodically time-varying nature of the linearized circuit that accounts for the frequency conversion. In addition, the effect of a periodically or quasi-periodically time-varying bias point on the noise generated by the various components in the circuit is also included.

The time-average of the noise at the output of the circuit is computed in the form of a spectral density versus frequency. The output of the circuit is specified with either a pair of nodes or a probe component. To specify the output of a circuit with a probe, specify it using the `oprobe` parameter. If the output is voltage (or potential), choose a `resistor` or `port` as the output probe. If the output is current (or flow), choose a `vsource` or `iprobe` as the output probe.

If the input-referred noise or noise figure is desired, specify the input source using the `iprobe` parameter. For input-referred noise, use either a `vsource` or `isource` as the input probe; for noise figure, use a `port` as the probe. Currently, only a `vsource`, an `isource`, or a `port` can be used as an input probe. If the input source is noisy, as is a `port`, the noise analysis computes the noise factor (F) and noise figure (NF). To match the IEEE definition of noise figure, the input probe must be a port with no excess noise and its `noisetemp` must be set to 16.85C (290K). In addition, the output load must be a `resistor` or `port` and must be identified as the `oprobe`.

If `port` is specified as the input probe, both input-referred noise and gain are referred back to the equivalent voltage source inside the port. S-parameter analysis calculates those values in traditional sense.

The reference sideband (`refsideband`) specifies which conversion gain is used when computing input-referred noise, noise factor, and noise figure. The reference sideband specifies the input frequency relative to the output frequency with:

```
|f(input)| = |f(out) + refsideband frequency shift|.
```

For periodic noise (only one tone in HB analysis), `refsideband` is a number. Use `refsideband=0` when the input and output of the circuit are at the same frequency, such as

© 2003-2020 All Rights Reserved.

with amplifiers and filters. When `refsideband` differs from 0, the single side-band noise figure is computed.

While for quasi-periodic noise (multiple tones in HB analysis), reference sidebands are vectors. Assume that there is one large tone and one moderate tone in HB. A sideband Ki is a vector [Ki_1 Ki_2]. It gives the frequency at:

```
Ki_1 * fund(large tone of HB) + Ki_2 * fund(moderate tone of HB)
```

Use `refsideband=[0 0 ...]` when the input and output of the circuit are at the same frequency, such as with amplifiers and filters.

The reference sideband option (`refsidebandoption`) specifies whether to consider the input at the frequency or the input at the individual quasi-periodic sideband specified.

Note: Different sidebands can lead to the same frequency.

The noise analysis always computes the total noise at the output, which includes contributions from the input source and the output load. The amount of the output noise that is attributable to each noise source in the circuit is also computed and output individually. If the input source is identified (using iprobe) and is a vsource or isource, the input-referred noise is computed, which includes the noise from the input source itself. Finally, if the input source is identified (using iprobe) and is noisy, as is the case with ports, the noise factor and noise figure are computed. Therefore, if:

No = total output noise

Ns = noise at the output due to the input probe (the source)

Nsi = noise at the output due to the image harmonic at the source

Nso = noise at the output due to harmonics other than input at the source

Nl = noise at the output due to the output probe (the load)

IRN = input referred noise

G = gain of the circuit

F = noise factor

NF = noise figure

Fdsb = double sideband noise factor

NFdsb = double sideband noise figure

© 2003-2020 All Rights Reserved.

Fieee = IEEE single sideband noise factor

NFieee = IEEE single sideband noise figure

Then:

IRN = sqrt(No^2/G^2)

F = (No^2 - Nl^2)/Ns^2

NF = 10*log10(F)

Fdsb = (No^2 - Nl^2)/(Ns^2+Nsi^2)

NFdsb = 10*log10(Fdsb)

Fieee = (No^2 - Nl^2 - Nso^2)/Ns^2

NFieee = 10*log10(Fieee).

When the results are output, No is named `out`, IRN is named `in`, G is named `gain`, F, NF, Fdsb, NFdsb, Fieee, and NFieee are named `F`, `NF`, `Fdsb`, `NFdsb`, `Fieee`, and `NFieee` respectively.

The computation of gain and IRN for quasi-periodic noise in HBNOISE assumes that the circuit under test is impedance-matched to the input source. This can introduce inaccuracy into the gain and IRN computation.

An HBNOISE analysis must follow an HB analysis.

Note: Unlike other analyses in Spectre, this analysis can only sweep frequency.

For information on how to run HB noise analysis from ADE, see *Harmonic Balance Noise Analysis (hbnoise)* in the *Spectre Circuit Simulator and Accelerated Parallel Simulator RF Analysis User Guide*.

Definition

```
Name  [p]  [n] ... hbnoise parameter=value ...
```

The optional terminals (p and n) specify the output of the circuit. If you do not specify the terminals, you must specify the output with a probe component.

Parameters

© 2003-2020 All Rights Reserved.

Sweep interval parameters

1	`start=0`	Start sweep limit.
2	`stop`	Stop sweep limit.
3	`center`	Center of sweep.
4	`span=0`	Sweep limit span.
5	`step`	Step size, linear sweep.
6	`lin=50`	Number of steps, linear sweep.
7	`dec`	Points per decade.
8	`log=50`	Number of steps, log sweep.
9	`values=[...]`	Array of sweep values.
11	`valuesfile`	Name of the file containing the sweep values.
11	`sweeptype=unspecified`	Specifies if the sweep frequency range is the absolute frequency of input or if it is relative to the port harmonics. When the unspecified value is used, Spectre RF sweeps using relative when autonomous simulation is performed or when the analysis is PSP; for other cases Spectre RF sweeps the absolute value of the input. Possible values are `absolute`, `relative`, and `unspecified`.
12	`relharmvec=[...]`	Sideband - vector of HB harmonics to which relative frequency sweep should be referenced.

Probe parameters

13	`oprobe`	Compute total noise at the output defined by this component.
14	`iprobe`	Refer the output noise to this component.
15	`refsideband=[...]`	Conversion gain associated with this sideband is used when computing input-referred noise or noise figure.
16	`refsidebandoption=individual`	Whether to view the sideband as a specification of a frequency or a specification of an individual sideband. Possible values are `freq` and `individual`.

© 2003-2020 All Rights Reserved.

Sampled analysis parameters

17	`ptvtype=timeaveraged`	Specifies whether the PTV analysis will be traditional or sampled under certain conditions. Possible values are `timeaveraged` and `sampled`.
18	`extrasampletimepoints=[...]`	Additional time points for sampled PTV analysis.
19	`sampleprobe`	The crossing event at this port triggers the sampled small signal computation.
20	`noiseskipcount=-1`	Calculate time-domain noise on only one of every `noiseskipcount` time points. When < 0, the parameter is ignored. When >=0, the simulator uses this parameter and ignores `numberofpoints`.
21	`noisetimepoints=[...]`	Additional time points for time-domain noise analysis.
22	`numberofpoints=5`	Number of time points of interest in the period where time domain PSD is calculated. Simulator divides the period evenly into N segments (N=numberofpoints) and calculates time domain PSD on the starting time point of each segment. When < 0, the parameter is ignored.
23	`thresholdvalue=0`	Sampled measurement is done when the signal crosses this value.
24	`crossingdirection=all`	‘Specifies the transitions for which sampling must be done. Possible values are `all`, `rise`, `fall`, and `ignore`.
25	`maxsamples=16`	Maximum number of sampled events to be processed during the sampled analysis.
26	`measurement=NULL`	Specifies the jitter event list that will be measured.

Output parameters

27	`noisetype=timeaverage`	Specifies the computation of time-averaged or time-sampled noise information. Possible values are `timeaverage`, `correlations`, `timedomain`, `pmjitter`, and `sampled`.

© 2003-2020 All Rights Reserved.

28	`maxsideband=7`	This parameter determines the maximum sideband included when computing noise, that is, either up-converted or down-converted to the output by the periodic drive signal. This parameter also determines the size of the small signal system when hbnoise is performed. This parameter is critical for the accuracy of hbnoise analysis. Using a small `maxsideband` may cause accuracy loss. The default value is the `harms/maxharms` setting in the HB large signal analysis.
29	`noiseout=usb`	Specify the noise output. You can set a vector like `noiseout=[usb am pm]`. All of these use the single sideband (SSB) convention, which is half of the total power. Possible values are `usb`, `lsb`, `am`, and `pm`.
30	`sidevec=[...]`	Array of relevant sidebands for the analysis.
31	`save`	Signals to output. This option specifies the signals to be saved in the result. Possible values are `all`, `lvl`, `allpub`, `lvlpub`, and `selected`. ■ `allpub` saves all signals at all levels of hierarchy in the schematic, including the internal signals of device models. ■ `all` works like `allpub`. ■ `lvl` saves all signals through the level of hierarchy set in `nestlvl` option. ■ `lvlpub` works like `lvl`. ■ `selected` is not recommended to use here.
32	`nestlvl`	Levels of subcircuits to output.
33	`saveallsidebands=no`	Save noise contributors by sideband. Possible values are `no` and `yes`.
34	`output_xf=no`	If set to `no`, there are no xf results output in hbnoise. Possible values are `no` and `yes`.
35	`stimuli=sources`	Stimuli used for XF analysis in hbnoise. Possible values are `sources` and `nodes_and_terminals`.
36	`separatenoise=no`	Separate noise into sources and transfer functions. Possible values are `no` and `yes`.

© 2003-2020 All Rights Reserved.

37	`cyclo2txtfile=no`	Output cyclo-stationary noise to text file as input source of next stage. Possible values are `no` and `yes`.

Convergence parameters

38	`tolerance`	Tolerance for linear solver. The default value is 1.0e-9 for shooting-based solver and 1.0e-4 for harmonic balance-based solver.
39	`relativeTol`	Relative tolerance for harmonic balance-based linear solver. The default value is 1.0e-2.
40	`resgmrescycle=short`	Restarts GMRES cycle. Possible values are `instant`, `short`, `long`, `recycleinstant`, `recycleshort`, `custom` and `recyclelong`.
41	`hbprecond_solver=autoset`	Select a linear solver for the GMRES preconditioner. Default is `autoset`. With `autoset`, the simulator will automatically select the appropriate preconditioner. The preconditioner affects the rate of convergence of the linear matrix solver used in periodic small-signal analysis.When `autoset` is selected, the simulator may decide to switch to a different preconditioner after the analysis begins. When that happens, the simulator may issue a warning instructing you to choose a different preconditioner during subsequent runs. Although not required, choosing a different preconditioner according to the simulator's instructions may speed up subsequent analyses. Possible values are `basicsolver`, `blocksolver`, `autoset`, `blockdense`, and `blocksolver2`.
42	`lowmem=0`	Harmonic balance low memory mode. Possible values are `0`, `1`, or number (>=10). The default value is `0`, it indicates that the low memory mode is turned off; if `1` is set, the standard low memory mode is turned on; If a number greater that or equal to `10` is set, Spectre interprets the value as memory requested in Gigabytes.
43	`ppv=no`	If set to `yes`, save the oscillator PPV after performing noise analysis. Possible values are `no` and `yes`.

© 2003-2020 All Rights Reserved.

44	`augmented=yes`	If set to `yes`, the frequency-aware PPV method is used to calculate the total noise of the oscillator; if set to `pmonly`, only the PM part of the oscillator noise is calculated; if set to `amonly`, only the AM part of the oscillator noise is calculated. The output of AM/PM noise uses the double sideband convention. Possible values are `no`, `yes`, `pmonly`, and `amonly`. **Note:** This parameter will be removed in a future release. It is recommended to use the `noiseout` parameter.
45	`lorentzian=cornerfreqonly`	This option determines if the Lorentzian plot is used in the oscillator noise analysis. Possible values are `no`, `cornerfreqonly` and `yes`.
46	`krylov_size=200`	The maximum iteration count of the linear matrix solver used in periodic small-signal analysis. After reaching `1.25*krylov_size` iterations, the iteration is forced to terminate because of the poor rate of convergence. Increase the `krylov_size` if the simulation reports insufficient norm reduction errors in GMRES.

*Annotation parameters*4

47	`annotate=sweep`	Degree of annotation. Possible values are `no`, `title`, `sweep`, `status`, `steps`, and `detailed_hb`.
48	`title`	Analysis title.
49	`oscmacrogene=no`	If set to `yes`, harmonic balance steady-state and phase noise data are saved. Applies only if there is pm noise out. Possible values are `no` and `yes`.
50	`oscmacrosave`	File to which harmonic balance steady-state solution and phase noise data are to be written.

In practice, noise can mix with each of the harmonics of the periodic drive signal applied in the HB analysis and end up at the output frequency. However, the HBNOISE analysis includes only the noise that mixes with a finite set of harmonics that are typically specified using the `maxsideband` parameter.

If Ki represents sideband i, then for periodic noise:

© 2003-2020 All Rights Reserved.

```
f(noise_source) = f(out) + Ki * fund(hb)
```

For quasi-periodic noise with multi-tone in HB analysis, assuming that there is one large tone and one moderate tone, Ki is represented as [Ki_1 Ki_2]. Corresponding frequency shift is as follows:

```
Ki_1 * fund(large tone of HB) + Ki_2 * fund(moderate tone of HB)
```

If there are L large and moderate tones in HB analysis and a set of n integer vectors representing the sidebands, then:

```
f(noise_source) = f(out) +  SUM_j=1_to_L{ Ki_j * fund_j(hb) }
```

The `maxsideband` parameter specifies the maximum |Ki| included in the HBNOISE calculation. For quasi-periodic noise, only the large tone, which is the first fundamental, is affected by this entry. All the other tones, which are the moderate tones, are limited by `maxharms` specified for an HB analysis.

The number of requested sidebands changes the simulation time substantially.

You can designate a voltage to be the output by specifying a pair of nodes on the HBNOISE analysis statement or by using the `oprobe` parameter. Any component with two or more terminals can be a voltage probe. When there are more than two terminals, they are grouped in pairs, and you use the `portv` parameter to select the appropriate pair.

Any component that naturally computes current as an internal variable can be a current probe. If the probe component computes more than one current, you use the `porti` parameter to select the appropriate current. You must not specify both `portv` and `porti`. If you specify neither, the probe component provides a reasonable default.

You can use the `stimuli` parameter to specify what serves as the inputs for the transfer functions. There are two choices: `stimuli=sources` and `stimuli=nodes_and_terminals`.

`stimuli=sources` indicates that the sources present in the circuit are to be used. You can use the `xfmag` parameters provided by the sources to adjust the computed gain to compensate for gains or losses in a test fixture. You can limit the number of sources in hierarchical netlists by using the `save` and `nestlvl` parameters.

`stimuli=nodes_and_terminals` indicates that all possible transfer functions are to be computed. This is useful when it is not known in advance which transfer functions are interesting. Transfer functions for nodes are computed assuming that a unit magnitude flow (current) source is connected from the node to ground. Transfer functions for terminals are computed assuming that a unit magnitude value (voltage) source is connected in series with the terminal. By default, the transfer functions from a small set of terminals are computed. If

© 2003-2020 All Rights Reserved.

you want transfer functions from specific terminals, specify the terminals in the save statement. You must use the `:probe` modifier (for example, Rout:1:probe), or specify `useprobes=yes` on the options statement. If you want transfer functions from all terminals, specify `currents=all` and `useprobes=yes` on the options statement.

You can specify sweep limits by specifying the end points, or the center value and span of the sweep. Steps can be linear or logarithmic, and you can specify the number of steps or the size of each step. You can specify a step size parameter (`step`, `lin`, `log`, or `dec`) to determine whether the sweep is linear or logarithmic. If you do not specify a step size parameter, the sweep is linear when the ratio of stop to start values is less than 10 and logarithmic when this ratio is 10 or greater. Alternatively, you can use the values parameter to specify the values that the sweep parameter should take. If you provide both a specific set of values and a set specified using a sweep range, the two sets are merged and collated before being used. All frequencies are in Hertz.

Parameter Index

In the following index, the number corresponding to each parameter name indicates where to find the description of that parameter:

annotate 47
augmented 44
center 3
crossingdirection 24
cyclo2txtfile 37
dec 7
extrasampletimepoints 18
hbprecond_solver 41
iprobe 14
lowmem 42
maxsamples 25
maxsideband 28
measurement 26
nestlvl 32
noiseout 29
noiseskipcount 20
noisetimepoints 21
noisetype 27
output_xf 34
ppv 43
ptvtype 17
refsideband 15
refsidebandoption 16
relativeTol 39
relharmvec 12
resgmrescycle 40
sampleprobe 19
span 4
start 1
step 5
stimuli 35
stop 2
sweeptype 11
thresholdvalue 23
title 48
tolerance 38

© 2003-2020 All Rights Reserved.

krylov_size 46
lin 6
log 8
lorentzian 45
numberofpoints 22
oprobe 13
oscmacrogene 49
oscmacrosave 50
save 31
saveallsidebands 33
separatenoise 36
sidevec 30
values 9
valuesfile 10

© 2003-2020
All Rights Reserved.

HB S-Parameter Analysis (hbsp)

Description

The periodic or quasi-periodic SP (HBSP) analysis is used to compute scattering and noise parameters for n-port circuits such as mixers that exhibit frequency translation. It is a small-signal analysis similar to SP analysis, except that in HBAC and HBNOISE, the circuit is first linearized about a periodically varying operating point as opposed to a simple DC operating point. Linearizing about a periodically or quasi-periodically time-varying operating point allows the computation of S-parameters between circuit ports that convert signals from one frequency band to another. HBSP can also calculate noise parameters in frequency-converting circuits. In addition, HBSP computes noise figure (both single-sideband and double-sideband), input referred noise, equivalent noise parameters, and noise correlation matrices. Similar to HBNOISE, but unlike SP, the noise features of the HBSP analysis include noise folding effects due to the periodic time-varying nature of the circuit.

Computing the n-port S-parameters and noise parameters of a periodically varying circuit is a two-step process. First, the small stimulus is ignored and the periodic or quasi-periodic steady-state response of the circuit to possibly large periodic stimulus is computed using HB analysis. As part of the HB analysis, the periodically time-varying representation of the circuit is computed and saved for later use. The second step is to apply small-signal excitations to compute the n-port S-parameters and noise parameters. This is done using the HBSP analysis. HBSP analysis cannot be used independently; it must follow HB analysis. However, any number of periodic small-signal analyses such as HBAC, HBSP, HBNOISE, can follow an HB analysis.

Note: Unlike other analyses in Spectre, this analysis can only sweep frequency.

For information on how to run HB noise analysis from ADE, see *hbSP Analysis* in the *Spectre Circuit Simulator and Accelerated Parallel Simulator RF Analysis User Guide*.

Definition

```
Name hbsp parameter=value ...
```

Parameters

© 2003-2020 All Rights Reserved.

Sweep interval parameters

1	`start=0`	Start sweep limit.
2	`stop`	Stop sweep limit.
3	`center`	Center of sweep.
4	`span=0`	Sweep limit span.
5	`step`	Step size, linear sweep.
6	`lin=50`	Number of steps, linear sweep.
7	`dec`	Points per decade.
8	`log=50`	Number of steps, log sweep.
9	`values=[...]`	Array of sweep values.
10	`valuesfile`	Name of the file containing the sweep values.
11	`sweeptype=unspecified`	Specifies if the sweep frequency range is the absolute frequency of input or if it is relative to the port harmonics. When the unspecified value is used, Spectre RF sweeps using relative when autonomous simulation is performed or when the analysis is PSP; for other cases Spectre RF sweeps the absolute value of the input. Possible values are `absolute`, `relative`, and `unspecified`.

Port parameters

12	`ports=[...]`	List of active ports. Ports are numbered in the specified order. For noise figure computation, the input is considered as port 1 and the output as port 2.
13	`portharmsvec=[...]`	List of harmonics that are active on specified list of ports. Must have a one-to-one correspondence with the `ports` vector.
14	`harmsvec=[...]`	List of harmonics, in addition to the ones associated with specific ports by `portharmsvec`, that are active.

© 2003-2020 All Rights Reserved.

Output parameters

15	`freqaxis`	Specifies whether the results should be printed as per the input frequency, the output frequency, or the absolute value of the input frequency. Default is `in`. Possible values are `absin`, `in`, and `out`.
16	`file`	Name of the output file. It just supports S-parameters in PSP, HBSP, and QPSP analyses.
17	`datafmt=spectre`	Data format of the S-parameter output file. Possible values are `spectre`, `touchstone`, and `touchstone2`.
18	`datatype=realimag`	Data type of the S-parameter output file. Possible values are `realimag`, `magphase`, and `dbphase`.

Noise parameters

19	`donoise=yes`	Perform noise analysis. If `oprobe` is specified as a valid port, this parameter is set to `yes`, and a detailed noise output is generated. Possible values are `no` and `yes`.

Probe parameters

20	`maxsideband=7`	This parameter determines the maximum sideband that is included when computing noise, that is either up-converted or down-converted to the output by the periodic drive signal. The parameter also determines the size of the small signal system when hbnoise is performed. This parameter is critical for the accuracy of hbnoise analysis. Using a small `maxsideband` may cause accuracy loss. The default value is the `harms/maxharms` setting in the HB large signal analysis.

© 2003-2020 All Rights Reserved.

Convergence parameters

21	`tolerance`	Tolerance for linear solver. The default value is 1.0e-9 for shooting-based solver and 1.0e-4 for harmonic balance-based solver.
22	`relativeTol`	Relative tolerance for harmonic balance-based linear solver. Default value is 1.0e-2.
23	`hbprecond_solver=autoset`	Select a linear solver for the GMRES preconditioner. Default is `autoset`. With `autoset`, the simulator automatically selects the appropriate preconditioner. The preconditioner affects the rate of convergence of the linear matrix solver used in periodic small-signal analysis. When `autoset` is selected, the simulator may decide to switch to a different preconditioner after the analysis begins. When that happens, the simulator may issue a warning instructing you to choose a different preconditioner during subsequent runs. Although not required, choosing a different preconditioner according to the simulator's instructions may speed up subsequent analyses. Possible values are `basicsolver`, `blocksolver`, `autoset`, `blockdense`, and `blocksolver3`.
24	`lowmem=0`	Harmonic balance low memory mode. Possible values are `0`, `1`, or number (>=10). The default value is `0`, it indicates that the low memory mode is turned off; if `1` is set, the standard low memory mode is turned on; If a number greater that or equal to `10` is set, Spectre interprets the value as memory requested in Gigabytes.
25	`krylov_size=200`	The maximum iteration count of the linear matrix solver used in periodic small-signal analysis. After reaching `1.25*krylov_size` iterations, the iteration is forced to terminate because of the poor rate of convergence. Increase the `krylov_size` if the simulation reports insufficient norm reduction errors in GMRES.

© 2003-2020 All Rights Reserved.

Annotation parameters

26	`annotate=sweep`	Degree of annotation. Possible values are `no`, `title`, `sweep`, `status`, `steps`, and `detailed_hb`.
27	`title`	Analysis title.

To specify the HBSP analysis, the port and port harmonic relations must be specified. You can select the ports of interest by setting the `port` parameter, and select the set of periodic small-signal output frequencies of interest by setting `portharmsvec` or `harmsvec` parameters. For a given set of n integer numbers representing the harmonics K1, K2, ... Kn, the scattering parameters at each port are computed at the following frequencies:

For periodic SP in one-tone HB analysis, frequency is:

```
f(scattered)= f(rel) + Ki * fund(HB)
```

For quasi-periodic noise with multi-tone in HB analysis, sidebands are vectors. Consider that you have one large tone and one moderate tone in HB. Then, the above sideband K1 will be represented as [K1_1 K1_2]. In this case, the corresponding frequency is:

```
K1_1 * fund(large tone of HB) + K1_2 * fund(moderate tone of HB)=
SUM_j=1_to_L{Ki_j * fund_j(HB)}
```

If there are L (1 large plus L-1 moderate) tones in HB analysis and a given set of n integer vectors representing the sidebands:

```
K1 = { K1_1,...K1_j..., K1_L } , K2, ... Kn
```

If you specify the relative frequency, the scattering parameters at each port are computed at the frequencies:

```
f(scattered)= f(rel) + SUM_j=1_to_L{Ki_j * fund_j(hb)},
```

where `f(rel)` represents the relative frequency of a signal incident on a port, `f(scattered)` represents the frequency to which the relevant scattering parameter represents the conversion, and `fund`(one-tone HB) or `fund_j`(multi-tone HB) represents the fundamental frequency used in the corresponding HB analysis.

During analysis of a down-converting mixer with a blocker and the signal in the upper sideband, we sweep the input frequency of the signal coming into RF port. In case of periodic SP with one-tone HB, the most relevant harmonic for RF input is Ki= 1 and for IF output Ki= 0. Therefore, we can associate K2=0 with the IF port and K1=1 with the RF port. S21 represents the transmission of signal from the RF to IF, and S11 represents the reflection of

© 2003-2020 All Rights Reserved.

signal back to the RF port. If the signal was in the lower sideband, a choice of K1=-1 is more appropriate. For quasi-periodic SP with multi-tone HB, the most relevant sideband for this input is Ki= {1 , 0} and for IF output Ki= {0 , 0}. Therefore, we can associate K1={1 , 0} with the RF port and K2={0 , 0} with the IF port. If the signal was in the lower sideband, then a choice of K1={-1 , 0} is more appropriate.

The parameter `portharmsvec` or `harmsvec` can be used to specify the harmonics of interest. If `portharmsvec` is specified, the harmonics must be in one-to-one correspondence with the ports, with each harmonic associated with a single port. If harmonics are specified in the optional `harmsvec` parameter, all possible frequency-translating scattering parameters associated with the specified harmonics are computed.

With HBSP, the frequencies of the input and of the response are usually different (this is an important area in which HBSP differs from SP). Because the HBSP computation involves inputs and outputs at frequencies that are relative to multiple harmonics or sidebands, the `freqaxis` and `sweeptype` parameters behave differently in HBSP than in HBAC and HBNOISE.

The `sweeptype` parameter controls the way the frequencies in the HBSP analysis are swept. Specifying a `relative` sweep indicates the sweep to be relative to the analysis harmonics or port sideband (not the HB fundamental) and specifying an `absolute` sweep indicates the sweep of the absolute input source frequency.

For example, in case of periodic SP with one-tone HB and HB fundamental of 100MHz, `portharmsvec` is set to [9 1] to examine a downconverting mixer. Using `sweeptype=relative` and a sweep range of f(rel)=0->50MHz, S21 represents the strength of signal transmitted from the input port in the range 900->950MHz to the output port at frequencies 100->150MHz. Using `sweeptype=absolute` and sweeping the frequency from 900->950MHz calculates the same quantities, because f(abs)=900->950MHz, f(rel) = f(abs) - K1 * fund(hb) = 0->50MHz, with K1=9, and fund(hb) = 100MHz.

For quasi-periodic noise with multi-tone HB and HB fundamentals of 1000MHz (LO) and 966MHz (blocker in RF channel), `portharmsvec` could be set to [0 1 -1 1] to examine a downconverting mixer. Consider setting `sweeptype=relative` and a sweep range of f(rel)=-10MHz<->10MHz, S21 represents the strength of the signal transmitted from the input port in the range 956->976MHz to the output port at the frequencies 24<->44MHz. Using `sweeptype=absolute` and sweeping the frequency from 966<->976MHz calculates the same quantities, because f(abs)=956<->976MHz, f(rel) = f(abs) - (K1_1 * fund_1(hb) + K1_2 * fund_2(hb)) = -10MHz<->10MHz, with K1_1=0, K1_2=1, fund_1(hb) = 1000MHz, and fund_2(hb) = 966MHz.

The `freqaxis` parameter is used to specify whether the results should be output versus the scattered frequency at the input port (`in`), the scattered frequency at the output port (`out`), or the absolute value of the frequency swept at the input port (`absin`).

© 2003-2020 All Rights Reserved.

HBSP analysis also computes noise figures, equivalent noise sources, and noise parameters. The noise computation, which is skipped only when `donoise=no`, requires additional simulation time. If:

No = total output noise at frequency f

Ns = noise at the output due to the input probe (the source)

Nsi = noise at the output due to the image harmonic at the source

Nso = noise at the output due to harmonics other than input at the source

Nl = noise at the output due to the output probe (the load)

IRN = input referred noise

G = gain of the circuit

F = noise factor (single side band)

NF = noise figure (single side band)

Fdsb = double sideband noise factor

NFdsb = double sideband noise figure

Fieee = IEEE single sideband noise factor

NFieee = IEEE single sideband noise figure

Then:

IRN = sqrt(No^2/G^2)

F = (No^2 - Nl^2)/Ns^2

NF = 10*log10(F)

Fdsb = (No^2 - Nl^2)/(Ns^2+Nsi^2)

NFdsb = 10*log10(Fdsb)

Fieee = (No^2 - Nl^2 - Nso^2)/Ns^2

NFieee = 10*log10(Fieee).

© 2003-2020 All Rights Reserved.

When the results are output, IRN is named `in`, G is named `gain`, F, NF, Fdsb, NFdsb, Fieee, and NFieee are named `F`, `NF`, `Fdsb`, `NFdsb`, `Fieee`, and `NFieee`, respectively.

Note: The gain computed by HBSP is the voltage gain from the actual circuit input to the circuit output, not the gain from the internal port voltage source to the output.

To ensure accurate noise calculations, the `maxsideband` or `sidebands` parameters must be set to include the relevant noise folding effects. `maxsideband` is only relevant to the noise computation features of HBSP.

You can specify sweep limits by specifying the end points or by specifying the center value and span of the sweep. Steps can be linear or logarithmic, and you can specify the number of steps or the size of each step. You can specify a step size parameter (`step`, `lin`, `log`, or `dec`) to determine whether the sweep is linear or logarithmic. If you do not specify a step size parameter, the sweep is linear when the ratio of stop to start values is less than 10, and logarithmic when this ratio is 10 or greater. Alternatively, you can use the `values` parameter to specify the values that the sweep parameter should take. If you provide both a specific set of values and a set specified using a sweep range, the two sets are merged and collated before being used. All frequencies are in Hertz.

Parameter Index

In the following index, the number corresponding to each parameter name indicates where to find the description of that parameter:

annotate 26	freqaxis 15	maxsideband 20	stop 2
center 3	harmsvec 14	portharmsvec 13	sweeptype 11
datafmt 17	hbprecond_solver 23	ports 12	title 27
datatype 18	krylov_size 25	relativeTol 22	tolerance 21
dec 7	lin 6	span 4	values 9
donoise 19	log 8	start 1	valuesfile 10
file 16	lowmem 24	step 5	

© 2003-2020 All Rights Reserved.

HB Stability Analysis (hbstb)

Description

The HBSTB analysis is used to evaluate the local stability of a periodically varying feedback circuit. It is a small-signal analysis like STB analysis, except that the circuit is first linearized about a periodically varying operating point as opposed to a simple DC operating point. Linearizing about a periodically time-varying operating point allows the stability evaluation to include the effect of the time-varying operating point.

Evaluating the stability of a periodically varying circuit is a two-step process. In the first step, the small stimulus is ignored and HB analysis is used to compute the periodic steady-state response of the circuit to a possibly large periodic stimulus. As part of the HB analysis, the periodically time-varying representation of the circuit is computed and saved for later use. In the second step, a probe is used to compute the loop gain of the zero sideband. The local stability can be evaluated using gain margin, phase margin, or a Nyquist plot of the loop gain. To perform HBSTB analysis, a probe instance must be specified as `probe` parameter.

The loop-based algorithm requires that a `probe` be placed on the feedback loop to identify and characterize the particular loop of interest. The introduction of the probe component should not change any of the circuit characteristics. For the time-varying property of the circuit, the loop gain at different places can be different, but all values can be used to evaluate the stability. The loop-based algorithm provides stability information for single-loop circuits and for multi-loop circuits in which a `probe` component can be placed on a critical wire to break all loops. For a typical multi-loop circuit, such a critical wire may not be available. The loop-based algorithm can be used only on individual feedback loops to ensure that they are stable.

The device based algorithm requires the `probe` be a gain instant, such as a bjt transistor or a mos transistor. The device-based algorithm evaluates the loop gain around the `probe`, which can be involved in mutiloops.

Note: Note: Unlike other analyses in Spectre, this analysis can only sweep frequency.

For information on how to run HBSTB analysis from ADE, see *Harmonic Balance Stability Analysis (HBSTB)*in the *Spectre Circuit Simulator and Accelerated Parallel Simulator RF Analysis User Guide*.

Definition

```
Name hbstb parameter=value ...
```


© 2003-2020 All Rights Reserved.

Parameters

Sweep interval parameters

1	`start=0`	Start sweep limit.
2	`stop`	Stop sweep limit.
3	`center`	Center of sweep.
4	`span=0`	Sweep limit span.
5	`step`	Step size, linear sweep.
6	`lin=50`	Number of steps, linear sweep.
7	`dec`	Points per decade.
8	`log=50`	Number of steps, log sweep.
9	`values=[...]`	Array of sweep values.
10	`valuesfile`	Name of the file containing the sweep values.

Probe parameters

11	`probe`	Probe instance around which the loop gain is calculated.
12	`localgnd`	Node name of local ground. If not specified, the probe is referenced to global ground.

Output parameters

13	`save`	Signals to output. Possible values are `all`, `lvl`, `allpub`, `lvlpub`, `selected`, `none`, and `nooutput`.
14	`nestlvl`	Levels of subcircuits to output.

© 2003-2020 All Rights Reserved.

Convergence parameters

15	`tolerance`	Tolerance for linear solver. The default value is 1.0e-9 for shooting-based solver and 1.0e-4 for harmonicbalance-based solver.
16	`relativeTol`	Relative tolerance for harmonic balance-based linear solver. Default value is 1.0e-2.
17	`gear_order=2`	Gear order used for small-signal integration.
18	`solver=turbo`	Solver type. Possible values are `std`, `turbo`, `std_hh`, and `turbo_hh`.
19	`oscsolver=turbo`	Oscillator solver type. It is recommended that you use ira for huge circuits. Possible values are `std`, `turbo`, `ira`, and `direct`.
20	`resgmrescycle=short`	Restarts GMRES cycle. Possible values are `instant`, `short`, `long`, `recycleinstant`, `recycleshort`, `custom`, and `recyclelong`.
21	`hbprecond_solver=autoset`	Select a linear solver for the GMRES preconditioner. Default is autoset. With autoset, the simulator will automatically select the appropriate precondtioner. The preconditioner affects the rate of convergence of the linear matrix solver used in periodic small-signal analysis. When autoset is selected, the simulator may decide to switch to a different preconditioner after the analysis begins. When that happens, the simulator may issue a warning instructing you to choose a different preconditioner during subsequent runs. Although not required, choosing a different preconditioner according to the simulator's instructions may speed up subsequent analyses. Possible values are `basicsolver`, `blocksolver`, `autoset`, `blockdense`,, and `blocksolver2`.
22	`krylov_size=200`	The maximum iteration count of the linear matrix solver used in periodic small-signal analysis. After reaching `1.25*`krylov_size iterations, the iteration is forced to terminate because of the poor rate of convergence. Increase the krylov_size if the simulation reports insufficient norm reduction errors in GMRES.

© 2003-2020 All Rights Reserved.

Annotation parameters

23	`annotate=sweep`	Degree of annotation. Possible values are `no`, `title`, `sweep`, `status`, `steps`, and `detailed_hb`.
24	`title`	Analysis title.

You can specify sweep limits by specifying the end points, or by specifying the center value and span of the sweep. Steps can be linear or logarithmic, and you can specify the number of steps or the size of each step. You can specify a step size parameter (`step`, `lin`, `log`, or `dec`) to determine whether the sweep is linear or logarithmic. If you do not specify a step size parameter, the sweep is linear when the ratio of stop to start values is less than 10, 10 and logarithmic when this ratio is 10 or greater. Alternatively, you can use the values parameter to specify the values that the sweep parameter should take. If you provide both a specific set of values and a set specified using a sweep range, the two sets are merged and collated before being used. All frequencies are in Hertz.

Parameter Index

In the following index, the number corresponding to each parameter name indicates where to find the description of that parameter.

annotate 23	lin 6	relativeTol 16	step 5
center 3	localgnd 12	resgmrescycle 20	stop 2
dec 7	log 8	save 13	title 24
gear_order 17	nestlvl 14	solver 18	tolerance 15
hbprecond_solver 21	oscsolver 19	span 4	values 9
krylov_size 22	probe 11	start 1	valuesfile 10

© 2003-2020 All Rights Reserved.

HB XF Analysis (hbxf)

Description

A conventional transfer function analysis computes the transfer function from every source in the circuit to a single output. Unlike a conventional AC analysis that computes the response from a single stimulus to every node in the circuit, the Harmonic Balance Transfer Function or HBXF analysis computes the transfer functions from any source at any frequency to a single output at a single frequency. Thus, like HBAC analysis, HBXF analysis includes frequency conversion effects.

The HBXF analysis directly computes such useful quantities as conversion efficiency (transfer function from input to output at required frequency), image and sideband rejection (input to output at undesired frequency), and LO feed-through and power supply rejection (undesired input to output at all frequencies).

As with a HBAC, HBSP, and HBNoise analyses, a HBXF analysis must follow a HB analysis.

Note: Note: Unlike other analyses in Spectre, this analysis can only sweep frequency.

Definition

```
Name  [p]  [n] ... hbxf parameter=value ...
```

The optional terminals (p and n) specify the output of the circuit. If you do not specify the terminals, you must specify the output with a probe component.

For information on how to run HB noise analysis from ADE, see *Harmonic Balance Transfer Function Analysis (HBXF)* in the *Spectre Circuit Simulator and Accelerated Parallel Simulator RF Analysis User Guide*.

Parameters

Sweep interval parameters

1	`start=0`	Start sweep limit.
2	`stop`	Stop sweep limit.
3	`center`	Center of sweep.

© 2003-2020 All Rights Reserved.

4	`span=0`	Sweep limit span.
5	`step`	Step size, linear sweep.
6	`lin=50`	Number of steps, linear sweep.
7	`dec`	Points per decade.
8	`log=50`	Number of steps, log sweep.
9	`values=[...]`	Array of sweep values.
10	`valuesfile`	Name of the file containing the sweep values.
11	`sweeptype=unspecified`	Specifies if the sweep frequency range is the absolute frequency of input or if it is relative to the port harmonics. When the unspecified value is used, Spectre RF sweeps using relative when autonomous simulation is performed or when the analysis is PSP; for other cases Spectre RF sweeps the absolute value of the input. Possible values are `absolute`, `relative`, and `unspecified`.
12	`relharmvec=[...]`	Sideband - vector of HB harmonics - to which relative frequency sweep should be referenced.

Probe parameters

13	`probe`	Compute every transfer function to this probe component.

Sampled analysis parameters

14	`ptvtype=timeaveraged`	Specifies whether the PTV analysis will be traditional or sampled under certain conditions. Possible values are `timeaveraged` and `sampled`.
15	`sampleprobe`	The crossing event at this port triggers the sampled small signal computation.
16	`thresholdvalue=0`	Sampled measurement is done when the signal crosses this value.

© 2003-2020 All Rights Reserved.

17	`crossingdirection=all`	Specifies the transitions for which sampling must be done. Possible values are `all`, `rise`, `fall`, and `ignore`.
18	`maxsamples=16`	Maximum number of sampled events to be processed during the sampled analysis.
19	`extrasampletimepoints=[...]`	Additional time points for sampled PTV analysis.
20	`sampleratio=1`	The ratio between sampled frequency and fund frequency (sampled frequency/fund frequency).

Output parameters

21	`sidevec=[...]`	Array of relevant sidebands for the analysis.
22	`maxsideband`	This parameter determines the maximum sideband that is included when computing noise, that is either up-converted or down-converted to the output by the periodic drive signal. This parameter also determines the size of the small signal system when hbnoise is performed. It is critical for the accuracy of hbnoise analysis. Using a small maxsideband may cause accuracy loss. The default value is the `harms/maxharms` setting in the HB large signal analysis.
23	`freqaxis`	Specifies whether the results should be printed as per the input frequency, the output frequency, or the absolute value of the input frequency. The default is `absin`. Possible values are `absin`, `in`, and `out`.
24	`save`	Signals to output. Possible values are `all`, `lvl`, `allpub`, `lvlpub`, `selected`, `none`, and `nooutput`.
25	`nestlvl`	Levels of subcircuits to output.
26	`stimuli=sources`	Stimuli used for XF analysis in hbnoise. Possible values are `sources` and `nodes_and_terminals`.

© 2003-2020 All Rights Reserved.

Convergence parameters

27	`tolerance`	Tolerance for linear solver. The default value is 1.0e-9 for shooting-based solver and 1.0e-4 for harmonicbalance-based solver.
28	`relativeTol`	Relative tolerance for harmonic balance-based linear solver. Default value is 1.0e-2.
29	`resgmrescycle=short`	Restarts GMRES cycle. Possible values are `instant`, `short`, `long`, `recycleinstant`, `recycleshort`, `custom`, and `recyclelong`.
30	`hbprecond_solver=autoset`	Select a linear solver for the GMRES preconditioner. Default is autoset. With autoset, the simulator will automatically select the appropriate precondtioner. The preconditioner affects the rate of convergence of the linear matrix solver used in periodic small-signal analysis. When autoset is selected, the simulator may decide to switch to a different preconditioner after the analysis begins. When that happens, the simulator may issue a warning instructing you to choose a different preconditioner during subsequent runs. Although not required, choosing a different preconditioner according to the simulator's instructions may speed up subsequent analyses. Possible values are `basicsolver`, `blocksolver`, `autoset`, `blockdense`, and `blocksolver2`.
31	`lowmem=0`	Harmonic balance low memory mode. Possible values are `0`, `1`, or number (>=10). The default value is `0`, it indicates that the low memory mode is turned off; if `1` is set, the standard low memory mode is turned on; If a number greater that or equal to `10` is set, Spectre interprets the value as memory requested in Gigabytes.
32	`lorentzian=cornerfreqonly`	This option determines if the Lorentzian plot is used in the oscillator noise analysis. Possible values are `no`, `cornerfreqonly`, and `yes`.

© 2003-2020 All Rights Reserved.

33	`krylov_size=200`	The maximum iteration count of the linear matrix solver used in periodic small-signal analysis. After reaching `1.25*krylov_size` iterations, the iteration is forced to terminate because of the poor rate of convergence. Increase the krylov_size if the simulation reports insufficient norm reduction errors in GMRES.

Annotation parameters

34	`annotate=sweep`	Degree of annotation. Possible values are `no`, `title`, `sweep`, `status`, `steps`, and `detailed_hb`.
35	`title`	Analysis title.

The variable of interest at the output can be voltage or current, and its frequency is not constrained by the period of the large periodic solution. While sweeping the selected output frequency, you can select the periodic small-signal input frequencies of interest by setting either the `maxsideband` or the `sidevec` parameter. For a given set of n integer numbers representing the sidebands K1, K2, ... Kn, the input signal frequency at each sideband is computed as f(in)= f(out) + Ki * fund(pss), where, f(out) represents the (possibly swept) output signal frequency and funds(HB) represents the fundamental frequencies used in the corresponding HB analysis. Thus, when analyzing a down-converting mixer and sweeping the IF output frequency, Ki= +1 for the RF input represents the first upper-sideband, while Ki= -1 for the RF input represents the first lower-sideband. By setting the `maxsideband` value to Kmax, all 2 * Kmax + 1 sidebands from -Kmax to +Kmax are selected.

The number of requested sidebands does not change substantially the simulation time. However, the `maxacfreq` of the corresponding HB analysis should be set to guarantee that | max{f(in)} | is less than `maxacfreq`; otherwise, the computed solution might be contaminated by aliasing effects. The HBXF simulation is not executed for | f(out) | greater than `maxacfreq`. Diagnostic messages are printed for those extreme cases, indicating how `maxacfreq` should be set in the HB analysis. In majority of simulations, however, this is not an issue, because `maxacfreq` is never allowed to be smaller than 40x the HB fundamental.

With HBXF, the frequency of the stimulus and of the response are usually different (this is an important area in which HBXF differs from XF). The `freqaxis` parameter is used to specify whether the results should be output versus the input frequency (`in`), the output frequency (`out`), or the absolute value of the input frequency (`absin`).

You can specify the output with a pair of nodes or a probe component. Any component with two or more terminals can be a voltage probe. When there are more than two terminals, they are grouped in pairs, and you use the `portv` parameter to select the appropriate pair of

© 2003-2020 All Rights Reserved.

terminals. Alternatively, you can specify a voltage to be the output by giving a pair of nodes on the HBXF analysis statement.

Any component that naturally computes current as an internal variable can be a current probe. If the probe component computes more than one current, you use the `porti` parameter to select the appropriate current. It is an error to specify both `portv` and `porti`. If neither is specified, the probe component provides a reasonable default.

The `stimuli` parameter specifies the inputs for the transfer functions. There are two choices. `stimuli=sources` indicates that the sources present in the circuit should be used. The `xfmag` parameters provided by the sources may be used to adjust the computed gain to compensate for gains or losses in a test fixture. One can limit the number of sources in hierarchical netlists by using the `save` and `nestlvl` parameters. `stimuli=nodes_and_terminals` indicates that all possible transfer functions should be computed.

This is useful when it is not known in advance which transfer functions are interesting. Transfer functions for nodes are computed assuming that a unit magnitude flow (current) source is connected from the node to ground. Transfer functions for terminals are computed assuming that a unit magnitude value (voltage) source is connected in series with the terminal. By default, the transfer functions from a small set of terminals are computed. If transfer functions from specific terminals are required, specify the terminals in the save statement. You must use the `:probe` modifier (for example, Rout:1:probe) or specify `useprobes=yes` on the options statement. If transfer functions from all terminals are required, specify `currents=all` and `useprobes=yes` on the options statement.

You can specify sweep limits by specifying the end points, or the center value and span of the sweep. Steps can be linear or logarithmic, and you can specify the number of steps or the size of each step. You can specify a step size parameter (`step`, `lin`, `log`, or `dec`) to determine whether the sweep is linear or logarithmic. If you do not specify a step size parameter, the sweep is linear when the ratio of stop to start values is less than 10 and logarithmic when this ratio is 10 or greater. Alternatively, you can use the values parameter to specify the values that the sweep parameter should take. If you provide both a specific set of values and a set specified using a sweep range, the two sets are merged and collated before being used. All frequencies are in Hertz.

Parameter Index

In the following index, the number corresponding to each parameter name indicates where to find the description of that parameter.

annotate 34 log 8 relharmvec 12 stimuli 26

© 2003-2020 All Rights Reserved.

center 3
crossingdirection 17
dec 7
extrasampletimepoints 19
freqaxis 23
hbprecond_solver 30
krylov_size 33
lin 6
lorentzian 32
lowmem 31
maxsamples 18
maxsideband 22
nestlvl 25
probe 13
ptvtype 14
relativeTol 28
resgmrescycle 29
sampleprobe 15
sampleratio 20
save 24
sidevec 21
span 4
start 1
step 5
stop 2
sweeptype 11
thresholdvalue 16
title 35
tolerance 27
values 9
valuesfile 10

© 2003-2020
All Rights Reserved.

Circuit Information (info)

Description

The circuit information analysis outputs several types of information about the circuit and its components. You can use various filters to specify what information is output. You can create a listing of model, instance, temperature-dependent, input, output, and operating point parameters. You can also generate a summary of the minimum and maximum parameter values (by using `extremes=yes` or `only`). Finally, you can request that Spectre provides a node-to-terminal map (by using `what=terminals`) or a terminal-to-node map (by using `what=nodes`).

The following are brief descriptions of the types of parameters you can request with the `info` statement:

- Input parameters: Parameters that you specify in the netlist, such as the given length of a MOSFET or the saturation current of a bipolar transistor (use `what=inst`, `models`, `input`, or `all`)
- Output parameters: Parameters that are computed by Spectre, such as temperature-dependent parameters and the effective length of a MOSFET after scaling (use `what=output` or `all`)
- Operating-point parameters: Parameters that depend on the solution computed (use `what=oppoint`)

Initial condition file creation writes node voltages and source currents into a file that can be read by the transient analysis `readic`/`readns` statement.

For additional information, refer to *The info Statement* in the *Spectre Classic Simulator, Spectre APS, Spectre X, and Spectre XPS User Guide*.

Definition

```
Name info parameter=value ...
```


© 2003-2020 All Rights Reserved.

Parameters

1	`what=oppoint`	The parameters that should be printed. Possible values are `none`, `inst`, `models`, `input`, `output`, `nodes`, `all`, `terminals`, `oppoint`, `captab`, `parameters`, `primitives`, `subckts`, `assert`, `allparameters`, `netlist`, `options`, `dumpall`, `bridges`, `opens`, `customreplace`, `custominsert`, `customopen`, `faultparam`, `allcap`, `netcap`, and `moscap`.
2	`where=logfile`	Where the parameters should be printed. Asserts can only be written to rawfile. Possible values are `nowhere`, `screen`, `file`, `logfile`, and `rawfile`.
3	`file="%C:r.info.what"`	File name when `where=file`.
4	`save`	Signals to output. Possible values are `all`, `lvl`, `allpub`, `lvlpub`, `selected`, `none`, and `nooutput`.
5	`nestlvl`	Levels of subcircuits to output.
6	`extremes=yes`	Print minimum and maximum values. Possible values are `no`, `yes`, and `only`.
7	`title`	Analysis title.
8	`descriptions=no`	Print descriptions. Possible values are `no` and `yes`.

© 2003-2020 All Rights Reserved.

Operating point parameters

9	`oppoint=all`	Operating point type when `what=oppoint`. Possible values are `all`, `node`, `dev`, `alldev`, and `subckt`. ■ `all`- operating point for devices, stacked devices, node voltages, and source currents. ■ `node`- operating point for node voltages, and source currents. ■ `dev`- operating point for devices. ■ `subckt`- operating point for stacked devices. ■ `alldev`- operating point for regular and stacked devices. Stacked device parameter reporting requires Spectre option `subcktoppoint=yes`, and save statement for stacked device parameters of interest.

Initial condition file creation

10	`optype=ic`	Prints Spectre format operating point file which can be read with `readic`/`readns` in transient statement. Time for writing operating point file needs to be defined in infotimes statement. Possible values are `ic` and `nodeset`.

Fault generation parameters

11	`faultblock`	Name of the fault block to be generated when `what=bridges`, or `what=opens`.
12	`faultdev=[...]`	Fault devices defined by primitive names, subckt names, or model names.
13	`faultcustom=[...]`	Custom fault subcircuit defined by subckt model name from the netlist.
14	`faultres=10`	Resistance value for bridges or opens (default is `10 Ohm` for bridges and `1G Ohm` for opens).
15	`faultcap=0`	Capacitance value for open faults.

© 2003-2020 All Rights Reserved.

16	`faultterminals=[...]`	List of device terminals to be considered for fault generation (default is all terminals of faultdev).
17	`subckt=[...]`	When `what=bridges` or `what=opens`, faults are generated for all instances of specified subcircuits.
18	`inst=[...]`	Faults are generated for specified subcircuit instances.
19	`xsubckt=[...]`	Faults are not generated for all instances of specified subcircuits.
20	`xinst=[...]`	Faults are not generated for all specified subcircuit instances.
21	`faultrule=none`	Comply with IEEE 2427 requirements for fault list generation. Possible values are `none` and `2427`.
22	`faultcollapse=yes`	If yes, only one fault will be included into the fault list for each set of equivalent faults having the same topology. Possible values are `no` and `yes`.
23	`weight_expr`	Expression to define fault weighting function.
24	`weight_factor=1`	Value to define weighting factor for given block in the fault list.
25	`faultduplicate=yes`	If set to `no`, duplicated faults will be excluded from the fault lists when several info analyses specified for fault generation. Possible values are `no` and `yes`.
26	`faultdeviter=no`	If set to `yes` in +aps flow, a separate fault will be generated for each iterated instance that contains `< number [ : number ] >` in its name. Possible values are `no` and `yes`.
27	`faultparam`	Parameter's name to generate fault list when `what=faultparam`.
28	`faultvalues=[...]`	Parameter values for fault generation when `what=faultparam`.
29	`faultfile`	File name containing parameter values when `what=faultparam`.

© 2003-2020 All Rights Reserved.

30	`faultstart=0`	File name containing parameter values when `what=faultparam`.
31	`faultstep=0`	Step size to sweep parameter's value for fault generation when `what=faultparam`.
32	`faultstop=0`	Final value of the parameter for fault generation when `what=faultparam`.

Captab parameters

33	`detail=node`	How detailed should the capacitance table be. Possible values are `node`, `nodetoground`, and `nodetonode`.
34	`sort=name`	How to sort the capacitance table. Possible values are `name` and `value`.
35	`filter`	If set to `rc`, nodes within the RC net will be dropped. Possible values are `none` and `rc`.
36	`threshold=0 F`	Threshold value for printing capacitances (ignore capacitances smaller than this value).
37	`skip_ground`	Whether the capacitance be skipped to ground. Possible values are `yes` and `no`.
38	`node=[...]`	Nodes for which captab analysis needs to be performed.
39	`intrinsic_cap_merge=no`	Merge the internal captab node to external node. Possible values are `no` and `yes`.

Example initial condition file creation

```
tran1 tran stop=10n infotimes=[3n 4n] infonames=[myinfo1 myinfo2]
myinfo1 info what=oppoint optype=ic where=file file='3n.ic'
myinfo2 info what=oppoint optype=nodeset where=file file='4n.ic'
```


© 2003-2020 All Rights Reserved.

Parameter Index

In the following index, the number corresponding to each parameter name indicates where to find the description of that parameter:

descriptions 8
detail 33
extremes 6
faultblock 11
faultcap 15
faultcollapse 22
faultcustom 13
faultdev 12
faultdeviter 26
faultduplicate 25
faultfile 29
faultparam 27
faultres 14
faultrule 21
faultstart 30
faultstep 31
faultstop 32
faultterminals 16
faultvalues 28
file 3
filter 35
inst 18
intrinsic_cap_merge 39
nestlvl 5
node 38
oppoint 9
optype 10
save 4
skip_ground 37
sort 34
subckt 17
threshold 36
title 7
weight_expr 23
weight_factor 24
what 1
where 2
xinst 20
xsubckt 19

© 2003-2020
All Rights Reserved.

Loopfinder Analysis (lf)

Description

The loopfinder analysis begins by linearizing the circuit about an operating point. This analysis detects poles that may potentially cause stability problems, and identifies the loops associated with the potentially problematic poles.

For additional information, refer to *LoopFinder Analysis* in the Spectre Classic Simulator, Spectre APS, Spectre X, and Spectre XPS User Guide.

Definition

```
Name lf parameter=value ...
```

Parameters

Sweep interval parameters

1	`start=0`	Start sweep limit.
2	`stop`	Stop sweep limit.
3	`center`	Center of sweep.
4	`span=0`	Sweep limit span.
5	`step`	Step size, linear sweep.
6	`lin=50`	Number of steps, linear sweep.
7	`dec`	Points per decade.
8	`log=50`	Number of steps, log sweep.
9	`values=[...]`	Array of sweep values.
10	`valuesfile`	Name of the file containing the sweep values.

Sweep variable parameters

11	`dev`	Device instance whose parameter value is to be swept.

© 2003-2020 All Rights Reserved.

12	`mod`	Model whose parameter value is to be swept.
13	`param`	Name of parameter to sweep.

State-file parameters

14	`readns`	File that contains an estimate of DC solution (nodeset).
15	`write`	DC operating point output file at the first step of the sweep.
16	`writefinal`	DC operating point output file at the last step of the sweep.

Output parameters

17	`oppoint=no`	Determines whether operating point information should be computed. If set to `yes`, where should it be printed (screen or file). Operating point information is not printed if the operating point computed in the previous analysis remains unchanged. Possible values are `no`, `screen`, `logfile`, and `rawfile`.

Convergence parameters

18	`restart=yes`	Restart the DC solution from scratch if any condition has changed. If not, use the previous solution as initial guess. Possible values are `no` and `yes`.

Annotation parameters

19	`annotate=sweep`	Degree of annotation. Possible values are `no`, `title`, `sweep`, `status`, and `steps`.

© 2003-2020 All Rights Reserved.

Miscellaneous parameters

20	`order`	Order of expansion around each pole to generate residue information. This option is used for model order reduction in node impedance computation.
21	`sensitivity=3`	Sensitivity of the `krylov` method of pole detection and the accuracy of impedance computation. Higher values increase runtime while reduce the chance of missing a pole and improve the accuracy of impedance values. Possible values are `1`, `2`, `3`, `4`, and `5`.
22	`solver_method=auto`	If set to `krylov`, the modified rational krylov method is used for pole detection; if set to `direct`, QZ method is used. If set to `auto`, loopfinder analysis automatically chooses the method for pole detection. Possible values are `auto`, `direct`, and `krylov`.
23	`romsize=6000`	Minimum number of nodes required for applying the `krylov` method. This option is used if `solver_method=auto`.
24	`zmin=0.1 Ω`	Minimum DC impedance of interest in loop identification.
25	`dampmax=0.7`	Maximum damping ratio, that is, the negative value of `cos(phi)` where `phi` is the argument of the corresponding pole, for targeting loops. This option is used in pole detection.
26	`freqtol (Hz)`	Relative error tolerance for natural frequencies of loops if modified rational `krylov` method is used for pole detection.
27	`freqmax=1e10 Hz`	Maximum natural frequency for targeting loops.
28	`freqmin=1e-2 Hz`	Minimum natural frequency for targeting loops.
29	`emptyloop=yes`	If set to `yes`, empty loops, if any, are printed in the output; if set to `no`, only non-empty loops are printed. Possible values are `no` and `yes`.
30	`doublekrylov`	If set to `no`, krylov flow searches the region of interest once; if set to `yes`, krylov flow searches the region of interest twice to minimize the chances of missing poles. Possible values are `no` and `yes`.

© 2003-2020 All Rights Reserved.

31	`print_all_poles=no`	If set to `yes`, print full list of poles to the log file; if set to `no`, do not print full list of poles. This option is used in the direct solver method. Possible values are `no` and `yes`.
32	`prevoppoint=no`	Use the operating point computed from the previous analysis. Possible values are `no` and `yes`.
33	`force=none`	The set of initial conditions to use. Possible values are `none`, `node`, `dev` and `all`.
34	`readforce`	File that contains initial conditions.
35	`skipdc=no`	Skip DC analysis. Possible values are `no` and `yes`.
36	`useprevic=no`	If set to yes or ns, use the converged initial condition from previous analysis as ic or ns. Possible values are `no`, `yes` and `ns`.

By default, this analysis computes the operating point, if it is not known, or recomputes it if any significant component or circuit parameter has changed. However, if an operating point was computed during a previous analysis, you can set `prevoppoint=yes` to avoid recomputing it. For example, if `prevoppoint=yes` and the previous analysis was a transient analysis, the operating point is the state of the circuit at the final time point.

Nodesets help find the DC or the initial transient solution. You can specify nodesets in the circuit description file with nodeset statements or in a separate file by using the readns parameter. When nodesets are specified, Spectre computes an initial guess of the solution by performing DC analysis, while forcing the specified values on to nodes by using a voltage source in series with a resistor whose resistance is rforce. Spectre then removes these voltage sources and resistors and computes the required solution from this initial guess.

Nodesets have two important uses. First, if a circuit has two or more solutions, nodesets can bias the simulator towards computing the required solution. Second, these are a convergence aid. By estimating the solution of the largest possible number of nodes, you might be able to eliminate a convergence problem or significantly speed up convergence.

When you simulate the same circuit multiple times, it is recommended that you use both `write` and `readns` parameters and assign the same file name to both parameters. DC analysis then converges quickly even if the circuit has changed since the last simulation, and the nodeset file is automatically updated.

The loopfinder analysis does not work properly with frequency-defined or distributed devices. If there are frequency-defined or distributed devices, poles and node impedances are

© 2003-2020 All Rights Reserved.

computed by approximating those devices as equivalent conductances and capacitances evaluated at 1Hz.

The default value of options `freqtol`, `order`, and `doublekrylov` are controlled by the option `sensitivity`. The effect of sensitivity on other parameters is shown in the following table.

sensitivity	freqtol	order	doublekrylov
5	1.0e-6	7	yes
4	1.0e-4	5	no
3	1.0e-3	3	no
2	3.0e-3	2	no
1	3.0e-3	2	no

Parameter Index

In the following index, the number corresponding to each parameter name indicates where to find the description of that parameter.

annotate 19	freqmin 28	print_all_poles 31	start 1
center 3	freqtol 26	readforce 34	step 5
dampmax 25	lin 6	readns 14	stop 2
dec 7	log 8	restart 18	useprevic 36
dev 11	mod 12	romsize 23	values 9
doublekrylov 30	oppoint 17	sensitivity 21	valuesfile 10
emptyloop 29	order 20	skipdc 35	write 15
force 33	param 13	solver_method 22	writefinal 16

© 2003-2020 All Rights Reserved.

```
freqmax  27        prevoppoint  32     span  4             zmin  24
```


© 2003-2020 All Rights Reserved.

Load Pull Analysis (loadpull)

Description

Loadpull sweeps the magnitude (`rho`) and phase (`phi`) of the load instance over a specified range, to detect potentially unstable amplifier load impedances.

The component in the netlist that is used to set the magnitude and phase of the reflection coefficient of the loadpull simulation is called the load instance and is different for shooting and harmonic balance. For harmonic balance, the load instance must be either a `port` or a `portAdapter`. For shooting pss, the load instance must be a `portAdapter`.

In the loadpull statement, you can define the sweeps for the magnitude and phase (in degrees) for the reflection coefficient of the load instance. To calculate the amplifier output, either `hb` or `pss` is required. The `hb` or `pss` statement is enclosed in curly brackets after the loadpull statement. Harmonic balance is likely to be faster than shooting PSS for most amplifiers.

For additional information, see *loadpull* in the *Spectre Circuit Simulator and Accelerated Parallel Simulator RF Analysis User Guide*.

Definition

```
Name loadpull parameter=value ...
```

Parameters

1	`rho`	Name of parameter to rho sweep. The name is arbitrary and must be specified in the parameter list. When a `portAdapter` is used as the load instance, the parameter must be used in the `portAdapter` to set the reflection coefficient magnitude.
2	`rhostart=0`	Start sweep limit of rho.
3	`rhostop`	Stop sweep limit of rho.
4	`rhostep`	Step size, linear sweep of rho.
5	`rholin=50`	Number of steps, linear sweep of rho.
6	`rhovalues=[...]`	Array of sweep values of rho.

© 2003-2020 All Rights Reserved.

7	`phi`	Name of parameter to phi sweep. The name is arbitrary and must be specified in the parameter list. When a `portAdapter` is used as the load instance, the parameter must be used in the `portAdapter` to set the reflection coefficient angle.
8	`phistart=0`	Start sweep limit of phi.
9	`phistop`	Stop sweep limit of phi.
10	`phistep`	Step size, linear sweep of phi.
11	`philin=50`	Number of steps, linear sweep of phi.
12	`phivalues=[...]`	Array of sweep values of phi.
13	`inst`	Used only in harmonic balance when the load instance is a port. This is the instance name for the port that loads the amplifier. When a `portAdapter` is used as the load instance, the `portAdapter` that uses the `rho` and `phi` values in the netlist is assumed to be the load instance.
14	`z0=50`	Used only in harmonic balance when the load instance is a port and sets the impedance of the load port. When portAdapter is used as the load instance, this value is set in the portAdapter instance.

Examples

Harmonic Balance:

```
lphb  loadpull  inst=PORT4  rho=mag  rhostart=0.001  rhostop=0.991
+     rhostep=0.11  phi=theta  phistart=-180  phistop=160  phistep=20
+     z0=50  {
  hb  hb  tstab=0  oversample=[1]  fundfreqs=[(2.45G)]  maxharms=[6]
+   errpreset=moderate  annotate=status
}
```

Shooting PSS:

```
lppss  loadpull  rho=mag  rhostart=0.001  rhostop=0.991
+      rhostep=0.11  phi=theta  phistart=-180  phistop=160  phistep=20  {
  pss  pss  fund=2.45G  harms=7  errpreset=moderate  tstab=3n
+    annotate=status
}
```


© 2003-2020 All Rights Reserved.

Parameter Index

In the following index, the number corresponding to each parameter name indicates where to find the description of that parameter.

inst 13
phi 7
philin 11
phistart 8
phistep 10
phistop 9
phivalues 12
rho 1
rholin 5
rhostart 2
rhostep 4
rhostop 3
rhovalues 6
z0 14

© 2003-2020
All Rights Reserved.

Monte Carlo Analysis (montecarlo)

Description

The `montecarlo` analysis is a swept analysis with associated child analyses similar to the sweep analysis (see `spectre -h sweep`.) The Monte Carlo analysis refers to "statistics blocks" where statistical distributions and correlations of netlist parameters are specified (detailed information about statistics blocks is given below). For each iteration of the Monte Carlo analysis, new pseudo-random values are generated for the specified netlist parameters (according to their specified distributions) and the list of child analyses are then executed.

Expressions are associated with the child analyses. These expressions, which you constructed as scalar calculator expressions during Monte Carlo analysis setup, can be used to measure circuit metrics, such as the slew-rate of an op-amp. For each iteration during a Monte Carlo analysis, the expression results vary with the netlist parameters. Therefore, Monte Carlo analysis allows you to examine and predict circuit performance variations, which affect yield.

The statistics blocks allow you to specify batch-to-batch (process) and per-instance (mismatch) variations for netlist parameters. These statistically-varying netlist parameters can be referenced by models or instances in the main netlist and may represent IC manufacturing process variation or component variations for board-level designs. The following description gives a simplified example of the Monte Carlo analysis flow:

```
perform nominal run if requested

if any errors in nominal run then stop

foreach Monte Carlo iteration {

  if process variations specified then

    apply process variation to parameters

  if mismatch variations specified then

    foreach subcircuit instance {

       apply mismatch variation to parameters

    }

  foreach child analysis {
```


© 2003-2020 All Rights Reserved.

```
    run child analysis

      evaluate expressions

  }

}
```

Definition

```
Name montecarlo parameter=value ...
```

Parameters

Analysis parameters

1	`numruns=100`	Number of Monte Carlo iterations to perform (does not include the nominal run).
2	`firstrun=1`	Starting iteration number.
3	`runpoints=[...]`	Specifies a set of iteration indexes to be simulated. indexes can be any positive integer value, or values specified using the range function.
4	`variations=process`	Level of statistical variation to apply. Possible values are `process`, `mismatch`, and `all`.
5	`sampling=standard`	Method of statistical sampling to apply. Possible values are `standard`, `lhs`, `orthogonal`, and `lds`.
6	`numbins=0`	Number of bins for latin-hypercube(lhs) and orthogonal method. The number is checked against numruns + firstrun - 1, and Max(numbins, numruns + firstrun -1) is used.
7	`seed`	Optional starting seed for random number generator.
8	`scalarfile`	Output file that contains output scalar data.
9	`paramfile`	Output file that contains output scalar data labels.

© 2003-2020 All Rights Reserved.

10	`dut=[...]`	If set, the specified subcircuit instance have process and mismatch variations applied and the unspecified instance only have process variations applied. All subcircuits instantiated under this instance also have process and mismatch enabled. By default, mismatch is applied to all subcircuit instances in the design and process is applied globally. This parameter allows the test-bench to change and not affect the variations seen by the actual design.
11	`ignore=[...]`	If set, no variation is applied to specified subcircuit instances. In addition, all subcircuits instantiated under this instance do not have variation enabled. By default, the mismatch is applied to all subcircuit instances in the design and the process is applied globally.
12	`dutparams=[...]`	If set, only the specified statistical parameters have process and mismatch variations applied.
13	`ignoreparams=[...]`	If set, the specified statistical parameters are excluded from applying process and mismatch variation.
14	`json=no`	Output JSON files and save the variations and analysis setttings. Possible values are `yes` and `no`.
15	`accuracyaware=summary`	Specifies the mode of run-time monitoring and early-termination of a montecarlo simulation. In `summary` mode, the statistics of measurement is only listed after the Monte-Carlo analysis finishes. In `iteration` mode, the statistics is printed after each step of Monte-Carlo analysis. In `autostop` mode, analysis is terminated based on the criteria specified by the options `minmaxpairs`, and `smooththresh`. Possible values are `summary`, `iteration`, and `autostop`.
16	`minmaxpairs=[...]`	Pairs of values that are used to specify the min and max of each measurement defined in ocean expressions. Simulation is terminated when the current iteration generates a measurement that resides outside the region of [min, max]. It is not necessary that the number of pairs equals the number of measurement. However, each defined pair must be aligned with the corresponding ocean measurement. Extra number of pairs or measurement wil be ignored when deciding upon early termination. This option is only active when `accuracyaware=autostop`.

© 2003-2020 All Rights Reserved.

17	`smoothththresh=0.0`	Specifies the smoothness threshold of an averaged ocean measurement. The average takes place within consecutive non-overlapping 200-iteration windows. Suggested value is 1e-4 for a reasonably converged signal-average. This test of smoothness is only active when `accuracyaware=autostop`.
18	`method=standard`	Method used to run montecarlo analysis. `standard` is the regular montecarlo analysis with varying netlist parameters. VADE is variation aware design with directly varying device parameters. Possible values are `standard` and `vade`.

Saving Process Parameters

19	`saveprocessparams`	Whether to save scalar data for statistically varying process parameters that are subject to process variation. Possible values are `no` and `yes`.
20	`processscalarfile`	Output file that contains process parameter scalar data.
21	`processparamfile`	Output file that contains process parameter scalar data labels.
22	`saveprocessvec=[...]`	Array of statistically varying process parameters (which are subject to process variation) to save as scalar data in `processscalarfile`.

Saving Mismatch Parameters

23	`savemismatchparams=no`	Whether to save scalar data for statistically varying mismatch parameters that are subject to mismatch variation. Possible values are `no` and `yes`.
24	`mismatchscalarfile`	Output file that contains mismatch parameter scalar data.
25	`mismatchparamfile`	Output file that contains mismatch parameter scalar data labels.
26	`dumpdependency=none`	Whether to save a dependency map. Possible values are `none` and `mismatch`.

© 2003-2020 All Rights Reserved.

27	`dependencymapfile`	Specify the name of the output file that contains a dependency map, which indicates the pairing of mismatch parameters and subcircuit instances.
28	`dependencyscalarfile`	Output the random numbers that are used by mismatch parameters to a file.
29	`dependencyparamfile`	Output the mapping from mismatch parameters to corresponding subcircuit instances to a file.

Flags

30	`donominal=yes`	Whether to perform nominal run. Possible values are `no` and `yes`.
31	`addnominalresults=no`	Whether to add nominal run results to MC run results. Possible values are `no` and `yes`.
32	`paramdumpmode=no`	Whether to fully dump process/mismatch parameters information. Possible values are `no` and `yes`.
33	`dumpseed=no`	Whether to dump seed parameters information. Possible values are `no` and `yes`.
34	`nullmfactorcorrelation=no`	Whether to set 0% correlation mismatch devices with m-factor. Possible values are `no` and `yes`.
35	`appendsd=no`	Whether to append scalar data. Possible values are `no` and `yes`.
36	`savefamilyplots=no`	Whether to save data for family plots. If `yes`, this could require considerable disk space. Possible values are `no` and `yes`.
37	`savedatainseparatedir=no`	Whether to save data for each plot in a separate directory. If `yes`, this could require considerable disk space. Possible values are `no` and `yes`.
38	`evaluationmode=no`	If set to `yes`, dump random numbers assigned to statistical parameters without running enclosed analyses. Possible values are `no` and `yes`.
39	`diskstorage=no`	If set to yes, mismatch data is stored on disk instead of memory while running a montecarlo analysis. Possible values are `no` and `yes`.

© 2003-2020 All Rights Reserved.

40	`wfseparation=no`	If set to yes, a separated directory by the name of `nom` is created for the nominal run and the directory names of individual iterations are simplified by removing the leading analysis names. Possible values are `no` and `yes`.
41	`seedscramble=no`	If set to yes, a scrambling procedure is applied to the seed value to generate a `better` random number sequence in the sense of randomness. Possible values are `no` and `yes`.
42	`distribute`	Distribute a Monte Carlo analysis to reduce simulation time by using more computer cores across multiple computers. Possible values are `no`, `fork`, `rsh`, `ssh`, `lsf`, `sge`, `nc`, and `auto`.
43	`numprocesses`	Specifies the number of jobs in distributed mode.
44	`usesamesequence=no`	If set to yes, the random number sequence is maintained for a seed, even if there is a non-empty dut/ignore list. Possible values are `no` and `yes`.
45	`rngversion`	Version of random number generator. Possible values are default and v`151`.

Annotation Parameters

46	`annotate=sweep`	Degree of annotation. Possible values are `no`, `title`, `sweep`, and `status`.
47	`title`	Analysis title.
48	`stdscale=default`	Scale the standard deviation by the specified value. The default value is `1.0`.
49	`dist=default`	Force all MonteCarlo random variation distributions to the specified type. Possible values are `default`, `unif`, and `gauss`.
50	`ignore_type=[...]`	If set, no variation is applied to the specified types. Default is `none`. Possible values are `none` and `memcell`.

© 2003-2020 All Rights Reserved.

Detailed Description and Examples

`sampling=[standard | lhs]`

Determines the sampling behavior. This parameter can be set to `standard`, the default value, or `lhs`. `lhs` invokes latin-hypercube (LHS) method, while `standard` defaults to the existing standard sampling behavior.

`numbins=value`

Controls the number of subdivisions used in the LHS method.

If `numbins` is not specified, the number of subdivisions of the sampling space in LHS will be `numruns + firstrun - 1`. This parameter is active only when sampling is `lhs`. If `numbins` is set to a non-zero integer, the number of subdivisions will be assigned to the greater of the two values `numbins` or `numruns + firstrun -1`.

`numruns:(default=100)`

Specifies the number of Monte Carlo iterations to perform. The simulator performs a loop, running the specified child analyses, and evaluating any expressions `numruns` times.

`runpoints:(no default)`

Specifies the iteration indexes to be simulated. Two types of settings are accepted: integers, and ranges. For example, `runpoints=[10 range(15, 18) 20]` is an acceptable setting, which is translated to perform the simulation of `10`th, `15`th, `16`th, `17`th, `18`th, and `20`th iterations.

`seed:(no default)`

Specifies the seed for the random number generator. By always specifying the same seed, you can reproduce a previous experiment. If you do not specify a seed, each time you run the analysis, you will get different results, that is, a different stream of pseudo-random numbers is generated.

`scalarfile="filename"`

Allows you to specify an ASCII file in which scalar data (results of expressions that resolve to scalar values) is written. The data from this file can be read and plotted in histograms by ADE. For each iteration of each Monte Carlo child analyses, Spectre (through Artil) writes a line to this ASCII file, which contains scalar data (one scalar expression per column, for example, slewrate or bandwidth). The default name for this file is of the form *`name`*`.mcdata`, where *`name`* is the name of the Monte Carlo analysis instance. This file contains only the matrix of numeric values. If you are an ADE Monte Carlo user, you will be more familiar with the term

© 2003-2020 All Rights Reserved.

mcdata file for the scalar file. Additionally, when the ADE Monte Carlo tool is used to generate the Spectre netlist file, Spectre merges the values of the statistically varying process parameters into this file that contains the scalar data (results of expressions). This means that ADE can later read the data and create scatter plots of the statistically varying process parameters against each other, or against the results of the expressions. In this way, you can see correlations between process parameter variations and circuit performance variations. This data merging occurs whenever the scalarfile and processscalarfile are written in the same directory.

paramfile="filename"

Contains the titles, sweep variable values, and the full expression for each of the columns in the scalarfile. If you are an ADE Monte Carlo user, you will be more familiar with the term mcparam file for the paramfile. This file is created in the psf directory by default, unless you specify an alternative path with the file name.

processscalarfile="filename"

If saveprocessparams is set to yes, the process (batch-to-batch) values of all statistically varying parameters are saved to this scalar data file. You can use saveprocessvec to filter out a subset of parameters in which case Spectre will save only the parameters specified in saveprocessvec to the processscalarfile). processscalarfile is equivalent to scalarfile, except that the data in the scalarfile contains the values of the scalar expressions, whereas the data in processscalarfile contains the corresponding process parameter values. The default name for this file is of the form *instname*.*process*.mcdata, where *instname* is the name of the Monte Carlo analysis instance. This file is created in the psf directory by default, unless you specify an alternative path in the filename. You can load processscalarfile and processparamfile into the ADE statistical post-processing environment to plot/verify the process parameter distributions. If you later merge the processparamfile with the data in the scalarfile, you can then plot scalar expressions values against the corresponding process parameters by loading this merged file into the ADE statistical postprocessing environment.

processparamfile="filename"

Contains the titles and sweep variable values for each of the columns in processscalarfile. These titles are the names of the process parameters.

processparamfile is equivalent to the paramfile, except that paramfile contains the name of the expressions, whereas processparamfile contains the names of the process parameters. The default name for this file is of the form *instname*.*process*.mcparam, where *instname* is the name of the Monte Carlo analysis instance. This file is created in the psf directory by default, unless you specify an alternative location with *filename*.

firstrun:(default=1)

© 2003-2020 All Rights Reserved.

Specifies the index of the first iteration. If the first iteration is specified as some number n greater than one, then the beginning n-1 iterations are `skipped`, that is, the Monte Carlo analysis behaves as if the first n-1 iterations were run, but without performing the child analyses for these iterations. The subsequent stream of random numbers generated for the remaining iterations will be the same as if the first n-1 iterations were run. By specifying the first iteration number and the same value for seed, you can reproduce a particular run or sequence of runs from a previous experiment (for example, to examine an outlier case in more detail).

`variations={process,mismatch,all} (defaults to process)`

Determines whether to apply only process (batch-to-batch) variations, or only mismatch (per-instance) variations, or both. This parameter assumes that you have specified appropriate statistical distributions in the statistics block. You cannot request that mismatch variations be applied unless you have specified mismatch statistics in the statistics block. You cannot request that process variations be applied unless you have specified process statistics in the statistics block.

`saveprocessvec=[rshsp TOX ...]`

If `saveprocessparams` is set to `yes`, this parameter saves the process (batch-to-batch) values of only those parameters that are listed in saveprocessvec to the `processparamfile`. This acts as a filter so that you do not save all process parameters to the file. If you do not want to filter the list of process parameters, do not specify this parameter.

`donominal={yes,no}`(defaults to `yes`)

Controls whether Spectre should perform a nominal run before starting the main Monte Carlo loop of iterations. If any errors are encountered during the nominal run (for example, convergence problems, incorrect expressions, and so on) then Spectre issues an appropriate error message and immediately abandons the Monte Carlo analysis.

If set to `no`, Spectre runs only the Monte Carlo iteration, and does not perform nominal analysis. If any errors are encountered during the Monte Carlo iterations, Spectre issues a warning and continues with the next iteration of the Monte Carlo loop.

`addnominalresults={yes,no}` (defaults to `no`).

Controls whether Spectre should append nominal run results after the Monte Carlo run results in the data files.

`paramdumpmode={yes,no}` (defaults to `no`).

Controls whether Spectre should dump out each process/mismatch parameter distribution type, mean value, s.t.d value, and correlation information into additional parameter files. The

© 2003-2020 All Rights Reserved.

names for these files are `instname.process_full.param`, `instname.mismatch_full.param`, `instname.process.correlate.param` and `instname.mismatch.correlate.param`, where *`instname`* is the name of the Monte Carlo analysis instance.

`dumpseed={yes,no}` (defaults to `no`)

Controls whether Spectre should dump out seed parameter and iteration number into the `instname.seed` file, where *`instname`* is the name of the Monte Carlo analysis instance.

`nullmfactorcorrelation={yes,no}` (defaults to `no`)

Controls whether Spectre should emulate a 0% correlation for mismatch devices with m-factor.

`appendsd={yes,no}` (defaults to `no`)

Specifies whether to append scalar data to an existing scalarfile, or to overwrite the existing scalarfile. This flag applies to both the scalar file and the processscalarfile.

`savefamilyplots={yes,no}`

If set to `yes`, a data file (for example, psf) is saved for each analysis for each Monte Carlo iteration, in addition to the expressions scalar results that are saved to the ASCII scalar data file at the end of each iteration. Saving the full data files between runs enables the cloud plotting feature (overlaid waveforms) in ADE. It also enables you to define/evaluate new calculator measurements after the simulation has been run using the ViVA XL calculator. This feature could result in a huge amount of data being stored to disk, and it is advised that you use this feature with care. If you do decide to use this feature, it is advisable to keep the saved data to a minimum. If this parameter is set to `no`, data files are overwritten by each Monte Carlo iteration.

`savedatainseparatedir={yes,no}`

If set to `yes`, a data file (for example, psf) is saved for each analysis for each Monte Carlo iteration in a separate directory, in addition to the expressions scalar results that are saved to the ASCII scalar data file at the end of each iteration. This feature can result in a huge amount of data being stored to the disk. Therefore, it is recommended that you use this feature with care and keep the saved data to a minimum. If this parameter is set to `no`, data files are overwritten by each Monte Carlo iteration.

`annotate={no,title,sweep,status}`

Specifies the degree of annotation. Use the maximum value of `status` to print a summary of the runs that did not converge, had problems evaluating expressions, and so on.

© 2003-2020 All Rights Reserved.

Examples:

```
// do a Monte Carlo analysis, with process variations only
// useful for looking at absolute performance spreads
mc1 montecarlo variations=process seed=1234 numruns=200 {
  dcop1 dc      // a child analysis
  tran1 tran start=0 stop=1u    // another child analysis
  // expression calculations are sent to the scalardata file
  export slewrate=oceanEval("slewRate(v("vout"),10n,t,30n,t,10,90 )")
}
// do a Monte Carlo analysis, with mismatch variations only
// useful for detecting spreads in differential circuit
// applications, etc. Do not perform a nominal run.
mc2 montecarlo donominal=no variations=mismatch seed=1234 numruns=200 {
  dcop2 dc
  tran2 tran start=0 stop=1u
  export slewrate=oceanEval("slewRate(v("vout"),10n,t,30n,t,10,90 )")
}
// do both together...
mc3 montecarlo saveprocessparams=yes variations=all numruns=200 {
  dcop3 dc
  tran3 tran start=0 stop=1u
  export slewrate=oceanEval("slewRate(v("vout"),10n,t,30n,t,10,90 )")
}
```

Specifying Parameter Distributions Using Statistics Blocks

The statistics blocks are used to specify the input statistical variations for a Monte Carlo analysis. A statistics block may contain one or more `process` blocks (which represent batch-to-batch type variations) and/or one or more `mismatch` blocks (which represent on-chip or device mismatch variations), in which the distributions for parameters are specified. Statistics blocks may also contain one or more correlation statements to specify the correlations between specified process parameters, and/or to specify correlated device instances (for example matched pairs). Statistics blocks may also contain a `truncate` statement that may be used for generating truncated distributions. The distributions specified in the process block are sampled once per Monte Carlo iteration and are typically used to represent batch-to-batch or process variations, whereas the distributions specified in the mismatch block are sampled on a per subcircuit instance basis and are typically used to represent device-to-device mismatch for devices on the same chip. In the case where the same parameter is subject to both process and mismatch variations, the sampled process value becomes the mean for the mismatch random number generator for that particular parameter.

© 2003-2020 All Rights Reserved.

Note: Multiple statistics blocks can exist and in that case the blocks either accumulate or overlay. Typically, process variations, mismatch variations, and correlations between process parameters are specified in one statistics block. A second statistics block should be specified where actual device instance correlations are specified (that is, specification of matched pairs).

Statistics blocks can be specified using combinations of the Spectre keywords statistics, process, mismatch, vary, truncate, and correlate. Braces {} are used to delimit blocks.

The following example shows statistics blocks, which are discussed below along with syntax requirements.

```
// define some netlist parameters to represent process parameters
// such as sheet resistance and mismatch factors
parameters rshsp=200 rshpi=5k rshpi_std=0.4K xisn=1 xisp=1 xxx=20000 uuu=200
// define statistical variations, to be used
// with a MonteCarlo analysis.
statistics {
    process {   // process: generate random number once per MC run
        vary rshsp dist=gauss std=12 percent=yes
        vary rshpi dist=gauss std=rshpi_std // rshpi_std is a parameter
        vary xxx dist=lnorm std=12
        vary uuu dist=unif N=10 percent=yes
    truncate tr=2.0 // +/- 2 sigma
        ...
    }
    mismatch {  // mismatch: generate a random number per instance
        vary rshsp dist=gauss std=2
        vary xisn dist=gauss std=0.5
        vary xisp dist=gauss std=0.5
        truncate tr=7.0 // +/- 7 sigma
    }
    // some process parameters are correlated
    correlate param=[rshsp rshpi] cc=0.6
    // specify a global distribution truncation factor
    truncate tr=6.0     // +/- 6 sigma
}
//  a separate statistics block to specify correlated (i.e. matched) components
// where m1 and m2 are subckt instances.
statistics {
    correlate dev=[m1 m2] param=[xisn xisp] cc=0.8
}
```


© 2003-2020 All Rights Reserved.

```
//  a separate statistics block to specify correlation with wildcard, where
// I*.M3 matches multiple subckt instances, for examples, I1.M3, I2.M3, I3.M3,
etc..
// Only the asterisk (*) is recognized as a valid wildcard symbol.
statistics {
    correlate dev=[m1 m2[ I*.M3 ] param=[xisn xispmisx mixy] cc=0.8
```

Specifying Distributions

Parameter variations are specified using the following syntax:

```
vary PAR_NAME dist=<type> {std=<value> | N=<value>} {percent=yes|no}
```

Three types of parameter distributions are available: gaussian, lognormal, and uniform, corresponding to the keywords `gauss`, `lnorm` and `unif`, respectively. For both `gauss` and the `lnorm` distributions, you specify a standard deviation using the `std` keyword.

Gaussian Distribution

For the gaussian distribution, the mean value is taken as the current value of the parameter being varied, giving a distribution denoted by Normal (mean,std). Using the example above, parameter rshpi is varied with a distribution of Normal (5k,0.4k)

Lognormal Distribution

The lognormal distribution is denoted by:

```
log(x) = Normal( log(mean), std )
```

where, x is the parameter being specified as having a lognormal distribution.

Note: `log()` is the natural logarithm function.

For parameter xxx in the example, the process variation is according to:

```
log(xxx) = Normal( log(20000), 12 )
```

Uniform Distribution

The uniform distribution for parameter x is generated according to:

```
x = unif(mean-N, mean+N)
```

The mean value is the nominal value of the parameter x, and the parameter is varied about the mean with a range of +/- N. The standard deviation is not specified for the uniform distribution, but its value can be calculated by using the formula `std=N/sqrt(3)`.

© 2003-2020 All Rights Reserved.

Values as Percentages

The `percent` flag indicates whether the standard deviation `std` or uniform range `N` are specified in absolute terms (`percent=no`) or as a percentage of the mean value (`percent=yes`). For parameter `uuu` in the example above, the mean value is 200, and the variation is 200 +/- 10%*(200) i.e. 200 +/- 20. For parameter `rshsp`, the process variation is given by Normal (200, 12%*(200)), that is, Normal (200, 24). It is recommended that you do not use `percent=yes` with the lognormal distribution.

Process and Mismatch Variations

The statistics specified in a process block are applied at global scope, and the distributions are sampled once per Monte Carlo iteration. The statistics specified in a mismatch block are applied on a per-subcircuit instance basis, and are sampled once per subcircuit instance. If you place model cards and/or device instances in subcircuits, and add a mismatch block to your statistics block you can effectively model device-to-device mismatch for these devices/models.

Correlation Statements

There are two types of correlation statements that you can use: process parameter correlation statements and instance correlation statements.

Process Parameter Correlation

The syntax of the process parameter correlation statement is:

```
correlate param=[list of parameters] cc=<value>
```

This allows you to specify a correlation coefficient between multiple process parameters. You can specify multiple process parameter correlation statements in a statistics block to build a matrix of process parameter correlations. During a Monte Carlo analysis, process parameter values are randomly generated according to the specified distributions and correlations.

Mismatch Correlation (Matched Devices)

The syntax of the instance or mismatch correlation statements are:

```
correlate dev=[list of subcircuit instances] {param=[list of parameters]}
     cc=<value>

correlate dev=[<wildcard_expression] {param=[list of parameters]} cc=<value>
```

where, the device or subcircuit instances to be matched are listed in the list of subcircuit instances or regular expressions with asterisk (*), and the list of parameters specifies which parameters with mismatch variations are to be correlated.

© 2003-2020 All Rights Reserved.

The instance mismatch correlation statement is used to specify correlations for particular subcircuit instances. If a subcircuit contains a device, you can effectively use the instance correlation statements to specify that certain devices are correlated (that is, matched) and give the correlation coefficient. You can optionally specify which parameters are to be correlated by giving a list of parameters (each of which must have had distributions specified for it in a mismatch block), or specify no parameter list, in which case all parameters with mismatch statistics specified are correlated with the given correlation coefficient. The correlation coefficients are specified in the <value> field and must be between +/- 1.0.

Note: Correlation coefficients can be constants or expressions, as can `std` and `N` when specifying distributions.

Truncation Factor

The default truncation factor for gaussian distributions (and for the gaussian distribution underlying the lognormal distribution) is 4.0 sigma. Randomly generated values that are outside the range of mean +/- 4.0 sigma are automatically rejected and regenerated until they fall inside the range. You can change the truncation factor using the `truncate` statement. The syntax is:

```
truncate tr=<value>
```

The following conditions should be considered while setting the truncate factor:

- The value of the truncation factor can be a constant or an expression.
- Parameter correlations can be affected by using small truncation factors.
- There are different truncate for process and mismatch blocks. If a truncate for process or mismatch block is not given, it will be set to the value of truncate in statistic block.

Hints to Improve Performance

To get better run performance on small-sized designs, it is recommended to use the following settings:

- Set the global option `narrate=compact` to reduce the annotation messages
- Reduce the number of saved signals, or use the `save=nooutput` option
- Use just the measure statement to measure the simulation results

© 2003-2020 All Rights Reserved.

Parameter Index

In the following index, the number corresponding to each parameter name indicates where to find the description of that parameter.

accuracyaware 15
addnominalresults 31
annotate 46
appendsd 35
dependencymapfile 27
dependencyparamfile 29
dependencyscalarfile 28
diskstorage 39
dist 49
distribute 42
donominal 30
dumpdependency 26
dumpseed 33
dut 10
dutparams 12
evaluationmode 38
firstrun 2
ignore 11
ignore_type 50
ignoreparams 13
json 14
method 18
minmaxpairs 16
mismatchparamfile 25
mismatchscalarfile 24
nullmfactorcorrelation 34
numbins 6
numprocesses 43
numruns 1
paramdumpmode 32
paramfile 9
processparamfile 21
processscalarfile 20
rngversion 45
runpoints 3
sampling 5
savedatainseparatedir 37
savefamilyplots 36
savemismatchparams 23
saveprocessparams 19
saveprocessvec 22
scalarfile 8
seed 7
seedscramble 41
smooththresh 17
stdscale 48
title 47
usesamesequence 44
variations 4
wfseparation 40

© 2003-2020 All Rights Reserved.

Noise Analysis (noise)

Description

Noise analysis linearizes the circuit about the operating point and computes the noise spectral density at the output. If you identify an input source, the transfer function and the input-referred noise for an equivalent noise-free network are computed. If the input source is noisy, the noise figure is also computed.

The noise is computed at the output of the circuit. The output is specified with either a pair of nodes or a probe component. To specify the output of a circuit with a probe, specify it with the `oprobe` parameter. If the output is voltage (or potential), choose a `resistor` or a `port` as the output probe. If the output is current (or flow), choose a `vsource` or `iprobe` as the output probe.

If the input-referred noise is desired, specify the input source by using the `iprobe` parameter. Currently, only a `vsource`, an `isource`, or a `port` may be used as an input probe. If the input source is noisy, as is a `port`, the noise analysis computes the noise factor (F) and noise figure (NF). To match the IEEE definition of noise figure, the input probe must be a port with no excess noise and its `noisetemp` must be set to 16.85C (290K). In addition, the output load must be a `resistor` or `port` and must be identified as the `oprobe`.

If `port` is specified as the input probe, both input-referred noise and gain are referred back to the equivalent voltage source inside the port. S-parameter analysis calculates those values in traditional sense.

The noise analysis always computes the total noise at the output, which includes contributions from the input source and the output load. The amount of output noise that is attributable to each noise source in the circuit is also computed and output individually. If the input source is identified, the input-referred noise is computed, which include

s the noise from the input source itself. Finally, if the input source is identified and is noisy, the noise factor and noise figure are computed. Therefore, if:

No = total output noise

Ns = noise at the output due to the input probe (the source)

Nl = noise at the output due to the output probe (the load)IRN = input referred noise

G = gain of the circuit

F = noise factor

© 2003-2020 All Rights Reserved.

NF = noise figure

Then:

IRN = sqrt(No^2 / G^2)

F = (No^2 - NI^2)/Ns^2

NF = 10*log10(F)

When the results are output, No is named `out`, IRN is named `in`, G is named `gain`, F is named `F`, and NF is named `NF`.

Spectre can perform noise analysis while sweeping a parameter. The parameter can be frequency, temperature, component instance parameter, component model parameter, or netlist parameter. If changing a parameter affects the DC operating point, the operating point is recomputed at each step. You can sweep the circuit temperature by giving the parameter name as `temp`, without a `dev` or `mod` parameter. In addition, you can sweep a netlist parameter by giving the parameter name without a `dev`, or `mod` parameter. After the analysis is complete, the modified parameter returns to its original value.

Definition

```
Name  [p]  [n] noise parameter=value ...
```

The optional terminals (p and n) specify the output of the circuit. If you do not specify the terminals, you must specify the output with a probe component.

Parameters

1	`prevoppoint=no`	Use the operating point computed in the previous analysis. Possible values are `no` and `yes`.

Sweep interval parameters

2	`start=0`	Start sweep limit.
3	`stop`	Stop sweep limit.
4	`center`	Center of sweep.
5	`span=0`	Sweep limit span.

© 2003-2020 All Rights Reserved.

6	`step`	Step size, linear sweep.
7	`lin=50`	Number of steps, linear sweep.
8	`dec`	Points per decade.
9	`log=50`	Number of steps, log sweep.
10	`values=[...]`	Array of sweep values.
11	`valuesfile`	Name of the file containing the sweep values.

Sweep variable parameters

12	`dev`	Device instance whose parameter value is to be swept.
13	`mod`	Model whose parameter value is to be swept.
14	`param`	Name of parameter to sweep.
15	`freq (Hz)`	Frequency when parameter other than frequency is being swept.

Probe parameters

16	`oprobe`	Compute total noise at the output defined by this component.
17	`iprobe`	Input probe. Refer the output noise to this component.

State-file parameters

18	`readns`	File that contains an estimate of the DC solution (nodeset).
19	`write`	DC operating point output file at the first step of the sweep.
20	`writefinal`	DC operating point output file at the last step of the sweep.

© 2003-2020 All Rights Reserved.

Initial condition parameters

21	`force=none`	The set of initial conditions to use. Possible values are `none`, `node`, `dev`, and `all`.
22	`readforce`	File that contains initial conditions.
23	`skipdc=no`	Skip DC analysis. Possible values are `no` and `yes`.
24	`useprevic=no`	If set to `yes` or `ns`, use the converged initial condition from previous analysis as ic or ns. Possible values are `no`, `yes`, and `ns`.

Output parameters

25	`save`	Signals to output. Possible values are `all`, `lvl`, `allpub`, `lvlpub`, and `selected`.
26	`nestlvl`	Levels of subcircuits to output.
27	`oppoint=no`	Determines whether operating point information should be computed; if yes, where should it be printed (screen or file). Operating point information is not printed if the operating point computed in the previous analysis remains unchanged. Possible values are `no`, `screen`, `logfile`, and `rawfile`.
28	`separatenoise=no`	Separate noise into sources and transfer functions. Possible values are `no` and `yes`.

Convergence parameters

29	`restart=yes`	Restart the DC solution from scratch if any condition has changed. If not, use the previous solution as an initial guess. Possible values are `no` and `yes`.

© 2003-2020 All Rights Reserved.

Annotation parameters

30	`annotate=sweep`	Degree of annotation. Possible values are `no`, `title`, `sweep`, `status`, and `steps`.
31	`title`	Analysis title.

You can define sweep limits by specifying the end points or the center value and span of the sweep. Steps can be linear or logarithmic, and you can specify the number of steps or the size of each step. You can specify a step size parameter (`step`, `lin`, `log`, or `dec`) to determine whether the sweep is linear or logarithmic. If you do not specify a step size parameter, the sweep is linear when the ratio of stop to start values is less than 10, and logarithmic when this ratio is 10 or greater. All frequencies are in Hertz.

The small-signal analysis begins by linearizing the circuit about an operating-point. By default this analysis computes the operating-point, if it is not known, or recomputes it if any significant component or circuit parameter has changed. However, if an operating point was computed during a previous analysis, you can set `prevoppoint=yes` to avoid recomputing it. For example, if `prevoppoint=yes` and the previous analysis was a transient analysis, the operating point is the state of the circuit at the final time point.

Nodesets help find the DC or the initial transient solution. You can specify nodesets in the circuit description file with nodeset statements, or in a separate file by using the `readns` parameter. When nodesets are specified, Spectre computes an initial guess of the solution by performing DC analysis, while forcing the specified values on to nodes by using a voltage source in series with a resistor whose resistance is `rforce`. Spectre then removes these voltage sources and resistors and computes the required solution from this initial guess.

Nodesets have two important uses. First, if a circuit has two or more solutions, nodesets can bias the simulator towards computing the required solution. Second, these are a convergence aid. By estimating the solution of the largest possible number of nodes, you might be able to eliminate a convergence problem or significantly speed up convergence.

When you simulate the same circuit multiple times, it is recommended that you use both `write` and `readns` parameters and assign the same file name to both parameters. DC analysis then converges quickly even if the circuit has changed since the last simulation, and the nodeset file is automatically updated.

During the initial operating point DC analysis, you may force certain circuit variables to use the values given in the `ic` file, `ic` statements, or `ic` parameter on the capacitors and inductors. The `ic` parameter controls the interaction of various methods of setting the force values. The effects of individual settings are as follows:

© 2003-2020 All Rights Reserved.

`force=none`: All initial conditions are ignored.

`force=node`: The `ic` statements are used, and the `ic` parameters on the capacitors and inductors are ignored.

`force=dev`: The `ic` parameters on the capacitors and inductors are used, and the `ic` statements are ignored.

`force=all`: Both `ic` statements and `ic` parameters are used, with the `ic` parameters overriding the `ic` statements.

If you specify an `ic` file with the `readforce` parameter, force values from the file are used, and any `ic` statements are ignored.

After you specify the initial conditions, Spectre computes the DC operating point with the specified nodes forced to the given value by using a voltage source in series with a resistor whose resistance is `rforce` (see `options`).

Parameter Index

In the following index, the number corresponding to each parameter name indicates where to find the description of that parameter:

annotate 30	log 9	readns 18	stop 3
center 4	mod 13	restart 29	title 31
dec 8	nestlvl 26	save 25	useprevic 24
dev 12	oppoint 27	separatenoise 28	values 10
force 21	oprobe 16	skipdc 23	valuesfile 11
freq 15	param 14	span 5	write 19
iprobe 17	prevoppoint 1	start 2	writefinal 20
lin 7	readforce 22	step 6	

© 2003-2020 All Rights Reserved.

Immediate Set Options (options)

Description

The immediate set options statement sets or changes various program control options. These options take effect immediately and are set while the circuit is read. For more options, see the description of individual analyses.

Note: Options that are dependent on netlist parameter values do not maintain their dependencies on those netlist parameters.

In many cases, a particular option can be controlled by either a command-line or netlist specification. In the situation where both are used, the command-line option takes priority over the setting in the netlist options statement.

Definition

```
Name options parameter=value ...
```

Parameters

Tolerance parameters

1	`reltol=0.001`	Relative convergence criterion.
2	`residualtol=1.0`	Tolerance ratio for residual (multiplies reltol).
3	`vabstol=1.0e-6 V`	Convergence criterion for absolute voltage tolerance.
4	`iabstol=1.0e-12 A`	Convergence criterion for absolute current tolerance.
5	`chargeabstol=1.0e-21 Coul`	Convergence criterion for absolute charge tolerance.

Temperature parameters

6	`temp=27 C`	Temperature.

© 2003-2020 All Rights Reserved.

7	`tnom=27 C`	Temperature measurement of the default component parameter.
8	`tempeffects=all`	Temperature effect selector. If `tempeffects = vt`, only thermal voltage varies with temperature; if `tempeffects = tc`, parameters that start with tc are active and thermal voltage is dependent on temperature; and if tempeffect = all, all built-in temperature models are enabled. Possible values are `vt`, `tc`, and `all`.

Output parameters

9	`save=selected`	Defines node voltage waveforms to be saved. Possible values are `all`, `lvl`, `allpub`, `lvlpub`, `selected`, `none` and `nooutput`. ■ `selected` - voltage waveforms for nodes saved by the user are created, if no node voltage is saved, then `allpub` is used. ■ `allpub` - all node voltages, voltage source currents, inductor currents, and iprobe currents are saved. ■ `lvlpub` - all node voltages, voltage source currents, inductor currents, and iprobe currents down `nestlvl` levels are saved. ■ `none` - no node voltage is saved except one randomly selected node voltage. ■ `nooutput` - disables any waveform writing. ■ `all` - same as `allpub`, additionally saves internal nodes of active devices. ■ `lvl` - same as `lvlpub`, additionally saves internal nodes of active devices.
10	`nestlvl=infinity`	Defines hierarchical level when `save=lvl` or `lvlpub` is used. `nestlvl=1` refers to top level and `nestlvl=2` includes top level and one level below.

© 2003-2020 All Rights Reserved.

11	`currents=selected`	Defines element, device, and inline subckt current waveforms to be saved. Possible values are `all`, `nonlinear`, `selected`, and `none`. ■ `all` - save all element, device and inline subckt currents on all hierarchy levels. ■ `nonlinear` - save currents for all nonlinear elements on all hierarchy levels. ■ `selected` - waveforms for element, device, and inline subckt currents saved by the user are created. ■ `none` - no currents are saved, but individually saved currents are not disabled.
12	`subcktprobelvl=0`	Defines the level up to which the subcircuit terminal current waveforms are automatically saved. ■ `0` - no subcircuit currents are saved. ■ `1` - current through top level subcircuit instance terminals are saved. ■ `2` - current through terminals of subcircuit instances in the top two levels of hierarchy are saved.
13	`pwr=none`	Defines element, subcircuit, and total design power waveforms (extension :pwr, unit W) to be saved. Possible values are `all`, `subckts`, `devices`, `total`, and `none`. ■ `all` - all element, subcircuit, and total power. ■ `subckt` - all subcircuit and total power. ■ `devices` - all element and total power. ■ `total` - total power. ■ `none` - no power.

© 2003-2020 All Rights Reserved.

14	`subcktiprobes=yes`	Defines whether subckt terminal currents saved are calculated by summing up branch currents, or by inserting iprobe elements. Possible values are `no`, `save`, `all`, and `yes`. ■ `all` - Uses iprobes for both, individual subckt port current save and subcktprobelvl statements (Spectre default). ■ `save` - Only inserts iprobes for individual subckt port current save statements but not for subcktprobelvl statements (APS default). ■ `no` - Does not insert any iprobe. ■ `yes` - Maintains backward compatibility by using `all` for Spectre, and `save` for APS.
15	`useprobes=no`	Defines whether element current saved is taken from element or from inserted iprobe element. Possible values are `no` and `yes`. ■ `yes` - Inserts iprobes for individual element current save, and currents statement. ■ `no` - Uses element current, no iprobes inserted.
16	`useterms=default`	Defines whether device/subckt port index (`M1:1`) or name (`M1:d`) is saved when using currents or subcktprobelvl options. Does not apply to individual save statements, that is, save M1:d. Possible values are `default`, `name`, and `index`. ■ `default` - saves device terminal currents with terminal name and subckt terminal currents with terminal index. ■ `index` - saves both with terminal index. ■ `name` - saves both with terminal name.

© 2003-2020 All Rights Reserved.

17	`usenodes=name`	Defines how to identify last part of the hier name with digital in save statement, as device/subckt terminal index first or as terminal/node name first. Possible values are `name` and `index`. Example `save mn.4  name` Here, `4` is the node/terminal name. If there is no node or terminal named `4`, it is used as `index`. If `index` was specified here, then `4` would be identified as terminal index first. If no fourth terminals are found, then `4` will be identified as `name`.
18	`savefilter=none`	Option defines whether global or wildcard save statements create waveforms for all nodes (none), or exclude nodes being only RC connected (rc). This option only impacts waveform creation but not reduction or node preservation inside Spectre. Possible values are `none`, `rc` and `colon`.
19	`saveports=no`	If set to `yes`, subckt ports will be saved when nodes inside subckts are saved with wildcards, i.e. "save * subckt=abc".
20	`save_time_window=0`	Specifies the time window for all saved waveforms. Multiple time windows are supported: `save_time_window=[1u 2u 5u 6u]` If a waveform is saved with an individual time_window argument, then the save_time_window option is ignored for this signal.
21	`wfdebug=none`	Flag to store the measurement signal in a raw file. Possible values are `none` and `measure`.
22	`saveahdlvars=selected`	AHDL variables to output. Possible values are `all`, `selected`, and `allwithnodes`.

© 2003-2020 All Rights Reserved.

23	`spfprobenode=net_only`	When `net_only` is selected, it is the only net name in SPF file that is used to match the wild card in .probe/.ic statements. The hierarchical structure of the net name is restored like pre-layout netlist. When all, the net name in SPF file is stored as pre-layout node name, and the nodes in SPF file are preserved like the current behavior. The wild card in .probe/.ic will match all the nodes and net names. Possible values are `net_only` and `all`.
24	`dspf_nodename=original`	When `original` is selected, the current behavior, .connect is created for nodes cut by DSPF translator. When net_only, it is the only net name in DSPF file that is used to match the wild card in .probe/.ic statements. The hierarchical structure of the net name is restored like pre-layout netlist. When all, the net name in DSPF file is stored as pre-layout node name, and the nodes in DSPF file are preserved like the current behavior. The wild card in .probe/.ic will match all the nodes and net names. Possible values are `original`, `net_only`, and `all`.
25	`sine_sync_period=no`	If set to yes, sine-type source proposes time points exactly at 0, 30, 60, 90, 120, ... degree.. Possible values are `no` and `yes`.
26	`pwl_ignore_error_msg=no`	If set to yes, will ignore pwl source error message if the time of two points are same.. Possible values are `no` and `yes`.
27	`disable_check_nf=no`	If set to yes, disable node folding checking.. Possible values are `no` and `yes`.
28	`src_allbrkpts=no`	If set to `yes`, sets all user-defined points for a pwl-type source as breakpoints in transient analysis. When both the global option and the `allbrkpts` option of individual sources are set, the latter take precedence. Possible values are `no` and `yes`.
29	`redundant_currents=no`	If set to `yes`, save both currents through two terminal devices. Possible values are `no` and `yes`.

© 2003-2020 All Rights Reserved.

30	`ahdldomainerror=warning`	AHDL domain error handling selector. If `ahdldomainerror=error`, incorrect AHDL domain input is treated as an error. If `ahdldomainerror=warning`, incorrect AHDL domain input is treated as warning. If `ahdldomainerror=none`, AHDL domain error is ignored. Possible values are `error`, `warning`, `none`, `erroriter`, and `warniter`.
31	`rawfmt=psfxl`	Output raw data file format. Possible values are `nutbin`, `nutascii`, `psfbin`, `psfxl`, `sst2`, `fsdb`, `wdf`, `uwi`, and `tr0ascii`.
32	`rawfile="%C:r.raw"`	Output raw data file name.
33	`precision="%g"`	Format specification of double for psfascii. Example: "%15.12g" outputs 12 decimal digits in mantissa. The default value "%g" prints 6 decimal digits.
34	`psfversion`	Version of psfxl format to use. Default is `1.2`.
35	`uwifmt`	User-defined output format. To specify multiple formats, use `:` as a delimiter. The option is valid only when waveform format is defined as `uwi`.
36	`uwilib`	Absolute path to the user-defined output format library. This option is used along with `uwifmt`. Use `:` as a delimiter to specify more than one library.
37	`exportfile`	oceanEval output file name.
38	`wfmaxsize=infinity`	Limits the maximum size of the output waveform. This option is valid when `uwi` format is set.
39	`disk_check_thresh=1E8`	The threshold of disk space check
40	`disk_check_autoresume=no`	Automatically resume the simulation once the available disk space is larger than the specified threshold. Possible values are `no` and `yes`.
41	`gennetlistdir=no`	Output netlist directory in logfile. Possible values are `no` and `yes`.
42	`procopt=no`	Fix affinity for the simulation run. Possible values are `no` and `yes`.

© 2003-2020 All Rights Reserved.

Convergence parameters

43	`homotopy=all`	Method used when there is no convergence on initial attempt of DC analysis. You can specify methods and their orders by defining vector setting such as homotopy=[source ptran gmin]. Possible values are `none`, `gmin`, `source`, `dptran`, `ptran`, `arclength`, `tranrampup`, and `all`.
44	`newton=normal`	Method used on DC analysis. You can specify methods newton=[none|normal], and the default value is normal. Possible values are `none` and `normal`.
45	`noiseon_type=all`	Defines the noise sources that are enabled by the noiseon/off_inst option. The default value is `all`. Possible values are `thermal`, `flicker`, `shot`, `ign`, and `all`.
46	`noiseoff_type=all`	Defines the noise sources that are disabled by the noiseon/off_inst option. The default value is `all`. Possible values are `thermal`, `flicker`, `shot`, `ign`, and `all`.
47	`limit=dev`	Limiting algorithms to aid DC convergence. Possible values are `delta`, `log`, `dev`, `l2`, `newton` and `none`.
48	`device_limit=dev`	Limiting method for nonlinear device to aid DC convergence. Possible values are `dev`, `delta` and `dev_delta`.
49	`maxdeltav=0.3 V`	Maximum change in voltage allowed per Newton iteration when limit=delta (default 0.3 V) or limit=l2 (default 10 V).
50	`automaxdeltav=no`	Automatically set `maxdeltav` according to simVDD. Possible values are `no` and `yes`.
51	`automaxdeltavscale=0.1`	Scale for `maxdeltav` calculation when `automaxdeltav=yes`, must be larger than 0 and less than 1.
52	`maxvdddc=3.0 V`	Maximum value of Vdd for DC simulation.
53	`maxphysicalv=infinity V`	Maximum physical voltage allowed in solution.
54	`maxphysicali=infinity A`	Maximum physical current allowed in solution.

© 2003-2020 All Rights Reserved.

55	`maxphysicalmmf=infinity A`	Maximum physical magnetomotive force allowed in solution.
56	`maxphysicalflux=infinity Wb`	Maximum physical flux allowed in solution.
57	`maxphysicalunitless=infinity`	Maximum physical unitless signals allowed in solution.
58	`ahdl_device_limit=dev`	Limiting method for AHDL device to aid DC convergence. Possible values are `dev`, `delta` and `dev_delta`.
59	`ahdl_maxdeltav=1.0 V`	Maximum change in voltage allowed for AHDL devices per Newton iteration when `ahdl_device_limit=delta`. (default `1.0 V`).
60	`gmethod=dev`	Stamp gdev, gnode, or both in the homotopy methods (other than dptran). See the detailed description below the parameter descriptions for more information. Possible values are `dev`, `node`, and `both`.
61	`dptran_gmethod=node`	Stamp gdev, gnode, or both in the dptran (homotopy) methods. Possible values are `dev`, `node`, and `both`.
62	`gmin_start=1.0`	Initial gmin in gmin-stepping (homotopy) methods.
63	`gmin_converge=1.0e-13`	Maximum DC gmin value allow DC to converge.
64	`try_fast_op=yes`	Speed up the DC solution. For hard-to-converge designs, this feature fails and other methods are applied. In corner cases, this feature may have negative effects. If the DC analysis is unusually slow, the memory usage of the processes keeps increasing, or if DC analysis gets stuck even before homotopy methods start, set this option to no. Possible values are `no` and `yes`.
65	`icversion=1`	Convert initial condition to initial guess, when .ic statements exist in the netlist and there are no other options to set IC or nodeset.

© 2003-2020 All Rights Reserved.

66	`dcmaxiters=5`	Maximum number of Newton iterations in DC simulation.
67	`stackfet_dcmaxiters=100`	Maximum number of Newton iterations in DC simulation for StackFET.
68	`dc_diagnose_steps=50`	Number of non-convergence steps for printing out diagnose information in DC simulation.
69	`dc_diagnose_elements=10`	Number of elements connected to non-converged nodes in printing diagnose information in DC simulation.
70	`ptranmaxsteps=200`	Maximum number of steps for ptran phase in DC simulation.
71	`dptranmaxsteps=300`	Maximum number of steps for dptran in fast DC simulation.
72	`ptranmaxsteps1=500`	Maximum number of steps for ptran phase in 1st-stage DC simulation.
73	`dptranmaxsteps1=500`	Maximum number of steps for dptran phase in 1st-stage DC simulation.
74	`dcoptmaxsteps=300`	Maximum number of steps for dcopt in DC simulation.
75	`dcoptautoptransteps`	Initial number of steps for ptran phase in DC simulation with dcoptmaxsteps=auto.
76	`dcoptautodptransteps=100`	Initial number of steps for dptran phase in DC simulation with dcoptmaxsteps=auto.
77	`dcoptic=aps1`	Initial condition of dcopt in DC simulation.
78	`dcoptictype=nodeset`	Initial condition type for dcopt in DC simulation.
79	`reusedc=no`	Reuse dcopt results from second analysis. Possible values are `no`, `dcopt` and `previc`.

© 2003-2020 All Rights Reserved.

80	`icpriority=netlist`	Set the ic priority order. If set to netlist, the order from lowest to highest is readNS, netlist NS, readIC, netlist IC. If set to file, the order from lowest to highest is netlist NS, readNS, netlist IC readIC. Possible values are `file` and `netlist`.
81	`subcktoppoint=no`	Generate operating point parameters for sub-circuit instances. Possible values are `no` and `yes`.
82	`out_dev_stack`	Dump expanded stacked device macro netlist in a separate file and dump complete DC OP output in a separate file.
83	`fastmcmethod`	Enable sss standalone running.
84	`detect_path_vpn`	Define vpn for detecting path.
85	`detect_path_vgnd=[...]`	Define vgnd nodes for detecting path
86	`detect_path_clock=[...]`	Define clock for detecting path.
87	`subcktcap=0`	Select the sub-circuit capacitance output mode. If set to `0`, then the sum of the four capacitances is 0. For example, `cgg + cgs + cgd + cgb = 0`. If set to `1`, the diagonal capacitance is equal to the sum of off-diagonal capacitances. For example, `cgg = cgs + cgd + cgb`.
88	`subcktopfreq=0.159155 Hz`	This parameter is used to set the frequency used in AC analyses run as part of sub-circuit operating point parameter calculations. The default value is `1/(2*pi) Hz`.

© 2003-2020 All Rights Reserved.

Multithreading parameters

89	`multithread=off`	Enable or disable multithreading capability. When multi-threading is enabled but the number of threads (nThreads) is not specified, Spectre will automatically detect the number of processors and select the proper number of threads to use. (See important note about using multithreading in the detailed description below the parameter descriptions). Possible values are `off` and `on`.
90	`forcemt=no`	Force the multithread behaviour, no is to choose number of threads automatically according to circuit size, yes is to use the number of threads specified by user strictly, exit is when number of threads specified more than needed according to circuit size. Defualt is no. Possible values are `no`, `yes` and `exit`.
91	`nthreads`	Specifies the number of threads for multithreading.

© 2003-2020 All Rights Reserved.

Component parameters

92	`rabsshort=0`	When this option is set, all fixed value resistors with absolute value of `R<=rabsshort` are shorted. Default value is 0 for Spectre, and 1m for APS. `rabsshort` can additionally be applied to variable resistors using the option `short_cut_var_elem=yes`.
93	`rabsclamp=0.0` Ω	All fixed value and variable resistors with absolute value of `R<=rabsclamp` are clamped to `rabsclamp`.
94	`rcut=infinity` Ω	Fixed value resistors with `R>rcut` are replaced by open. Default is `infinity` for Spectre and `MAX(1/GMIN, 1e12)` for APS. For `bsource` resistor, default is `1e12` for Spectre and `MAX(1/GMIN, 1e12)` for APS. If `GMIN` is not specified, the value of `MAX(1/GMIN, 1e12)` is `1e12`. `rcut` can additionally be applied to variable resistors using the option `short_cut_var_elem=yes`.
95	`rcut_bsource` (Ω)	When `rcut_bsource=value` is given, all instance bsource resistors with R>value are clamped to value. It has high priority than rcut, if both are set. Default is `1e12 Ohm` for bsource resistor.
96	`rthresh`	All instance resistors with abs(R) < rthresh will use resistance form unless their instance parameter or model parameter overwrites it.
97	`cclamp=0.0 F`	All capacitors, including bsource capacitors, with `C<=cclamp` are clamped to `cclamp`.
98	`ccut=infinity F`	Capacitors with `C<=ccut` are replaced by open. `ccut` can additionally be applied to variable capacitors using the option `short_cut_var_elem=yes`.
99	`cgnd=infinity F`	Coupling capacitors with `C<=cgnd` are split into two grounded capacitors with th same C value.
100	`cmax=infinity F`	All capacitors with `C>=cmax` are clamped to `cmax`.
101	`kcut=0.0`	Fixed value mutual inductors with absolute value of `K<=kcut` are replaced by an open. `kcut` can additionally be applied to variable value mutual inductors using the option `short_cut_var_elem=yes`. Default value is `0` in Spectre and `1m` in APS.

© 2003-2020 All Rights Reserved.

102	`lshort=0 H`	Fixed value inductors with absolute value of `L<=kcut` are replaced by an open. `lshort` can additionally be applied to variable value inductors using the option `short_cut_var_elem=yes`.
103	`dcut=[...]`	Replaces all diode instances using the specified model definitions with an open. `dcut=all` cuts all diode elements.
104	`qcut=[...]`	Replaces all BJT instances using the specified model definitions with an open. `qcut=all` cuts all BJT elements.
105	`vabsshort`	Voltage sources with absolute DC voltage less than or equal to `vabsshort` are shorted. Spectre by default does not short any voltage source, Spectre APS uses a default value of `1e-9 V`.
106	`scalem=1.0`	Model scaling factor.
107	`scale=1.0`	Device instance scaling factor.
108	`scalefactor=1.0`	ScaleFactor for Device Model Technology Scaling. The options parameter scalefactor enables device model providers to scale device technology independent of the design dimension scaling done by circuit designers. The resulting device instance scaling is defined by 'scale * scalefactor'. If the foundry uses a technology scale factor of 0.9 (scalefactor=0.9), and the circuit designer uses a design scale factor of 1e-6 (scale=1e-6), then the compounded scaling of the device instance dimension is 0.9e-6. Unlike options parameter scale, scalefactor cannot be used as a netlist parameter and cannot be altered or used in sweep statements.
109	`ishrink=1.0`	Ishrink factor.
110	`compatible=spectre`	Encourage device equations to be compatible with a foreign simulator. This option does not affect input syntax. Possible values are `spectre`, `spice2`, `spice3`, `cdsspice`, `hspice`, `spiceplus`, `eldos`, `spice`, `mica`, `tispice`, and `pspice`.
111	`approx=no`	Use approximate models. Difference between approximate and exact models is less. Possible values are `no` and `yes`.

© 2003-2020 All Rights Reserved.

112	`auto_minductor=no`	Automatic insertion of missing mutual inductor coupling. For more information, see detailed description below the parameter descriptions. Possible values are `no` and `yes`.
113	`kmax=no`	Sets 1.0 as the maximum absolute value for coupling coefficient of mutual inductors. Possible values are `no` and `yes`.
114	`nport_bbspice_to_linear=yes`	When set to `yes`, if BBSpice fails or generates large fitting errors, and automatically switches nport `interp` option from bbspice to linear. This auto-switching depends on analysis when BBSpice generates large fitting errors. If set to `no`, this feature is disabled. Possible values are `no` and `yes`.
115	`nport_default_interp=auto_switch`	If `nport_default_interp` is set to `auto_switch`, nport automatically chooses `bbspice` for analysis, such as pss and the tstab interval of hb and pss, and `linear` for analyses, such as ac, dc, tran, and sp. All nport elements in the netlist that do not have `interp` set will have `interp` set to the value specified in the global option `nport_default_interp`. If an nport instance has the `interp` option explicitly specified, the instance option will take priority over the global option. Possible values are `spline`, `rational`, `linear`, `bbspice`, and `auto_switch`
116	`nport_default_passivity=disable`	Check and enforce passivity of S-parameter for all nport instances. Default is `disable`, which means that this global option has no effect. If set to a value other than `disable`, all nport elements in the netlist, without a value for passivity explicitly set, will have their passivity argument set to the same value as specified in this global option. If an nport instance already has the passivity option specified, the instance option will take priority, if both are present. Possible values are `no`, `check`, `enforce`, `fit_weak_enforce`, `fit_enforce`, and `disable`.
117	`nportbbsfittedfiledir`	

© 2003-2020 All Rights Reserved.

		The directory to which the BBSpice fitted S-Parameter file will be put. If it is not specified, the file will be in directory named as 'BBSpiceOutput'. If a relative path is specified, the path is relative to the current working directory.
118	`nportirreuse=yes`	Reuse impulse responses data for all nport instances. If no, disable this feature. Possible values are `no` and `yes`.
119	`nportirfiledir`	The directory to which the nport impulse response file will be written. If it is not specified, the file will be written to /home/<username>/.cadence/mmsim/. If a relative path is specified, the path is relative to the current working directory.
120	`nportcompress=yes`	Nport compression improves the efficiency of S-parameter simulation of large nport files when a certain percentage of the ports is unused, i.e., open or short circuited. Nport compression does not impact simulation accuracy. This option turns off compression if set to no and attempts to force compression if set to yes. If left unspecified, compression is on if N>=10 and the ratio of used ports is less than or equal to 0.8. Possible values are no, yes and unspecified. Possible values are `no` and `yes`.
121	`nportunusedportgmin=0.0`	Default is 0, which leaves the port open-circuited. A small value loads open-circuited ports with a finite but large resistance. This introduces a small error in the response, but it induces losses which help obtain a passive response.
122	`nportunusedportrmin=0.0`	Default is 0, which leaves the port short-circuited. A small value will insert a small resistance in place of short circuited ports. This introduces a small error in the response, but it induces losses which help obtain a passive response.
123	`nportcompressfiledir`	The directory where the compressed nport S-parameter file is written to. If unspecified, it is stored in outdir.
124	`nportbbsmaxwaittime=0.5`	

© 2003-2020 All Rights Reserved.

		The maximum waiting time of Spectre if another run locks BBSpice fitting on the same S-parameter file, in unit of hour. Once waiting time reaches the specified value, Spectre exits with error.
125	`hb_lowmem_default_mode=0`	Default lowmem mode for harmonic balance and following small signal analysis. Possible values are `0` and `1`. If '`0`' is set, the low memory mode is turned off in default. If '`1`' is set, the standard low memory mode is turned on in default. If '`lowmem`' option is explicitly specified in HB or following small signall analysis, the analysis option will take priority over this global option.

Noise parameters

126	`noiseon_inst=[...]`	The list of instances to be considered as noisy throughout noise analysis, which include, noise, sp noise, pnoise and tran noise.
127	`noiseoff_inst=[...]`	The list of instances not to be considered as noisy throughout noise analyses, which include noise, sp noise, pnoise and tran noise.

Error-checking parameters

128	`topcheck=full`	Check circuit topology for errors. Possible values are `no`, `min`, `full`, `fixall`, `errmin`, and `errfull`.
129	`iccheck=all`	Check if nodes with initial conditions have capacitive path to ground or connected to ground by vsource. IC for such node is treated as nodeset. Possible values are `no`, `vsource`, `cap`, and `all`.
130	`iccap=0 F`	iccap (capacitance) is added to each IC node to prevent discontinuity between OP point and time t=0 in transient analysis.

© 2003-2020 All Rights Reserved.

131	`ignshorts=no`	Silently ignore shorted components. Possible values are `no` and `yes`.
132	`diagnose=no`	Print additional information that might help diagnose accuracy and convergence problems. Possible values are `no`, `yes`, and `detailed`.
133	`diagnose_start=0 s`	Start time to enable the detailed diagnosis mode.
134	`diagnose_end (s)`	End time to enable the detailed diagnosis mode. Default is transient stop time.
135	`debugstepdrop=no`	Generates warnings on dramatic step size drop and notices when step size is recovered. Possible values are `no` and `yes`.
136	`stepdropsize=100`	The threshold size of step drop to report a dramatic change warning.
137	`checklimitfile`	File to which assert violations are written.
138	`dochecklimit=yes`	Check asserts in the netlist. Possible values are `no` and `yes`.
139	`asserts_silent_init=[...]`	Array of asserts or assert groups which don't generate message during initializing.
140	`checklimitdest=sqldb`	Destination(s) where violations are written. Possible values are `file`, `psf`, `sqldb`, and `both`.
141	`checklimitdetails=no`	Print detailed information about the expression. Possible values are `no` and `yes`.
142	`checklimit_full_duration=no`	If set to `yes`, assert violation includes the duration for which the violation takes place, and uses interpolation when the value exceeds the max/min bound value. Possible values are `no` and `yes`.
143	`probe_compatible=spectre`	Flag to enable or disable optimization for probe wildcard statement. Possible values are `hspice` and `spectre`.

© 2003-2020 All Rights Reserved.

144	`rampsource=yes`	When performing dc hysteresis sweep, rampsource should be set to no. Possible values are `no` and `yes`.
145	`devcheck_stat=yes`	Enable or disable output device-checking statistics. If set to `none`, no statistics related to asserts will be written to either screen or logfile. If set to `sub`, it reports the number of asserts per subckt per assert, which are enabled. If set to `inst`, it reports full instance name of an assert, which is enabled. It is not recommended when there are many asserts.Possible values are `no`, `yes`, `none`, `inst`, and `sub`.
146	`opptcheck=yes`	Check operating point parameters against soft limits. Possible values are `no` and `yes`.

Resistance parameters

147	`gmin=1e-12 S`	gmin (conductance) is added to each nonlinear branch of the device to prevent simulation non-convergence. Large gmin impacts accuracy of current probe, while a small gmin value may cause circuit convergence issue. For a circuit that is sensitive to leakage current, it is recommended to set gmin to a small value or zero.
148	`gmindc=1e-12 S`	Minimum conductance across each non-linear device in DC analysis. If gmindc is not specified, the value of gmindc will be equal to gmin. Default value is 1.0e-12.
149	`gminfloat=1e-12 S`	Minimum conductance added between the dc floating node and the ground node. It is to avoid matrix singular error for dc analysis. If the gminfloat is not specified, its value will be decided by the gminfloatdefault parameter.
150	`dcopttol=1e-8 S`	Tolerance used for dcopt analysis.
151	`gshunt=0.0 S`	Minimum conductance added for all nodes in tran analysis.
152	`gshuntdc=0.0 S`	Minimum conductance added for all nodes in dc analysis.
153	`gmindcmax=0 S`	The maximum value that gmindc can be increased to during the automatically increasing gmindc method for convergence. The default value is gmindc.

© 2003-2020 All Rights Reserved.

154	`dcdampsol=no`	Damp DC solution during Newton iteration to assist convergence. Possible values are `no` and `yes`.
155	`dcfloatno-decheck=no`	Relax DC floating node residue check in DC simulation to assist convergence. Possible values are `no` and `yes`.
156	`dcuseprevic=no`	DC use previous analysis OP point as nodeset for the current DC analysis. Possible values are `no` and `yes`.
157	`dcoptfilter=yes`	Filter first-stage DC solution in DCOPT process. Possible values are `no` and `yes`
158	`dcoptfiltervtol=0 V`	The voltage tolerance for first-stage DC solution filtering in DCOPT process.
159	`dc_auto_rforce=no`	Automatically adjust the rforce value in DC simulation to get accurate IC setting. Possible values are `no` and `yes`.
160	`ignore_blowup=no`	Ignore blowup signal in simulation. Possible values are `no` and `yes`.
161	`dc_ic_abstol=1.0e-6`	IC absolute toleration for DC IC accuracy check.
162	`dc_ic_reltol=0.001`	IC relative toleration for DC IC accuracy check.
163	`dccheck=no`	DC solution physical check. If set to `yes`, DC will be rerun with `limit=delta` if the solution obtained by the first run is not physical. If set to `detail`, the solution differences between the two runs will be printed out in the log file. Possible values are `no`, `yes` and `detail`.
164	`dc_check_multiple_solutions=no`	Check for DC multiple solutions. Possible values are `no` and `yes`.
165	`dc_solution_vabstol=1.0e-3`	DC solution voltage absolute toleration for multiple solution check.
166	`dc_solution_vreltol=0.1`	

© 2003-2020 All Rights Reserved.

		DC solution voltage relative toleration for multiple solution check.
167	`dc_solution_iabstol=1.0e-6`	DC solution current absolute toleration for multiple solution check.
168	`dc_solution_ireltol=0.1`	DC solution current relative toleration for multiple solution check.
169	`gmin_check=max_v_only`	Specifies that effect of `gmin` should be reported if significant. Possible values are `no`, `max_v_only`, `max_only` and `all`.
170	`fix_singular_matrix=no`	Fix matrix singular issue by inserting gmin. Possible values are `no`, `yes`, `print`, and `both`.
171	`rforce=1` Ω	Resistance used when forcing nodesets and node-based initial conditions.
172	`rclamp_bsource=1` Ω	When `rclamp_bsource=`*`value`* is given, all instance bsource resistors with `R<`*`value`* are clamped to the specified value. It has higher priority than `rclamp` if both are set. Default is 0.001 Ohm for the bsource resistor.
173	`ahdl_exp_limit=1 (no)`	When set to a positive value, ahdl exp() function will use it to limit exp() function arguments.

Quantity parameters

174	`value="V"`	Default value quantity.
175	`flow="I"`	Default flow quantity.
176	`quantities=no`	Print quantities. If quantities=min, the simulator prints out all defined quantities; if quantities=full, the simulator also prints a list of nodes and their quantities. Possible values are `no`, `min`, and `full`.

© 2003-2020 All Rights Reserved.

Annotation parameters

177	`audit=detailed`	Print time required by various parts of the simulator. Possible values are `no`, `brief`, `detailed`, and `full`.
178	`inventory=detailed`	Print summary of components used. Possible values are `no`, `brief`, `detailed`, and `full`.
179	`narrate=yes`	Narrate the simulation. Possible values are `no`, `yes`, and `compact`.
180	`debug=no`	Give debugging messages. Possible values are `no` and `yes`.
181	`info=yes`	Give informational messages. Possible values are `no` and `yes`.
182	`note=yes`	Give notice messages. Possible values are `no` and `yes`.
183	`maxnotes=5`	Maximum number of times a notice is issued per analysis. **Note:** This option has no effect on notices issued as part of parsing the netlist. Use the -maxnotes command-line option to control the number of all notices issued.
184	`stver_note=no`	Give -stver suggestion warning for invalid parameter. Possible values are `no` and `yes`.
185	`warn=yes`	Display warning messages. Possible values are `no` and `yes`.
186	`maxwarns=5`	Maximum number of times a warning message is issued per analysis. **Note:** This option has no effect on warnings issued as part of parsing the netlist. Use the -maxwarns command-line option to control the number of all warnings issued.
187	`maxwarnstolog-file=5`	Maximum number of times a warning message is printed to the log file per analysis. **Note:** This option has no effect on warnings printed as part of parsing the netlist. Use the -maxwarnstolog command-line option to control the number of all warnings printed to the log file.

© 2003-2020 All Rights Reserved.

188	`maxnotestolog-file=5`	Maximum number of times a notice message is printed to the log file per analysis. **Note:** This option has no effect on notices printed as part of parsing the netlist. Use the -maxnotestolog command-line option to control the number of all notices printed to the log file.
189	`error=yes`	Generate error messages. Possible values are `no` and `yes`.
190	`digits=5`	Number of digits used when printing numbers.
191	`measdgt=0`	Number of decimal digits (in floating point numbers) in measurement output in mt0 format.
192	`notation=eng`	The notation to be used to display real numbers to the screen. Possible values are `eng`, `sci`, and `float`.
193	`cols=80`	Width of screen in characters.
194	`colslog=80`	Width of log-file in characters.
195	`title`	Circuit title.
196	`simstat=basic`	Print simulation phase statistics report. Possible values are `basic` and `detailed`.

Matrix parameters

197	`pivotdc=no`	Use numeric pivoting on every iteration of DC analysis. Possible values are `no` and `yes`.
198	`dc_pivot_check=no`	During DC analysis, the numeric pivoting is only performed when bad pivot is detected. Possible values are `no` and `yes`.
199	`tran_pivot_-check=no`	During Tran analysis, perform numerical pivoting when bad pivot is detected. Possible values are `no` and `yes`.
200	`tran_pivot_thresh-old=0.00001`	When tran_pivot_check=yes, the relative pivot threshold below which the matrix will be reordered.
201	`checklimit_skip_subs=[...]`	

© 2003-2020 All Rights Reserved.

Array of subcircuit masters or subcircuit master patterns to be skipped in device checking. Patterns can have any wildcard symbols.

202 `checklimit_skip_file`

File which contains the subcircuit masters or subcircuit master patterns to be skipped in device checking. Patterns can have any wildcard symbols.

203 `checklimit_skip_insts=[...]`

Array of instances to be skipped in device checking. Instances can have any wildcard symbols.

204 `checklimit_skip_insts_file`

File containing the instances to be skipped in device checking. Instances can have any wildcard symbols.

205 `checklimit_skip_ie_connect_devices=0`

The devices connected to AMS IE elements (hierarchy level must be lesser than the value specified for this option) will be skipped in device checking.

206 `pivrel=0.001` Relative pivot threshold.

207 `pivabs=0` Absolute pivot threshold.

208 `complexpivrel=1e-5`

Relative pivot threshold for small signal analyses.

209 `preorder=partial` Try this option when simulation runs out of memory or if the simulation is unreasonably slow for the size of your design. It controls the amount of matrix pre-ordering that is done and may lead to much fewer matrix fill-ins in some cases. Known cases include designs with large number of small resistors and large number of behavioral instances containing voltage based equations. Possible values are `partial` and `full`.

210 `limit_diag_pivot=yes`

If set to yes, there is a limit on the number of matrix fill-ins when selecting a pivot from a diagonal. For backward compatibility, set this option to no. Possible values are `no` and `yes`.

© 2003-2020 All Rights Reserved.

211	`rebuild_matrix=no`	If set to yes, rebuild circuit matrix at the beginning of ac, dc, dcmatch, montecarlo, pz, stb, sweep, tdr, and tran analyses. This is to ensure consistent matrix ordering at the beginning of the analyses for consistent results. Notice that rebuild circuit matrix can result in performance overhead. Possible values are `no` and `yes`.

Miscellaneous parameters

212	`ckptclock=0 (s)`	Clock time checkpoint period. Default is 1800s for Spectre.
213	`param_top-change=yes`	If set to yes, Spectre will support parametric topology change caused by device internal node changes when the device, model, or netlist parameter value is altered. Possible values are `no` and `yes`.
214	`redefinedpar-ams=error`	Specify whether parameters can be redefined in the netlist. When set to warning or ignore, the simulator allows you to redefine parameters in the netlist. However, it honors only the last definition of the redefined parameter. Depending on the value set, the simulator displays warning messages for the redefined parameters or does not display any message. When set to error, the simulator does not allow you to redefine parameters in the netlist and displays an error message. Possible values are `error`, `ignore`, `warning`, and `warn`.
215	`duplicate-ports=error`	Specify whether duplicate ports are allowed in the definition of the subcircuit. When set to warning or ignore, the duplicate ports are shorted. Depending on the value that is set, the simulator displays warning messages for the duplicate ports or does not display any message. When set to error, the simulator does not allow duplicate ports in the definition of the subcircuit and displays an error message. Possible values are `error`, `ignore`, and `warning`.

© 2003-2020 All Rights Reserved.

216	`duplicate_sub-ckt=error`	Specify whether duplicate subcircuit definitions are allowed. When set to warning or ignore, the simulator allows duplicate subcircuit definitions. However, it honors only the last subcircuit definition. Depending on the value that is set, the simulator displays warning messages for the duplicate subcircuit definitions or does not display any message. When set to error, the simulator does not allow duplicate subcircuit definitions and displays an error message. Possible values are `error`, `ignore`, and `warning`.
217	`duplicatein-stance=error`	Specify whether duplicate instance definitions are allowed. When set to warning or ignore, the simulator allows duplicate instance definitions. However, it honors only the last instance definition. Depending on the value that is set, the simulator displays warning messages for the duplicate instance definitions or does not display any message. When set to error, the simulator does not allow duplicate instance definitions and displays an error message. Possible values are `error`, `ignore`, and `warning`.
218	`duplicate-model=error`	Specify whether duplicate model definitions are allowed. When set to warning or ignore, the simulator allows duplicate model definitions. However, it honors only the last model definition. Depending on the value that is set, the simulator displays warning messages for the duplicate model definitions or does not display any message. When set to error, the simulator does not allow duplicate model definitions and displays an error message. Possible values are `error`, `ignore`, and `warning`.
219	`rmdg_preserve=no`	Specifies whether the setting to remove dangling instances should be retained for the masters that have `preserve_master=yes`. Possible values are `no` and `yes`.
220	`warning_limit=5`	The maximum number of times the warnings specified in immediately following the warning_id parameter should be displayed.
221	`use_veriloga=0`	Determine whether to take Verilog-A as high priority. If set to '1', the Verilog-A model takes priority over the other subckt/models. If set to '0', the Verilog-A model does not take priority over the other subckt/models..

© 2003-2020 All Rights Reserved.

222	`warning_change_severity=warning`	Change the severity of warning messages specified in immediately following warning_id. Possible values are `error`, `warning`, and `notice`.
223	`warning_id=[...]`	Vector of warning message identifiers, such as [SPECTRE-16462 SPECTRE-16684]. Used in conjunction with warning_limit or warning_change_severity.
224	`preserve_master=[...]`	Preserve all instances of the specified masters.
225	`preserve_inst`	Preserve the instances specified in the vector. Use `preserve_inst=all` to preserve all instances.
226	`preserve_subckt=[...]`	Preserve all instances within the specified subcircuits.
227	`preserve_assert=lazy`	Whether to execute the preservation for voltage check for assert statements. If the value is lazy, only execute the preservation for current checking; otherwise it will execute complete preservation. Possible values are `lazy` and `force`.
228	`soa_warn=yes`	If `soa_warn` is `no`, SOA checks will be disabled. Possible values are `no` and `yes`.
229	`idovvdsclamp=1e-9`	Option to tune the clamp value of IdovVds, default value is 1e-9.
230	`soa_dest=file`	Destination(s) where SOA violations are written. If set to file, violations will be written in log. If set to sqldb, violations will be written in sqldb. Possible values are `file` and `sqldb`.
231	`BHT_New_Eval=1`	Option to choose which kind of evaluation function to use, 0 for old version with Vciei derivatives, and 1 for new one without Vciei derivatives.
232	`cmi_opts=[...]`	Option for customer cmi.
233	`parasitics`	Set parasitics for RC reduction. When used as the scoped option, specify the "+mts" command-line option. The option has higher priority than the value from the command line option, "+parasitics". When used as a global option, the value from the command line, "+parasitics", has a higher priority.

© 2003-2020 All Rights Reserved.

Sensitivity parameters

234	`sensfile`	Output sensitivity data file name.
235	`sensformat=tabular`	Format of sensitivity data. Possible values are `tabular` and `list`.
236	`senstype=partial`	Type of sensitivity being calculated. Possible values are `partial` and `normalized`.
237	`sensfileonly=no`	Enable or disable raw output of sensitivity. results. Possible values are `no` and `yes`.
238	`sensbinparam=no`	Sensitivity for binning models. Possible values are `no`, `uncorrelated`, and `correlated`.
239	`paramrangefile`	Parameter range file.

Performance parameters

240	`minr=0.0`	All parasitic resistors inside devices less than global minr will be removed. The order of checking devices is the follows: 1. Check if resistors are smaller than local minr. If yes, check if it is a MOSFET or BJT. If it is a MOSFET, drop the resistor, if it is BJT, clamp to the minr value, and give a warning message for both cases. 2. Check global minr, All Parasitic resistors less than global minr are removed and a warning message is issued. 3. If the resistor is not removed and is smaller than 0.001, issue a warning.
241	`short_bjtr=0.0`	All parasitic resistors inside bipolar devices less than global short_bjtr will be removed. This option is applied to all bipolar junction transistors.
242	`cscalefactor=1e-3`	Scaling factor for large capacitor.

© 2003-2020 All Rights Reserved.

243	`cthresh=1e38`	Large capacitors can cause transient convergence problems, especially as the time-step shrinks. This is similar to the issues that small resistors cause. There is an alternative exact representation of a capacitor, which does not suffer from this problem, but can introduce an equation to be solved. If a capacitance is greater than `cthresh`, then the alternative formulation is used. Accuracy is not impacted by the change. The `cthresh` option has lower priority than `cthresh` parameter on the capacitor instance definition.
244	`highvoltage=no`	Enables optimized Spectre settings for high voltage designs including voltage, and current binning, excluding VerilogA and dangling nodes from convergence checks, and optimized large capacitance handling. Possible values are `no` and `yes`.
245	`vrefgnd`	Specify reference ground.
246	`macro_mode`	Specify macro_mode configuration.
247	`verilogalang=relax`	AHDL Verilog-A language syntax check mode selector. If verilogalang=strict, show archaic syntax input as an error during Verilog-A parsing; If verilogalang=relax, show archaic syntax input as a warning during Verilog-A parsing. Possible values are `strict` and `relax`.
248	`minstepversion=1`	Minstep algorithm flow control. If minstepversion=0, desperate big jump is taken when minstep is reached. If minstepversion=1, a forward/backward search algorithm is taken to find a converged solution at small step size. By default, minstepversion=1.
249	`max_minstep_non-conv=200`	The maximum number of convergence failures allowed below minstep within 5% of stop time.
250	`max_approach_min-step=300`	The maximum number of times allowed to approach minstep within 5% of stop time.
251	`max_consecu-tive_minstep=1000`	The maximum number of consecutive steps allowed to be less than 10*minstep.
252	`discontinuity=no`	Detect device discontinuity and enable robust transient simulation. Possible values are `no` and `robust`.

© 2003-2020 All Rights Reserved.

253	`autostop=no`	If yes, tran analysis is terminated when all event-type measurement expressions have been evaluated. Event-type expressions use thresholding, event, or delay type functions. If the value is spice, autostop is consistent with spice simulator. Possible values are `no`, `yes`, and `spice`.
254	`large_newton_reject=1`	Reject Newton iteration when large residue or delta solution occurs during transient analysis.

Model parameters

255	`soft_bin=singlemodels`	If set to `singlemodels`, it is used only on non-binned models.Possible values are `singlemodels`, `no` and `allmodels`.
256	`xpssdc_disable_output=1`	When set to 1, disable waveform output for xpssdc child process.
257	`filter_wildcard_colon_ic=0`	When set to 1, ignore colon node in ic wildcard expansion.
258	`filter_wildcard_terminal_ic=0`	When set to 1, ignore terminal in ic wildcard expansion
259	`sram_macro_model=0`	When set to 1, the 6T mosfets in a cell will be replaced by sramCell instance.
260	`sram_macro_model_diverge_at_large_wl=1`	When set to 1, diverge the cell when wl > 0.3 vdd.
261	`sram_macro_model_adjust_monotonic=0`	When set to 1, adjust vp voltage to confirm monotonic.
262	`sram_macro_model_keep_tbl_coeff=0`	When set to 1, store the cube resolved coeff.
263	`sram_macro_model_reset_cell_group_prop_at_each_iter=0`	When set to 1, reset the cell group prop as unevaluated at each iteration, instead of at each partition's tranload.

© 2003-2020 All Rights Reserved.

264 `sram_macro_model_wl_dynamic_switch=1`

When set to 1, use bbd tran solve for sram cell when wl > 0.3 vdd.

265 `sram_macro_model_fix_state_in_dc=1`

When set to 1, we add rforce to miniSolver's state node to force ic.

266 `sram_macro_model_eliminate_osc=0`

When set to 1, use fast evaluate type in the oscillation for evaluation, when set to 2, use more accurate evaluate type in the oscillation for evaluation.

267 `sram_macro_model_eliminate_osc_thr=4`

Specify the oscillation threshold to enable oscillation elimination.

268 `sram_macro_model_adjust_monotonic_shift_vp=1`

The value is used to adjust non-monotonic region.

269 `sram_macro_model_iter_ratio=1`

While sram macro model is used, use the ratio to extend the maximal iteration limit.

270 `sram_macro_model_limiting=1`

The value is used to control limiting method for sram cell, 1: limited in DC; 2: limited in TRAN; 3: limited in DC and TRAN.

271 `sram_macro_model_stampa_non_newton=0`

When set to 1, the maximal iteration in miniSolver stampA stage will be 1 to force converge.

272 `sram_macro_model_group_max_size=301`

The maximal cell number a bit-line group can have for group_cells=4.

273 `sram_macro_model_st0_method=0`

The option determines how to check st0 as low or high.

274 `sram_macro_model_group_cells=0`

When set to 1, group cells of the same bit-line to reuse unique Prop.

275 `sram_macro_model_bypass=0`

When set to 1, bypass interpolation by extract DevProp.

276 `sram_macro_model_stamp_rforce=0`

© 2003-2020 All Rights Reserved.

When set to 1, stamp rforce in miniSolver in DC stage.

277 `sram_macro_model_stamp_gmin=1`

When set to no, skip gmin (1e-14) stamping in miniSolver.

278 `sram_macro_model_convert_mtm_to_cmi=0`

When set to 1, convert mtm to cmi for mosfet inside cell.

279 `sram_macro_model_node_folding=1`

When set to 1, force node folding for sram macro model.

280 `sram_macro_model_merge_port_cap=0`

When set to 1, count all cell's connected node into cell's coupling cap candidate.

281 `sram_macro_model_stampa=1`

When set to 1, stamp G+C/h s.c. for power down stage.

282 `sram_macro_model_disable_bypass_stampa=1`

When set to 1, disables bypass in stampA.

283 `sram_macro_model_dynamic_switch=0`

When set to 1, don't use table when vp < 0.3 * vdd; when set to 2, use G+C/h and I+dQ/h as cell property, and disable bypass for cell.

284 `sram_macro_model_skip_node_set=0`

When set to 1, skip nodeset for state node.

285 `sram_macro_model_enable_active_cell=0`

When set to 1, set sram macro model on active cells.

286 `sram_macro_model_tran_solve=0`

When set to 1, the sramCell instance use tran solve for internal state.

287 `sram_macro_model_fast_out=0`

When set to 1, enable fast out when sram_macro_model=1.

288 `sram_macro_model_bbm_solve=0`

When set to 1, the sramCell use bbm DC solve to perform S.C. ; when set to 0, use st0, st1 as vn, vp.

289 `sram_macro_model_power_down_table=0`

When set to 1, use 4D table in first time point when vp < 0.3vdd.

© 2003-2020 All Rights Reserved.

290 `sram_macro_model_bbm_solve_dc=0`

When set to 1, the sramCell use bbm DC solve to perform S.C. in DC stage; when set to 0, use st0, st1 as vn, vp.

291 `sram_macro_model_enable_cplcap_min=0`

When set to 1, split cplcap inside cell based on cplcapmin.

292 `sram_macro_model_bbm_ignore_non_converge=0`

When set to 1, the sramCell use previous state node voltages to stamp G/C/I/Q.

293 `sram_macro_model_reconn_st_cplcap_to_port=0`

When set to 1, reconnect the coupling from idle state node to cell's port, add ground cap on state node; while set to 2, reconnect the coupling cap from idle state node to port, and ignore the cap effect on state node.

294 `sram_macro_model_assert_active_wl=0`

When set to 1, the sramCell instance asserts while the wordline bias > 0.3.

295 `sram_macro_model_bucket_count=20000`

When the value is non-zero, use the value to initialize hash table bucket size.

296 `sram_macro_model_adjust_monotonic_bits=264`

The bitwise value denotes which op index to check monotonic for sram macro model.

297 `sram_macro_model_debug_ms_level=0`

The bitwise value denotes which debug message to dump for miniSolver.

298 `sram_macro_model_use_table=0`

When set to 1, the sram cell can reuse prop while the voltages meets equal criteria.

290 `sram_macro_model_quantity=0.001`

This parameter is used to tune sram macro model voltage key quantity.

300 `sram_macro_model_min_ratio=0.3`

This parameter is used to control minimal voltage to enter stamp A region.

301 `sram_macro_model_max_ratio=0.35`

© 2003-2020 All Rights Reserved.

This parameter is used to control maximal wl value as vdd * this ratio.

302 `sram_macro_model_tstep=1e-12`

This parameter is used to calculate sram macro model S.C..

303 `sram_macro_model_debug_start_time=0`

This parameter is used to dump the debug message while the time > the value.

304 `sram_macro_model_debug_end_time=0`

This parameter is used to dump the debug message while the time < the value.

305 `sram_macro_model_debug_level=0`

This parameter is used to turn on sram macro model debug information.

306 `sram_macro_model_level=0`

This parameter is used to tune macro modeling.

307 `sram_macro_model_bbm=1`

This parameter is used to setup bbm value for macro modeling.

308 `sram_macro_model_compensate_bulk_current=0`

This parameter is used to control whether to compensate bulk current.

309 `rcr_net_vpn` The virtual power node names, globally.

310 `rcr_net_vpn_groups`

The virtual power node groups, globally

311 `rcr_net_node_auto_res_bump`

The auto res_bump value specified on the value.

312 `rcr_net_node_fmax`

The fmax specified will be applied to the RCR engine of the RC network which contains the node.

313 `rcr_net_preserve_pn_ports=0`

When set to 1, preserves ports of parasitic networks that are connected to a DC vsource.

314 `rcr_net_preserve_ground_reg_ports=0`

When set to 1, preserves ports of parasitic networks that are connected to a ground regular type.

© 2003-2020 All Rights Reserved.

315 `rcr_net_preserve_vpn_ports=0`

When set to 1, preserves ports of parasitic networks that are connected to a VPN source.

316 `rcr_net_preserve_active_word_line_ports=0`

When set to 1, preserves ports of parasitic networks that are connected to an active word-line node.

317 `rcr_net_preserve_idle_word_line_ports=0`

When set to 1, preserves ports of parasitic networks that are connected to an idle word-line node.

318 `rcr_net_preserve_active_bit_line_ports=0`

When set to 1, preserves ports of parasitic networks that are connected to an active bit-line node.

319 `rcr_net_preserve_idle_bit_line_ports=0`

When set to 1, preserves ports of parasitic networks that are connected to an idle bit-line node.

320 `rcr_net_preserve_active_state_ports=0`

When set to 1, preserves ports of parasitic networks that are connected to an active-state node.

321 `rcr_net_preserve_idle_state_ports=0`

When set to 1, preserves ports of parasitic networks that are connected to an idle-state node.

322 `rcr_net_preserve_san_to_dout_ports=0`

When set to 1, preserves ports of parasitic networks that are connected to a san-to-dout node.

323 `rcr_net_preserve_din_to_bitline_ports=0`

When set to 1, preserves ports of parasitic networks that are connected to a din-to-bitline node.

324 `rcr_net_preserve_san_ports=0`

When set to 1, preserves ports of parasitic networks that are connected to a san node.

325 `rcr_net_preserve_active_sa_to_gnd_ports`

When set to 1, preserves ports of parasitic networks that are connected to active nodes from sa to gnd.

326 `rcr_net_preserve_idle_sa_to_gnd_ports=0`

When set to 1, preserves ports of parasitic networks that are connected to idle nodes from sa to gnd.

© 2003-2020 All Rights Reserved.

372 `rcr_net_preserve_active_clk_to_sgc_ports=0`

When set to 1, preserves ports of parasitic networks that are connected to active nodes from clk to sa-to-gnd controlling gate.

328 `rcr_net_preserve_idle_clk_to_sgc_ports=0`

When set to 1, preserves ports of parasitic networks that are connected to idle nodes from clk to sa-to-gnd controlling gate.

329 `rcr_net_preserve_active_heavy_load_ports=0`

When set to 1, preserves ports of parasitic networks that are connected to active heavy load nodes.

330 `rcr_net_preserve_idle_heavy_load_ports=0`

When set to 1, preserves ports of parasitic networks that are connected to idle heavy load nodes

331 `rcr_net_preserve_drain_source_signals=0`

When set to 1, preserves ports of parasitic networks that are connected to a source and drain device terminals, when set to 2, preserves drain/source on idle reg network, preserves on all ports for other no type network, when set to 3, preserves drain/source ports, when set to 4, do not preserve port for idle REG network, preserve all ports or drain/source port on other no type networks.

332 `rcr_net_preserve_idle_reg_drain_source=0`

When set to 1, preserves drain/source on idle reg network.

333 `rcr_net_preserve_active_reg_drain_source=0`

When set to 1, preserves drain/source on idle reg network.

334 `rcr_net_merge_pn_idle_state_ports=0`

When set to 1, allows merging of those ports of power or vpn parasitic networks, that are connected to idle state nodes.

335 `rcr_net_active_word_line_conly=0`

When set to 1, short all resistors of the parasitic networks that are connected to an active word-line.

336 `rcr_net_idle_word_line_conly=0`

When set to 1, short all resistors of the parasitic networks that are connected to an idle word-line.

© 2003-2020 All Rights Reserved.

337 `rcr_net_active_bit_line_conly=0`

When set to 1, short all resistors of the parasitic networks that are connected to an active bit-line.

338 `rcr_net_idle_bit_line_conly=0`

When set to 1, short all resistors of the parasitic networks that are connected to an idle bit-line.

339 `rcr_net_active_state_conly=0`

When set to 1, short all resistors of the parasitic networks that are connected to an active state.

340 `rcr_net_idle_reg_conly=0`

When set to 1, short all resistors of the parasitic networks that are connected to an idle reg signal.

341 `rcr_net_idle_state_conly=0`

When set to 1, short all resistors of the parasitic networks that are connected to an idle state.

342 `rcr_net_state_idle_vpn_conly=0`

When set to 1, short all resistors of VPN parasitic networks that are connected to idle state parasitic networks.

343 `rcr_net_floating1_conly=0`

When set to 1, short all resistors of FL1 parasitic networks that are connected to idle state parasitic networks.

344 `rcr_net_floating2_conly=0`

When set to 1, short all resistors of FL2 parasitic networks that are connected to idle state parasitic networks.

345 `rcr_net_floating3_conly=0`

When set to 1, short all resistors of FL3 parasitic networks that are connected to idle state parasitic networks.

346 `rcr_net_ground_conly=0`

When set to 1, short all resistors of ground parasitic networks.

347 `rcr_net_ground_reg_conly=0`

When set to 1, short all resistors of ground reg parasitic networks.

© 2003-2020 All Rights Reserved.

348 `rcr_net_active_sa_to_gnd_conly=0`

When set to 1, short all resistors of the parasitic networks that are connected to active nodes from sa to gnd path.

349 `rcr_net_idle_sa_to_gnd_conly=0`

When set to 1, short all resistors of the parasitic networks that are connected to idle nodes from sa to gnd path.

350 `rcr_net_dump_protect=0`

This parameter is used to dump all preserved nodes in RCR flow.

351 `rcr_net_option_file`

User specified RCR option for each specific node.

352 `rcr_fmax=1` This parameter is used to set the max frequency used by rc reduction.

353 `rcr_rshort=1.00E-03`

This parameter is used to set the minimum value of resistor that should be cut.

354 `rcr_cgnd=1.00E-18`

This parameter is used to set the minimum value of capacitance that should be decoupled to ground.

355 `rcr_net_cgnd=1.00E-18`

This parameter is used by the rc net flow to set the minimum value of capacitance that should be decoupled to ground.

356 `mosvar_noscale=0` Enable(0)/Disable(1) scale support for mosvar model.

357 `dcmatchscaling=0` Backward compatibility controller for dcmatch scaling behavior.

358 `dcmatch_fitting=0` Dcmatch fitting (sigmaOut) for customer.

359 `etmiprntfd=0` Output the TMI result file. By default it is closed.

360 `dump_global_options=0`

Internal option for RelXpert to dump all the global options. By default it is closed.

361 `tmiaging_remove_slash=0`

Internal option to remove the slash character before dot in instance name. By default it is closed.

362 `output_compact_mapping=0`

© 2003-2020 All Rights Reserved.

		Internal option for RelXpert to output compact mapping file. By default it is closed.
363	`tmipath`	Location of TMI shared object libraries to be used by tmiBsim4 models.
364	`tmiflag=0`	Activate TMI flow. By default TMI flow is not activated.
365	`omipath`	Location of OMI shared object libraries to be used by omi models.
366	`omiflag=0`	Activate OMI flow. By default OMI flow is not activated.
367	`omiage=0`	Activate OMI Aging model flow. By default, it is not activated.
368	`omisave=1`	Enable or disable aging information to be saved.
369	`omiinput`	Input file name, including the full path to read back TMI information for aging model.
370	`omisort`	Sort aging information.
371	`tmiage=0`	Activate TMI Aging model flow. By default, it is not activated.
372	`tmiinput`	input file name including full path to read back TMI information for aging model.
373	`tmisave=1`	Enable or disable aging information to be saved.
374	`etmiusrinput`	This option can be set in model files or netlists.
375	`tmisort`	Sort aging information.
376	`print_including=no`	Enable Spectre to print including information in include statement. Possible values are `no` and `yes`.
377	`annotateonalter=yes`	Annotate on all alter statements. Possible values are `no` and `yes`.
378	`reelaborateonalter=force`	Whether re-elaborate for every alter statement. Possible values are `lazy` and `force`.
379	`scale_redefined=ignore`	Disallow redefining of the option scale in netlist. Possible values are `error`, `ignore` and `warning`.
380	`printstep=no`	Enable Spectre to print results by equal step defined in .tran statement. Possible values are `no` and `yes`.

© 2003-2020 All Rights Reserved.

381	`inlinesubcktcurrent=subckt`	Save inline subcircuit terminal current as inline device current or subcircuit current. By default, inline subckt current is saved. Possible values are `device` and `subckt`.
382	`nonconv_topnum=10`	Top number of non-convergence nodes to be printed public.
383	`dotprobefmt=flat`	Print .probe signal with original name or hierarchical name. Possible values are `flat` and `hier`.
384	`hierprobe=hier`	Print .probe signal hierarchically or flatten.Possible values are `flat` and `hier`.
385	`dcmmod=0`	DCMismatch analysis version selector. If set to 1 or 3. uses Bsim short-channel mismatch equation for BSIM3 and BSIM4 devices; if set to 2 or 3, provides compatibility with Monte Carlo analysis.
386	`vthmod=std`	Vth output selector. `std` outputs model equation Vth; `vthcc` outputs constant current Vth and may impact simulation performance; `vthcc_ext` outputs constant current Vth on external nodes. Possible values are `std`, and `vthcc`, `vthcc_ext`.
387	`vdsatmod=std`	Vdsat output selector. Possible values are std, gds and slow_gds.
388	`vdsat_c=0.08`	Coefficient for Gds based Vdsat.
389	`vdsat_vdl=0.3 V`	Coefficient for Gds based Vdsat.
390	`vdsat_vadj=0.0 V`	Coefficient for Gds based Vdsat.
391	`ivthn=0.0 A`	NMOS Vth current parameter.
392	`ivthp=0.0 A`	PMOS Vth current parameter.
393	`ivthw=0.0 m`	Width offset for constant current Vth.
394	`ivthl=0.0 m`	Length offset for constant current Vth.
395	`ivth_vdsmin=0.05 V`	Minimum Vds in constant current Vth calculation public.
396	`gform_vcr`	Use Gform for VCR device. Specify 1 for yes and 0 for no. Default is no.

© 2003-2020 All Rights Reserved.

397 `bin_relref=no` When a global relref is used, signals share a common reference value for convergence checks. If there is a large voltage in the circuit this can artificially relax convergence checks for other signals. This option creates voltage bins so that large voltages do not impact nodes with small voltage swings.
Possible values are `no` and `yes`.

398 `optimize_bsource=no`
Enable the optimization in bsource evaluation. Default value is res in plus plus aps and no in others.
Possible values are `no`, `yes`, `res`, `cap`, `nores` and `nocap`.

399 `optimize_diode=no`
Enable the optimization in diode evaluation.
Possible values are `no` and `yes`.

400 `opt_diode_enhance=no`

401 `optimize_bsimcmg=no`
Enable the optimization in bsimcmg evaluation.
Possible values are `no` and `yes`.

402 `mdlthresholds=exact`
When set to exact, certain functions in MDL, for example, cross(), control the transient time-step to place a time-point at a threshold crossing. This can improve accuracy. However for applications such as cell characterization an interpolated value can give the required accuracy with better performance.
Possible values are `exact` and `interpolated`.

403 `dio_allow_scaling=no`
Use this flag to enable SCALE parameter for diode mode.
Possible values are `no` and `yes`.

Stitching parameters

404 `spf` This option specifies the DSPF file to be stitched and its stitching scope. The syntax is spf="scope filename". The scope can be a subcircuit or an instance. Use "spectre -h stitch" for more information.

© 2003-2020 All Rights Reserved.

405	`dpf`	This option specifies DPF file to be stitched and its stitching scope. The syntax is dpf="scope filename". The scope can be a subcircuit or an instance. Use "spectre -h stitch" for more information.
406	`spef`	This option specifies the SPEF file to be stitched and its stitching scope. The syntax is spef="scope filename". The scope can be a subcircuit or an instance. Use "spectre -h stitch" for more information.
407	`spfscale=1.0`	This option specifies the scaling factor of all the elements in the parasitic files (DSPF/SPEF/DPF). Use "spectre -h stitch" for more details.
408	`spfscaler=1`	This option specifies the scale factor for parasitic resistors.
409	`spfscalec=1`	This option specifies the scale factor for parasitic capacitors.
410	`spfinstancesection=1`	This option controls the backannotation of device parameters in the instance section of the DSPF file. If spfinstancesection is turned off, the instance section is ignored (that is, the device parameters are not changed during stitching). The default is on. Use "spectre -h stitch" for more information.
411	`spfxtorprefix`	This option specifies the prefix in the device or net names in the DSPF/SPEF/DPF file. The syntax is spfxtorprefix="substring [replace_substring]". Use "spectre -h stitch" for more information.
412	`speftriplet=2`	This option specifies the value to be used for stitching in the SPEF file. It is effective only when the values in the SPEF file are represented by triplets (for example, 0.325:0.41:0.495). Possible values are `1`, `2`, and `3`.

© 2003-2020 All Rights Reserved.

413	`spfbusdelim`	This option maps the bus delimiter between schematic netlist and parasitic file (i.e. DSPF, SPEF, or DPF). The option defines the bus delimiter in the schematic netlist, and optionally the bus delimiter in the parasitic file. By default the bus delimiter of the parasitic file is taken from the parasitic file header (that is, *|BUSBIT [], *|BUS_BIT [], or *|BUS_DELIMITER []). If the bus delimiter is not defined in the parasitic file header, you need specify it using the spfbusdelim option in schematic netlist. For example, the option spfbusdelim="<>" is maps A<1> in the schematic netlist to A_1 in the DSPF file, if the bus delimiter header in the DSPF file is "_". The option spfbusdelim="@ []" maps A@1 in the schematic netlist to A[1] in the DSPF file (the bus delimiter in DSPF header will be ignored). See "spectre -h stitch" for more information.
414	`spfinstarraydelim`	This option specifies the supplemental bus delimiter, if more than one bus delimiter is used in pre-layout netlist (usually for instance array indexing). It is similar to the spfbusdelim option. Use "spectre -h stitch" for more information.
415	`spfpost-param=replace`	This option specifies the instance parameters sourced for stitched instances. When set to replace, only the post-layout parameters are used and the pre-layout parameters are discarded. When set to append, both pre-layout and post-layout parameters are merged for the stitched instances where the post-layout parameters have higher priority. Possible values are `append` and `replace`.
416	`spfswapterm`	This option specifies the swappable terminals of a subcircuit macro-model. The syntax is spfswapterm="terminal1 terminal2 subcktname". Use "spectre -h stitch" for more information.

© 2003-2020 All Rights Reserved.

417	`spfaliasterm`	At times, the terminal names of devices in DSPF/SPEF/DPF files are different from those in the simulation model library. This happens in technology nodes that use subcircuits to model devices. The syntax is `spfaliasterm="<model|subckt> <prelayout_term0>=<spf_alias1> <prelayout_term2>=<spf_alias2> ... <prelayout_termN>=<spf_aliasN>"`. Multiple statements are supported. Use "spectre -h stitch" for more information.
418	`spfcnet`	This option specifies the net that has its total capacitance stitched. All other parasitic components such as parasitic resistors that are associated with this net are ignored. The complete hierarchical names are required and multiple statements are supported. Wildcards are supported. Use "spectre -h stitch" for more information.
419	`spfrcnet`	This option specifies the name of the net to be stitched with parasitic resistors and capacitors. The other nets are stitched with lumped total capacitances. Multiple statements are supported. Wildcards are supported and you can specify as many nets as needed. Complete hierarchical net names are required. Use "spectre -h stitch" for more information.
420	`spfnetcmin=0`	This option allows you to select the net for stitching by the value of its total node capacitance. If a net's total node capacitance exceeds spfnetcmin, all parasitics associated with the net are stitched correctly, otherwise, only the total capacitance is added to the net node. Use "spectre -h stitch" for more information.
421	`spfskipnetfile`	This option allows you to specify the nets to be skipped as a list in a text file. The syntax is spfskipnetfile="filename". Only one file can be specified. The format in the file is one line per net. Use "spectre -h stitch" for more information.
422	`spfmsglimit`	This option specifies the maximum number of messages to be printed in the spfrpt file. The syntax is spfmsglimit="number STITCH-ID_1 STITCH-ID_2". Use "spectre -h stitch" for more details.

© 2003-2020 All Rights Reserved.

423	`spfskipnet`	This option specifies the net to be skipped for stitching, that is, all parasitic components of the net are not stitched. Wildcards are supported. You can specify multiple spfskipnet statements. Use "spectre -h stitch" for more information.
424	`spfcnetfile`	This option has the same functionality as spfcnet, except that it accepts a text file in which all the C-only stitched nets are listed. Only one file can be specified. The syntax is spfcnetfile="filename". The format of the file requires you to specify one line per net. Use "spectre -h stitch" for more information.
425	`spfrcnetfile`	This option has the same functionality as spfrcnet, except that it accepts a text file in which all the RC stitched nets are specified. Only one file can be specified. The syntax is spfrcnetfile="filename". The format of the file requires you to specify one line per net. Use "spectre -h stitch" for more details.
426	`spfshortpin="1"`	Short pin nodes if set to yes or 1.
427	`spf_probe_mode=1`	Option to control probe name for spf node. If 0, flattened node name in format <net_name>#<flatten_nodename>, if 1, hierarchical node name following the net. Possible values are `0` and `1`.
428	`spfskipinst`	This option specifies the instance to be skipped for stitching, that is, the parameters of this instance are not stitched. Wildcards are supported. You can specify multiple `spfskipinst` statements. Use "`spectre -h stitch`" for more information.
429	`portmismatch_severity=error`	If set ignore/warn/error out when ports number mismatch for subckt. Possible values are `error`, `ignore`, and `warning`.
430	`implicit_subckt_param=no`	Allows the implicit parameter to be declared for the spectre format. Possible values are `no` and `yes`.

© 2003-2020 All Rights Reserved.

431	`mdltrigtarg-mode=cross`	This option specifies how to evaluate the trig and targ of the HSpice and the output format. If `mdltrigtargmode = deltax`, use the `deltax` function to evaluate the trig and targ functions. If `mdltrigtargmode = cross`, use the `cross` function to evaluate the trig and targ functions. If `mdltrigtargmode = details`, output the trig and targ middle results. Possible values are `deltax`, `cross`, and `details`.
432	`leaki_times=[...]`	Specifies input-steady state time points.
433	`macro_mos=[...]`	The list of subcircuit names, which is a macro model.
434	`skip_macro_-mos[...]`	List of subcircuit names, which is skipped to be a macro model.
435	`hier_delimiter="."`	Used to set hierarchical delimiter. Length of hier_delimiter should not be longer than 1, except the leader escape character.
436	`missing_icnodeset`	Write the node which is not in the ic or nodeset to the file.
437	`hier_ambigu-ity=strict`	The default value is strict. When set to lower, the simulator will partially flatten the hier name from the back to check if an object can be found. Lower is not recommended. Possible values are `strict` and `lower`.
438	`skip=none`	Skip the simulating specified subckt instances. For now, cut is supported, which will leave the subckt ports disconnected. Possible values are `none`, `load`, and `cut`.
439	`podeautovdd=0`	When set to `1`, finds the max vdd of each pode automatically.
440	`rcnet_save=all`	Flag to enable filter internal RC nodes for probe/save statement. Possible values are `all` and `portonly`.
441	`mc_scalar-file_stat=default`	Determines how scalarfile statistics data was printed. Default value is default. Possible values are `default` and `transposed`.
442	`mc_stat_list=defau lt`	Determines how many scalarfile statistics function was printed. Default value is default. Possible values are `default` and `all`.
443	`measureterm=pass`	If set to error, error out if two measures refer to the same node. Possible values are `pass` and `error`.

© 2003-2020 All Rights Reserved.

444	`devropt=none`	If set to `all`, diode, or mosfet, connected resistors will be folded to related instances. Possible values are `none`, `all`, `diode`, and `mosfet`.
445	`preservenode=none`	If set to `all`, node in save statement will be preserved. Possible values are `none`, `all`, and `explicit`.
446	`probedepth-count=hierarchy`	Hierarchy count the instance level, delimiter counts the delimiter level. Possible values are `hierarchy` and `delimiter`.
447	`subckt_switch=full`	If set to `simple`, complex subckt will be mapped to simple subckt in `mapsubckt`. Possible values are `full` and `simple`.
448	`duplicate_module=error`	Specifies whether the duplicate module definitions are allowed. When set to warning or ignore, the simulator allows duplicate module definitions. However, it honors only the last module definition. Depending on the value that is set, the simulator decides whether to display warning messages for the duplicate module definitions or not. When set to error, the simulator does not allow the duplicate module definitions and displays an error message. Possible values are `error`, `ignore`, and `warning`.
449	`ms_vpn`	The virtual power node names, globally.
450	`ms_vpnv=0 V`	The voltage value for the virtual power network sources in scope.
451	`ms_vgnd`	The virtual ground node names, globally.
452	`ms_vgndv=0 V`	The voltage value for the virtual power network grounds in scope.
453	`mtlinereuse=yes`	This parameter defines whether to reuse RLGC data for all mtline instances. If no, this feature is disabled. Possible values are `no` and `yes`.
454	`mtlinecachedir`	The directory in which the mtline RLGC data file will be written. If an absolute path is not given, the file will be written to /home/<username>/.cadence/mmsim/.
455	`mtlineemsolver=cpl`	EM 2D solver for transmission line. Possible values are `lmg` and `cpl`.

© 2003-2020 All Rights Reserved.

456	`disable_save_preserve=no`	Disables preserve by save statements. If no, does not disable the save preserve. If yes, disables the save preserve. Possible values are `no` and `yes`.
457	`mdlanalysisnames=rename`	Flag to indicate whether or not to keep the Spectre analysis name in MDL flow. Possible values are `rename` and `original`.
458	`check_format=xml`	Determines the format of the checker violation report. Possible values are `xml`, `text`, and `sql`.
459	`mismatchlevel=0`	By default, mismatch parameter is defined based on parameter scope concept: mismatch parameter can only have one value in one scope. For example, if a mismatch parameter appears multiple times in a subcircuit of the netlist, that mismatch parameter has a unique value in that subcircuit for each Monte Carlo run. With `mismatchlevel=1`, the mismatch parameter is allowed to have a different value for each appearance in the same scope. Possible values are `0` and `1`.
460	`local_meas=no`	Specify whether local measurements definitions are allowed. When set to ignore, the simulator allows local measurements definitions. Depending on the value that is set, the simulator displays warning messages for the local measurements definitions or does not display any message. When set to warning, the simulator does not allow and ignores the local measurement definitions with a warning message. Possible values are `no` and `yes`.
461	`uwiprecision=double`	Specify the uwi raw file precision. Possible values are `double` and `float`.
462	`ms_part_report=0`	Depth of the ms partition report, default is 0, which means that the report is not generated.
463	`tmi_fast_core_data=0`	Speed up TMI SOA/Age performance by fast TMI core data evaluation.
464	`thermalmap="%C:r.raw"`	Output the name of the raw data file.

© 2003-2020 All Rights Reserved.

465	`ose_random_mod=0`	Use OSE Random Method. Possible values are 0 and 1.
466	`etmiIdsMod=0`	Switch to select Ids or total DC drain current for TMI core data ids.
467	`osc_output_port`	Output raw data file name.
468	`passfail_reverse_logic=no`	Pass fail bisection treats NaN as PASS, and non-NaN value as FAIL. Possible values are `no` and `yes`.
469	`ms_vpni_start=0.0`	MS mode start time to get accurate currents.VPN current feedback is enabled after this time.
470	`ms_vpni_stop=0.0`	MS mode stop time to get accurate currents.VPN current feedback is disabled after this time.
471	`diagnose_dump_top-num=5`	Top number to dump single device netlist.
472	`ignorevaref=no`	Flag to exclude va nodes from quantity calculation. Option is set to `yes` when highvoltage=yes. Possible values are `no` and `yes`.
473	`ignoredgref=yes`	Flag to exclude dangling nodes from quantity calculation. Option is set to yes when highvoltage=yes. Possible values are `no` and `yes`.
474	`minr_mfactor=scaled`	Whether `minr` should be scaled. Possible values are `scaled` and `ignore`.
475	`print_section=no`	If yes, output sections used in simulations. If no, do not output sections. Possible values are `no` and `yes`.
476	`rmdgccs=no`	If yes, dangling controlled current source will be removed. Default value is no. Possible values are `no` and `yes`.
477	`sortinstance=no`	Sort devices of the netlist. Possible values are `no` and `yes`.
478	`checktoppinconn=no`	Check if the top level subckts have dangling terminals. Possible values are `no`, `warning` and `error`.
479	`hsfe=no`	If yes, the same as +hsfe in command line. Possible values are `no` and `yes`.

© 2003-2020 All Rights Reserved.

480	`macrocommand=no`	If yes, the same as +mac in command line. Possible values are `no` and `yes`.
481	`keeprc_conn_termcur=yes`	If yes, it functions as the SFE_KEEPRC_CONN_TERMCUR environment variable is set. Possible values are `no` and `yes`.
482	`lkmatrix=yes`	When enabled, converts inductors and mutual inductors to single instance of rlck_matrix. Possible values are `no` and `yes`.
483	`detect_path_acc=1`	Select a speed method for detecting critical path. Possible values are `1` and `2`.
484	`mtm_primitive=[...]`	Specify the primitive names which can be worked with +mac.
485	`inlinesubcktop=device`	Specifies whether inline subcircuit operating point should be saved as inline device operating point or subcircuit operating point. Default is device. Possible values are `device` and `subckt`.
486	`bjt504ver=504.12`	mextram504 avalanche noise version control.
487	`mosrcratio=2.0`	Set postlayout if #rc/#mos > mosrcratio.
488	`check_ahdl_mode=1`	This option specifies how to handle AHDL in dyn_dcpath, dyn_floatdcpath, dyn_float_tran_stat. When set to 1, all AHDL are considered conducting. When set to 2, only elastic branches are considered conducting.Possible values are `1` and `2`.
489	`spfr2iprobe=0`	Value for resistors to be replaced by iprobe.
490	`maxwildcardicreport=0`	

© 2003-2020 All Rights Reserved.

		Limit the number of wildcard ic/nodeset report to log file.
491	`bsimcmg_bug_fix=0`	Control bsimcmg fix, 1 for only disable dits fix.
492	`vlog_search_parameter=yes`	Search parameter in parent for vlog case, the default value is yes. Possible values are `no` and `yes`.
493	`hbtmodel=hbt`	Specify to use ucsd_hbt or hbt. Possible values are `hbt` and `ucsd_hbt`.
494	`variation_overwrite=no`	Support define variation with same name in a block and overwrite previous one. Possible values are `no` and `yes`.
495	`meastype=no`	If set to yes, allow interdependent from/to for trig and targ. Possible values are `no` and `yes`.

Important considerations for `currents` *and* `useprobes` *options*

- Adding probes to circuits that are sensitive to numerical noise might affect the solution. In such cases, accurate solution may be obtained by reducing the value of `reltol`.
- The following devices always use probes to save currents (even with `useprobes=no`): port, delay, switch, hbt, transformer, core, winding, fourier, d2a, a2d, a2ao, and a2ai.

senstype parameter

When `senstype` is set to `partial`, the sensitivity being calculated is the partial derivative of a differentiable output variable `F` with respect to a design parameter `p`:

$$D(F \text{ w.r.t. } p) = \frac{dF}{dp}$$

This definition is not scale free. When `senstype` is set to `normalized`, the sensitivity being calculated is the normalized sensitivity:

$$\frac{d \ln F}{d \ln p} = \frac{p}{F}\frac{dF}{dp}$$

© 2003-2020 All Rights Reserved.

```
S (F w.r.t. p) = ------ = - -- = - D (F w.r.t. p)
                 d ln p   F dp   F
```

When either `F` or `p` take a zero value, the above normalized definition no longer provides a useful measure. In this case, the following two semi-normalized sensitivities are used:

```
dF       dF
S (F w.r.t. p) = ------ = p -- = p D (F w.r.t. p)    if F = 0
                 d ln p     dp
```

And:

```
                 d ln F   1 dF   1
S (F w.r.t. p) = ------ = - -- = - D (F w.r.t. p)    if p = 0
                   dp     F dp   F
```

When both `F` and `p` are zero, partial sensitivity is used.

topcheck parameter

- When `topcheck=full`, the topology check is performed and `gmin` is inserted between isolated nodes and ground. A heuristic topology check is also performed to find nodes that may be isolated due to the numerical nature of the circuit. For example, nodes isolated by reverse biased diodes in MOSFETS.
- Use `topcheck=fixall` to attach `gmin` to all types of isolated nodes, including the ones detected by the heuristic topology check.
- When `topcheck=min`, the topology check is performed and `gmin` is inserted between isolated nodes and ground. A heuristic topology check is not performed.
- When `topcheck=no`, the topology check is not performed.
- `topcheck=errmin` (`topcheck=errfull`) is similar to `topcheck=min` (`topcheck=full`) but the simulation will stop if floating nodes are found.

Important considerations for using multithreading

- Multithreading is only available for devices evaluation for BSIM3v3 and BSIM4. Multithreading does not work with table model. If there is an instance of a primitive using table model, multithreading is not applied to all instances of that primitive.
- Multithreading can be turned on/off using the command-line option, environment variable `SPECTRE_DEFAULTS` setting, or by using the `multithread` parameter in the options statement from the input file. The command-line option takes priority over the `SPECTRE_DEFAULTS` environment variable setting. In addition, the latter takes priority over the setting in the netlist options statement.

© 2003-2020 All Rights Reserved.

- Using multithreading on circuits that are sensitive to numerical noise might affect the solution. The solution should still be within acceptable tolerance specified by the tolerance parameters in the Spectre input file. Because the order of evaluation of devices is different for each multithreading run of the same simulation, this could lead to different round off error in the computation. It is possible that the same result may not be reproducible when multithreading is used.
- Multithreading works best when the following capabilities are not used: `useprobes=yes`, save-current/SOA/alarm for multithreaded devices.
- When using device multithreading on a hyperthreading enabled system:
  - allows one thread for each physical processor.
  - Because the device evaluation is almost exclusively floating point computation and each physical processor still has one floating point unit, each can handle one device evaluation at a time. Allowing additional thread(s) for device evaluation on the same physical processor will not have any benefit.
  - On a multi-processor system with hyperthreading enabled, device multithreading would allow an extra thread for each additional physical processor. Multithreading performance not only depends on the simulator but also on how well the operating system manages multiple threads and multiple processes.

gmethod parameter

- The parameter controls how conductance is stamped in the homotopy methods (other than `dptran`).
- If `gmethod=gnode` the conductance is added from node to ground. In case of `gmethod=dev` the conductance is stamped in the devices.

dptran_gmethod parameter

This parameter controls how conductance is stamped in the `dptran` (homotopy) method. See `gmethod` for more information on how this option affects circuits.

auto_minductor parameter

When this parameter is set to `yes`, the simulator automatically calculates the missing second-order coupling by multiplying the two first-order coefficients. This calculation is only an estimation and may not be correct for many geometries.

For example, consider two mutual inductors `K1` and `K2`:

© 2003-2020 All Rights Reserved.

```
K1 mutual_inductor coupling=.65 ind1=L1 ind2=L2
K2 mutual_inductor coupling=.65 ind1=L2 ind2=L3
```

In this example, Spectre automatically inserts the coupling between `L1` and `L3`,if missing, and the coupling co-efficient is `0.65*0.65=0.4225`.

This option can be applied locally to a subckt by defining it inside a subckt definition or by using it with a subckt or inst scope:

```
subckt chip1 ( in out )
  scopedOptions options tnom=27 scale=0.1
  .......
ends chip1
subckt chip2 ( in out )
  scopedOptions options tnom=25 scale=0.2
  .......
ends chip2
o1 options scale=1.2 subckt=chip1
o2 options scale=1.5 subckt=chip2
o3 options scale=1.2 inst=pll
o4 options scale=1.5 inst=receiver
```

Parameter Index

In the following index, the number corresponding to each parameter name indicates where to find the description of that parameter.

BHT_New_Eval 231
ahdl_device_limit 58
ahdl_exp_limit 173
ahdl_maxdeltav 59
ahdldomainerror 30
gshunt 151
gshuntdc 152
hb_lowmem_default_mode 125
hbtmodel 493
hier_ambiguity 437
paramrangefile 239
parasitics 233
passfail_reverse_logic 468
pivabs 207
pivotdc 197
spfcnet 418
spfcnetfile 424
spfinstancesection 410
spfinstarraydelim 414
spfmsglimit 422

© 2003-2020 All Rights Reserved.

annotateonalter 377
approx 111
asserts_silent_init 139
audit 177
auto_minductor 112
automaxdeltav 50
automaxdeltavscale 51
autostop 253
bin_relref 397
bjt504ver 486
bsimcmg_bug_fix 491
cclamp 97
ccut 98
cgnd 99
chargeabstol 5
check_ahdl_mode 488
hier_delimiter 435
hierprobe 384
highvoltage 244
homotopy 43
hsfe 479
iabstol 4
iccap 130
iccheck 129
icpriority 80
icversion 65
idovvdsclamp 229
ignore_blowup 160
ignoredgref 473
ignorevaref 472
ignshorts 131
implicit_subckt_param 430
pivrel 206
podeautovdd 439
portmismatch_severity 429
precision 33
preorder 209
preserve_assert 227
preserve_inst 225
preserve_master 224
preserve_subckt 226
preservenode 445
print_including 376
print_section 475
printstep 380
probe_compatible 143
probedepthcount 446
procopt 42
spfnetcmin 420
spfpostparam 415
spfprobenode 23
spfr2iprobe 489
spfrcnet 419
spfrcnetfile 425
spfscale 407
spfscalec 409
spfscaler 408
spfshortpin 426
spfskipinst 428
spfskipnet 423
spfskipnetfile 421
spfswapterm 416
spfxtorprefix 411
sram_macro_model 259

© 2003-2020
All Rights Reserved.

check_format 458
info 181
psfversion 34
sram_macro_model_adjust_monotonic 261
checklimit_full_duration 142
inlinesubcktcurrent 381
ptranmaxsteps 70
sram_macro_model_adjust_monotonic_bits 296
checklimit_skip_file 202
inlinesubcktop 485
ptranmaxsteps1 72
sram_macro_model_adjust_monotonic_shift_vp 268
checklimit_skip_ie_connect_devices 205
inventory 178
pwl_ignore_error_msg 26
sram_macro_model_assert_active_wl 294
checklimit_skip_insts 203
ishrink 109
pwr 13
sram_macro_model_bbm 307
checklimit_skip_insts_file 204
ivth_vdsmin 395
qcut 104
sram_macro_model_bbm_ignore_non_converge 292
checklimit_skip_subs 201
ivthl 394
quantities 176
sram_macro_model_bbm_solve 288
checklimitdest 140
ivthn 391
rabsclamp 93
sram_macro_model_bbm_solve_dc 290
checklimitdetails 141
ivthp 392
rabsshort 92
sram_macro_model_bucket_count 295
checklimitfile 137
ivthw 393
rampsource 144
sram_macro_model_bypass 275
checktoppinconn 478
kcut 101
rawfile 32
sram_macro_model_compensate_bulk_current 308
ckptclock 212
keeprc_conn_termcur 481
rawfmt 31
sram_macro_model_convert_mtm_to_cmi 278
cmax 100
kmax 113
rclamp_bsource 172
sram_macro_model_debug_end_time 304

© 2003-2020
All Rights Reserved.

cmi_opts 232
cols 193
colslog 194
compatible 110
complexpivrel 208
cscalefactor 242
cthresh 243
currents 11
dc_auto_rforce 159
dc_check_multiple_solutions 164
dc_diagnose_elements 69
dc_diagnose_time 68
dc_ic_abstol 161
large_newton_reject 254
leaki_times 432
limit 47
limit_diag_pivot 210
lkmatrix 482
local_meas 460
lshort 102
macro_mode 246
macro_mos 433
macrocommand 480
max_approach_minstep 250
max_consecutive_minstep 251
max_minstep_nonconv 249
rcnet_save 440
rcr_cgnd 354
rcr_fmax 352
rcr_net_active_bit_line_conly 337
rcr_net_active_sa_to_gnd_conly 348
rcr_net_active_state_conly 339
rcr_net_active_word_line_conly 335
rcr_net_cgnd 355
rcr_net_dump_protect 350
rcr_net_floating1_conly 343
rcr_net_floating2_conly 344
rcr_net_floating3_conly 345
rcr_net_ground_conly 346
sram_macro_model_debug_level 305
sram_macro_model_debug_ms_level 297
sram_macro_model_debug_start_time 303
sram_macro_model_disable_bypass_stampa 282
sram_macro_model_diverge_at_large_wl 260
sram_macro_model_dynamic_switch 283
sram_macro_model_eliminate_osc 266
sram_macro_model_eliminate_osc_thr 267
sram_macro_model_enable_active_cell 285
sram_macro_model_enable_cplcap_min 291
sram_macro_model_fast_out 287
sram_macro_model_fix_state_in_dc 265
sram_macro_model_group_cells 274

© 2003-2020
All Rights Reserved.

dc_ic_reltol 162
maxdeltav 49
rcr_net_ground_reg_conly 347
sram_macro_model_group_max_size 272
dc_pivot_check 198
maxnotes 183
rcr_net_idle_bit_line_conly 338
sram_macro_model_iter_ratio 269
dc_solution_iabstol 167
maxnotestologfile 188
rcr_net_idle_reg_conly 340
sram_macro_model_keep_tbl_coeff 262
dc_solution_ireltol 168
maxphysicalflux 56
rcr_net_idle_sa_to_gnd_conly 349
sram_macro_model_level 306
dc_solution_vabstol 165
maxphysicali 54
rcr_net_idle_state_conly 341
sram_macro_model_limiting 270
dc_solution_vreltol 166
maxphysicalmmf 55
rcr_net_idle_word_line_conly 336
sram_macro_model_max_ratio 301
dccheck 163
maxphysicalunitless 57
rcr_net_merge_pn_idle_state_ports 334
sram_macro_model_merge_port_cap 280
dcdampsol 154
maxphysicalv 53
rcr_net_node_auto_res_bump 311
sram_macro_model_min_ratio 300
dcfloatnodecheck 155
maxvdddc 52
rcr_net_node_fmax 312
sram_macro_model_node_folding 279
dcmatch_fitting 358
maxwarns 186
rcr_net_option_file 351
sram_macro_model_power_down_table 289
dcmatchscaling 357
maxwarnstologfile 187
rcr_net_preserve_active_bit_line_ports 318
sram_macro_model_quantity 299
dcmaxiters 66
maxwildcardicreport 490
rcr_net_preserve_active_clk_to_sgc_ports 327
sram_macro_model_reconn_st_cplcap_to_port 293
dcmmod 385
mc_scalarfile_stat 441
rcr_net_preserve_active_heavy_load_ports 329
sram_macro_model_reset_cell_group_prop_at_each_iter 263

© 2003-2020
All Rights Reserved.

dcoptautodptranst eps 76
dcoptautoptranste ps 75
dcoptfilter 157
dcoptfiltervtol 158
dcoptic 77
dcoptictype 78
dcoptmaxsteps 74
dcopttol 150
dcuseprevic 156
dcut 103
debug 180
debugstepdrop 135
mc_stat_list 442
mdlanalysisnames 457
mdlthresholds 402
mdltrigtargmode 431
measdgt 191
measdgt 495
measureterm 443
minr 240
minr_mfactor 474
minstepversion 248
mismatchlevel 459
missing_icnodeset 436
rcr_net_preserve_ active_reg_drain_ source 333
rcr_net_preserve_ active_sa_to_gnd_ ports 325
rcr_net_preserve_ active_state_port s 320
rcr_net_preserve_ active_word_line_ ports 316
rcr_net_preserve_ din_to_bitline_po rts 323
rcr_net_preserve_ drain_source_sign als 331
rcr_net_preserve_ ground_reg_ports 314
rcr_net_preserve_ idle_bit_line_por ts 319
rcr_net_preserve_ idle_clk_to_sgc_p orts 328
rcr_net_preserve_ idle_heavy_load_p orts 330
rcr_net_preserve_ idle_reg_drain_so urce 332
rcr_net_preserve_ idle_sa_to_gnd_po rts 326
sram_macro_model_ skip_node_set 284
sram_macro_model_ st0_method 273
sram_macro_model_ stamp_gmin 277
sram_macro_model_ stamp_rforce 276
sram_macro_model_ stampa 281
sram_macro_model_ stampa_non_newton 271
sram_macro_model_ tran_solve 286
sram_macro_model_ tstep 302
sram_macro_model_ use_table 298
sram_macro_model_ wl_dynamic_switch 264
src_allbrkpts 28
stackfet_dcmaxite rs 67

© 2003-2020
All Rights Reserved.

detect_path_acc 483
mosrcratio 487
rcr_net_preserve_idle_state_ports 321
stepdropsize 136

detect_path_clock 86
mosvar_noscale 356
rcr_net_preserve_idle_word_line_ports 317
stver_note 184

detect_path_vgnd 85
ms_part_report 462
rcr_net_preserve_pn_ports 313
subckt_switch 447

detect_path_vpn 84
ms_vgnd 451
rcr_net_preserve_san_ports 324
subcktcap 87

devcheck_stat 145
ms_vgndv 452
rcr_net_preserve_san_to_dout_ports 322
subcktiprobes 14

device_limit 48
ms_vpn 449
rcr_net_preserve_vpn_ports 315
subcktopfreq 88

devropt 444
ms_vpni_start 469
rcr_net_state_idle_vpn_conly 342
subcktoppoint 81

diagnose 132
ms_vpni_stop 470
rcr_net_vpn 309
subcktprobelvl 12

diagnose_dump_topnum 471
ms_vpnv 450
rcr_net_vpn_groups 310
temp 6

diagnose_end 134
mtlinecachedir 454
rcr_rshort 353
tempeffects 8

diagnose_start 133
mtlineemsolver 455
rcut 94
thermalmap 464

digits 190
mtlinereuse 453
rcut_bsource 95
title 195

dio_allow_scaling 403
mtm_primitive 484
rebuild_matrix 211
tmi_fast_core_data 463

disable_check_nf 27
multithread 89
redefinedparams 214
tmiage 371

disable_save_preserve 456
narrate 179
redundant_currents 29
tmiaging_remove_slash 361

© 2003-2020
All Rights Reserved.

discontinuity 252
nestlvl 10
reelaborateonalter 378
tmiflag 364
disk_check_autoresume 40
newton 44
reltol 1
tmiinput 372
disk_check_thresh 39
noiseoff_inst 127
residualtol 2
tmipath 363
dochecklimit 138
noiseoff_type 46
reusedc 79
tmisave 373
dotprobefmt 383
noiseon_inst 126
rforce 171
tmisort 375
dpf 405
noiseon_type 45
rmdg_preserve 219
tnom 7
dptran_gmethod 61
nonconv_topnum 382
rmdgccs 476
topcheck 128
dptranmaxsteps 71
notation 192
rthresh 96
tran_pivot_check 199
dptranmaxsteps1 73
note 182
save 9
tran_pivot_threshold 200
dspf_nodename 24
nport_bbspice_to_linear 114
save_time_window 20
try_fast_op 64
dump_global_options 360
nport_default_interp 115
saveahdlvars 22
use_veriloga 221
duplicate_module 448
nport_default_passivity 116
savefilter 18
usenodes 17
duplicate_subckt 216
nportbbsfittedfiledir 117
saveports 19
useprobes 15
duplicateinstance 217
nportbbsmaxwaittime 124
scale 107
useterms 16
duplicatemodel 218
nportcompress 120
scale_redefined 379
uwifmt 35
duplicateports 215
nportcompressfiledir 123
scalefactor 108
uwilib 36

© 2003-2020
All Rights Reserved.

error 189
etmiIdsMod 466
etmiprntfd 359
etmiusrinput 374
exportfile 37
fastmcmethod 83
filter_wildcard_colon_ic 257
filter_wildcard_terminal_ic 258
fix_singular_matrix 170
flow 175
forcemt 90
gennetlistdir 41
gform_vcr 396
gmethod 60
gmin 147
gmin_check 169
nportirfiledir 119
nportirreuse 118
nportunusedportgmin 121
nportunusedportrmin 122
nthreads 91
omiage 367
omiflag 366
omiinput 369
omipath 365
omisave 368
omisort 370
opptcheck 146
opt_diode_enhance 400
optimize_bsimcmg 401
optimize_bsource 398
optimize_diode 399
scalem 106
sensbinparam 238
sensfile 234
sensfileonly 237
sensformat 235
senstype 236
short_bjtr 241
simstat 196
sine_sync_period 25
skip 438
skip_macro_mos 434
soa_dest 230
soa_warn 228
soft_bin 255
sortinstance 477
spef 406
uwiprecision 461
vabsshort 105
vabstol 3
value 174
variation_overwrite 494
vdsat_c 388
vdsat_vadj 390
vdsat_vdl 389
vdsatmod 387
verilogalang 247
vlog_search_parameter 492
vrefgnd 245
vthmod 386
warn 185
warning_change_severity 222
warning_id 223

© 2003-2020
All Rights Reserved.

gmin_converge 63
gmin_start 62
gmindc 148
gmindcmax 153
gminfloat 149
osc_output_port 467
ose_random_mod 465
out_dev_stack 82
output_compact_mapping 362
param_topchange 213
speftriplet 412
spf 404
spf_probe_mode 427
spfaliasterm 417
spfbusdelim 413
warning_limit 220
wfdebug 21
wfmaxsize 38
xpssdc_disable_output 256

© 2003-2020
All Rights Reserved.

Periodic AC Analysis (pac)

Description

The periodic AC (PAC) analysis is used to compute transfer functions for circuits that exhibit frequency translation. Such circuits include mixers, switched-capacitor filters, samplers, phase-locked loops, and the like. PAC is a small-signal analysis similar to AC analysis, except that the circuit is first linearized about a periodically varying operating point as opposed to a simple DC operating point. Linearizing about a periodically time-varying operating point allows transfer-functions that include frequency translation, which is not the case when linearizing about a DC operating point because linear time-invariant circuits do not exhibit frequency translation. In addition, the frequency of the sinusoidal stimulus is not constrained by the period of the large periodic solution.

Computing the small-signal response of a periodically varying circuit is a two-step process. First, the small stimulus is ignored and the periodic steady-state response of the circuit to possibly large periodic stimulus is computed using PSS analysis. As part of the PSS analysis, the periodically time-varying representation of the circuit is computed and saved for later use. The second step is to apply the small stimulus to the periodically varying linear representation to compute the small signal response. This is done using the PAC analysis. A PAC analysis cannot be used alone, it must follow a PSS analysis. However, any number of periodic small-signal analyses such as PAC, PSP, PXF, and PNoise, can follow a PSS analysis.

Modulated small signal measurements are possible by using the Analog Design Environment (ADE). The `modulated` option for PAC and the other modulated parameters are set by Artist. PAC analyses with this option produces results that could have limited use outside such an environment. Direct Plot is configured to analyze these results and combine several wave forms to measure AM and PM response due to single sideband or modulated stimuli. For details, see the *Spectre RF User Guide*.

Unlike AC analysis, PAC analysis can print the time-domain simulation results by specifying the `outputperiod` parameter. In addition, unlike other analyses in Spectre, this analysis can only sweep frequency.

For information on how to run PAC analysis from ADE, see *Periodic AC Analysis (PAC)* in the *Spectre Circuit Simulator and Accelerated Parallel Simulator RF Analysis User Guide*.

Definition

```
Name ... pac parameter=value ...
```


© 2003-2020 All Rights Reserved.

Parameters

Sweep interval parameters

1	`start=0`	Start sweep limit.
2	`stop`	Stop sweep limit.
3	`center`	Center of sweep.
4	`span=0`	Sweep limit span.
5	`step`	Step size, linear sweep.
6	`lin=50`	Number of steps, linear sweep.
7	`dec`	Points per decade.
8	`log=50`	Number of steps, log sweep.
9	`values=[...]`	Array of sweep values.
10	`valuesfile`	Name of the file containing the sweep values.
11	`sweeptype=unspecified`	Specifies if the sweep frequency range is the absolute frequency of input or if it is relative to the port harmonics. When the unspecified value is used, Spectre RF sweeps using relative when autonomous simulation is performed or when the analysis is PSP; for other cases Spectre RF sweeps the absolute value of the input. Possible values are `absolute`, `relative` and `unspecified`.
12	`relharmnum=1`	Harmonic to which relative frequency sweep should be referenced.

Sampled analysis parameters

13	`ptvtype=timeaveraged`	Specifies whether the PTV analysis will be traditional or sampled under certain conditions. Possible values are `timeaveraged` and `sampled`.
14	`sampleprobe`	The crossing event at this port triggers the sampled small signal computation.

© 2003-2020 All Rights Reserved.

15	`thresholdvalue=0`	Sampled measurement is done when the signal crosses this value.
16	`crossingdirection=all`	Specifies the transitions for which sampling must be done. Possible values are `all`, `rise`, `fall`, and `ignore`.
17	`maxsamples=16`	Maximum number of sampled events to be processed during the sampled analysis.
18	`extrasampletimepoints=[...]`	Additional time points for sampled PTV analysis.

Output parameters

19	`sidebands=[...]`	Array of relevant sidebands for the analysis.
20	`maxsideband=7`	An alternative to the `sidebands` array specification, which automatically generates the array: [-maxsideband ... 0 ... +maxsideband]. For the shooting analysis, the default value is `7`. For HB small signal analysis, the default value is the `harms/maxharms` setting in the HB large signal analysis. It is ignored in HB small signal when it is larger than the `harms`/`maxharms` of large signal.
21	`freqaxis`	Specifies whether the results should be printed as per the input frequency, the output frequency, or the absolute value of the output frequency. Default is `absout`. Possible values are `absout`, `out`, and `in`.
22	`save`	Signals to output. Possible values are `all`, `lvl`, `allpub`, `lvlpub`, `selected`, `none`, and `nooutput`.
23	`nestlvl`	Levels of subcircuits to output.
24	`outputperiod=0.0 (no output)`	Time-domain output period. The time-domain small-signal response is computed for the period specified, rounded to the nearest integer multiple of the `pss` period.

© 2003-2020 All Rights Reserved.

Convergence parameters

25	`tolerance`	Tolerance for linear solver. The default value is `1.0e-9` for shooting-based solver and `1.0e-4` for harmonic balance-based solver.
26	`relativeTol`	Relative tolerance for harmonic balance-based linear solver. The default value is 1.0e-2.
27	`gear_order=2`	Gear order used for small-signal integration.
28	`solver=turbo`	Solver type. Possible values are `std`, `turbo`, `std_hh`, and `turbo_hh`.
29	`oscsolver=turbo`	Oscillator solver type. It is recommended to use `ira` for huge circuits. Possible values are `std`, `turbo`, `ira`, and `direct`.
30	`resgmrescycle=short`	Restarts GMRES cycle. Possible values are `instant`, `short`, `long`, `recycleinstant`, `recycleshort`, `custom`, and `recyclelong`.
31	`hbprecond_solver=autoset`	Select a linear solver for the GMRES preconditioner. Default is autoset. With autoset, the simulator will automatically select the appropriate preconditioner. The preconditioner affects the rate of convergence of the linear matrix solver used in periodic small-signal analysis. When autoset is selected, the simulator may decide to switch to a different preconditioner after the analysis begins. When that happens, the simulator may issue a warning instructing you to choose a different preconditioner during subsequent runs. Although not required, choosing a different preconditioner according to the simulator's instructions may speed up subsequent analyses. Possible values are `basicsolver`, `blocksolver`, `autoset`, `blockdense`, and `blocksolver2`.
32	`lowmem=0`	Harmonic balance low memory mode. Possible values are `0`, `1`, or number (>=10). The default value is `0`, it indicates that the low memory mode is turned off; if `1` is set, the standard low memory mode is turned on; If a number greater that or equal to `10` is set, Spectre interprets the value as memory requested in Gigabytes.

© 2003-2020 All Rights Reserved.

33	`krylov_size=200`	The maximum iteration count of the linear matrix solver used in periodic small-signal analysis. After reaching `1.25*krylov_size` iterations, the iteration is forced to terminate because of the poor rate of convergence. Increase krylov_size if the simulation reports insufficient norm reduction errors in GMRES.
34	`osc_version=dts`	Specifies the method to use in small signal analysis for autonomous circuit. Possible values are `floquet`, `augmented`, and `dts`.
35	`osc_accuracy=1`	Accuracy control in small signal analysis for autonomous circuit when `osc_version=dts`. The higher this value, the more iterations GMRES solver will take. Maximum effective value is 5.
36	`freqdivide=1`	Large signal frequency division. Used for oscillator circuit with divider when `osc_version=dts` for shooting engine.

Annotation parameters

37	`annotate=sweep`	Degree of annotation. Possible values are `no`, `title`, `sweep`, `status`, `steps`, and `detailed_hb`.
38	`title`	Analysis title.

Modulation conversion parameters

39	`modulated=no`	Compute transfer functions/conversion between modulated sources and outputs. Possible values are `single`, `first`, `second`, and `no`.
40	`inmodharmnum=1`	Harmonic value for the PAC input source modulation.
41	`outmodharmvec=[...]`	Harmonic list for the PAC output modulations.
42	`moduppersideband=1`	Index of the upper sideband included in the modulation of an output for PAC, or an input for PXF.
43	`modsource`	Refer the output noise to this component.

© 2003-2020 All Rights Reserved.

Rapid distortion analysis parameters

44	`perturbation=linear`	The type of PAC analysis. Default is `linear` for normal PAC analysis. `im2ds` stands for im2 distortion summary and `ds` stands for distortion summary. Possible values are `linear`, `ds`, `ip3`, `ip2`, `im2ds`, `multiple_beat`, and `triple_beat`.
45	`flin_out=0 Hz`	Frequency of linear output signal.
46	`fim_out=0 Hz`	Frequency of IM output signal.
47	`out1="NULL"`	Output signal 1.
48	`out2="NULL"`	Output signal 2.
49	`contriblist="NULL"`	Array of device names for distortion summary. When `contriblist[""]`, distortion from each non-linear device is calculated.
50	`maxharm_nonlin=4`	Maximum harmonics of input signal frequency induced by non-linear effect.
51	`rfmag=0`	RF source magnitude.
52	`rfdbm=0`	RF source dBm.
53	`rf1_src="NULL"`	Array of RF1 source names for IP3/IP2/IM2.
54	`rf2_src="NULL"`	Array of RF2 source names for IP3/IP2/IM2.
55	`rf_src="NULL"`	Array of RF source names for triple beat analysis. Triple beat is not supported in shooting engine, PSS must be run before PAC with `flexbalance=yes` or `harmonicbalance=yes`.
56	`freqs=NULL`	Array of RF source frequencies for triple beat analysis. Triple beat is not supported in shooting engine, PSS must be run before PAC with `flexbalance=yes` or `harmonicbalance=yes`.
57	`rfampls=NULL`	RF source amplitudes; the units are dBm for ports, Voltage for v-sources and Ampere for i-sources.

You can select the set of periodic small-signal output frequencies of interest by setting either the `maxsideband` or the `sidebands` parameters. For a given set of n integer numbers representing sidebands K1, K2, ... Kn, the output frequency at each sideband is computed

© 2003-2020 All Rights Reserved.

as `f(out)= f(in) + Ki * fund(pss)`, where `f(in)` represent the (possibly swept) input frequency, and `fund(pss)` represents the fundamental frequency used in the corresponding PSS analysis. Therefore, when analyzing a down-converting mixer, while sweeping the RF input frequency, the most relevant sideband for IF output is Ki= -1. When simulating an up-converting mixer, while sweeping IF input frequency, the most relevant sideband for RF output is Ki= 1. By setting the `maxsideband` value to Kmax, all `2 * Kmax + 1` sidebands from -Kmax to +Kmax are generated.

The number of requested sidebands does not change substantially the simulation time. However, the `maxacfreq` of the corresponding PSS analysis should be set to guarantee that | max{f(out)} | is less than `maxacfreq`; otherwise, the computed solution might be contaminated by aliasing effects. The PAC simulation is not executed for | f(in) | greater than `maxacfreq`. Diagnostic messages are printed for those extreme cases, indicating how `maxacfreq` should be set in the PSS analysis. In majority of the simulations, however, this is not an issue, because `maxacfreq` is never allowed to be smaller than 40x the PSS fundamental.

With PAC, the frequency of the stimulus and of the response are usually different (this is an important area in which PAC differs from AC). The `freqaxis` parameter is used to specify whether the results should be output versus the input frequency (`in`), the output frequency (`out`), or the absolute value of the output frequency (`absout`).

You can define sweep limits by specifying the end points or by providing the center value and span of the sweep. Steps can be linear or logarithmic, and you can specify the number of steps or the size of each step. In addition, you can specify a step size parameter (`step`, `lin`, `log`, or `dec`) to determine whether the sweep is linear or logarithmic. If you do not specify a step size parameter, the sweep is linear when the ratio of stop to start values is less than 10, and logarithmic when this ratio is 10 or greater. Alternatively, you may specify the particular values that the sweep parameter should take using the `values` parameter. If you specify both a specific set of values and a set specified using a sweep range, the two sets are merged and collated before being used. All frequencies are in Hertz.

Parameter Index

In the following index, the number corresponding to each parameter name indicates where to find the description of that parameter.

annotate 37
center 3
lin 6
log 8
outmodharmvec 41
outputperiod 24
sidebands 19
solver 28

© 2003-2020
All Rights Reserved.

contriblist 49
crossingdirection 16
dec 7
extrasampletimepoints 18
fim_out 46
flin_out 45
freqaxis 21
freqdivide 36
freqs 56
gear_order 27
hbprecond_solver 31
inmodharmnum 40
krylov_size 33
lowmem 32
maxharm_nonlin 50
maxsamples 17
maxsideband 20
modsource 43
modulated 39
moduppersideband 42
nestlvl 23
osc_accuracy 35
osc_version 34
oscsolver 29
out1 47
out2 48
perturbation 44
ptvtype 13
relativeTol 26
relharmnum 12
resgmrescycle 30
rf1_src 53
rf2_src 54
rf_src 55
rfampls 57
rfdbm 52
rfmag 51
sampleprobe 14
save 22
span 4
start 1
step 5
stop 2
sweeptype 11
thresholdvalue 15
title 38
tolerance 25
values 9
valuesfile 10

© 2003-2020 All Rights Reserved.

Periodic Noise Analysis (pnoise)

Description

The Periodic Noise, or PNoise analysis is similar to the conventional noise analysis, except that it includes frequency conversion effects. Hence, it is useful for predicting the noise behavior of mixers, switched-capacitor filters, and other periodically driven circuits. It is particularly useful for predicting the phase noise of autonomous circuits, such as oscillators.

PNoise analysis linearizes the circuit about the periodic operating point computed in the prerequisite PSS analysis. It is the periodically time-varying nature of the linearized circuit that accounts for the frequency conversion. In addition, the affect of a periodically time-varying bias point on the noise generated by the various components in the circuit is also included.

The time-average of the noise at the output of the circuit is computed in the form of spectral density versus frequency. The output of the circuit is specified with either a pair of nodes or a probe component. To specify the output of a circuit with a probe, specify it using the `oprobe` parameter. If the output is voltage (or potential), choose a `resistor` or a `port` as the output probe. If the output is current (or flow), choose a `vsource` or `iprobe` as the output probe.

If the input-referred noise or noise figure is desired, specify the input source by using the `iprobe` parameter. For input-referred noise, use vsource or isource as the input probe; for noise figure, use a port as the probe. Currently, only a `vsource`, an `isource`, or a `port` may be used as an input probe. If the input source is noisy, as is a `port`, the noise analysis computes the noise factor (F) and noise figure (NF). To match the IEEE definition of noise figure, the input probe must be a port with no excess noise and its `noisetemp` must be set to 16.85C (290K). In addition, the output load must be a `resistor` or `port` and must be identified as the `oprobe`.

If `port` is specified as the input probe, both input-referred noise and gain are referred back to the equivalent voltage source inside the port. S-parameter analysis calculates those values in traditional sense.

The reference sideband (`refsideband`) specifies which conversion gain is used when computing input-referred noise, noise factor, and noise figure. The reference sideband specifies the input frequency relative to the output frequency with:

```
|f(input)| = |f(out) + refsideband * fund(pss)|
```

Use `refsideband=0` when the input and output of the circuit are at the same frequency (such as with amplifiers and filters). When `refsideband` differs from 0, the single side-band noise figure is computed.

© 2003-2020 All Rights Reserved.

The noise analysis always computes the total noise at the output, which includes contributions from the input source and the output load. The amount of the output noise that is attributable to each noise source in the circuit is also computed and output individually. If the input source is identified (using iprobe) and is a vsource or isource, the input-referred noise is computed, which includes the noise from the input source itself. Finally, if the input source is identified (using iprobe) and is noisy, as is the case with ports, the noise factor and noise figure are computed. Therefore, if:

No = total output noise

Ns = noise at the output due to the input probe (the source)

Nsi = noise at the output due to the image harmonic at the source

Nso = noise at the output due to harmonics other than input at the source

Nl = noise at the output due to the output probe (the load)

IRN = input referred noise

G = gain of the circuit

F = noise factor

NF = noise figure

Fdsb = double sideband noise factor

NFdsb = double sideband noise figure

Fieee = IEEE single sideband noise factor

NFieee = IEEE single sideband noise figure

Then:

IRN = sqrt(No^2/G^2)

F = (No^2 - Nl^2)/Ns^2

NF = 10*log10(F)

Fdsb = (No^2 - Nl^2)/(Ns^2+Nsi^2)

NFdsb = 10*log10(Fdsb)

© 2003-2020 All Rights Reserved.

Fieee = (No^2 - Nl^2 - Nso^2)/Ns^2

NFieee = 10*log10(Fieee).

When the results are output, No is named `out`, IRN is named `in`, G is named `gain`, F, NF, Fdsb, NFdsb, Fieee, and NFieee are named `F`, `NF`, `Fdsb`, `NFdsb`, `Fieee`, and `NFieee`, respectively.

In a phase noise analysis for an oscillator, the line width, which is also known as the corner frequency, is defined as either the full width at half maximum (FWHM), or as twice the half power (-3dB) width (HW). In the absence of 1/f noise and ignoring any noise floor, the phase noise spectrum satisfies the Lorentzian equation:

```
L(f) = (1/pi) * [ pi * c * fosc^2 ] / [(pi * c * fosc^2)^2 + f^2],
```

Where, c is a constant that defines the phase noise characteristics of the oscillator, fosc is the fundamental frequency of the oscillator, and f is the offset frequency of the oscillator. Therefore:

```
line width := FWHM = 2* HW = 2 * pi * c * fosc^2.
```

Note: Unlike other analyses in Spectre, this analysis can only sweep frequency.

For information on how to run Pnoise analysis from ADE, see *Periodic Noise Analysis (Pnoise)* in the *Spectre Circuit Simulator and Accelerated Parallel Simulator RF Analysis User Guide*.

Definition

```
Name  [p]  [n] ... pnoise parameter=value ...
```

The optional terminals (p and n) specify the output of the circuit. If you do not specify the terminals, you must specify the output with a probe component.

Parameters

Sweep interval parameters

1	`start=0`	Start sweep limit.
2	`stop`	Stop sweep limit.

© 2003-2020 All Rights Reserved.

3	`center`	Center of sweep.
4	`span=0`	Sweep limit span.
5	`step`	Step size, linear sweep.
6	`lin=50`	Number of steps, linear sweep.
7	`dec`	Points per decade.
8	`log=50`	Number of steps, log sweep.
9	`values=[...]`	Array of sweep values.
10	`valuesfile`	Name of the file containing the sweep values.
11	`sweeptype=unspecified`	Specifies if the sweep frequency range is the absolute frequency of input or if it is relative to the port harmonics. When the unspecified value is used, Spectre RF sweeps using relative when autonomous simulation is performed or when the analysis is PSP; for other cases Spectre RF sweeps the absolute value of the input. Possible values are `absolute`, `relative`, and `unspecified`.
12	`relharmnum=1`	Harmonic to which relative frequency sweep should be referenced.

Probe parameters

13	`oprobe`	Compute total noise at the output defined by this component.
14	`iprobe`	Refer the output noise to this component.
15	`refsideband`	Conversion gain associated with this sideband; is used when computing input-referred noise or noise figure.

Sampled analysis parameters

16	`thresholdvalue=0`	Sampled measurement is done when the signal crosses this value.

© 2003-2020 All Rights Reserved.

17	`crossingdirection=all`	Specifies the transitions for which sampling must be done. Possible values are `all`, `rise`, `fall`, and `ignore`.
18	`maxsamples=16`	Maximum number of sampled events to be processed during the sampled analysis.
19	`sampleratio=1`	The ratio between sampled frequency and fund frequency (sampled frequency/fund frequency).
20	`externalsourcedata`	Name of PXF analysis that provides information to compute the contribution of external jitter sources.
21	`measurement=NULL`	Specifies the jitter event list that will be measured.

Output parameters

22	`noisetype=timeaverage`	Specifies the computation of time-averaged or time-sampled noise information. Possible values are `timeaverage`, `correlations`, `timedomain`, `pmjitter`, and `sampled`.
23	`maxsideband=7`	In shooting pnoise, the parameter determines the maximum sideband included when computing noise that is either up-converted or down-converted to the output by the periodic drive signal. In HB pnoise, the parameter determines the size of the small signal system when HB pnoise is performed. This parameter is critical for the accuracy of HB pnoise analysis; using a small maxsideband may cause accuracy loss.The default value for the shooting pnoise is 7. For HB pnoise, the default is the `harms/maxharms` setting in the HB large signal analysis.
24	`sidebands=[...]`	Array of relevant sidebands for the analysis.

© 2003-2020 All Rights Reserved.

25	`save`	Signals to output. This option specifies the signals to be saved in the result. Possible values are `all`, `lvl`, `allpub`, `lvlpub`, and `selected`. ■ `allpub`: saves all signals at all levels of hierarchy in the schematic, including the internal signals of device models. ■ `all`: works like `allpub`. ■ `lvl`: saves all signals through the level of hierarchy set in the `nestlvl` option. ■ `lvlpub`: works like `lvl`. ■ `selected`: is not recommended to be used here.
26	`nestlvl`	Levels of subcircuits to output.
27	`maxcycles`	Maximum cycle correlation frequency included when computing noise, that is either up-converted or down-converted to the output by the periodic drive signal.
28	`noiseskipcount=-1`	Calculate time-domain noise on only one of every noiseskipcount time points. When < 0, the parameter is ignored. When >=0, simulator uses this parameter and ignores numberofpoints.
29	`noisetimepoints=[...]`	Additional time points for time-domain noise analysis.
30	`numberofpoints=5`	Number of time points of interest in the period where time domain PSD is calculated. Simulator divides the period evenly into N segments (N=numberofpoints) and calculates time domain PSD on the starting time point of each segment. When < 0, the parameter is ignored.
31	`saveallsidebands=no`	Save noise contributors by sideband. Possible values are `no` and `yes`.
32	`separatenoise=no`	Separate noise into sources and transfer functions. Possible values are `no` and `yes`.
33	`cyclo2txtfile=no`	Output cyclo-stationary noise to text file as input source of next stage. Possible values are `no` and `yes`.

© 2003-2020 All Rights Reserved.

34	`noiseout=usb`	Specify the noise output. You can set a vector like `noiseout=[usb am pm]`. All of these use the single sideband (SSB) convention, which is half of the total power. Possible values are `usb`, `lsb`, `am`, and `pm`.

Convergence parameters

35	`tolerance`	Tolerance for the linear solver. The default value is 1.0e-9 for shooting-based solver, and 1.0e-04 for harmonic balance-based solver.
36	`relativeTol`	Relative tolerance for harmonic balance-based linear solver. The default value is 1.0e-2.
37	`gear_order=2`	Gear order used for small-signal integration.
38	`solver=turbo`	Solver type. Possible values are `std`, `turbo`, `std_hh`, and `turbo_hh`.
39	`oscsolver=turbo`	Oscillator solver type. It is recommended to use `ira` for huge circuits. Possible values are `std`, `turbo`, `ira`, and `direct`.
40	`resgmrescycle=short`	Restarts GMRES cycle. Possible values are `instant`, `short`, `long`, `recycleinstant`, `recycleshort`, `custom`, and `recyclelong`.
41	`hbprecond_solver=autoset`	Select a linear solver for the GMRES preconditioner. Default is autoset. With autoset, the simulator will automatically select the appropriate preconditioner. The preconditioner affects the rate of convergence of the linear matrix solver used in periodic small-signal analysis. When autoset is selected, the simulator may decide to switch to a different preconditioner after the analysis begins. When that happens, the simulator may issue a warning instructing you to choose a different preconditioner during subsequent runs. Although not required, choosing a different preconditioner according to the simulator's instructions may speed up subsequent analyses. Possible values are `basicsolver`, `blocksolver`, `autoset`, `blockdense`, and `blocksolver2`.

© 2003-2020 All Rights Reserved.

42	`lowmem=0`	Harmonic balance low memory mode. Possible values are `0`, `1`, or number (>=10). The default value is `0`, it indicates that the low memory mode is turned off; if `1` is set, the standard low memory mode is turned on; If a number greater that or equal to `10` is set, Spectre interprets the value as memory requested in Gigabytes.
43	`ppv=no`	If set to `yes`, save the oscillator PPV after performing noise analysis. Possible values are `no` and `yes`.
44	`ppvfile`	File to which the PPV of oscillator is written.
45	`augmented=yes`	If set to `yes`, the frequency-aware PPV method is used to calculate the total noise of the oscillator; if set to `pmonly`, only the PM part of the oscillator noise is calculated; if set to `amonly`, only the AM part of the oscillator noise is calculated. The output of AM/PM noise uses the double sideband convention. Possible values are `no`, `yes`, `pmonly`, and `amonly`. **Note:** This parameter will be removed in a future release. It is recommended that you use the `noiseout` parameter.
46	`lorentzian=cornerfreqonly`	This option determines if the Lorentzian plot is used in the oscillator noise analysis. Possible values are `no`, `cornerfreqonly`, and `yes`.
47	`pnoisemethod=default`	This option selects the shooting pnoise method. Possible values are `default` and `fullspectrum`.
48	`krylov_size=200`	The maximum iteration count of the linear matrix solver used in periodic small-signal analysis. After reaching `1.25*krylov_size` iterations, the iteration is forced to terminate because of the poor rate of convergence. Increase krylov_size if the simulation reports insufficient norm reduction errors in GMRES.
49	`osc_version=dts`	Specifies the method to use in small signal analysis for autonomous circuit. Possible values are `floquet`, `augmented`, and `dts`.
50	`osc_accuracy=2`	Accuracy control in small signal analysis for autonomous circuit when `osc_version=dts`. The higher this value, the more iterations GMRES solver will take. Maximum effective value is 5.

© 2003-2020 All Rights Reserved.

51	`freqdivide=1`	Large signal frequency division. Used for oscillator circuit with divider when `osc_version=dts` for shooting engine.

Annotation parameters

52	`annotate=sweep`	Degree of annotation. Possible values are `no`, `title`, `sweep`, `status`, `steps`, and `detailed_hb`.
53	`title`	Analysis title.

In practice, noise can mix with each of the harmonics of the periodic drive signal applied in the PSS analysis and end up at the output frequency. However, the PNoise analysis includes only the noise that mixes with a finite set of harmonics that are typically specified using the `maxsideband` parameter; however, in special circumstances, the harmonics may be specified with the `sidebands` parameter. If Ki represents sideband i, then:

```
f(noise_source) = f(out) + Ki * fund(pss)
```

The `maxsideband` parameter specifies the maximum |Ki| included in the PNoise calculation. Therefore, noise at frequencies less than f(out)-maxsideband*fund(pss) and greater than f(out)+maxsideband*fund(pss) are ignored. If selected sidebands are specified using the `sidebands` parameter, then only those specified are included in the calculation. When specifying the sidebands ensure that you include a sideband that contributes significant noise to the output; otherwise, the results will be erroneous.

The number of requested sidebands does not change the simulation time substantially. However, the `maxacfreq` of the corresponding PSS analysis should be set to guarantee that |max{f(noise_source)}| is less than `maxacfreq`; otherwise, the computed solution might be contaminated by aliasing effects. The PNoise simulation is not executed for |f(out)| greater than `maxacfreq`. Diagnostic messages are printed for those extreme cases, indicating which `maxacfreq` should be set in the PSS analysis. In majority of simulations, however, this is not an issue, because `maxacfreq` is never allowed to be smaller than 40x the PSS fundamental.

Phase Noise measurements are possible by using the Analog Design Environment (ADE) environment. Two pnoise analyses are pre-configured for this simulation and most of the parameters are set by ADE. The first pnoise analysis named `mod1` is a regular noise analysis and can be used independently. The second pnoise correlation analysis named `mod2` has limited use outside of the ADE environment. Direct Plot is configured to analyze these results and combine several wave forms to measure AM and PM components of the output noise. For details, see the Spectre RF User Guide.

© 2003-2020 All Rights Reserved.

You can define sweep limits by specifying the end points or by providing the center value and span of the sweep. Steps can be linear or logarithmic, and you can specify the number of steps or the size of each step. In addition, you can specify a step size parameter (`step`, `lin`, `log`, or `dec`) to determine whether the sweep is linear or logarithmic. If you do not specify a step size parameter, the sweep is linear when the ratio of stop to start values is less than 10, and logarithmic when this ratio is 10 or greater. Alternatively, you may specify the particular values that the sweep parameter should take using the `values` parameter. If you specify both a specific set of values and a set specified using a sweep range, the two sets are merged and collated before being used. All frequencies are in Hertz.

Parameter Index

In the following index, the number corresponding to each parameter name indicates where to find the description of that parameter.

annotate 52
augmented 45
center 3
crossingdirection 17
cyclo2txtfile 33
dec 7
externalsourcedata 20
freqdivide 51
gear_order 37
hbprecond_solver 41
iprobe 14
lorentzian 46
lowmem 42
maxcycles 27
maxsamples 18
maxsideband 23
measurement 21
nestlvl 26
noiseout 34
noiseskipcount 28
noisetimepoints 29
noisetype 22
osc_version 49
oscsolver 39
pnoisemethod 47
ppv 43
ppvfile 44
refsideband 15
relativeTol 36
relharmnum 12
resgmrescycle 40
sampleratio 19
save 25
solver 38
span 4
start 1
step 5
stop 2
sweeptype 11
thresholdvalue 16
title 53
tolerance 35
values 9
valuesfile 10

© 2003-2020 All Rights Reserved.

krylov_size 48	numberofpoints 30	saveallsidebands 31
lin 6	oprobe 13	separatenoise 32
log 8	osc_accuracy 50	sidebands 24

© 2003-2020 All Rights Reserved.

Periodic S-Parameter Analysis (psp)

Description

The periodic SP (PSP) analysis is used to compute scattering and noise parameters for n-port circuits that exhibit frequency translation, such as mixers. It is a small-signal analysis like SP analysis, except, as in PAC and PXF, the circuit is first linearized about a quasi-periodically varying operating point as opposed to a simple DC operating point. Linearizing about a periodically time-varying operating point allows the computation of S-parameters between circuit ports that convert signals from one frequency band to another. PSP can also calculate noise parameters in frequency-converting circuits. PSP computes noise figure (both single-sideband and double-sideband), input referred noise, equivalent noise parameters, and noise correlation matrices. Similar to PNoise, but unlike SP, the noise features of the PSP analysis include noise folding effects due to the periodically time-varying nature of the circuit.

Computing the n-port S-parameters and noise parameters of a periodically varying circuit is a two step process. First, the small stimulus is ignored and the periodic steady-state response of the circuit to possibly large periodic stimulus is computed using PSS analysis. As a part of the PSS analysis, the periodically time-varying representation of the circuit is computed and saved for later use. The second step is to apply small-signal excitations to compute the n-port S-parameters and noise parameters. This is done using PSP analysis. PSP analysis cannot be used independently, it must follow a PSS analysis. However, any number of periodic small-signal analyses such as PAC, PSP, PXF, PNoise, can follow a PSS analysis.

Note: Unlike other analyses in Spectre, this analysis can only sweep frequency.

For information on how to run PSP analysis from ADE, see *Periodic S-Parameter Analysis (PSP)* in the *Spectre Circuit Simulator and Accelerated Parallel Simulator RF Analysis User Guide*.

Definition

```
Name psp parameter=value ...
```

Parameters

Sweep interval parameters

1	`start=0`	Start sweep limit.

© 2003-2020 All Rights Reserved.

2	`stop`	Stop sweep limit.
3	`center`	Center of sweep.
4	`span=0`	Sweep limit span.
5	`step`	Step size, linear sweep.
6	`lin=50`	Number of steps, linear sweep.
7	`dec`	Points per decade.
8	`log=50`	Number of steps, log sweep.
9	`values=[...]`	Array of sweep values.
10	`valuesfile`	Name of the file containing the sweep values.
11	`sweeptype=unspecified`	Specifies if the sweep frequency range is the absolute frequency of input or if it is relative to the port harmonics. When the unspecified value is used, Spectre RF sweeps using relative when autonomous simulation is performed or when the analysis is PSP; for other cases Spectre RF sweeps the absolute value of the input. Possible values are `absolute`, `relative`, and `unspecified`.

Port parameters

12	`ports=[...]`	List of active ports. Ports are numbered in the specified order. For noise figure computation, the input is considered as port 1 and the output as port 2.
13	`portharmsvec=[...]`	List of harmonics that are active on specified list of ports. Must have a one-to-one correspondence with the `ports` vector.
14	`harmsvec=[...]`	List of harmonics, in addition to the ones associated with specific ports by `portharmsvec`, that are active.

© 2003-2020 All Rights Reserved.

Output parameters

15	`freqaxis`	Specifies whether the results should be printed as per the input frequency, the output frequency, or the absolute value of the input frequency. The default is `in`. Possible values are `absin`, `in`, and `out`.
16	`file`	Name of the output file. It only supports S-parameters in PSP, HBSP, and QPSP analyses.
17	`datafmt=spectre`	Data format of the S-parameter output file. Possible values are `spectre`, `touchstone`, and `touchstone2`.
18	`datatype=realimag`	Data type of the S-parameter output file. Possible values are `realimag`, `magphase`, and `dbphase`

Noise parameters

19	`onoise=yes`	Perform noise analysis. If `oprobe` is specified as a valid port, this parameter is set to `yes`, and a detailed noise output is generated. Possible values are `no` and `yes`.

Probe parameters

20	`maxsideband=7`	In shooting pnoise, the parameter determines the maximum sideband included when computing noise that is either up-converted or down-converted to the output by the periodic drive signal. In HB pnoise, the parameter determines the size of the small signal system when HB pnoise is performed. This parameter is critical for the accuracy of HB pnoise analysis; using a small value for `maxsideband` might cause accuracy loss. The default value for the shooting pnoise is 7. For the HB pnoise, the default is the `harms/maxharms` setting in the HB large signal analysis.

© 2003-2020 All Rights Reserved.

Convergence parameters

21	`tolerance`	Tolerance for the linear solver. The default value is 1.0e-9 for shooting-based solver, and 1.0e-4 for harmonic balance-based solver.
22	`relativeTol`	Relative tolerance for harmonic balance-based linear solver. The default value is 1.0e-2.
23	`gear_order=2`	Gear order used for small-signal integration.
24	`solver=turbo`	Solver type. Possible values are `std`, `turbo`, `std_hh`, and `turbo_hh`.
25	`oscsolver=turbo`	Oscillator solver type. It is recommended that you use `ira` for huge circuits. Possible values are `std`, `turbo`, `ira`, and `direct`.
26	`resgmrescycle=short`	‘Restarts GMRES cycle. Possible values are `instant`, `short`, `long`, `recycleinstant`, `recycleshort`, `custom`, and `recyclelong`.
27	`osc_version=dts`	Specifies the method to use in small signal analysis for autonomous circuit. Possible values are `floquet`, `augmented`, and `dts`.
28	`osc_accuracy=2`	Accuracy control in small signal analysis for autonomous circuit when `osc_version=dts`. The higher this value, the more iterations GMRES solver will take. Maximum effective value is 5.
29	`hbprecond_solver=autoset`	Select a linear solver for the GMRES preconditioner. Default is autoset. With autoset, the simulator will automatically select the appropriate preconditioner. The preconditioner affects the rate of convergence of the linear matrix solver used in periodic small-signal analysis. When autoset is selected, the simulator may decide to switch to a different preconditioner after the analysis begins. When that happens, the simulator may issue a warning instructing you to choose a different preconditioner during subsequent runs. Although not required, choosing a different preconditioner according to the simulator’s instructions may speed up subsequent analyses. Possible values are `basicsolver`, `blocksolver`, and `autoset`.

© 2003-2020 All Rights Reserved.

30	`lowmem=0`	Harmonic balance low memory mode. Possible values are `0`, `1`, or number (>=10). The default value is `0`, it indicates that the low memory mode is turned off; if `1` is set, the standard low memory mode is turned on; If a number greater that or equal to `10` is set, Spectre interprets the value as memory requested in Gigabytes.
31	`krylov_size=200`	The maximum iteration count of the linear matrix solver used in periodic small-signal analysis. After reaching `1.25*krylov_size` iterations, the iteration is forced to terminate because of the poor rate of convergence. Increase krylov_size if the simulation reports insufficient norm reduction errors in GMRES.

Annotation parameters

32	`annotate=sweep`	Degree of annotation. Possible values are `no`, `title`, `sweep`, `status`, `steps`, and `detailed_hb`.
33	`title`	Analysis title.

To specify the PSP analysis, the port and port harmonic relations must be specified. You can select the ports of interest by setting the `port` parameter, and the set of periodic small-signal output frequencies of interest by setting `portharmsvec` or the `harmsvec` parameters. For a given set of n integer numbers representing the harmonics K1, K2, ... Kn, the scattering parameters at each port are computed at the frequencies f(scattered)= f(rel) + Ki * fund(pss), where f(rel) represents the relative frequency of a signal incident on a port, f(scattered) represents the frequency to which the relevant scattering parameter represents the conversion, and fund(pss) represents the fundamental frequency used in the corresponding PSS analysis.

Therefore, when analyzing a down-converting mixer, with signal in the upper sideband, and sweeping the RF input frequency, the most relevant harmonic for RF input is Ki= 1 and for IF output is Ki= 0. Hence, we can associate K2=1 with the IF port and K1=0 with the RF port. S21 represents the transmission of signal from the RF to IF and S11 the reflection of signal back to the RF port. If the signal was in the lower sideband, a choice of K1=-1 would be more appropriate.

Either `portharmsvec` or `harmsvec` can be used to specify the harmonics of interest. If `portharmsvec` is given, the harmonics must be in one-to-one correspondence with the ports, with each harmonic associated with a single port. If harmonics are specified in the

© 2003-2020 All Rights Reserved.

optional `harmsvec` parameter, all possible frequency-translating scattering parameters associated with the specified harmonics are computed.

With PSP, the frequency of the input and of the response are usually different (this is an important area in which PSP differs from SP). Because the PSP computation involves inputs and outputs at frequencies that are relative to multiple harmonics, the `freqaxis` and `sweeptype` parameters behave differently in PSP than in PAC and PXF.

The `sweeptype` parameter controls the way the frequencies in the PSP analysis are swept. A `relative` sweep is a sweep relative to the analysis harmonics (not the PSS fundamental), and an `absolute` sweep is a sweep of the absolute input source frequency. For example, with a PSS fundamental of 100MHz, `portharmsvec` set to [9 1] to examine a down-converting mixer, `sweeptype=relative`, and a sweep range of f(rel)=0->50MHz, S21 would represent the strength of signal transmitted from the input port in the range 900->950MHz to the output port at frequencies 100->150MHz. Using `sweeptype=absolute` and sweeping the frequency from 900->950MHz would calculate the same quantities, because f(abs)=900->950MHz, and f(rel) = f(abs) - K1 * fund(pss) = 0->50MHz, where, K1=9 and fund(pss) = 100MHz.

Usually, it is not necessary to sweep frequency in PSP over more than one fundamental PSS period.

The `freqaxis` parameter is used to specify whether the results should be output versus the scattered frequency at the input port (`in`), the scattered frequency at the output port (`out`), or the absolute value of the frequency swept at the input port (`absin`). If `freqaxis` is `absin`, the S-parameters at negative frequencies are taken conjugate and output at corresponding positive frequencies.

Unlike in PAC/PXF/PNoise, increasing the number of requested ports and harmonics increases the simulation time substantially.

To ensure accurate results in PSP, the `maxacfreq` of the corresponding PSS analysis should be set to guarantee that | max{f(scattered)} | is less than `maxacfreq`; otherwise, the computed solution might be contaminated by aliasing effects.

PSP analysis also computes noise figures, equivalent noise sources, and noise parameters. The noise computation, which is skipped only when `donoise=no`, requires additional simulation time. If:

No = total output noise at frequency f

Ns = noise at the output due to the input probe (the source)

Nsi = noise at the output due to the image harmonic at the source

© 2003-2020 All Rights Reserved.

Nso = noise at the output due to harmonics other than input at the source

Nl = noise at the output due to the output probe (the load)

IRN = input referred noise

G = gain of the circuit

F = noise factor (single side band)

NF = noise figure (single side band)

Fdsb = double sideband noise factor

NFdsb = double sideband noise figure

Fieee = IEEE single sideband noise factor

NFieee = IEEE single sideband noise figure

Then:

IRN = sqrt(No^2/G^2)

F = (No^2 - Nl^2)/Ns^2

NF = 10*log10(F)

Fdsb = (No^2 - Nl^2)/(Ns^2+Nsi^2)

NFdsb = 10*log10(Fdsb)

Fieee = (No^2 - Nl^2 - Nso^2)/Ns^2

NFieee = 10*log10(Fieee).

When the results are output, IRN is named `in`, G is named `gain`, F, NF, Fdsb, NFdsb, Fieee, and NFieee are named `F`, `NF`, `Fdsb`, `NFdsb`, `Fieee`, and `NFieee`, respectively.

Note: The gain computed by PSP is the voltage gain from the actual circuit input to the circuit output, and not the gain from the internal port voltage source to the output.

To ensure accurate noise calculations, the `maxsideband` or `sidebands` parameters must be set to include the relevant noise folding effects. `maxsideband` is only relevant to the noise computation features of PSP.

© 2003-2020 All Rights Reserved.

You can define the sweep limits by specifying the end points or by providing the center value and span of the sweep. Steps can be linear or logarithmic, and you can specify the number of steps or the size of each step. In addition, you can specify a step size parameter (`step`, `lin`, `log`, or `dec`) to determine whether the sweep is linear or logarithmic. If you do not specify a step size parameter, the sweep is linear when the ratio of stop to start values is less than 10, and logarithmic when this ratio is 10 or greater. Alternatively, you may specify the particular values that the sweep parameter should take using the `values` parameter. If you specify both a specific set of values and a set specified using a sweep range, the two sets are merged and collated before being used. All frequencies are in Hertz.

Parameter Index

In the following index, the number corresponding to each parameter name indicates where to find the description of that parameter:

annotate 32
center 3
datafmt 17
datatype 18
dec 7
donoise 19
file 16
freqaxis 15
gear_order 23
harmsvec 14
hbprecond_solver 29
krylov_size 31
lin 6
log 8
lowmem 30
maxsideband 20
osc_accuracy 28
osc_version 27
oscsolver 25
portharmsvec 13
ports 12
relativeTol 22
resgmrescycle 26
solver 24
span 4
start 1
step 5
stop 2
sweeptype 11
title 33
tolerance 21
values 9
valuesfile 10

© 2003-2020 All Rights Reserved.

Periodic Steady-State Analysis (pss)

Description

This analysis computes the periodic steady-state (PSS) response of a circuit by using harmonic balance (in the frequency domain) or shooting (in the time domain). The simulation time of PSS analysis is independent of the time-constants of the circuit. In addition, PSS analysis determines the periodic operating point for the circuit. The periodic operating point can then be used during a periodic time-varying small-signal analysis, such as PAC, PXF, PNOISE, PSP, or PSTB.

Harmonic balance (HB) is efficient in simulating weak non-linear circuits while shooting is more suitable for highly non-linear circuits with sharply rising and falling signals. HB is also advantageous over shooting in handling frequency dependent components, such as delay, transmission line, and S-parameter data.

PSS analysis can handle both autonomous (non-driven) and driven (non-autonomous) circuits. Autonomous circuits, even though they are not driven by a time-varying stimulus, generate non-constant waveforms. Driven circuits require some time-varying stimulus to generate a time-varying response. The most common example of an autonomous circuit is an oscillator. Common driven circuits include amplifiers, filters, and mixers. When PSS is applied to autonomous circuits, it requires you to specify a pair of nodes, `p` and `n`. This is how PSS analysis determines whether it is being applied to an autonomous or a driven circuit. If the pair of nodes is supplied, PSS assumes the circuit is autonomous; if not, the circuit is assumed to be driven.

With driven circuits, specify the analysis `period` or its corresponding fundamental frequency `fund`. The `period` must be an integer multiple of the period of the drive signal or signals. Autonomous circuits have no drive signal, and the actual period of oscillation is not known precisely in advance. Instead, you specify an estimate of the oscillation period and PSS analysis computes the precise period along with the periodic solution waveforms.

PSS analysis consists of two phases, an initial transient phase, which initializes the circuit, and the shooting or harmonic balance phase, which computes the periodic steady-state solution. The transient phase consists of three intervals. The first interval starts at `tstart`, which is normally 0, and continues through the onset of periodicity `tonset` for the independent sources. The onset of periodicity, which is automatically generated, is the minimum time for which all sources are periodic. The second interval is an optional user-specified stabilization interval whose length is `tstab`. The final interval length is `period` for driven circuits, or four times `period` for autonomous circuits. This interval has a special use for the autonomous PSS analysis, that is, the PSS analysis monitors the waveforms in the circuit and develops a better estimate of the oscillation period. After the initial transient phase is complete, the shooting or HB phase begins. In this phase, the circuit is iteratively solved

© 2003-2020 All Rights Reserved.

using Newton method to find the periodic steady-state solution (and the period when applied to autonomous circuits).

For information on how to run PSS analysis from ADE, see *Overview of Periodic Steady-State (pss) Analysis* in the *Spectre Circuit Simulator and Accelerated Parallel Siumulator RF Analysis User Guide*.

Definition

```
Name  [p]  [n] pss parameter=value ...
```

Parameters

Simulation interval parameters

1	`period (s)`	Steady state analysis period (or its estimate for autonomous circuits).
2	`fund (Hz)`	Alternative to period specification. Steady state analysis fundamental frequency (or its estimate for autonomous circuits).
3	`autofund=no`	If the value is `yes`, the program ignores period/fund value and calculates the fundamental frequency automatically from source information. Possible values are `no` and `yes`.
4	`harms=9 for shooting, 10 for HB`	For shooting, it is the number of solution harmonics to output when `outputtype=freq` or `all`; for HB, it directly determines the solution dimension to be solved and impacts the accuracy and convergence of the simulation.
5	`autoharms=no`	Activates automatic harmonic number calculation in harmonic balance. Applies only if tstab>0 or if autotstab=yes. If a steady-state is reached, Spectre does a spectrum analysis to calculate the optimal number of harmonics for HB. The minimum number of harmonics is specified by `maxharms`. If steady-state is not reached to sufficient tolerance, autoharms may be disabled. Possible values are `no` and `yes`.

© 2003-2020 All Rights Reserved.

6	`tstab=0.0 s`	Extra stabilization time after the onset of periodicity for independent sources.
7	`autotstab=no`	Activates automatic initial transient (tstab) in harmonic balance and PSS shooting. If set to yes, the simulator decides whether to run tstab and for how long. Typically, the initial length of tstab is 50 periods, however, it could be longer depending on the type of circuit and its behavior. If steady-state is reached (or nearly reached), tstab terminates early. Possible values are `no` and `yes`.
8	`autosteady=no`	Activates automatic steady state detection during initial transient (tstab) in harmonic balance and PSS shooting. When steady state is reached (or nearly reached), tstab terminates early. This parameter applies only when tstab>0 or when autotstab=yes. Possible values are `0`, `1`, `no`, and `yes`. ■ `autosteady=no`|`0`: turns this feature off ■ `autosteady=yes`|`1`: activates this feature ■ `autosteady=2`: runs autosteady with lower steady state tolerance than autosteady=1 ■ `autosteady=2`: may help pss convergence but with higher tstab costs
9	`tstart=0.0 s`	Initial transient analysis start time.
10	`tstabenvlp=no`	Determines the envelope method to be used for tstab. If the value is set to `yes`, envelope method will be used for tstab. Default value is no. Possible values are `no` and `yes`.
11	`envlpname`	Name of envelope analysis to be performed at tstab for pss.

Time-step parameters

12	`maxstep (s)`	Maximum time step. The default is derived from `errpreset`.

© 2003-2020 All Rights Reserved.

13	`maxacfreq`	Maximum frequency requested in a subsequent periodic small-signal analysis. Default is derived from `errpreset` and `harms`. This parameter is valid only for shooting.
14	`step=0.001 periods`	Minimum time step that would be used solely to maintain the aesthetics of the results. This parameter is valid only for shooting.

Initial-condition parameters

15	`ic=all`	The value to be used to set the initial condition. Possible values are `dc`, `node`, `dev`, and `all`.
16	`skipdc=no`	If set to `yes`, there is no DC analysis for initial transient. Possible values are `no`, `yes`, and `sigrampup`.
17	`readic`	File that contains initial condition.
18	`oscic=default`	Oscillator IC method. It determines how the starting values for the oscillator are calculated. `oscic=lin` provides you an accurate initial value, but it takes time. `oscic=lin_ic`, which is an older version of `oscic=lin` is used for shooting analysis for backward compatibility and is not recommended. `oscic=fastic` is fast, but it is less accurate. `oscic=skip` directly uses the frequency you provided as the initial guess frequency. It is only for two-tier method. Possible values are `default`, `lin`, `lin_ic`, `fastic`, and `skip`.
19	`useprevic=no`	If set to `yes` or `ns`, use the converged initial condition from previous analysis as `ic` or `ns`. Possible values are `no`, `yes`, and `ns`.

Convergence parameters

20	`readns`	File that contains an estimate of the initial transient solution.
21	`cmin=0 F`	Minimum capacitance from each node to ground.

© 2003-2020 All Rights Reserved.

Output parameters

22	`harmsvec=[...]`	Array of desired harmonics. An alternative form of `harms` that allows selection of specific harmonics. This parameter is valid only for shooting.
23	`outputtype= all''`	Output type. Possible values are `all`, `time`, and `freq`.
24	`save`	Signals to output. Possible values are `all`, `lvl`, `allpub`, `lvlpub`, `selected`, `none`, and `nooutput`.
25	`nestlvl`	Levels of subcircuits to output.
26	`oppoint=no`	Should operating point information be computed for initial timestep; if yes, where should it be printed (screen or file). Possible values are `no`, `screen`, `logfile`, and `rawfile`.
27	`skipstart=0 s`	The time to start skipping output data.
28	`skipstop=stop s`	The time to stop skipping output data.
2	`skipcount=1`	Save only one of every skipcount points.
30	`strobeperiod=0 s`	The output strobe interval (in seconds) of transient time.
31	`strobedelay=0 s`	The delay (phase shift) between the `skipstart` time and the first strobe point.
32	`saveinit=no`	If set to `yes`, the waveforms for the initial transient before steady state are saved. Possible values are `no` and `yes`.

State-file parameters

33	`write`	File to which initial transient solution (before steady-state) is written.
34	`writefinal`	File to which final transient solution in steady-state is written. This parameter is now valid only for shooting.
35	`swapfile`	Temporary file to hold steady-state information. It tells Spectre to use a regular file, rather than virtual memory to hold the periodic operating point. Use this option if Spectre complains about not having enough memory to complete the analysis. This parameter is now valid only for shooting.

© 2003-2020 All Rights Reserved.

36	`writepss`	File to which the converged steady-state solution is written. The file of shooting and HB cannot be mutually reused.
37	`readpss`	File from which a previously converged steady-state solution is read. For shooting method, PSS loads the solution and checks the residue of the circuit equations only. The solution is re-used if the residue is satisfactory. Otherwise, the solution is re-converged using the finite difference method. The results from shooting QPSS cannot be used in HB QPSS analysis and vice-versa.
38	`checkpss=yes`	If set to `yes`, the previous PSS results (from `readpss` file) are checked and PSS+MIC is rerun if any condition has changed. If set to `no`, the simulator assumes that nothing has changed and uses the solution from the file without checking and running PSS+MIC again. This parameter is now valid only for shooting. Possible values are `no` and `yes`.

Integration method parameters

39	`method`	Integration method. The default is derived from `errpreset`. This parameter is valid only for shooting. Possible values are `euler`, `trap`, `traponly`, `gear2`, and `gear2only`.
40	`tstabmethod`	Integration method used in stabilization time. The default is `traponly` for autonomous circuits, or is derived from `errpreset` for driven circuits. Possible values are `euler`, `trap`, `traponly`, `gear2`, and `gear2only`.

Accuracy parameters

41	`errpreset`	Selects a reasonable collection of parameter settings. Possible values are `liberal`, `moderate`, and `conservative`.

© 2003-2020 All Rights Reserved.

42	`relref`	Reference used for the relative convergence criteria. The default is derived from `errpreset`. Possible values are `pointlocal`, `alllocal`, `sigglobal`, and `allglobal`.
43	`lteratio`	Ratio used to compute LTE tolerances from Newton tolerance. The default is derived from `errpreset`.
44	`lteminstep=0.0 s`	Local truncation error is ignored if the step size is less than `lteminstep`.
45	`steadyratio`	Ratio used to compute steady state tolerances from LTE tolerance. The default is derived from `errpreset`.
46	`maxperiods`	Maximum number of iterations allowed before convergence is reached in shooting or harmonic balance Newton iteration. For PSS and QPSS, the default is 20 for driven circuits, and 50 for oscillators. For HB, the default is 100. Default value for shooting APS flow is `1e-3`.
47	`max_innerkrylov_size=20`	The maximum iteration number allowed in inner gmres solver in two-level gmres linear solver. The default value is 12 for large signal and 20 for small signal analysis.
48	`max_outerkrylov_size=4`	The maximum iteration number allowed in inner gmres solver in two-level gmres linear solver. The default value is 4.
49	`itres=1e-4 for shooting, 0.9 for HB`	Controls the residual for iterative solution of linearized matrix equation at each Newton iteration. Tightening the parameter can help with the Newton convergence, but does not affect the result accuracy. The value should be between [0, 1].
50	`inexactNewton=no`	Inexact Newton method. Possible values are `no` and `yes`.
51	`finitediff`	Enable finite difference method refinement for driven circuits after shooting method. Possible values are `no`, `yes`, and `refine`.

© 2003-2020 All Rights Reserved.

52	highorder	Perform a high-order refinement after low-order convergence. The Multi-Interval Chebyshev polynomial spectral algorithm is used. This parameter is only valid for shooting. Possible values are no and yes.
53	psaratio=1	Ratio used to compute high-order polynomial spectral accuracy from Newton tolerance. This parameter is only valid for shooting.
54	maxorder	The maximum order of the Chebyshev polynomials used in waveform approximation. Possible values are from 2 to 16. Default value is 16 for driven circuits and 12 for autonomous circuits. This parameter is valid only for shooting.
55	fullpssvec	Use the full vector containing solutions at all PSS time steps in the linear solver. The default is derived from the size of the equation and the property of the PSS time steps. This parameter is valid only for shooting. Possible values are no and yes.
56	fdharms=10	Number of harmonics considered for distributed (frequency-domain) components, such as nport, delay, mtline, and delayed controlled sources. This parameter is valid only for shooting and for those components for which the Fmax parameter of neither model nor instance is set.

Harmonic Balance parameters

57	harmonicbalance=no	Use Harmonic Balance engine instead of time-domain shooting. Possible values are no and yes.
58	flexbalance=no	Same parameter as harmonicbalance. Possible values are no and yes.
59	pinnode	Node to pin during autonomous HB simulation.
60	pinnodeminus	Second node to pin during autonomous HB simulation. Needed only when differential nodes exist in oscillator.
61	pinnoderank	Harmonic rank to pin during autonomous HB simulation.
62	pinnodemag	This parameter gives an estimate of the magnitude of the pin node voltage. Default value is 0.01.

© 2003-2020 All Rights Reserved.

63	`oversamplefactor=1`	Oversample device evaluations.
64	`oversample=[...]`	Array of oversample factors for each tone. This parameter overrides `oversamplefactor`.
65	`oscmethod`	Osc Newton method for autonomous HB. Possible values are `onetier` and `twotier`.
66	`hbhomotopy=tone`	Name of Harmonic Balance homotopy selection methods. Possible values are `tstab`, `source`, `gsweep`, `tone`, `inctone`, and `aggregation`.
67	`sweepic=none`	IC extrapolation method in sweep HB analysis. Possible values are `none`, `linear`, and `log`.
68	`gstart=1.e-7`	Start conductance for hbhomotopy of gsweep.
69	`gstop=1.e-12`	Stop conductance for hbhomotopy of gsweep.
70	`glog=5`	Number of steps, log sweep for hbhomotopy of gsweep.
71	`backtracking=yes`	This parameter is used to activate the back tracking utility of Newton's Method. Default is `yes`. Possible values are `no`, `yes`, and `forced`.
72	`excludeconvgwithBK=yes`	Possible values are `no` and `yes`.
73	`krylov_size=10`	The minimum iteration count of the linear matrix solver used in HB large-signal analysis. After reaching `krylov_size` iterations, the iteration is forced to terminate because of poor rate of convergence. Increase `krylov_size` if the simulation reports insufficient norm reduction errors in GMRES.
74	`hbprecond_solver=basicsolver`	Choose a linear solver for the GMRES preconditioner. Possible values are `basicsolver`, `blocksolver`, `autoset`, `blockdense`, and `blocksolver2`.
75	`lowmem=0`	Harmonic balance low memory mode; Possible values are `0`, `1`, or number (>=`10`). The default value is `0`, it indicates that the low memory mode is turned off; if `1` is set, the standard low memory mode is turned on; If a number greater that or equal to `10` is set, Spectre interprets the value as memory requested in Gigabytes.

© 2003-2020 All Rights Reserved.

Annotation parameters

76	`annotate=sweep`	Degree of annotation. Possible values are `no`, `title`, `sweep`, `status`, `estimated`, `steps`, `iters`, `detailed`, `rejects`, `alliters`, `detailed_hb`, and `internal_hb`.
77	`annotateic=no`	Degree of annotation for initial condition. Possible values are `no`, `title`, `sweep`, `status`, `estimated`, `steps`, `iters`, `detailed`, `rejects`, and `alliters`.
78	`title`	Analysis title.

Newton parameters

79	`maxiters=5`	Maximum number of iterations per time step.
80	`restart=no`	Restart the DC/PSS solution if set to `yes`; if set to `no`, reuse the previous solution as an initial guess; if set to `firstonly`, restart if it is first point of sweep (only supported in HB). The default value is `no` for HB and `yes` for shooting. Possible values are `no`, `yes`, and `firstonly`.

Circuit age

81	`circuitage (Years)`	Stress time. Age of the circuit used to simulate hot-electron degradation of MOSFET and BSIM circuits.

Tstab save/restart parameters

82	`saveperiod`	Save the tran analysis periodically on the simulation time.
83	`saveperiodhistory=no`	Maintains the history of saved files. If `yes`, stores all the saved files. Possible values are `no` and `yes`.

© 2003-2020 All Rights Reserved.

84	`saveclock (s)`	Save the tran analysis periodically on the wall clock time. The default is 1800s for Spectre. This parameter is disabled in the Spectre APS mode by default.
85	`savetime=[...]`	Save the analysis states into files on the specified time points.
86	`savefile`	Save the analysis states into the specified file.
87	`recover`	Specify the file to be restored.

Oscillator PPV parameters

88	`ppv=no`	If set to `yes`, save the oscillators' perturbation projection vector (PPV) representing the oscillators' phase sensitivity to perturbations in the voltage or current at the nodes of the oscillator. Possible values are `no` and `yes`.

Compression parameters

89	`xdbcompression="no"`	Sets the automatic gain compression analysis. In automatic gain compression analysis, Spectre automatically sweeps the input excitation until the gain, as defined by the analysis parameter xdbgain, compresses by the amount specified by the analysis parameter xdblevel. In gain compression analysis, Spectre outputs the hb solution at the calculated compression point only. Dependent analyses, such as hbnoise and hbac, are supported and calculated about the calculated compression level. Auxiliary output includes the gain and voltage/power compression curves. These outputs are available for analysis and post-processing in ADE. The possible values are `yes` and `no`. Default is `no`.
90	`xdblevel=[...]`	Sets the gain compression level for compression analysis. The reference point for gain compression is the small-signal gain of the circuits, or as specified by the analysis parameter `xdbref`. Default is `1`.

© 2003-2020 All Rights Reserved.

91	`xdbgain="power"`	Chooses between the voltage gain or transducer power gain as the target for compression point calculation. When `xdbgain=power`, the gain is defined as *G (dB) = Pload (dBm) - Pavailable (dBm)*. When `xdbgain=voltage`, the gain is defined as *G (dB) = dB20(|Vload|/|Vsource|)*. In both cases, Spectre sweeps the excitation source until *xdbref - G = xdblevel*, where the analysis parameter xdbref defines the reference level for compression calculation. Possible values are `power` and `voltage`. Default is `power`.
92	`xdbref="linear"`	Sets the reference point for gain compression calculations. When `xdbref=linear`, spectre uses the small-signal gain as the reference. When `xdbref=max`, spectre uses the maximum observed gain as the reference. Possible values are `linear` and `max`. Default is `linear`.
93	`xdbsource`	The instance name of the excitation source, which is swept automatically to reach the compression level. When `xdbgain=power`, the excitation source must be a port instance. When `xdbgain=voltage`, the excitation source must be a vsource instance.
94	`xdbload`	The instance name of the load termination. When `xdbgain` is `power`, `xdbload` can be a port, a resistor, or a current probe.
95	`xdbnodep`	The output terminals for voltage gain calculation when `xdbgain=voltage`. If either is left unspecified, the terminal is assumed to be the global ground.
96	`xdbnoden`	The output terminals for voltage gain calculation when `xdbgain=voltage`. If either is left unspecified, the terminal is assumed to be the global ground.
97	`xdbrefnode`	The reference node when `xdbload` is a current probe. The default is the ground node.
98	`xdbharm=[...]`	The Integer array which specifies the harmonic indexes of the output voltage or power component.
99	`xdbsteps=100`	The maximum number of steps for the compression point search. The simulator terminates if `xdbsteps` exceeds before the compression point is found. The default is `100`.

© 2003-2020 All Rights Reserved.

100	`xdbmax`	The maximum input power (or voltage) for the compression point search. Default is `30 dBm` when `xdbgain=power` and `2.0V` when `xdbgain=voltage`.
101	`xdbstart`	The starting input power (or voltage) for the compression point search. Default is (xdbmax-70) dBm when `xdbgain=power`, and xdbmax/20000 when `xdbgain=voltage`.
102	`xdbtol=0.01`	Sets the tolerance for compression analysis. This tolerance is used in compression curve fitting and calculating the compression point.
103	`xdbrapid="no"`	Sets the automatic gain compression analysis in rapid mode. In this mode, Spectre does not trace the compression curve and calculates only the compression point.
104	`xdbcpi`	Sets the estimated input-referred compression point for rapid compression analysis.
105	`backoff`	The backoff point. If defined, an additional harmonic balance analysis is performed after the compression analysis is done. Default is 0 dBm when `xdbgain=power`, and 0 V when `xdbgain=voltage`.

© 2003-2020 All Rights Reserved.

Memory estimation parameters

106	`memoryestimate="no"`	Sets the memory usage estimate for Harmonic Balance. If yes, a memory estimate is printed in the log file. You can use this memory estimate to plan the computing resources before submitting harmonic balance runs. In memory estimate mode, a short simulation is performed first, and the engine exits after printing the estimate in the log file without saving any results. If set to `no`, the simulation continues after the memory estimate is printed. Memory estimation is not recommended for simulations that require less than 500MB approximately. For PSS analysis, memory estimate mode does not apply unless `flexbalance=yes`. Possible values are `no` and `yes`. `memoryestimate=1` estimates the memory usage for large-signal analysis and `memoryestimate=2` estimates both large-signal analysis and small-signal simulations.

Oscillator tuning mode parameters

107	`tuneparam`	When set, `tuneparam` enables the tuning mode oscillator analysis. In the tuning mode analysis, a circuit parameter is automatically varied to reach the oscillation frequency specified by the fundfreqs parameter. The tuning parameter can be a device instance parameter (as determined by the parameters `tunedev`) or a netlist parameter. This mode applies only to autonomous circuits (oscillators).
108	`tunedev`	Sets the instance name of a device whose parameter (identified by `tuneparam)` will be varied such that the circuit oscillates at the specified frequency. Applies only in tuning mode autonomous analysis. `Tunedev` must be used with `tuneparam`.
109	`tunerange=[...]`	The tuning range of the parameter identified by `tuneparam`. Although `tunerange` is not required, it can aid in convergence, if set.
110	`tunestep`	Specify the step size between two adjacent discrete tuning points. Must be used with 'tunerange'.

© 2003-2020 All Rights Reserved.

111	`tunelin`	Specify the numbers of discrete tuning points. Must be used with 'tunerange'.
112	`tunevalues=[...]`	Specify the values of discrete tuning points.

LSSP parameters

113	`lsspports=[...]`	Specifies the list of ports on which the large-signal 2-port S-parameters are calculated.
114	`lsspharms=[...]`	Specifies the output harmonic for large-signal S-parameter calculations. The input harmonic is defined by the frequency parameters on the input port instance.
115	`lsspfile`	Identifies the file name for large-signal S-parameter output.
116	`lsspdatafmt="touchtone"`	Sets the file format of the large-signal S-parameter output. Possible values are `spectre` and `touchstone`. Default is `touchtone`.
117	`lsspdatatype="msgphase"`	Sets the data format or the large-signal S-parameter output. Possible values are `realimag`, `magphase` and `phase`. Default is `magphase`.

Dynamic parameters

118	`param`	Name of the parameter to be updated during pss/hb analysis (tstab stage). With `param=paramName` and `param_vec=[t1 value1 t2 value2. valuen tn]`, `paramName` is set to `value1` at `t1` and `value2` at `t2`, etc. Pss/hb analysis uses the last value in the `param_vec(valuen)` to find the steady state.
119	`paramset`	Name of the dynamic parameter set.
120	`param_vec=[...]`	The `time_value` points to `param=name`.
121	`param_file`	The file that contains the `time_value` points to `param=name`.
122	`sub`	Name of the subcircuit instance parameter specified in `param=name`.

© 2003-2020 All Rights Reserved.

123	`mod`	Name of the device model parameter specified in `param=name`.
124	`dev`	Name of the device instance parameter specified in `param=name`.
125	`param_step`	Defines the frequency of updating the dynamic parameter values. If `param_step=0`, it updates the parameter value at a given time point.

The initial transient analysis provides a flexible mechanism to direct the circuit to a particular steady-state solution of interest, and to avoid undesired solutions. Another use of the initial transient simulation is to help in convergence by eliminating large but fast decaying modes that are present in many circuits. For example, in case of driven circuits, consider the reset signal in the figure below.

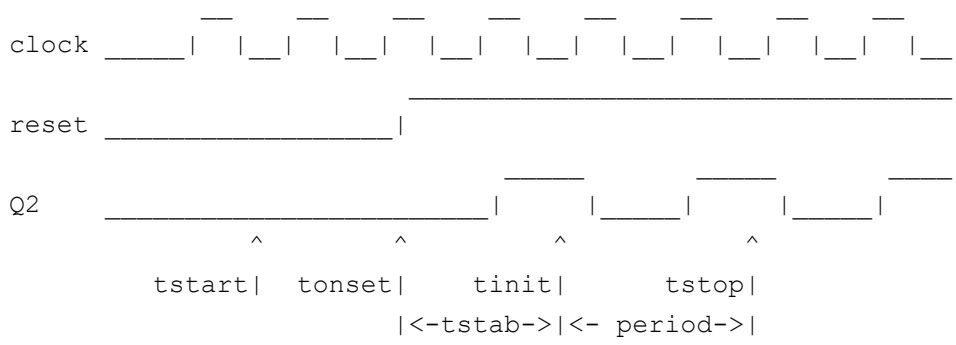

In the above figure, the initial transient analysis runs from `tstart` to `tstop`. If initial transient results are relevant, you can output them by setting `saveinit` to yes. The steady-state results are always computed for the specified `period`, from `tinit` to `tstop`. By default, `tstart` and `tstab` are set to zero, while `tinit`, `tonset` and `tstop` are always automatically generated.

It happens in some circuits that the linearity of the relationship between the initial and final state depends on when the shooting or HB begins. Conceptually, when shooting or HB begins should not matter, as long as it is after the time when the stimuli have become periodic, because the periodic response repeats endlessly. However, in practice, starting at a good point can improve the convergence, and starting at a bad point can degrade the convergence and slow down the analysis. In general, it is best to try to avoid starting the shooting interval at a point where the circuit is undergoing strong nonlinear behavior. For example, when shooting is used to simulate switch-capacitor filters, it is best if `tinit` falls at the beginning of a clock transition, preferably a transition that follows a relatively long period of settling. If instead `tinit` occurred during a clock transition or soon after one, it is likely that the opamps will undergo slew-rate limiting at the start of the shooting interval, which will slow convergence. Switching mixers follow similar rules.

© 2003-2020 All Rights Reserved.

When PSS analysis simulates oscillators, either transient or linear initialization is performed to obtain an initial guess of the steady-state solution and the oscillating frequency. Two initialization methods are implemented based on transient and linear analysis, respectively. When `oscic=default` is specified, transients initialization is used and the length of the transient is specified by `tstab`. It is necessary to start the oscillator by using initial conditions, or by using a brief impulsive stimulus, just as you would if you were simulating the turn-on transient of the oscillator using transient analysis. Initial conditions would be provided for the components of the oscillators' resonator. If an impulsive stimulus is used, it should be applied so as to couple strongly into the oscillatory mode of the circuit, and poorly into any other long-lasting modes, such as those associated with bias circuitry. The Designers Guide to Spice and Spectre [K. S. Kundert, Kluwer Academic Publishers, 1995] describes techniques for starting oscillators in some depth. When `oscic=default` is specified, `oscic=lin`, linear initialization is used. In this method, both oscillation frequency and amplitude are estimated based on linear analysis at DC solution. No impulsive stimulus or initial conditions are needed. Linear initialization is suitable for linear type of oscillators, such as LC and crystal oscillators.

Note: tstab transient is still performed after linear initialization though it can be significantly shortened (or skipped in HB). Either way, specifying a non-zero `tstab` parameter can improve convergence.

By default, only the time-domain results are computed in shooting. If you specify either `harms` or `harmsvec`, or set `outputtype` to `freq` or `all`, the frequency-domain results will also be computed. If frequency-domain results are requested, but the desired harmonics are not specified, its default value is 9. The time-domain output waveform generation can be inhibited by setting `outputtype` to `freq`.

The accuracy of the results does not depend on the number of harmonics that are requested, but only on the accuracy parameters, which are set in the same fashion as in the transient analysis. Besides a few new parameters, like `steadyratio` and `maxacfreq`, all the others parameters work in PSS analysis in the same manner as they work on transient analysis. For HB, besides `reltol`, `abstol`, `steadyratio` and `lteratio`, the number of harmonics has the most impact on the accuracy of simulation results. When too few harmonics are used, an error occurs due to the aliasing effect. To obtain accurate results, `harms` should be big enough to cover the signal bandwidth.

Several parameters determine the accuracy of the PSS analysis. `reltol` and `abstol` control the accuracy of the discretized equation solution. These parameters determine how well charge is conserved and how accurately steady-state or equilibrium points are computed. You can set the integration errors in the computation of the circuit dynamics (such as time constants), relative to `reltol` and `abstol`, by setting the `lteratio` parameter.

For shooting, the `steadyratio` parameter adjusts the maximum allowed mismatch in node voltages or current branches from the beginning to the end of the steady-state period. For HB,

© 2003-2020 All Rights Reserved.

the steadyratio parameter adjusts the maximum allowed error in the node voltages or in the current branches of the steady-state. This value is multiplied by lteratio and reltol to determine the convergence criterion. The relative convergence norm is printed along with the actual mismatch value at the end of each iteration, indicating the progress of the steady-state iteration.

For shooting, the parameter maxperiods controls the maximum number of shooting iterations for PSS analysis. Its default value is set to 20 for driven PSS and 50 for autonomous PSS. For HB, the parameter maxperiods controls the maximum number of HB iterations for both driven and autonomous HB analysis. Its default value is set to 100.

The finitediff parameter allows the use of finite difference (FD) after shooting. Usually this eliminates the above mismatch in node voltages or current branches. It can also refine the grid of time steps. In some cases, numerical error of the linear solver still introduces a mismatch. You can set steadyratio to a smaller value to activate a tighter tolerance for the iterative linear solver. If finitediff is set to no, FD method is turned off. If it is set to yes, PSS applies FD method and tries to improve the beginning small time steps, if necessary. If it is set to refine, PSS applies FD method and tries to refine the time steps. When the simulation uses second-order method, uniform second order gear is used. finitediff is automatically changed from no to yes when readpss and writepss are specified to re-use PSS results.

The maxacfreq parameter is used to automatically adjust the maxstep and reduce errors due to aliasing in frequency-domain results. By default, the maxacfreq is set to four times the frequency of the largest requested harmonic, but is never set to less than forty times the fundamental.

The parameter relref determines how the relative error is treated. The relref values are as follows:

- relref=pointlocal: Compares the relative errors in quantities at each node to that node alone.
- relref=alllocal: Compares the relative errors at each node to the largest values found for that node alone for all past time.
- relref=sigglobal: Compares relative errors in each circuit signal to the maximum for all signals at any previous point in time.
- relref=allglobal: Same as relref=sigglobal, except that it also compares the residues (KCL error) for each node to the maximum of each node's past history.

The errpreset parameter lets you adjust the simulator parameters to fit your needs quickly. In most cases, it should also be the only parameter you need to adjust.

Guidelines for using errpreset in driven circuits in shooting are as follows:

© 2003-2020 All Rights Reserved.

- If the circuit contains only one periodic tone and you are only interested in obtaining the periodic operating point, set errpreset to `liberal`. This setting provides reasonably accurate result and the fastest simulation speed.
- If the circuit contains more than one periodic tone and you are interested in intermodulation results, set errpreset to `moderate`. This setting provides accurate results.
- If you want a low noise floor in your simulation result and accuracy is your main interest, set errpreset to `conservative`.

The effect of `errpreset` on other parameters for driven circuits is shown in the following table.

Table 3-2 Parameter defaults and estimated numerical noise floor in simulation result as a function of `errpreset`

errpreset	reltol	relref	method	lteratio	steadyratio	maxstep
liberal	1e-3	sigglobal	traponly	3.5	0.001	period/50
moderate	1e-3	alllocal	gear2only	3.5	0.001	period/200
conservative	1e-4	alllocal	gear2only	*	0.01	period/200

* : lteratio=10.0 for conservative `errpreset`. Only if user-specified reltol <= 1e-4 * 10.0/3.5, lteratio is set to 3.5.

The new errpreset settings include a new default `reltol` that is the upper limit. An increase of `reltol` above the default is ignored by the simulator. You can decrease this value in the options statement. The only way to increase `reltol` is to relax `errpreset`.

Estimated numerical noise floor for a weak non-linear circuit is -70dB for `liberal`, -90dB for `moderate`, and -120dB for `conservative` settings. For a linear circuit, the noise floor is even lower.Multi-interval Chebyshev (MIC) is activated when you explicitly set `highorder=yes`, which drops numerical noise floor by at least 30dB. MIC falls back to the original method if it encounters difficulty converging. You can tighten `psaratio` to further drop numerical noise floor.

Spectre sets the value of `maxstep` so that it cannot be larger than the value given in the table. Except for `reltol` and `maxstep`, `errpreset` does not change the value of parameters that you explicitly set. The actual values used for the PSS analysis are given in the log file. If `errpreset` is not specified in the netlist, `liberal` settings is used. For HB, only `reltol` is affected by `errpreset` and the effect is the same as that in shooting. However, `lteratio` remains 3.5 and `steadyratio` remains 1 with all values of `errpreset`.

© 2003-2020 All Rights Reserved.

Guidelines for using errpreset in autonomous circuits are as follows:

- If you want a fast simulation with reasonable accuracy, you can set `errpreset` to `liberal`.
- If you have some concern for accuracy, you can set errpreset to `moderate`.
- If accuracy is your main interest, you can set errpreset to `conservative`.

The effect of `errpreset` on other parameters for autonomous circuits is shown in the following table.

Table 3-3 Parameter defaults as a function of errpreset

errpreset	reltol	relref	method	lteratio	steadyratio	maxstep
liberal	1e-3	sigglobal	traponly	3.5	0.001	period/50
moderate	1e-4	alllocal	gear2only	3.5	0.01	period/200
conservative	1e-5	alllocal	gear2only	*	0.1	period/400

* : lteratio=10.0 for conservative `errpreset` by default. Only if user-specified reltol <= 1e-5*10.0/3.5, lteratio is set to 3.5.

The value of `reltol` can be decreased from default in the options statement. The only way to increase `reltol` is to relax `errpreset`. Spectre sets the value of `maxstep` so that it cannot be larger than the value given in the table. Except for `reltol` and `maxstep`, `errpreset` does not change the value of any parameters you have explicitly set. The actual values used for the PSS analysis are given in the log file. If `errpreset` is not specified in the netlist, `liberal` settings will be used. Multi-interval Chebyshev (MIC) is activated when you explicitly set `highorder=yes`, which drops numerical noise floor by at least 30dB. MIC falls back to the original method if it encounters difficulty in converging. You can tighten `psaratio` to further drop numerical noise floor.

A long stabilization (by specifying a large tstab) can help with PSS convergence. However, it can slow down simulation. By default, in the stabilization stage, the following settings are used: reltol=1e-3, maxstep=period/25, relref=sigglobal, and method=traponly. These settings are overwritten when maxstep, relref, or tstabmethod are specified explicitly in pss statement, or reltol is specified explicitly in options statement.

If the circuit you are simulating has infinitely fast transitions (for example, a circuit that contains nodes with no capacitance), Spectre might have convergence problems. To avoid this, you must prevent the circuit from responding instantaneously. You can accomplish this

© 2003-2020 All Rights Reserved.

by setting `cmin`, the minimum capacitance to ground at each node, to a physically reasonable nonzero value. This often significantly improves Spectre convergence.

You can specify the initial condition for the transient analysis by using the `ic` statement or the `ic` parameter on the capacitors and inductors. If you do not specify the initial condition, the DC solution is used as the initial condition. The `ic` parameter on the transient analysis controls the interaction of various methods of setting the initial conditions. The effects of individual settings are as follows:

- `ic=dc`: All initial conditions are ignored, and the DC solution is used.
- `ic=node`: The `ic` statements are used, and the `ic` parameter on the capacitors and inductors is ignored.
- `ic=dev`: The `ic` parameters on the capacitors and inductors are used, and the `ic` statements are ignored.
- `ic=all`: Both `ic` statements and `ic` parameters are used, and the `ic` parameters override the `ic` statements.

If you specify an initial condition file with the `readic` parameter, initial conditions from the file are used, and any `ic` statements are ignored.

After you specify the initial conditions, Spectre computes the actual initial state of the circuit by performing a DC analysis. During this analysis, Spectre forces the initial conditions on nodes by using a voltage source in series with a resistor whose resistance is `rforce` (see `options`).

With the `ic` statement, it is possible to specify an inconsistent initial condition (one that cannot be sustained by the reactive elements). Examples of inconsistent initial conditions include setting the voltage on a node with no path of capacitors to ground, or setting the current through a branch that is not an inductor. If you initialize Spectre inconsistently, its solution jumps, that is, it changes instantly at the beginning of the simulation interval. You should avoid such changes because Spectre can have convergence problems while trying to make the jump.

You can skip DC analysis entirely by using the parameter `skipdc`. If DC analysis is skipped, the initial solution is trivial or is given in the file that you specified by using the `readic` parameter, or if the `readic` parameter is not specified, by the values specified on the ic statements. Device-based initial conditions are not used for `skipdc`. Nodes that you do not specify with the `ic` file or `ic` statements start at zero. You should not use this parameter unless you are generating a nodeset file for circuits that have trouble in the DC solution; it usually takes longer to follow the initial transient spikes that occur when the DC analysis is skipped than it takes to find the real DC solution. The `skipdc` parameter might also cause convergence problems in the transient analysis.

© 2003-2020 All Rights Reserved.

The possible settings of parameter `skipdc` and their meanings are as follows:

`skipdc=no`: Initial solution is calculated using normal DC analysis (default).

`skipdc=yes`: Initial solution is given in the file specified by the `readic` parameter or the values specified on the ic statements.

`skipdc=sigrampup`: Independent source values start at 0 and ramp up to their initial values in the first phase of the simulation. The waveform production in the time-varying independent source is enabled after the rampup phase. The rampup simulation is from `tstart` to time=0 s, and the main simulation is from time=0 s to `tstab`. If the `tstart` parameter is not specified, the default `tstart` time is set to -0.1*`tstab`.

Nodesets help find the DC or the initial transient solution. You can specify nodesets in the circuit description file with nodeset statements or in a separate file by using the `readns` parameter. When nodesets are specified, Spectre computes an initial guess of the solution by performing a DC analysis, while forcing the specified values on to nodes by using a voltage source in series with a resistor whose resistance is `rforce`. Spectre then removes these voltage sources and resistors and computes the required solution from this initial guess.

Nodesets have two important uses. First, if a circuit has two or more solutions, nodesets can bias the simulator towards computing the required solution. Second, they are a convergence aid. By estimating the solution of the largest possible number of nodes, you might be able to eliminate a convergence problem or dramatically speed convergence.

When you simulate the same circuit multiple times, it is recommended that you use both `write` and `readns` parameters and assign the same file name to both parameters. DC analysis then converges quickly even if the circuit has changed since the last simulation, and the nodeset file is automatically updated.

Nodesets and initial conditions have similar implementation, but produce different effects. Initial conditions define the solution, whereas nodesets only influence it. When you simulate a circuit with a transient analysis, Spectre forms and solves a set of differential equations. Because differential equations have an infinite number of solutions, a complete set of initial conditions must be specified to identify the required solution. Any initial conditions that you do not specify are computed by the simulator to be consistent. The transient waveforms then start from initial conditions. Nodesets are usually used as a convergence aid and do not affect the final results. However, in a circuit with more than one solution, such as a latch, nodesets bias the simulator towards finding the solution closest to the nodeset values.

The `method` parameter specifies the integration method. The possible settings and their meanings are as follows:

`method=euler`: Backward-Euler is used exclusively.

© 2003-2020 All Rights Reserved.

`method=traponly`: Trapezoidal rule is used almost exclusively.

`method=trap`: Backward-Euler and the trapezoidal rule are used.

`method=gear2only`: Gear's second-order backward-difference method is used almost exclusively.

`method=gear2`: Backward-Euler and second-order Gear are used.

The trapezoidal rule is usually the most efficient when you want high accuracy. This method can exhibit point-to-point ringing, but you can control this by tightening the error tolerances. For this reason, though, if you choose loose tolerances to get a quick answer, the backward-Euler or second-order Gear will probably give better results than the trapezoidal rule. Second-order Gear and backward-Euler can make systems appear more stable than they are. This effect is less pronounced with second-order Gear or when you request high accuracy.

Spectre provides two methods for reducing the number of output data points saved: `strobing`, based on the simulation time, and `skipping` time points, which saves only every N'th point.

The parameters `strobeperiod` and `strobedelay` control the strobing method. `strobeperiod` sets the interval between the points that you want to save, and `strobedelay` sets the offset within the period relative to `skipstart`. The simulator forces a time step on each point to be saved, so that the data is computed, and not interpolated.

The skipping method is controlled by `skipcount`. If this is set to N, only every N'th point is saved.

The parameters `skipstart` and `skipstop` apply to both data reduction methods. Before `skipstart` and after `skipstop`, Spectre saves all computed data.

With parameter `hbhomotopy`, you can specify harmonic balance homotopy selection methods. The possible values of parameter `hbhomotopy` and their meanings are as follows:

`hbhomotopy=tstab`: Simulator runs a transient analysis and generates an initial guess for harmonic balance analysis; it is recommended for nonlinear circuits or circuits with frequency dividers.

`hbhomotopy=source`: For driven circuit, the simulator ignores tstab and accordingly increases the source power level; for oscillators, the simulator accordingly adjusts the probe magnitude until the probe has no effect on the oscillators. It is recommended for strongly nonlinear or high Q circuits

`hbhomotopy=tone`: This method is valid only for multi-tone circuit. The simulator first solves a single-tone circuit by turning off all the tones, except the first one, and then solves the multi-

© 2003-2020 All Rights Reserved.

tone circuit by restoring all the tones and using the single-tone solution as its initial guess; it is recommended for multi-tone simulation with a strong first tone.

`hbhomotopy=inctone`: Simulator first solves a single tone, then turns on moderate tones incrementally till all tones are enabled. It is recommended for circuits with one strong large tone.

`hbhomotopy=gsweep`: A resistor, whose conductance is g, is connected with each node, and the sweep of g is controlled by gstart, gstop, and glog. It is recommended for circuits containing high-impedance or quasi-floating nodes.

Parameter Index

In the following index, the number corresponding to each parameter name indicates where to find the description of that parameter:

annotate 76
annotateic 77
autofund 3
autoharms 5
autosteady 8
autotstab 7
backoff 105
backtracking 71
checkpss 38
circuitage 81
cmin 21
dev 124
krylov_size 73
lowmem 75
lsspdatafmt 116
lsspdatatype 117
lsspfile 115
lsspharms 114
lsspports 113
lteminstep 44
lteratio 43
max_innerkrylov_size 47
max_outerkrylov_size 48
maxacfreq 13
pinnode 59
pinnodemag 62
pinnodeminus 60
pinnoderank 61
ppv 88
psaratio 53
readic 17
readns 20
readpss 37
recover 87
relref 42
restart 80
tstabenvlp 10
tstabmethod 40
tstart 9
tunedev 108
tunelin 111
tuneparam 107
tunerange 109
tunestep 110
tunevalues 112
useprevic 19
write 33
writefinal 34

© 2003-2020 All Rights Reserved.

envlpname 11
errpreset 41
excludeconvgwithBK 72
fdharms 56
finitediff 51
flexbalance 58
fullpssvec 55
fund 2
glog 70
gstart 68
gstop 69
harmonicbalance 57
harms 4
harmsvec 22
hbhomotopy 66
hbprecond_solver 74
highorder 52
ic 15
maxiters 79
maxorder 54
maxperiods 46
maxstep 12
memoryestimate 106
method 39
mod 123
nestlvl 25
oppoint 26
oscic 18
oscmethod 65
outputtype 23
oversample 64
oversamplefactor 63
param 118
param_file 121
param_step 125
param_vec 120
save 24
saveclock 84
savefile 86
saveinit 32
saveperiod 82
saveperiodhistory 83
savetime 85
skipcount 29
skipdc 16
skipstart 27
skipstop 28
steadyratio 45
step 14
strobedelay 31
strobeperiod 30
sub 122
sweepic 67
writepss 36
xdbcompression 89
xdbcpi 104
xdbgain 91
xdbharm 98
xdblevel 90
xdbload 94
xdbmax 100
xdbnoden 96
xdbnodep 95
xdbrapid 103
xdbref 92
xdbrefnode 97
xdbsource 93
xdbstart 101
xdbsteps 99
xdbtol 102

© 2003-2020
All Rights Reserved.

```
inexactNewton  50   paramset  119      title  78

itres  49           period  1          tstab  6
```


© 2003-2020 All Rights Reserved.

Periodic STB Analysis (pstb)

Description

The periodic STB (PSTB) analysis is used to evaluate the local stability of a periodically varying feedback circuit. It is a small-signal analysis like STB analysis, except that the circuit is first linearized about a periodically varying operating point as opposed to a simple DC operating point. Linearizing about a periodically time-varying operating point allows the stability evaluation to include the effect of the time-varying operating point.

Evaluating the stability of a periodically varying circuit is a two-step process. In the first step, the small stimulus is ignored and PSS analysis is used to compute the periodic steady-state response of the circuit to a possibly large periodic stimulus. As part of the PSS analysis, the periodically time-varying representation of the circuit is computed and saved for later use. In the second step, a probe is used to compute the loop gain of the zero sideband. The local stability can be evaluated using gain margin, phase margin, or a Nyquist plot of the loop gain. To perform PSTB analysis, a probe instance must be specified as `probe` parameter.

The loop-based algorithm requires that a `probe` be placed on the feedback loop to identify and characterize the particular loop of interest. The introduction of the probe component should not change any of the circuit characteristics. For the time-varying property of the circuit, the loop gain at different places can be different, but all values can be used to evaluate the stability. The loop-based algorithm provides stability information for single-loop circuits and for multi-loop circuits in which a `probe` component can be placed on a critical wire to break all loops. For a typical multi-loop circuit, such a critical wire may not be available. The loop-based algorithm can be used only on individual feedback loops to ensure that they are stable.

The device based algorithm requires the `probe` be a gain instant, such as a bjt transistor or a mos transistor. The device-based algorithm evaluates the loop gain around the `probe`, which can be involved in multi-loops.

Unlike other analyses in Spectre, this analysis can only sweep frequency.

For information on how to run PSTB analysis from ADE, see *Periodic Stability Analysis (PSTB)* in the *Spectre Circuit Simulator and Accelerated Parallel Siumulator RF Analysis User Guide*.

Definition

```
Name pstb parameter=value ...
```


© 2003-2020 All Rights Reserved.

Parameters

Sweep interval parameters

1	`start=0`	Start sweep limit.
2	`stop`	Stop sweep limit.
3	`center`	Center of sweep.
4	`span=0`	Sweep limit span.
5	`step`	Step size, linear sweep.
6	`lin=50`	Number of steps, linear sweep.
7	`dec`	Points per decade.
8	`log=50`	Number of steps, log sweep.
9	`values=[...]`	Array of sweep values.
10	`valuesfile`	Name of the file containing the sweep values.

Probe parameters

11	`probe`	Probe instance around which the loop gain is calculated.
12	`localgnd`	Node name of local ground. If not specified, the probe is referenced to global ground.

Output parameters

13	`save`	Signals to output. Possible values are `all`, `lvl`, `allpub`, `lvlpub`, `selected`, `none`, and `nooutput`.
14	`nestlvl`	Levels of subcircuits to output.

© 2003-2020 All Rights Reserved.

Convergence parameters

15	`tolerance`	Relative tolerance for shooting-based linear solver. The default value is `1.0e-9`.
16	`relativeTol`	Relative tolerance for harmonic balance-based linear solver. The default value is `1.0e-2`.
17	`gear_order=2`	Gear order used for small-signal integration.
18	`solver=turbo`	Solver type. Possible values are `std`, `turbo`, `std_hh`, and `turbo_hh`.
19	`oscsolver=turbo`	Oscillator solver type. It is recommended that you use ira for huge circuits. Possible values are `std`, `turbo`, `ira`, and `direct`.
20	`resgmrescycle=short`	Restarts GMRES cycle. Possible values are `instant`, `short`, `long`, `recycleinstant`, `recycleshort`, `custom`, and `recyclelong`.
21	`hbprecond_solver=autoset`	Select a linear solver for the GMRES preconditioner. Default is autoset. With autoset, the simulator will automatically select the appropriate preconditioner. The preconditioner affects the rate of convergence of the linear matrix solver used in periodic small-signal analysis. When autoset is selected, the simulator may decide to switch to a different preconditioner after the analysis begins. When that happens, the simulator may issue a warning instructing you to choose a different preconditioner during subsequent runs. Although not required, choosing a different preconditioner according to the simulator's instructions may speed up subsequent analyses. Possible values are `basicsolver`, `blocksolver`, `autoset` ,`blockdense`, and `blocksolver2`.
22	`lowmem=0`	Harmonic balance low memory mode. Possible values are `0`, `1`, or number (>=10). The default value is `0`, it indicates that the low memory mode is turned off; if `1` is set, the standard low memory mode is turned on; If a number greater that or equal to `10` is set, Spectre interprets the value as memory requested in Gigabytes.

© 2003-2020 All Rights Reserved.

23	`krylov_size=200`	The maximum iteration count of the linear matrix solver used in periodic small-signal analysis. After reaching `1.25*krylov_size` iterations, the iteration is forced to terminate because of the poor rate of convergence. Increase krylov_size if the simulation reports insufficient norm reduction errors in GMRES.
24	`osc_version=dts`	Specifies the method to use in small signal analysis for autonomous circuits. Possible values are `floquet`, `augmented`, and `dts`.
25	`osc_accuracy=1`	Accuracy control in small signal analysis for autonomous circuits, when `osc_version=dts`. The higher this value, the more iterations GMRES solver will take. Maximum effective value is 5.

Annotation parameters

26	`annotate=sweep`	Degree of annotation. Possible values are `no`, `title`, `sweep`, `status`, `steps`, and `detailed_hb`.
27	`title`	Analysis title.

You can define sweep limits by specifying the end points or by providing the center value and span of the sweep. Steps can be linear or logarithmic, and you can specify the number of steps or the size of each step. In addition, you can specify a step size parameter (`step`, `lin`, `log`, or `dec`) to determine whether the sweep is linear or logarithmic. If you do not specify a step size parameter, the sweep is linear when the ratio of stop to start values is less than 10 and logarithmic when this ratio is 10 or greater. Alternatively, you may specify the values that the sweep parameter should take by using the `values` parameter. If you specify both a specific set of values and a set specified using a sweep range, the two sets are merged and collated before being used. All frequencies are in Hertz.

Parameter Index

In the following index, the number corresponding to each parameter name indicates where to find the description of that parameter:

`annotate 26` `localgnd 12` `probe 11` `step 5`

© 2003-2020 All Rights Reserved.

center 3
dec 7
gear_order 17
hbprecond_solver 21
krylov_size 23
lin 6
log 8
lowmem 22
nestlvl 14
osc_accuracy 25
osc_version 24
oscsolver 19
relativeTol 16
resgmrescycle 20
save 13
solver 18
span 4
start 1
stop 2
title 27
tolerance 15
values 9
valuesfile 10

© 2003-2020
All Rights Reserved.

Periodic Transfer Function Analysis (pxf)

Description

A conventional transfer function analysis computes the transfer function from every source in the circuit to a single output. Unlike a conventional AC analysis that computes the response from a single stimulus to every node in the circuit, the Periodic Transfer Function or PXF analysis computes the transfer functions from any source at any frequency to a single output at a single frequency. Thus, like PAC analysis, PXF analysis includes frequency conversion effects.

The PXF analysis directly computes such useful quantities as conversion efficiency (transfer function from input to output at required frequency), image and sideband rejection (input to output at undesired frequency), and LO feed-through and power supply rejection (undesired input to output at all frequencies).

As with a PAC, PSP, and PNoise analyses, a PXF analysis must follow a PSS analysis.

Unlike other analyses in Spectre, this analysis can only sweep frequency.

For information on how to run PXF analysis from ADE, see *Periodic Transfer Function Analysis (PXF)* in the *Spectre Circuit Simulator and Accelerated Parallel Siumulator RF Analysis User Guide*.

Definition

```
Name  [p]  [n] ... pxf parameter=value ...
```

The optional terminals (p and n) specify the output of the circuit. If you do not specify the terminals, you must specify the output with a probe component.

Parameters

Sweep interval parameters

1	`start=0`	Start sweep limit.
2	`stop`	Stop sweep limit.
3	`center`	Center of sweep.

© 2003-2020 All Rights Reserved.

4	`span=0`	Sweep limit span.
5	`step`	Step size, linear sweep.
6	`lin=50`	Number of steps, linear sweep.
7	`dec`	Points per decade.
8	`log=50`	Number of steps, log sweep.
9	`values=[...]`	Array of sweep values.
10	`valuesfile`	Name of the file containing the sweep values.
11	`sweeptype=unspecified`	Specifies if the sweep frequency range is the absolute frequency of input or if it is relative to the port harmonics. When the unspecified value is used, Spectre RF sweeps using relative when autonomous simulation is performed or when the analysis is PSP; for other cases Spectre RF sweeps the absolute value of the input. Possible values are `absolute`, `relative`, and `unspecified`.
12	`relharmnum=1`	Harmonic to which relative frequency sweep should be referenced.

Probe parameters

13	`probe`	Compute every transfer function to this probe component.

Sampled analysis parameters

14	`ptvtype=timeaveraged`	Specifies if the PTV analysis will be traditional or sampled under certain conditions. Possible values are `timeaveraged` and `sampled`.
15	`sampleprobe`	The crossing event at this port triggers the sampled small signal computation.
16	`thresholdvalue=0`	Sampled measurement is done when the signal crosses this value.

© 2003-2020 All Rights Reserved.

17	`crossingdirection=all`	Specifies the transitions for which sampling must be done. Possible values are `all`, `rise`, `fall`, and `ignore`.
18	`maxsamples=16`	Maximum number of sampled events to be processed during the sampled analysis.
19	`extrasampletimepoints=[...]`	Additional time points for sampled PTV analysis.
20	`sampleratio=1`	The multiple times of fund frequency that sample frequency divides into.

Jitter parameters

21	`externalsources`	Pairs of terminals or nodes corresponding to external jitter sources.
22	`extcorrsources1`	Pairs of terminals and nodes for the first group of correlated external jitter sources.
23	`extcorrsources2`	Pairs of terminals and nodes for the second group of correlated external jitter sources.
24	`deterministicsources`	Pairs of terminals or nodes corresponding to deterministic jitter sources.
25	`determsourcesfreqs`	Frequency list corresponding to the external deterministic jitter sources.

Output parameters

26	`stimuli=sources`	Stimuli used for pxf analysis. Possible values are `sources` and `nodes_and_terminals`.
27	`sidebands=[...]`	Array of relevant sidebands for the analysis.

© 2003-2020 All Rights Reserved.

28	`maxsideband=7`	An alternative to the `sidebands` array specification, which automatically generates the array: `[ -maxsideband ... 0 ... +maxsideband ]`. For shooting analysis, the default value is `7`. For HB small signal analysis, the default value is the `harms/maxharms` setting in the HB large signal analysis. It is ignored in HB small signal when it is larger than the harms/maxharms value of large signal.
29	`freqaxis`	Specifies whether the results should be printed as per the input frequency, the output frequency, or the absolute value of the input frequency. Default is `absin`. Possible values are `absin`, `in`, and `out`.
30	`save`	Signals to output. Possible values are `all`, `lvl`, `allpub`, `lvlpub`, `selected`, `none`, and `nooutput`.
31	`nestlvl`	Levels of subcircuits to output.

Convergence parameters

32	`tolerance`	Tolerance for the linear solver. The default value is 1.0e-9 for shooting-based solver, and 1.0e-4 for harmonic balance-based solver.
33	`relativeTol`	Relative tolerance for harmonic balance-based linear solver. The default value is `1.0e-2`.
34	`gear_order=2`	Gear order used for small-signal integration.
35	`solver=turbo`	Solver type. Possible values are `std`, `turbo`, `std_hh`, and `turbo_hh`.
36	`oscsolver=turbo`	Oscillator solver type. It is recommended that you use ira for huge circuits. Possible values are `std`, `turbo`, `ira`, and `direct`.
37	`resgmrescycle=short`	Restarts GMRES cycle. Possible values are `instant`, `short`, `long`, `recycleinstant`, `recycleshort`, `custom`, and `recyclelong`.

© 2003-2020 All Rights Reserved.

38	`hbprecond_solver=autoset`	Select a linear solver for the GMRES preconditioner. Default is autoset. With autoset, the simulator will automatically select the appropriate preconditioner. The preconditioner affects the rate of convergence of the linear matrix solver used in periodic small-signal analysis. When autoset is selected, the simulator may decide to switch to a different preconditioner after the analysis begins. When that happens, the simulator may issue a warning instructing you to choose a different preconditioner during subsequent runs. Although not required, choosing a different preconditioner according to the simulator's instructions may speed up subsequent analyses. Possible values are `basicsolver`, `blocksolver`, `autoset`, `blockdense`, `blocksolver2`, and `blocksolver2`.
39	`lowmem=0`	Harmonic balance low memory mode. Possible values are `0`, `1`, or number (>=10). The default value is `0`, it indicates that the low memory mode is turned off; if `1` is set, the standard low memory mode is turned on; If a number greater that or equal to `10` is set, Spectre interprets the value as memory requested in Gigabytes.
40	`krylov_size=200`	The maximum iteration count of the linear matrix solver used in periodic small-signal analysis. After reaching `1.25*krylov_size` iterations, the iteration is forced to terminate because of the poor rate of convergence. Increase krylov_size if the simulation reports insufficient norm reduction errors in GMRES.
41	`osc_version=dts`	Specifies the method to use in small signal analysis for autonomous circuits. Possible values are `floquet`, `augmented`, and `dts`.
42	`osc_accuracy=1`	Accuracy control in small signal analysis for autonomous circuits, when `osc_version=dts`. The higher this value, the more iterations GMRES solver will take. Maximum effective value is 5.
43	`freqdivide=1`	Large signal frequency division. Used for oscillator circuit with divider when `osc_version=dts` for shooting engine.

© 2003-2020 All Rights Reserved.

Annotation parameters

44	`annotate=sweep`	Degree of annotation. Possible values are `no`, `title`, `sweep`, `status`, `steps`, and `detailed_hb`.
45	`title`	Analysis title.

Modulation conversion parameters

46	`modulated=no`	Compute transfer functions/conversion between modulated sources and outputs. Possible values are `single`, `first`, `second`, and `no`.
47	`outmodharmnum=1`	Harmonic for the PXF output modulation.
48	`inmodharmvec=[...]`	Harmonic list for the PXF modulated sources.
49	`moduppersideband=1`	Index of the upper sideband included in the modulation of an output for PAC or an input for PXF.

The variable of interest at the output can be voltage or current, and its frequency is not constrained by the period of the large periodic solution. While sweeping the selected output frequency, you can select the periodic small-signal input frequencies of interest by setting either the `maxsideband` or the `sidebands` parameter. For a given set of n integer numbers representing the sidebands `K1, K2, ... Kn`, the input signal frequency at each sideband is computed as `f(in)= f(out) + Ki * fund(pss)`, where, `f(out)` represents the (possibly swept) output signal frequency and fund(pss) represents the fundamental frequency used in the corresponding PSS analysis. Thus, when analyzing a down-converting mixer and sweeping the IF output frequency, `Ki= +1` for the RF input represents the first upper-sideband, while Ki= -1 for the RF input represents the first lower-sideband. By setting the `maxsideband` value to Kmax, all 2 * Kmax + 1 sidebands from -Kmax to +Kmax are selected.

The number of requested sidebands does not change substantially the simulation time. However, the `maxacfreq` of the corresponding PSS analysis should be set to guarantee that | max{f(in)} | is less than `maxacfreq`; otherwise, the computed solution might be contaminated by aliasing effects. The PXF simulation is not executed for | f(out) | greater than `maxacfreq`. Diagnostic messages are printed for those extreme cases, indicating how `maxacfreq` should be set in the PSS analysis. In majority of simulations, however, this is not an issue, because `maxacfreq` is never allowed to be smaller than 40x the PSS fundamental.

© 2003-2020 All Rights Reserved.

With PXF, the frequency of the stimulus and of the response are usually different (this is an important area in which PXF differs from XF). The `freqaxis` parameter is used to specify whether the results should be output versus the input frequency (`in`), the output frequency (`out`), or the absolute value of the input frequency (`absin`).

You can specify the output with a pair of nodes or a probe component. Any component with two or more terminals can be a voltage probe. When there are more than two terminals, they are grouped in pairs, and you use the `portv` parameter to select the appropriate pair of terminals. Alternatively, you can specify a voltage to be the output by giving a pair of nodes on the PXF analysis statement.

Any component that naturally computes current as an internal variable can be a current probe. If the probe component computes more than one current, you use the `porti` parameter to select the appropriate current. It is an error to specify both `portv` and `porti`. If neither is specified, the probe component provides a reasonable default.

The `stimuli` parameter specifies the inputs for the transfer functions. There are two choices. `stimuli=sources` indicates that the sources present in the circuit should be used. The `xfmag` parameters provided by the sources may be used to adjust the computed gain to compensate for gains or losses in a test fixture. One can limit the number of sources in hierarchical netlists by using the `save` and `nestlvl` parameters. `stimuli=nodes_and_terminals` indicates that all possible transfer functions should be computed.

This is useful when it is not known in advance which transfer functions are interesting. Transfer functions for nodes are computed assuming that a unit magnitude flow (current) source is connected from the node to ground. Transfer functions for terminals are computed assuming that a unit magnitude value (voltage) source is connected in series with the terminal. By default, the transfer functions from a small set of terminals are computed. If transfer functions from specific terminals are required, specify the terminals in the save statement. You must use the `:probe` modifier (for example, Rout:1:probe) or specify `useprobes=yes` on the options statement. If transfer functions from all terminals are required, specify `currents=all` and `useprobes=yes` on the options statement.

Modulated small signal measurements are possible by using the Analog Design Environment (ADE) environment. The `modulated` option for PXF and other modulated parameters are set by ADE. PXF analyses with this option produce results that could have limited use outside such an environment. Direct Plot is configured to analyze these results and combine several wave forms to measure AM and PM transfer function from single sideband or modulated stimuli to the specified output. For details, see Spectre RF User Guide.

You can define sweep limits by specifying the end points or by providing the center value and span of the sweep. Steps can be linear or logarithmic, and you can specify the number of steps or the size of each step. In addition, you can specify a step size parameter (`step`, `lin`,

© 2003-2020 All Rights Reserved.

log, or dec) to determine whether the sweep is linear or logarithmic. If you do not specify a step size parameter, the sweep is linear when the ratio of stop to start values is less than 10 and logarithmic when this ratio is 10 or greater. Alternatively, you may specify the values that the sweep parameter should take by using the values parameter. If you specify both a specific set of values and a set specified using a sweep range, the two sets are merged and collated before being used. All frequencies are in Hertz.

Parameter Index

In the following index, the number corresponding to each parameter name indicates where to find the description of that parameter:

annotate 44
center 3
crossingdirection 17
dec 7
deterministicsources 24
determsourcesfreqs 25
extcorrsources1 22
extcorrsources2 23
externalsources 21
extrasampletimepoints 19
freqaxis 29
hbprecond_solver 38
inmodharmvec 48
krylov_size 40
lin 6
log 8
lowmem 39
maxsamples 18
maxsideband 28
modulated 46
moduppersideband 49
nestlvl 31
oscsolver 36
outmodharmnum 47
probe 13
ptvtype 14
relativeTol 33
relharmnum 12
resgmrescycle 37
sampleprobe 15
sampleratio 20
save 30
sidebands 27
start 1
step 5
stimuli 26
stop 2
sweeptype 11
thresholdvalue 16
title 45
tolerance 32
values 9
valuesfile 10

© 2003-2020 All Rights Reserved.

freqdivide 43 osc_accuracy 42 solver 35

gear_order 34 osc_version 41 span 4

© 2003-2020 All Rights Reserved.

PZ Analysis (pz)

Description

The PZ analysis linearizes the circuit about the DC operating point and computes the poles and zeros of the linearized network. To compute zeros, you need to specify input sources and output voltages or currents. If no input or output is given, only poles are computed. If there are frequency-dependent components, poles and zeros are computed by approximating those components as equivalent conductances and capacitances evaluated at 1Hz. The PZ analysis uses the default direct solver (method=qz) for better accuracy. Performance is better on small-to-medium sized circuits. For larger circuits, a Krylov subspace iterative solver (method=arnoldi) can be used for better performance, but, with lesser accuracy.

Note: A frequency-dependent component means that the capacitance or conductance-equivalent representation of the component varies with the frequency. Examples are transmission lines or bjts with excess phases. A linear capacitor is not a frequency-dependent component.

Spectre can perform the analysis while sweeping a parameter. The parameter can be temperature, component instance parameter, component model parameter, or netlist parameter. If changing a parameter affects the DC operating point, the operating point is recomputed at each step. You can sweep the parameter `temp` or a netlist parameter by specifying the parameter name without a `dev` or `mod` parameter. After the analysis is complete, the modified parameter returns to its original value.

Pole-zero cancellation is performed when a neighboring pole-zero pair is located within `absdiff` distance. The distance is also determined relatively as `reldiff` times the magnitude of the pole or zero. Spectre uses the larger value of the two distances for cancellation. By default, a lower bound of resistance is enforced. You may remove this limitation by defining the resistor parameter `rac`. This may affect pz results.

For additional information on pz analysis, see *Pole Zero Analysis* in the *Spectre Circuit Simulator and Accelerated Parallel Simulator User Guide*.

Definition

```
Name ... pz parameter=value ...
```

Parameters

© 2003-2020 All Rights Reserved.

Probe parameters

1	`iprobe`	Input probe for zeros of the transfer function.
2	`oprobe`	Output probe for zeros of the transfer function.

Port parameters

3	`portv`	Voltage across the specified oprobe port is the output of the analysis.
4	`porti`	Current through the specified oprobe port is the output of the analysis. Should be used when oprobe is a voltage source or a current probe.

Sweep interval parameters

5	`start=0`	Start sweep limit.
6	`stop`	Stop sweep limit.
7	`center`	Center of sweep.
8	`span=0`	Sweep limit span.
9	`step`	Step size, linear sweep.
10	`lin=50`	Number of steps, linear sweep.
11	`dec`	Points per decade.
12	`log=50`	Number of steps, log sweep.
13	`values=[...]`	Array of sweep values.
14	`valuesfile`	Name of the file containing the sweep values.

Sweep variable parameters

15	`dev`	Device instance whose parameter value is to be swept.
16	`mod`	Model whose parameter value is to be swept.

© 2003-2020 All Rights Reserved.

17	`param`	Name of parameter to sweep.
18	`freq (Hz)`	Frequency at which components will be evaluated in setting up the linearized network.

State-file parameters

19	`readns`	File that contains estimate of DC solution (nodeset).
20	`useprevic=no`	If set to `yes` or `ns`, use the converged initial condition from previous analysis as ic or ns. Possible values are `no`, `yes` and `ns`.

Output parameters

21	`oppoint=no`	Should operating point information be computed, and if so, where should it be sent. Possible values are `no`, `screen`, `logfile`, and `rawfile`.
22	`zeroonly=no`	If set, only zeros are requested. Possible values are `no` and `yes`.

Filtering parameters

23	`fmax (Hz)`	Maximum pole and zero frequency value to filter out spurious poles and zeros. This parameter is passed to psf outputs for plotting filtering.
24	`docancel=yes`	If set, pole-zero cancellation is requested. Possible values are `no` and `yes`.
25	`absdiff=1e-6 Hz`	Pole-Zero cancel absolute distance in Hz.
26	`reldiff=1e-4`	Pole-Zero cancel relative distance.

© 2003-2020 All Rights Reserved.

Convergence parameters

27	`prevoppoint=no`	Use the operating point computed on the previous analysis. Possible values are `no` and `yes`.
28	`restart=yes`	Restart the DC solution from scratch if any condition has changed. If not, use the previous solution as initial guess. Possible values are `no` and `yes`.

Annotation parameters

29	`annotate=sweep`	Degree of annotation. Possible values are `no`, `title`, `sweep`, `status`, and `steps`.
30	`title`	Analysis title.

Miscellaneous parameters

31	`method=qz`	Method to perform pz analysis. Possible values are `qz` and `arnoldi`.
32	`pole_emphasis=lowfreq`	If set to `lowfreq`, calculate low-frequency poles accurately. If set to `highfreq`, calculate high-frequency poles accurately
33	`numpoles`	Maximum number of poles requested, only for arnoldi method.
34	`numzeros`	Maximum number of zeros requested, only for arnoldi method.
35	`sigmar=0.1`	Root finding control parameter; only for arnoldi method.
36	`sigmai=0.0`	Root finding control parameter; only for arnoldi method.

Examples

```
mypz pz
```

Pole analysis is performed.

© 2003-2020 All Rights Reserved.

```
mypz2  (n1 n2) pz iprobe=VIN
```

Input is VIN and output is the voltage difference between nodes n1 and n2. Both pole and zero analyses are performed.

```
mypz3 (n1 n2) pz iprobe=I1
```

Input is I1, output is voltage difference between n1 and n2. Both pole and zero analyses will be performed.

```
mypz4 pz iprobe=VIN oprobe=IP1 porti=1
```

Input is VIN, output is current through IP1, where IP1 is an iprobe. Both pole and zero analyses will be performed.

```
mypz5 pz iprobe=VIN oprobe=V3 porti=1
```

Input is VIN, output is current through voltage source V3. Both pole and zero analyses will be performed.

```
mypz6 pz iprobe=VIN oprobe=R3 portv=1
```

Input is VIN, output is the voltage across the resistor R3. Both pole and zero analyses will be performed.

```
mypz7 (n1 n2) pz iprobe=I1 param=temp start=25 stop=100 step=25
```

Sweep temperature from 25 C to 100 C with increment of 25 C.

```
parameters rval=2.0
 R2 3 4 resistor r=rval
 ...
 sweep1 sweep param=rval start=1 stop=10 step=1 {
    mypz8 (n1 n2) iprobe=VIN
 }
```

External sweep parameter rval from 1 to 10 with increment of 1.

```
mypz9 (n1 n2) pz iprobe=VIN docancel=no
```

Do not perform pole-zero cancellation.

Note: `porti` allows you to select a current associated with a specific device given in oprobe as an output. This device, however, has to have its terminal currents as network variables. Therefore, to avoid confusion, porti should be used exclusively with voltage sources and current probes and with other components that have voltage-defined branches.

When PZ analysis finishes, a table is printed by default. The table includes values of poles/zeros and a brief notification on the "right-hand side poles", if there are any. This information can also be viewed graphically. In addition to the direct results, "DC gain" is also listed at the end. It calculates the gain of transfer function H(s) given s=0, including the contribution of the

© 2003-2020 All Rights Reserved.

excluded poles/zeros (blocked by user-specified `fmax`). "Constant factor" calculates the ratio of the coefficients of the leading terms in the numerator and denominator of H(s).

Parameter Index

In the following index, the number corresponding to each parameter name indicates where to find the description of that parameter:

absdiff 25	lin 10	pole_emphasis 32	span 8
annotate 29	log 12	porti 4	start 5
center 7	method 31	portv 3	step 9
dec 11	mod 16	prevoppoint 27	stop 6
dev 15	numpoles 33	readns 19	title 30
docancel 24	numzeros 34	reldiff 26	useprevic 20
fmax 23	oppoint 21	restart 28	values 13
freq 18	oprobe 2	sigmai 36	valuesfile 14
iprobe 1	param 17	sigmar 35	zeroonly 22

© 2003-2020 All Rights Reserved.

Quasi-Periodic AC Analysis (qpac)

Description

The quasi periodic AC (QPAC) analysis is used to compute transfer functions for circuits that exhibit multitone frequency translation. Such circuits include mixers, switched-capacitor filters, samplers, phase-locked loops, and the like. It is a small-signal analysis like AC analysis, except that the circuit is first linearized about a quasi-periodically varying operating point, as opposed to a simple DC operating point. Linearizing about a quasi-periodically time-varying operating point allows transfer-functions that include frequency translation, whereas linearizing about a DC operating point could not because linear time-invariant circuits do not exhibit frequency translation. In addition, the frequency of the sinusoidal stimulus is not constrained by the period of the large periodic solution.

Computing the small-signal response of a quasi-periodically varying circuit is a two-step process. First, the small stimulus is ignored and the quasi-periodic steady-state response of the circuit to possibly large periodic stimuli is computed using QPSS analysis. As part of the QPSS analysis, the quasi-periodically time-varying representation of the circuit is computed and saved for later use. The second step is to apply the small stimulus to the periodically varying linear representation to compute the small signal response. This is done using the QPAC analysis.

A QPAC analysis cannot be used independently; it must follow a QPSS analysis. However, any number of quasi-periodic small-signal analyses, such as QPAC, QPSP, QPXF, QPNOISE, can follow a QPSS analysis.

For information on how to run QPAC analysis from ADE, see *Quasi Periodic AC Analysis (QPAC)* in the *Spectre Circuit Simulator and Accelerated Parallel Simulator RF Analysis User Guide*.

Unlike other analyses in Spectre, this analysis can only sweep frequency.

Definition

```
Name qpac parameter=value ...
```

Parameters

© 2003-2020 All Rights Reserved.

Sweep interval parameters

1	`start=0`	Start sweep limit.
2	`stop`	Stop sweep limit.
3	`center`	Center of sweep.
4	`span=0`	Sweep limit span.
5	`step`	Step size, linear sweep.
6	`lin=50`	Number of steps, linear sweep.
7	`dec`	Points per decade.
8	`log=50`	Number of steps, log sweep.
9	`values=[...]`	Array of sweep values.
10	`valuesfile`	Name of the file containing the sweep values.
11	`sweeptype`	Specifies if the sweep frequency range is an absolute frequency, that is, the actual frequency, or if it is relative to the "relharmvec" sideband frequency. Possible values are `absolute` and `relative`.
12	`relharmvec=[...]`	Sideband- vector of QPSS harmonics- to which relative frequency sweep should be referenced.

Output parameters

13	`sidevec=[...]`	Array of relevant sidebands for the analysis.
14	`clockmaxharm=7`	An alternative to the `sidevec` array specification, which automatically generates the array: [-clockmaxharm ... 0 ... +clockmaxharms][-maxharms(QPSS)[2]...0...maxharms(QPSS)[2]][...].
15	`freqaxis`	Specifies whether the results should be printed as the input frequency, the output frequency, or the absolute value of the output frequency. The default is `absout`. Possible values are `absout`, `out`, and `in`.
16	`save`	Signals to output. Possible values are `all`, `lvl`, `allpub`, `lvlpub`, `selected`, `none`, and `nooutput`.
17	`nestlvl`	Levels of subcircuits to output.

© 2003-2020 All Rights Reserved.

Convergence parameters

18	`tolerance`	Relative tolerance for linear solver; the default value is 1.0e-9 for shooting-based solver and 1.0e-4 for harmonic balance-based solver.
19	`relativeTol`	Relative tolerance for harmonicbalance-based linear solver; the default value is 1.0e-2.
20	`gear_order=2`	Gear order used for small-signal integration, 1 or 2.
21	`solver=turbo`	Solver type. Possible values are `std` and `turbo`.
22	`resgmrescycle=short`	Restarts GMRES cycle. Possible values are `instant`, `short`, `long`, `recycleinstant`, `recycleshort`, `custom`, and `recyclelong`.
23	`hbprecond_solver=autoset`	Select a linear solver for the GMRES preconditioner. Default is autoset. With autoset, the simulator will automatically select the appropriate preconditioner. The preconditioner affects the rate of convergence of the linear matrix solver used in periodic small-signal analysis. When autoset is selected, the simulator may decide to switch to a different preconditioner after the analysis begins. When that happens, the simulator may issue a warning instructing you to choose a different preconditioner during subsequent runs. Although not required, choosing a different preconditioner according to the simulator's instructions may speed up subsequent analyses. Possible values are `basicsolver`, `blocksolver`, `autoset`, `blockdense`, and `blocksolver2`.
24	`lowmem=0`	Harmonic balance low memory mode. Possible values are `0`, `1`, or number (>=10). The default value is `0`, it indicates that the low memory mode is turned off; if `1` is set, the standard low memory mode is turned on; If a number greater that or equal to `10` is set, Spectre interprets the value as memory requested in Gigabytes.
25	`krylov_size=200`	The maximum iteration count of the linear matrix solver used in periodic small-signal analysis. After reaching `1.25*krylov_size` iterations, the iteration is forced to terminate because of the poor rate of convergence. Increase krylov_size if the simulation reports insufficient norm reduction errors in GMRES.

© 2003-2020 All Rights Reserved.

Annotation parameters

26	`annotate=sweep`	Degree of annotation. Possible values are `no`, `title`, `sweep`, `status`, `steps`, and `detailed_hb`.
27	`title`	Analysis title.

You can select the set of periodic small-signal output frequencies of interest by setting either the `clockmaxharm` or the `sidevec` parameter. Sidebands are vectors in QPAC. Assuming that there is one large tone and one moderate tone in QPSS, a sideband K1 is represented as [K1_1 K1_2]. Corresponding frequency is as follows:

`K1_1 * fund(large tone of QPSS) + K1_2 * fund` (moderate tone of QPSS)

If there are L large and moderate tones in QPSS analysis and a given set of n integer vectors representing the sidebands

`K1 = { K1_1,...K1_j..., K1_L} , K2, ... Kn,` the output frequency at each sideband is computed as follows:

```
f(out)= f(in) + SUM_j=1_to_L{Ki_j * fund_j(qpss)},
```

where, `f(in)` represents the (possibly swept) input frequency, and fund_j(qpss) represents the fundamental frequency used in the corresponding QPSS analysis. Thus, when analyzing a down-converting mixer while sweeping the RF input frequency, the most relevant sideband for IF output is { -1, 0} . When simulating an up-converting mixer while sweeping IF input frequency, the most relevant sideband for RF output is { 1, 0}. You would enter `sidevec` as a sequence of integer numbers, separated by spaces. The set of vectors {1 1 0} {1 -1 0} {1 1 1} becomes sidevec=[1 1 0 1 -1 0 1 1 1]. For `clockmaxharm`, only the large tone- the first fundamental is affected by this entry; the rest- moderate tones- are limited by `maxharms`, specified for a QPSS analysis. Given maxharms=[k1max k2max ... knmax] in QPSS and `clockmaxharm=Kmax all (2*Kmax + 1)*(2*k2max+1)*(2*k3max+1)*...*(2*knmax+1)` sidebands are generated.

The number of requested sidebands changes substantially the simulation time.

With QPAC, the frequency of the stimulus and of the response are usually different (this is an important area in which QPAC differs from AC). The `freqaxis` parameter is used to specify whether the results should be output versus the input frequency (`in`), the output frequency (`out`), or the absolute value of the output frequency (`absout`).

You can specify sweep limits by specifying the end points or the center value and span of the sweep. Steps can be linear or logarithmic, and you can specify the number of steps or the size of each step. You can specify a step size parameter (`step`, `lin`, `log`, or `dec`) to

© 2003-2020 All Rights Reserved.

determine whether the sweep is linear or logarithmic. If you do not specify a step size parameter, the sweep is linear when the ratio of stop to start values is less than 10 and logarithmic when this ratio is 10 or greater. Alternatively, you may specify the values that the sweep parameter should take using the `values` parameter. If you specify both a specific set of values and a set specified using a sweep range, the two sets are merged and collated before being used. All frequencies are in Hertz.

Parameter Index

In the following index, the number corresponding to each parameter name indicates where to find the description of that parameter:

annotate 26
center 3
clockmaxharm 14
dec 7
freqaxis 15
gear_order 20
hbprecond_solver 23
krylov_size 25
lin 6
log 8
lowmem 24
nestlvl 17
relativeTol 19
relharmvec 12
resgmrescycle 22
save 16
sidevec 13
solver 21
span 4
start 1
step 5
stop 2
sweeptype 11
title 27
tolerance 18
values 9
valuesfile 10

© 2003-2020 All Rights Reserved.

Quasi-Periodic Noise Analysis (qpnoise)

Description

The Quasi-Periodic Noise, or QPNOISE analysis is similar to the conventional noise analysis, except that it includes frequency conversion and intermodulation effects. Hence, it is useful for predicting the noise behavior of mixers, switched-capacitor filters, and other periodically or quasi-periodically driven circuits.

QPNOISE analysis linearizes the circuit about the quasi-periodic operating point computed in the prerequisite QPSS analysis. It is the quasi-periodically time-varying nature of the linearized circuit that accounts for the frequency conversion and intermodulation. The effect of a quasi-periodically time-varying bias point on the noise generated by the various components in the circuit is also included.

The time-average of the noise at the output of the circuit is computed in the form of spectral density versus frequency. The output of the circuit is specified with a pair of nodes or a probe component. To specify the output of a circuit with a probe, specify it using the `oprobe` parameter. If the output is voltage (or potential), choose a `resistor` or a `port` as the output probe. If the output is current (or flow), choose a `vsource` or `iprobe` as the output probe.

If the input-referred noise is required, specify the input source by using the `iprobe` parameter. Currently, only a `vsource`, an `isource`, or a `port` may be used as an input probe. If the input source is noisy, as is a `port`, the noise analysis computes the noise factor (F) and noise figure (NF). To match the IEEE definition of noise figure, the input probe must be a port with no excess noise and its `noisetemp` must be set to 16.85C (290K). In addition, the output load must be a `resistor` or `port` and must be identified as the `oprobe`.

If `port` is specified as the input probe, both input-referred noise and gain are referred back to the equivalent voltage source inside the port. S-parameter analysis calculates those values in traditional sense.

The reference sideband (`refsideband`) specifies which conversion gain is used when computing input-referred noise, noise factor, and noise figure. The reference sideband satisfies:

```
|f(input)| = |f(out) + refsideband frequency shift|.
```

The reference sideband option (refsidebandoption) specifies whether to consider the input at the frequency or at the individual quasi-periodic sideband that is specified.

Note: Different sidebands can lead to the same frequency.

© 2003-2020 All Rights Reserved.

Sidebands are vectors in QPNOISE. Assuming one large tone and one moderate tone in QPSS, a sideband Ki is a vector [Ki_1 Ki_2]. It gives the frequency at :

`Ki_1 * fund(large tone of QPSS) + Ki_2 * fund` (moderate tone of QPSS)

Use `refsideband=[0 0 ...]` when the input and output of the circuit are at the same frequency, such as with amplifiers and filters.

The noise analysis always computes the total noise at the output, which includes contributions from the input source and the output load. The amount of the output noise that is attributable to each noise source in the circuit is also computed and output individually. If the input source is identified (using iprobe) and is a vsource or isource, the input-referred noise is computed, which includes the noise from the input source itself. Finally, if the input source is identified (using iprobe) and is noisy, as is the case with ports, the noise factor and noise figure are computed. Thus, if:

No = total output noise

Ns = noise at the output due to the input probe (the source)

Nsi = noise at the output due to the image harmonic at the source

Nso = noise at the output due to harmonics other than input at the source

Nl = noise at the output due to the output probe (the load)

IRN = input referred noise

G = gain of the circuit

F = noise factor

NF = noise figure

Fdsb = double sideband noise factor

NFdsb = double sideband noise figure

Fieee = IEEE single sideband noise factor

NFieee = IEEE single sideband noise figure

Then:

IRN = sqrt(No^2 / G^2)

© 2003-2020 All Rights Reserved.

F = (No^2 - Nl^2)/Ns^2

NF = 10*log10(F)

Fdsb = (No^2 - Nl^2)/(Ns^2+Nsi^2)

NFdsb = 10*log10(Fdsb)

Fieee = (No^2 - Nl^2 - Nso^2)/Ns^2

NFieee = 10*log10(Fieee).

When the results are output, No is named `out`, IRN is named `in`, G is named `gain`, F, NF, Fdsb, NFdsb, Fieee, and NFieee are named `F`, `NF`, `Fdsb`, `NFdsb`, `Fieee`, and `NFieee`, respectively.

The computation of gain and IRN in QPNOISE assumes that the circuit under test is impedance-matched to the input source. This can introduce inaccuracy into the gain and IRN computation.

Unlike other analyses in Spectre, this analysis can only sweep frequency.

For information on how to run QPnoise analysis from ADE, see *Quasi Periodic Noise Analysis (QPnoise)* in the *Spectre Circuit Simulator and Accelerated Parallel Simulator RF Analysis User Guide*.

Definition

```
Name  [p]  [n] qpnoise parameter=value ...
```

The optional terminals (p and n) specify the output of the circuit. If you do not specify the terminals, you must specify the output with a probe component.

Parameters

Sweep interval parameters

1	`start=0`	Start sweep limit.
2	`stop`	Stop sweep limit.
3	`center`	Center of sweep.

© 2003-2020 All Rights Reserved.

4	`span=0`	Sweep limit span.
5	`step`	Step size, linear sweep.
6	`lin=50`	Number of steps, linear sweep.
7	`dec`	Points per decade.
8	`log=50`	Number of steps, log sweep.
9	`values=[...]`	Array of sweep values.
10	`valuesfile`	Name of the file containing the sweep values.
11	`sweeptype`	Specifies if the sweep frequency range is an absolute frequency, that is, the actual frequency, or if it is relative to the "relharmvec" sideband frequency. Possible values are `absolute` and `relative`.
12	`relharmvec=[...]`	Sideband vector of QPSS harmonics- to which relative frequency sweep should be referenced.

Probe parameters

13	`oprobe`	Compute total noise at the output defined by this component.
14	`iprobe`	Refer the output noise to this component.
15	`refsideband=[...]`	Conversion gain associated with this sideband is used when computing input-referred noise or noise figure.
16	`refsidebandoption=individual`	Whether to view the sideband as a specification of a frequency or a specification of an individual sideband. Possible values are `freq` and `individual`.

© 2003-2020 All Rights Reserved.

Output parameters

17	`clockmaxharm=7`	In shooting pnoise, the parameter determines the maximum sideband included when computing noise that is either up-converted or down-converted to the output by the periodic drive signal. The default value for the shooting pnoise is 7. In HB pnoise, this parameter determines the size of the small signal system when the HB pnoise is performed. This parameter is critical for the accuracy of the HB pnoise analysis; using small maxsideband may cause accuracy loss. The default value for HB pnoise is the `harms/maxharms` setting in the HB large signal analysis.
18	`sidevec=[...]`	Array of relevant sidebands for the analysis.
19	`save`	Signals to output. This option specifies the signals to be saved in the result.Possible values are `all`, `lvl`, `allpub`, `lvlpub`, and `selected`. ■ `allpub`: saves all signals at all levels of hierarchy in the schematic, including the internal signals of device models ■ `all`: works like `allpub` ■ `lvl`: saves all signals through the level of hierarchy set in the `nestlvl` option ■ `lvlpub`: works like `lvl` ■ `selected`: is not recommended to use here.
20	`nestlvl`	Levels of subcircuits to output.
21	`saveallsidebands=no`	Save noise contributors by sideband. Possible values are `no` and `yes`.
22	`noiseout=usb`	Specify noise output. You can set a vector like noiseout=[usb am pm]. And all are using single sideband (SSB) convention, half of the total power. Possible values are `usb`, `lsb`, `am` and `pm`.
23	`separatenoise=no`	Separate Noise into sources and transfer functions. Possible values are `no` and `yes`.

© 2003-2020 All Rights Reserved.

Convergence parameters

24	`tolerance`	Tolerance for the linear solver. The default value is 1.0e-9 for shooting-based solver, and 1.0e-4 for harmonic balance-based solver.
25	`relativeTol`	Relative tolerance for harmonicbalance-based linear solver; the default value is 1.0e-2.
26	`gear_order=2`	Gear order used for small-signal integration, 1 or 2.
27	`solver=turbo`	Solver type. Possible values are `std` and `turbo`.
28	`resgmrescycle=short`	Restarts GMRES cycle. Possible values are `instant`, `short`, `long`, `recycleinstant`, `recycleshort`, `custom`, and `recyclelong`.
29	`hbprecond_solver=autoset`	Select a linear solver for the GMRES preconditioner. Default is autoset. With autoset, the simulator will automatically select the appropriate preconditioner. The preconditioner affects the rate of convergence of the linear matrix solver used in periodic small-signal analysis. At times, when autoset is selected, the simulator may decide to switch to a different preconditioner after the analysis begins. When that happens, the simulator may issue a warning instructing you to choose a different preconditioner during subsequent runs. Although not required, choosing a different preconditioner according to the simulators instructions may speedup subsequent analyses. Possible values are `basicsolver`, `blocksolver`, `autoset`, `blockdense`, and `blocksolver2`.
30	`lowmem=0`	Harmonic balance low memory mode. Possible values are `0`, `1`, or number (>=10). The default value is `0`, it indicates that the low memory mode is turned off; if `1` is set, the standard low memory mode is turned on; If a number greater that or equal to `10` is set, Spectre interprets the value as memory requested in Gigabytes.
31	`krylov_size=200`	The maximum iteration count of the linear matrix solver used in periodic small-signal analysis. After reaching `1.25*krylov_size` iterations, the iteration is forced to terminate because of the poor rate of convergence. Increase krylov_size if the simulation reports insufficient norm reduction errors in GMRES.

© 2003-2020 All Rights Reserved.

Annotation parameters

32	`annotate=sweep`	Degree of annotation. Possible values are `no`, `title`, `sweep`, `status`, `steps`, and `detailed_hb`.
33	`title`	Analysis title.

In practice, noise can mix with each of the harmonics of the quasi-periodic drive signal applied in the QPSS analysis and end up at the output frequency. The QPNOISE analysis includes only the noise that mixes with a finite set of harmonics that are specified using the `clockmaxharm` and `sidevec` parameters. Sidebands are vectors in quasi-periodic analyses. For one large tone and one moderate tone in QPSS, a sideband K1 is represented as [K1_1 K1_2]. Corresponding frequency shift is as follows:

`K1_1 * fund(large tone of QPSS) + K1_2 * fund` (moderate tone of QPSS)

Assuming that there are L large and moderate tones in QPSS analysis and a given set of n integer vectors representing the sidebands:

```
K1 = { K1_1,...K1_j..., K1_L} ,
K2, ... , Kn.
```

If Ki represents sideband i, then:

```
f(noise_source) = f(out) +  SUM_j=1_to_L{ Ki_j * fund_j(qpss) },
```

The `clockmaxharm` parameter affects only clock frequency. It can be less or more than `maxharms[1]` in QPSS. Moderate tones are limited by `maxharms` specified in QPSS. Only the selected sidebands specified using the `sidevec` parameter are included in the calculation. Care should be taken when specifying `sidevec` or `clockmaxharm` in QPNOISE and `maxharms` in QPSS. Noise results are erroneous if you do not include the sidebands that contribute significant noise to the output.

The number of requested sidebands changes substantially the simulation time.

You can specify sweep limits by specifying the end points or the center value and span of the sweep. Steps can be linear or logarithmic, and you can specify the number of steps or the size of each step. You can specify a step size parameter (`step`, `lin`, `log`, or `dec`) to determine whether the sweep is linear or logarithmic. If you do not specify a step size parameter, the sweep is linear when the ratio of stop to start values is less than 10 and logarithmic when this ratio is 10 or greater. Alternatively, you may specify the values that the sweep parameter should take using the `values` parameter. If you specify both a specific set of values and a set specified using a sweep range, the two sets are merged and collated before being used. All frequencies are in Hertz.

© 2003-2020 All Rights Reserved.

Parameter Index

In the following index, the number corresponding to each parameter name indicates where to find the description of that parameter.

annotate 32
center 3
clockmaxharm 17
dec 7
gear_order 26
hbprecond_solver 29
iprobe 14
krylov_size 31
lin 6
log 8
lowmem 30
nestlvl 20
noiseout 22
oprobe 13
refsideband 15
refsidebandoption 16
relativeTol 25
relharmvec 12
resgmrescycle 28
save 19
saveallsidebands 21
separatenoise 23
sidevec 18
solver 27
span 4
start 1
step 5
stop 2
sweeptype 11
title 33
tolerance 24
values 9
valuesfile 10

© 2003-2020
All Rights Reserved.

Quasi-Periodic S-Parameter Analysis (qpsp)

Description

The quasi-periodic SP (QPSP) analysis is used to compute scattering and noise parameters for n-port circuits that exhibit frequency translation. Such circuits include mixers, switched-capacitor filters, samplers, phase-locked loops, and the like. It is a small-signal analysis like SP analysis, except, as done in QPAC and QPXF, the circuit is first linearized about a quasi-periodically varying operating point as opposed to a simple DC operating point. Linearizing about a quasi-periodically time-varying operating point allows the computation of S-parameters between circuit ports that convert signals from one frequency band to another. QPSP can also calculate noise parameters in frequency-converting circuits. QPSP computes noise figure (both single-sideband and double-sideband), input referred noise, equivalent noise parameters, and noise correlation matrices. As in QPNOISE, but unlike SP, the noise features of the QPSP analysis include noise folding effects due to the periodically time-varying nature of the circuit.

Computing the n-port S-parameters and noise parameters of a quasi-periodically varying circuit is a two-step process. First, the small stimulus is ignored and the quasi-periodic steady-state response of the circuit to possibly large periodic stimulus is computed using QPSS analysis. As part of the QPSS analysis, the quasi-periodically time-varying representation of the circuit is computed and saved for later use. The second step is to apply small-signal excitations to compute the n-port S-parameters and noise parameters. This is done using the QPSP analysis. A QPSP analysis cannot be used independently; it must follow a QPSS analysis. However, any number of periodic small-signal analyses, such as QPAC, QPSP, QPXF, QPNOISE, can follow a single QPSS analysis.

Unlike other analyses in Spectre, this analysis can only sweep frequency.

For information on how to run QPSP analysis from ADE, see *QPSP Analysis* in the *Spectre Circuit Simulator and Accelerated Parallel Siumulator RF Analysis User Guide*.

Definition

```
Name qpsp parameter=value ...
```

Parameters

© 2003-2020 All Rights Reserved.

Sweep interval parameters

1	`start=0`	Start sweep limit.
2	`stop`	Stop sweep limit.
3	`center`	Center of sweep.
4	`span=0`	Sweep limit span.
5	`step`	Step size, linear sweep.
6	`lin=50`	Number of steps, linear sweep.
7	`dec`	Points per decade.
8	`log=50`	Number of steps, log sweep.
9	`values=[...]`	Array of sweep values.
10	`valuesfile`	Name of the file containing the sweep values.
11	`sweeptype`	Specifies if the sweep frequency range is an absolute frequency, that is, the actual frequency, or if it is relative to the "relharmvec" sideband frequency. In QPSP, relative means relative to the input port frequency. Possible values are `absolute` and `relative`.

Port parameters

12	`ports=[...]`	List of active ports. Ports are numbered in the order given. For purposes of noise figure computation, the input is considered port 1 and the output is port 2.
13	`portharmsvec=[...]`	List of the reference sidebands for the specified list of ports. Must have a one-to-one correspondence with the `ports` vector.
14	`harmsvec=[...]`	List of sidebands, in addition to ones associated with specific ports by portharmsvec, that are active. Call them secondary.

© 2003-2020 All Rights Reserved.

Output parameters

14	`freqaxis`	Specifies whether the results should be printed as per the input port frequency, the output port frequency, or the absolute value of the input frequency. The default is `in`. Possible values are `absin`, `in`, and `out`.
15	`file`	Name of the output file. It only supports S-parameters in PSP, HBSP, and QPSP analyses.
16	`datafmt=spectre`	Data format of the S-parameter output file. Possible values are `spectre`, `touchstone`, and `touchstone2`.
18	`datatype=realimag`	Data type of the S-parameter output file. Possible values are `realimag`, `magphase`, and `dbphase`

Noise parameters

19	`donoise=yes`	Perform noise analysis. If oprobe is specified as a valid port, this is set to yes, and a detailed noise output is generated. Possible values are `no` and `yes`.

Probe parameters

20	`clockmaxharm=7`	In shooting pnoise, the parameter determines the maximum sideband included when computing noise that is either up-converted or down-converted to the output by the periodic drive signal. The default value for the shooting pnoise is 7. In HB pnoise, this parameter determines the size of the small signal system when the HB pnoise is performed. This parameter is critical for the accuracy of the HB pnoise analysis; using small maxsideband may cause accuracy loss. The default value for the HB pnoise is the `harms/maxharms` setting in the HB large signal analysis.

© 2003-2020 All Rights Reserved.

Convergence parameters

21	`tolerance`	Tolerance for the linear solver. The default value is `1.0e-9` for shooting-based solver, and `1.0e-4` for harmonic balance-based solver.
22	`relativeTol`	Relative tolerance for harmonicbalance-based linear solver; the default value is `1.0e-2`.
23	`gear_order=2`	Gear order used for small-signal integration, 1 or 2.
24	`solver=turbo`	Solver type. Possible values are `std` and `turbo`.
25	`resgmrescycle=short`	Restarts GMRES cycle. Possible values are `instant`, `short`, `long`, `recycleinstant`, `recycleshort`, `custom`, and `recyclelong`.
26	`hbprecond_solver=autoset`	Select a linear solver for the GMRES preconditioner. Default is autoset. With autoset, the simulator will automatically select the appropriate preconditioner. The preconditioner affects the rate of convergence of the linear matrix solver used in periodic small-signal analysis. When autoset is selected, the simulator may decide to switch to a different preconditioner after the analysis begins. When that happens, the simulator may issue a warning instructing you to choose a different preconditioner during subsequent runs. Although not required, choosing a different preconditioner according to the simulator's instructions may speed up subsequent analyses. Possible values are `basicsolver`, `blocksolver`, `autoset`, `blockdense`, and `blocksolver2`.
27	`lowmem=0`	Harmonic balance low memory mode. Possible values are `0`, `1`, or number (>=10). The default value is `0`, it indicates that the low memory mode is turned off; if `1` is set, the standard low memory mode is turned on; if a number greater that or equal to `10` is set, Spectre interprets the value as memory requested in Gigabytes.
28	`krylov_size=200`	The maximum iteration count of the linear matrix solver used in periodic small-signal analysis. After reaching `1.25*krylov_size` iterations, the iteration is forced to terminate because of the poor rate of convergence. Increase krylov_size if the simulation reports insufficient norm reduction errors in GMRES.

© 2003-2020 All Rights Reserved.

Annotation parameters

29	`annotate=sweep`	Degree of annotation. Possible values are `no`, `title`, `sweep`, `status`, `steps`, and `detailed_hb`.
30	`title`	Analysis title.

To specify the QPSP analysis, the port and sideband combinations must be specified. You can select the ports of interest by setting the `port` parameter and the set of periodic small-signal output frequencies of interest by setting `portharmsvec` or `harmsvec` parameter. Sidebands are vectors in QPSP. Assuming that there is one large tone and one moderate tone in QPSS, a sideband K1 is represented as `[K1_1 K1_2]`. The corresponding frequency is as follows:

`K1_1 * fund(large tone of QPSS) + K1_2 * fund` (moderate tone of QPSS) `= SUM_j=1_to_L{Ki_j * fund_j(qpss)}`

It is also assumed that there are L (1 large plus L-1 moderate) tones in QPSS analysis and a given set of n integer vectors representing the sidebands

```
K1 = { K1_1,...K1_j..., K1_L } , K2, ... Kn.
```

If we specify the relative frequency, the scattering parameters at each port are computed at the following frequencies:

```
f(scattered)= f(rel) + SUM_j=1_to_L{Ki_j * fund_j(qpss)},
```

where, `f(rel)` represents the relative frequency of a signal incident on a port, `f(scattered)` represents the frequency to which the relevant scattering parameter represents the conversion, and f`und_j(qpss)` represents the fundamental frequency used in the corresponding QPSS analysis.

In the analysis of a down-converting mixer with a blocker and of the signal in the upper sideband, sweep the input frequency of the signal coming into RF port. The most relevant sideband for this input is Ki= {1 , 0}, and for IF output, it is Ki= {0 , 0}. Hence, you can associate K1={1 , 0} with the RF port and K2={0 , 0} with the IF port. S21 represents the transmission of a signal from RF to IF, and S11 represents the reflection of the signal back to the RF port. If the signal is in the lower sideband, a choice of K1={-1 , 0} would be more appropriate.

Either `portharmsvec` or `harmsvec` can be used to specify the sidebands of interest. If `portharmsvec` is given, the sidebands must be in one-to-one correspondence with the ports, with each sideband associated with a single port. If sidebands are specified in the optional `harmsvec` parameter, all possible frequency-translating scattering parameters associated with the specified sidebands on each port are computed.

© 2003-2020 All Rights Reserved.

With QPSP, the frequency of the input and of the response are usually different (this is an important area in which QPSP differs from SP). Because the QPSP computation involves inputs and outputs at frequencies that are relative to multiple sidebands, the `freqaxis` and `sweeptype` parameters behave somewhat differently in QPSP than in QPAC and QPXF.

The `sweeptype` parameter controls the way the frequencies in the QPSP analysis are swept. A `relative` sweep is a sweep relative to the port sideband (not the QPSS fundamental), and an `absolute` sweep is a sweep of the absolute input source frequency. For example, with a QPSS fundamentals of 1000MHz (LO) and 966MHz (blocker in RF channel), `portharmsvec` could be set to [0 1 -1 1] to examine a downconverting mixer. If `sweeptype` is set to `relative` with a sweep range of f(rel)=-10MHz<->10MHz, S21 would represent the strength of the signal transmitted from the input port in the range 956->976MHz to the output port to the frequencies 24<->44MHz. Using `sweeptype=absolute` and sweeping the frequency from 966<->976MHz would calculate the same quantities, because `f(abs)=956<->976MHz, and f(rel) = f(abs) - ( K1_1 * fund_1(qpss) + K1_2 * fund_2(qpss)) = -10MHz<->10MHz,` where, `K1_1=0, K1_2=1, fund_1(qpss) = 1000MHz,` and `fund_2(qpss) = 966MHz`.

The `freqaxis` parameter is used to specify whether the results should be output versus the scattered frequency at the input port (`in`), the scattered frequency at the output port (`out`), or the absolute value of the frequency swept at the input port (`absin`).

An increase in the number of requested ports increases the simulation time substantially. The same happens if you increase the number of sidebands to be included in the noise computations.

QPSP analysis also computes noise figures, equivalent noise sources, and noise parameters. The noise computation, which is skipped only when `donoise=no`, requires additional simulation time.

If:

No = total output noise at frequency f

Ns = noise at the output due to the input probe (the source)

Nsi = noise at the output due to the image harmonic at the source

Nso = noise at the output due to harmonics other than input at the source

Nl = noise at the output due to the output probe (the load)

IRN = input referred noise

G = gain of the circuit

© 2003-2020 All Rights Reserved.

F = noise factor (single side band)

NF = noise figure (single side band)

Fdsb = double sideband noise factor

NFdsb = double sideband noise figure

Fieee = IEEE single sideband noise factor

NFieee = IEEE single sideband noise figure

Then:

IRN = sqrt(No^2 / G^2)

F = (No^2 - Nl^2)/Ns^2

NF = 10*log10(F)

Fdsb = (No^2 - Nl^2)/(Ns^2+Nsi^2)

NFdsb = 10*log10(Fdsb)

Fieee = (No^2 - Nl^2 - Nso^2)/Ns^2

NFieee = 10*log10(Fieee).

When the results are output, IRN is named `in`, G is named `gain`, F, NF, Fdsb, NFdsb, Fieee, and NFieee are named `F`, `NF`, `Fdsb`, `NFdsb`, `Fieee`, and `NFieee`, respectively.

Note: The gain computed by QPSP is the voltage gain from the actual circuit input to the circuit output, and not the gain from the internal port voltage source to the output.

To ensure accurate noise calculations, the `clockmaxharm` parameters must be set to include the relevant noise folding effects. `clockmaxharm` is relevant only to the noise computation features of QPSP.

You can specify sweep limits by specifying the end points or the center value and span of the sweep. Steps can be linear or logarithmic, and you can specify the number of steps or the size of each step. You can specify a step size parameter (`step`, `lin`, `log`, or `dec`) to determine whether the sweep is linear or logarithmic. If you do not specify a step size parameter, the sweep is linear when the ratio of stop to start values is less than 10 and logarithmic when this ratio is 10 or greater. Alternatively, you may specify the values that the sweep parameter should take by using the `values` parameter. If you specify both a specific

© 2003-2020 All Rights Reserved.

set of values and a set specified using a sweep range, the two sets are merged and collated before being used. All frequencies are in Hertz.

Parameter Index

In the following index, the number corresponding to each parameter name indicates where to find the description of that parameter.

annotate 29
center 3
clockmaxharm 20
datafmt 17
datatype 18
dec 7
donoise 19
file 16
freqaxis 15
gear_order 23
harmsvec 14
hbprecond_solver 26
krylov_size 28
lin 6
log 8
lowmem 27
portharmsvec 13
ports 12
relativeTol 22
resgmrescycle 25
solver 24
span 4
start 1
step 5
stop 2
sweeptype 11
title 30
tolerance 21
values 9
valuesfile 10

© 2003-2020 All Rights Reserved.

Quasi-Periodic Steady State Analysis (qpss)

Description

Quasi-periodic steady-state (QPSS) analysis computes circuit response with multiple fundamental frequencies using harmonic balance (in frequency domain) or shooting. QPSS can compute circuit responses with closely spaced or incommensurate fundamentals, which cannot be resolved by PSS efficiently. The simulation time of QPSS analysis is independent of the time-constants of the circuit. In addition, QPSS analysis sets the circuit quasi-periodic operating point, which can then be used during a quasi-periodic time-varying small-signal analysis, such as QPAC, QPXF, QPSP, and QPNOISE.

Harmonic balance (HB) is efficient in simulating weak nonlinear circuits while shooting is more suitable for computing a circuit response to several moderate input signals, in addition to a large signal. The large signal, which represents a LO or clock signal, is usually the one that causes the most nonlinearity or the largest response. A typical example is the intermodulation distortion measurements of a mixer with two closely spaced moderate input signals. HB is more efficient than shooting in handling frequency-dependent components, such as delay, transmission line, and S-parameter data.

QPSS consists of three phases. First, an initial transient analysis with all moderate input signals suppressed is carried out. Second, a number of (at least 2) stabilizing iterations are run with all signals activated. Finally, the Newton method is followed.

When the shooting method is used, QPSS employs the Mixed Frequency Time (MFT) algorithm extended to multiple fundamental frequencies. For details of MFT algorithm, see `Steady-State Methods for Simulating Analog and Microwave Circuits,` by K. S. Kundert, J.K. White, and A. Sangiovanni-Vincentelli, Kluwer, Boston, 1990.

Similar to shooting in PSS, shooting in QPSS uses Newton method as its backbone. However, instead of doing a single transient integration, each Newton iteration does a number of transient integrations of one large signal period. Each of the integrations differs by a phase-shift in each moderate input signal. The number of integrations is determined by the numbers of harmonics of moderate fundamentals specified by `maxharms`. Given `maxharms=[k1 k2 ... kn]`, QPSS always treats k1 as the maximum harmonic of the large signal, and the total number of integrations is `(2*k2+1)*(2*k3+1)*...*(2*kn+1)`. One consequence is that the efficiency of the algorithm depends significantly on the number of harmonics required to model the responses of moderate fundamentals. Another consequence is that the number of harmonics of the large fundamental does not significantly affect the efficiency of the shooting algorithm. The boundary conditions of a shooting interval are such that the time domain integrations are consistent with a frequency domain transformation with a shift of one large signal period.

© 2003-2020 All Rights Reserved.

QPSS inherits most of the PSS parameters and adds a few new ones. The most important ones are `funds` and `maxharms`. They replace the PSS parameter, `fund` (or `period`) and `harms`, respectively. The `funds` parameter accepts a list of names of fundamentals that are present in the sources. These names are specified in the sources by the `fundname` parameter. In both shooting and HB QPSS analysis, the first fundamental is considered as the large signal. A few heuristics can be used for picking the large fundamental.

(1) Pick the fundamental that is not a sinusoidal.

(2) Pick the fundamental that causes the most nonlinearity.

(3) Pick the fundamental that causes the largest response.

The `maxharms` parameter accepts a list of numbers of harmonics that are required to sufficiently model responses due to different fundamentals.

The semi-autonomous simulation is a special QPSS analysis combining the autonomous simulation and the QPSS. For the semi-autonomous simulation, you need to specify an initial frequency guess for the oscillator inside the circuit, and two oscillator terminals, just like the autonomous simulation in the PSS. For example:

```
myqpss (op on) qpss funds=[1.1GHz frf] maxharms=[5 5] tstab=1u
flexbalance=yes
```

The semi-autonomous simulation is only available in the frequency domain.

For information on how to run QPSS analysis from ADE, see *Quasi Periodic Steady-State Analysis (QPSS)* in the *Spectre Circuit Simulator and Accelerated Parallel Siumulator RF Analysis User Guide*.

Definition

```
Name ... qpss parameter=value ...
```

Parameters

QPSS fundamental parameters

1	`funds=[...]`	Array of fundamental frequency names for fundamentals to use in analysis.

© 2003-2020 All Rights Reserved.

2	`maxharms=[...]`	Array of number of harmonics of each fundamental to consider for each fundamental.
3	`autoharms=no`	Activates automatic harmonic number calculation in harmonic balance. Applies only if tstab>0 or if autotstab=yes. If a steady-state is reached, Spectre does a spectrum analysis to calculate the optimal number of harmonics for HB. The minimum number of harmonics is specified by `maxharms`. If steady-state is not reached to sufficient tolerance, autoharms may be disabled. Possible values are `no` and `yes`.
4	`selectharm`	Name of harmonics selection methods. Default is diamond when `maximorder` or `boundary` is set; otherwise, default is box. Possible values are `box`, `diamond`, `funnel`, `axis`, `widefunnel`, `crossbox`, `crossbox_hier`, and `arbitrary`.
5	`evenodd=[...]`	Array of even, odd, or all strings for moderate tones to select harmonics.
6	`maximorder`	Maximum intermodulation order of harmonics in `diamond`, `funnel`, `widefunnel`, `crossbox` and `crossbox_hier` cuts. For example, given a two-tone case, a harmonic, [hx hy], is in the `diamond`, `funnel` or `widefunnel` harmonic set when `|hx|+|hy| <= maximorder`. And it is in the `crossbox` or `crossbox_hier` set when `|hx| <= maximorder` and `|hy| <= maximorder`.
7	`mappingfft=no`	This parameter is valid only for funnel harmonic cut. Setting this parameter to yes may save more memory but can hamper accuracy. Possible values are `no` and `yes`.
8	`axisbw`	The width of the band part of wide funnel harmonic cut along axis.
9	`minialiasorder`	The order of mini aliasing harmonic order.
10	`selharmvec=[...]`	Array of harmonics indexes.
11	`harmlist=[...]`	Array of harmonics indexes for time domain qpss.
12	`freqdivide`	Large signal frequency division.
13	`freqdividevector=[...]`	Array of frequency division factors for each tone. This parameter overrides `freqdivide`.

© 2003-2020 All Rights Reserved.

Simulation interval parameters

14	`tstab=0.0 s`	Extra stabilization time after the onset of periodicity for independent sources.
15	`autotstab=no`	Activates automatic initial transient (tstab) in harmonic balance and PSS shooting. If set to yes, the simulator decides whether to run tstab and for how long. Typically, the initial length of tstab is 50 periods, however, it could be longer depending on the type of circuit and its behavior. If steady-state is reached (or nearly reached), tstab will terminate early. Possible values are `no` and `yes`.
16	`autosteady=no`	Activates automatic steady state detection during initial transient (tstab) in harmonic balance. When steady state is reached (or nearly reached), tstab will terminate early. This parameter applies only when tstab>0 or when autotstab=yes. Possible values are `0`, `1`, `2`, `no` and `yes`. ■ `autosteady=no`|`0`: turns this feature off; ■ `autosteady=yes`|`1`: activates this feature; ■ `autosteady=2`: runs autosteady with lower steady state tolerance than `autosteady=1`. autosteady=2 may help pss convergence but with higher tstab costs
17	`stabcycles=2`	Stabilization cycles with both large and moderate sources enabled.
18	`tstart=0.0 s`	Initial transient analysis start time.

Time-step parameters

19	`maxstep (s)`	Maximum time step. The default is derived from `errpreset`.
20	`maxacfreq`	Maximum frequency requested in a subsequent periodic small-signal analysis. The default is derived from `errpreset` and `harms`. This parameter is valid only for shooting.

© 2003-2020 All Rights Reserved.

21	`step=0.001 period s`	Minimum time step that would be used solely to maintain the aesthetics of the results. This parameter is valid only for shooting.

Initial-condition parameters

22	`ic=all`	The value to be used to set the initial condition. Possible values are `dc`, `node`, `dev`, and `all`.
23	`skipdc=no`	If set to `yes`, there is no DC analysis for initial transient. Possible values are `no`, `yes`, and `sigrampup`.
24	`readic`	File that contains initial condition.
25	`useprevic=no`	If set to yes or ns, use the converged initial condition from previous analysis as ic or ns. Possible values are `no`, `yes`, and `ns`.
26	`oscic=default`	Oscillator IC method. It determines how the starting values for the oscillator are calculated. `oscic=lin` provides you an accurate initial value, but it takes time. `oscic=lin_ic`, which is an older version of `oscic=lin` is used for shooting analysis for backward compatibility and is not recommended. `oscic=fastic` is fast, but it is less accurate. `oscic=skip` directly uses the frequency you provided as the initial guess frequency. It is only for two-tier method. Possible values are `default`, `lin`, `lin_ic`, `fastic`, and `skip`.
27	`tone_homotopy=[...]`	Array of homotopy options for convergence assistance with multi-divider cases, when `hbhomotopy=aggregation`. The number of entries should be equal to that of tones. The possible values for each entry are `0`, `1`, and `2`. `0` means no convergence assistance is applied for that tone. `1` means only transient stabilization (tstab) is run for that tone. `2` means both tstab and a single-tone HB simulation should be run to obtain the initial guess for multi-tone HB simulation.

© 2003-2020 All Rights Reserved.

Convergence parameters

28	`readns`	File that contains an estimate of the initial transient solution.
29	`cmin=0 F`	Minimum capacitance from each node to ground.

Output parameters

30	`save`	Signals to output. Possible values are `all`, `lvl`, `allpub`, `lvlpub`, `selected`, `none`, and `nooutput`.
31	`nestlvl`	Levels of subcircuits to output.
32	`oppoint=no`	Should operating point information be computed for initial timestep; if yes, where should it be printed (screen or file). Possible values are `no`, `screen`, `logfile`, and `rawfile`.
33	`skipstart=0 s`	The time to start skipping output data.
34	`skipstop=stop s`	The time to stop skipping output data.
35	`skipcount=1`	Save only one of every skipcount points.
36	`strobeperiod=0 s`	The output strobe interval (in seconds of transient time).
37	`strobedelay=0 s`	The delay (phase shift) between the skipstart time and the first strobe point.
38	`saveinit=no`	If set to `yes`, the waveforms for the initial transient before steady state are saved. Possible values are `no` and `yes`.

State-file parameters

39	`write`	File to which initial transient solution (before steady-state) is written.
40	`writefinal`	File to which final transient solution in steady-state is written. This parameter is now valid only for shooting.

© 2003-2020 All Rights Reserved.

41	`swapfile`	Temporary file to hold steady-state information. It tells Spectre to use a regular file rather than virtual memory, to hold the periodic operating point. Use this option if Spectre complains about not having enough memory to complete the analysis. This parameter is now valid only for shooting.
42	`writeqpss`	File to which final quasi-periodic steady-state solution is written. Small signal analyses, such as qpac, qpxf, and qpnoise, can read in the steady-state solution from this file directly, instead of running the qpss analysis again. The file of shooting and HB cant mutually reuse.
43	`readqpss`	File from which final quasi-periodic steady-state solution is to be read. Small signal analyses, such as qpac, qpxf, and qpnoise, can read in the steady-state solution from this file directly, instead of running the qpss analysis again. The file of shooting and HB cannot be mutually reused.
44	`selharmread`	File from which arbitrary harmonic data needs to be read.
45	`selharmwrite`	File to which harmonic data needs to be written.

Integration method parameters

46	`method`	Integration method. The default is derived from `errpreset`. This parameter is valid only for shooting. Possible values are `euler`, `trap`, `traponly`, `gear2`, and `gear2only`.

Accuracy parameters

47	`errpreset`	Selects a reasonable collection of parameter settings. Possible values are `liberal`, `moderate`, and `conservative`.

© 2003-2020 All Rights Reserved.

48	`relref`	Reference used for the relative convergence criteria. The default is derived from `errpreset`. Possible values are `pointlocal`, `alllocal`, `sigglobal`, and `allglobal`.
49	`lteratio`	Ratio used to compute LTE tolerances from Newton tolerance. The default is derived from `errpreset`.
50	`lteminstep=0.0 s`	Local truncation error is ignored if the step size is less than lteminstep.
51	`steadyratio`	Ratio used to compute steady-state tolerances from LTE tolerance. The default is derived from `errpreset`.
52	`maxperiods`	Maximum number of iterations allowed before convergence is reached in shooting or harmonic balance Newton iteration. For PSS and QPSS, the default is 20 for driven circuits, and 50 for oscillators; For HB, the default is 100.
53	`max_innerkrylov_size=20`	The maximum iteration number allowed in inner gmres solver in two-level gmres linear solver.
54	`max_outerkrylov_size=4`	The maximum iteration number allowed in inner gmres solver in two-level gmres linear solver.
55	`itres=1e-4 for shooting, 0.9 for HB`	Controls the residual for iterative solution of linearized matrix equation at each Newton iteration. Tightening the parameter can help with the Newton convergence, but does not affect the result accuracy. The value should be between [0, 1]. Default value for shooting APS flow is `1e-3`.
56	`inexactNewton=no`	Inexact Newton method. Possible values are `no` and `yes`.
57	`finitediff`	Options for finite difference method refinement after quasi-periodic shooting method. `finitediff` is changed from no to same grid automatically when `readqpss` and `writeqpss` are used to reuse QPSS results. Possible values are `no`, `yes`, and `refine`.

© 2003-2020 All Rights Reserved.

Harmonic Balance parameters

58	`harmonicbalance=no`	Use Harmonic Balance engine instead of time-domain shooting. Possible values are `no` and `yes`.
59	`flexbalance=no`	Same parameter as `harmonicbalance`. Possible values are `no` and `yes`.
60	`hbpartition_defs=[...]`	Define HB partitions.
61	`hbpartition_fundratios=[...]`	Specify HB partition fundamental frequency ratios.
62	`hbpartition_harms=[...]`	Specify HB partition harmonics.
63	`oversamplefactor=1`	Oversample device evaluations.
64	`oversample=[...]`	Array of oversample factors for each tone. This parameter overrides oversamplefactor.
65	`hbhomotopy=tone`	Name of Harmonic Balance homotopy selection methods. Possible values are `tstab`, `source`, `gsweep`, `tone`, `inctone`, and `aggregation`.
66	`sweepic=none`	IC extrapolation method in sweep HB analysis. Possible values are `none`, `linear`, and `log`.
67	`gstart=1.e-7`	Start conductance for hbhomotopy of gsweep.
68	`gstop=1.e-12`	Stop conductance for hbhomotopy of gsweep.
69	`glog=5`	Number of steps, log sweep for hbhomotopy of gsweep
70	`backtracking=yes`	This parameter is used to activate the backtracking utility of Newton's Method. Default is `yes`. Possible values are `no`, `yes`, and `forced`.
71	`excludeconvgwithBK=yes`	Possible values are `no` and `yes`.
72	`krylov_size=10`	The minimum iteration count of the linear matrix solver used in HB large-signal analysis. After reaching the `krylov_size` iterations, the iteration is forced to terminate because of poor rate of convergence. Increase `krylov_size` if the simulation reports insufficient norm reduction errors in GMRES.

© 2003-2020 All Rights Reserved.

73	`hbprecond_solver=basicsolver`	Choose a linear solver for the GMRES preconditioner. Possible values are `basicsolver`, `blocksolver`, `autoset`, `blockdense`, and `blocksolver2`.
74	`lowmem=0`	Harmonic balance low memory mode. Possible values are `0`, `1`, or number (>=10). The default value is `0`, it indicates that the low memory mode is turned off; if `1` is set, the standard low memory mode is turned on; if a number greater that or equal to `10` is set, Spectre interprets the value as memory requested in Gigabytes.

Annotation parameters

75	`annotate=sweep`	Degree of annotation. Possible values are `no`, `title`, `sweep`, `status`, `estimated`, `steps`, `iters`, `detailed`, `rejects`, `alliters`, `detailed_hb`, and `internal_hb`.
76	`annotateic=no`	Degree of annotation for initial condition. Possible values are `no`, `title`, `sweep`, `status`, `estimated`, `steps`, `iters`, `detailed`, `rejects`, and `alliters`.
77	`title`	Analysis title.

Newton parameters

78	`maxiters=5`	Maximum number of iterations per time step.
79	`restart=no`	Restart the DC/PSS/QPSS solution if set to yes; if set to no, reuse the previous solution as initial guess; if set to firstonly, restart if it is first point of sweep; it is supported only in HB. The default value is no for HB and yes for shooting. Possible values are `no`, `yes`, and `firstonly`.

Circuit age

80	`circuitage (Years)`	Stress time. Age of the circuit used to simulate hot-electron degradation of MOSFET and BSIM circuits.

© 2003-2020 All Rights Reserved.

Tstab save/restart parameters

81	`ckptperiod`	Checkpoint the analysis periodically by using the specified period.
82	`saveperiod`	Save the tran analysis periodically on the simulation time.
83	`saveperiodhistory=no`	Maintains the history of saved files. If `yes`, stores all the saved files. Possible values are `yes` and `no`.
84	`saveclock (s)`	Save the tran analysis periodically on the wall clock time. The default is 1800s for Spectre. This parameter is disabled in Spectre APS mode by default.
85	`savetime=[...]`	Save the analysis states into files on the specified time points.
86	`savefile`	Save the analysis states into the specified file.
87	`recover`	Specify the file to be restored.

Compression parameters

88	`xdbcompression="no"`	Sets the automatic gain compression analysis. In automatic gain compression analysis, Spectre automatically sweeps the input excitation until the gain, as defined by the analysis parameter xdbgain, compresses by the amount specified by the analysis parameter xdblevel. In gain compression analysis, Spectre outputs the hb solution at the calculated compression point only. Dependent analyses, such as hbnoise and hbac, are supported and calculated about the calculated compression level. Auxiliary output includes the gain and voltage/power compression curves. These outputs are available for analysis and post-processing in ADE. The possible values are `yes` and `no`. Default is `no`.
89	`xdblevel=1.0`	Sets the gain compression level for compression analysis. The reference point for gain compression is the small-signal gain of the circuits, or as specified by the analysis parameter `xdbref`. Default is `1`.

© 2003-2020 All Rights Reserved.

90	`xdbgain="power"`	Chooses between the voltage gain or transducer power gain as the target for compression point calculation. When `xdbgain=power`, the gain is defined as *G (dB) = Pload (dBm) - Pavailable (dBm)*. When `xdbgain=voltage`, the gain is defined as *G (dB) = dB20(|Vload|/|Vsource|)*. In both cases, Spectre sweeps the excitation source until *xdbref - G = xdblevel*, where the analysis parameter xdbref defines the reference level for compression calculation. Possible values are `power` and `voltage`. Default is `power`.
91	`xdbref="linear"`	Sets the reference point for gain compression calculations. When `xdbref=linear`, spectre uses the small-signal gain as the reference. When `xdbref=max`, spectre uses the maximum observed gain as the reference. Possible values are `linear` and `max`. Default is `linear`.
92	`xdbsource`	The instance name of the excitation source, which is swept automatically to reach the compression level. When `xdbgain=power`, the excitation source must be a port instance. When `xdbgain=voltage`, the excitation source must be a vsource instance.
93	`xdbload`	The instance name of the load termination. When `xdbgain` is `power`, `xdbload` can be a port, a resistor, or a current probe.
94	`xdbnodep`	The output terminals for voltage gain calculation when `xdbgain=voltage`. If either is left unspecified, the terminal is assumed to be the global ground.
95	`xdbnoden`	The output terminals for voltage gain calculation when `xdbgain=voltage`. If either is left unspecified, the terminal is assumed to be the global ground.
96	`xdbrefnode`	The reference node when `xdbload` is a current probe. The default is the ground node.
97	`xdbharm=[...]`	The Integer array which specifies the harmonic indexes of the output voltage or power component.
98	`xdbsteps=100`	The maximum number of steps for the compression point search. The simulator terminates if `xdbsteps` exceeds before the compression point is found. The default is `100`.

© 2003-2020 All Rights Reserved.

99	`xdbmax`	The maximum input power (or voltage) for the compression point search. Default is `30 dBm` when `xdbgain=power` and `2.0 V` when `xdbgain=voltage`.
100	`xdbstart`	The starting input power (or voltage) for the compression point search. Default is (xdbmax-70) dBm when xdbgain=power, and xdbmax/20000 when xdbgain=voltage.
101	`xdbtol=0.01`	Sets the tolerance for compression analysis. This tolerance is used in compression curve fitting and calculating the compression point.
102	`xdbrapid="no"`	Sets the automatic gain compression analysis in rapid mode. In this mode, Spectre does not trace the compression curve and calculates only the compression point.
103	`xdbcpi`	Sets the estimated input-referred compression point for rapid compression analysis.
104	`backoff`	The backoff point. If defined, an additional harmonic balance analysis is performed after the compression analysis is done. Default is 0 dBm when `xdbgain=power`, and 0 V when `xdbgain=voltage`.

Memory estimation parameters

105	`memoryestimate="no"`

© 2003-2020 All Rights Reserved.

	Sets the memory usage estimate for Harmonic Balance. If yes, a memory estimate is printed in the log file. You can use this memory estimate to plan the computing resources before submitting harmonic balance runs. In memory estimate mode, a short simulation is performed first, and the engine exits after printing the estimate in the log file without saving any results. If set to `no`, the simulation continues after the memory estimate is printed.Memory estimation is not recommended for simulations that require less than 500MB approximately. For PSS analysis, memory estimate mode does not apply unless `flexbalance=yes`. Possible values are `no`, and `yes`. `memoryestimate=1` estimates the memory usage for large-signal analysis and `memoryestimate=2` estimates both large-signal analysis and small-signal simulations.

Most of QPSS analysis parameters are inherited from PSS analysis and their meanings remain essentially unchanged. Two new important parameters are `funds` and `maxharms`. They replace and extend the role of `fund` and `harms` parameters of PSS analysis. One important difference is that `funds` accepts a list of fundamental names, instead of actual frequencies. The frequencies associated with fundamentals are figured out automatically by the simulator. An important feature is that each input signal can be a composition of more than one source. However, these sources must have the same fundamental name. For each fundamental name, its fundamental frequency is the greatest common factor of all frequencies associated with the name. Omitting fundamental name in the `funds` parameter is an error that stops the simulation. If `maxharms` is not given, a warning message is issued, and the number of harmonics defaults to 1 for each fundamental.

For QPSS analyses, the role of some PSS parameters is extended compared to their role in PSS analysis. In QPSS, the parameter `maxperiods` that controls the maximum number of shooting iterations for PSS analysis also controls the number of the maximum number of shooting iterations for QPSS analysis. Its default value is set to 50.

The `tstab` parameter controls both the length of the initial transient integration with only the clock tone activated and the number of stable iterations with moderate tones activated. The stable iterations are run before shooting or HB Newton iterations.

The `errpreset` parameter lets you adjust several simulator parameters to fit your needs. In most cases, `errpreset` should be the only parameter you need to adjust. If you want a fast simulation with reasonable accuracy, set errpreset to `liberal`. If you have some concern for accuracy, set errpreset to `moderate`. If accuracy is your main interest, set errpreset to `conservative`.

© 2003-2020 All Rights Reserved.

If you do not specify `steadyratio`, it is always 1.0, and it is not affected by `errpreset`. The following table shows the effect of `errpreset` on other parameters in shooting.

Parameter defaults as a function of errpreset

errpreset	reltol	relref	method	lteratio	maxstep
liberal	1e-3	sigglobal	gear2only	3.5	clock period/80
moderate	1e-4	sigglobal	gear2only	3.5	clock period/100
conservative	1e-5	sigglobal	gear2only	*	clock period/200

* : lteratio=10.0 for conservative `errpreset` by default. However, when the specified reltol <= 1e-5*10.0/3.5, lteratio is set to 3.5.

The new errpreset settings include a new default `reltol` that is actually an enforced upper limit for appropriate setting. An increase of `reltol` above the default is ignored by the simulator. You can decrease this value in the options statement. The only way to increase `reltol` is to relax `errpreset`. Spectre sets the value of `maxstep` so that it is no larger than the value given in the table. Except for `reltol` and `maxstep`, `errpreset` does not change the value of any parameters you have explicitly set. The actual values used for the QPSS analysis are given in the log file. If `errpreset` is not specified in the netlist, `liberal` settings are used

For HB, only `reltol` is affected by `errpreset`, and the effect is the same as that in shooting. However, `lteratio` remains 3.5 and `steadyratio` remains 1 with all values of `errpreset`.

With parameter hbhomotopy, you can specify harmonic balance homotopy selection methods. The possible values of parameter hbhomotopy and their meanings are as follows:

`hbhomotopy=tstab`: Simulator runs a transient analysis and generates an initial guess for harmonic balance analysis; it is recommended for nonlinear circuits or circuits with frequency dividers.

`hbhomotopy=source`: For driven circuit, simulator ignores tstab and accordingly increases the source power level; for oscillators, the simulator accordingly adjusts the probe magnitude until the probe has no effect on the oscillators. It is recommended for strongly nonlinear or high Q circuits

`hbhomotopy=tone`: This method is valid only for multi-tone circuit. The simulator first solves a single-tone circuit by turning off all the tones except the first one, and then solves the multi-tone circuit by restoring all the tones and using the single-tone solution as its initial guess; it is recommended for multi-tone simulation with a strong first tone.

© 2003-2020 All Rights Reserved.

`hbhomotopy=inctone`: Simulator first solves a single tone, then turns on moderate tones incrementally till all tones are enabled. It is recommended for circuits with one strong large tone.

`hbhomotopy=gsweep`: A resistor, whose conductance is g, is connected with each node, and the sweep of g is controlled by gstart, gstop, and glog. It is recommended for circuits containing high-impedance or quasi-floating nodes.

Parameter Index

In the following index, the number corresponding to each parameter name indicates where to find the description of that parameter.

annotate 75
annotateic 76
autoharms 3
autosteady 16
autotstab 15
axisbw 8
backoff 104
backtracking 70
circuitage 80
ckptperiod 81
cmin 29
hbpartition_harms 62
hbprecond_solver 73
ic 22
inexactNewton 56
itres 55
krylov_size 72
lowmem 74
lteminstep 50
lteratio 49
mappingfft 7
max_innerkrylov_size 53
readns 28
readqpss 43
recover 87
relref 48
restart 79
save 30
saveclock 84
savefile 86
saveinit 38
saveperiod 82
saveperiodhistory 83
title 77
tone_homotopy 27
tstab 14
tstart 18
useprevic 25
write 39
writefinal 40
writeqpss 42
xdbcompression 88
xdbcpi 103
xdbgain 90

© 2003-2020 All Rights Reserved.

errpreset 47
evenodd 5
excludeconvgwithBK 71
finitediff 57
flexbalance 59
freqdivide 12
freqdividevector 13
funds 1
glog 69
gstart 67
gstop 68
harmlist 11
harmonicbalance 58
hbhomotopy 66
hbpartition_defs 60
hbpartition_fundratios 61
max_outerkrylov_size 54
maxacfreq 20
maxharms 2
maximorder 6
maxiters 78
maxperiods 52
maxstep 19
memoryestimate 105
method 46
minialiasorder 9
nestlvl 31
oppoint 32
oscic 26
oversample 64
oversamplefactor 63
readic 24
savetime 85
selectharm 4
selharmread 44
selharmvec 10
selharmwrite 45
skipcount 35
skipdc 23
skipstart 33
skipstop 34
stabcycles 17
steadyratio 51
step 21
strobedelay 37
strobeperiod 36
swapfile 41
sweepic 65
xdbharm 97
xdblevel 89
xdbload 93
xdbmax 99
xdbnoden 95
xdbnodep 94
xdbrapid 102
xdbref 91
xdbrefnode 96
xdbsource 92
xdbstart 100
xdbsteps 98
xdbtol 101

© 2003-2020
All Rights Reserved.

Quasi-Periodic Transfer Function Analysis (qpxf)

Description

A conventional transfer function analysis computes the transfer function from every source in the circuit to a single output. Unlike a conventional AC analysis that computes the response from a single stimulus to every node in the circuit, the Quasi Periodic Transfer Function or QPXF analysis computes the transfer functions from any source at any frequency to a single output at a single frequency. Thus, like QPAC analysis, QPXF analysis includes frequency conversion effects.

The QPXF analysis directly computes such useful quantities as conversion efficiency (transfer function from input to output at required frequency), image and sideband rejection (input to output at undesired frequency), and LO feed-through and power supply rejection (undesired input to output at all frequencies).

As with a QPAC, QPSP, and QPNOISE analyses, a QPXF analysis must follow a QPSS analysis.

Unlike other analyses in Spectre, this analysis can only sweep frequency.

For information on how to run QPXF analysis from ADE, see *QPXF Analysis* in the *Spectre Circuit Simulator and Accelerated Parallel Simulator RF Analysis User Guide*.

Definition

```
Name  [p]  [n] qpxf parameter=value ...
```

The optional terminals (p and n) specify the output of the circuit. If you do not specify the terminals, you must specify the output with a probe component.

Parameters

Sweep interval parameters

1	`start=0`	Start sweep limit.
2	`stop`	Stop sweep limit.
3	`center`	Center of sweep.

© 2003-2020 All Rights Reserved.

4	`span=0`	Sweep limit span.
5	`step`	Step size, linear sweep.
6	`lin=50`	Number of steps, linear sweep.
7	`dec`	Points per decade.
8	`log=50`	Number of steps, log sweep.
9	`values=[...]`	Array of sweep values.
10	`valuesfile`	Name of the file containing the sweep values.
11	`sweeptype`	Specifies if the sweep frequency range is an absolute frequency, that is, the actual frequency, or if it is relative to the "relharmvec" sideband frequency. Possible values are `absolute` and `relative`.
12	`relharmvec=[...]`	Sideband- vector of QPSS harmonics- to which relative frequency sweep should be referenced.

Probe parameters

13	`probe`	Compute every transfer function to this probe component.

Output parameters

14	`stimuli=sources`	Stimuli used for xf analysis. Possible values are `sources` and `nodes_and_terminals`.
15	`sidevec=[...]`	Array of relevant sidebands for the analysis.
16	`clockmaxharm=7`	An alternative to the `sidevec` array specification, which automatically generates the array: [-clockmaxharm ... 0 ... +clockmaxharms][-maxharms(QPSS)[2]...0...maxharms(QPSS)[2]][...].
17	`freqaxis`	Specifies whether the results should be printed as per the input frequency, the output frequency, or the absolute value of the input frequency. The default is `absin`. Possible values are `absin`, `in`, and `out`.

© 2003-2020 All Rights Reserved.

18	`save`	Signals to output. Possible values are `all`, `lvl`, `allpub`, `lvlpub`, `selected`, `none`, and `nooutput`.
19	`nestlvl`	Levels of subcircuits to output.

Convergence parameters

20	`tolerance`	Relative tolerance for linear solver; the default value is 1.0e-9 for shooting-based solver and 1.0e-6 for harmonicbalance-based solver.
21	`relativeTol`	Relative tolerance for harmonicbalance-based linear solver; the default value is 1.0e-2.
22	`gear_order=2`	Gear order used for small-signal integration, 1 or 2.
23	`solver=turbo`	Solver type. Possible values are `std` or `turbo`.
24	`resgmrescycle=short`	Restarts GMRES cycle. Possible values are `instant`, `short`, `long`, `recycleinstant`, `recycleshort`, `custom`, and `recyclelong`.
25	`hbprecond_solver=autoset`	Select a linear solver for the GMRES preconditioner. Default is autoset. With autoset, the simulator will automatically select the appropriate preconditioner. The preconditioner affects the rate of convergence of the linear matrix solver used in periodic small-signal analysis. When autoset is selected, the simulator may decide to switch to a different preconditioner after the analysis begins. When that happens, the simulator may issue a warning instructing you to choose a different preconditioner during subsequent runs. Although not required, choosing a different preconditioner according to the simulator's instructions may speed up subsequent analyses. Possible values are `basicsolver`, `blocksolver`, `autoset`, `blockdense`, and `blocksolver2`.

© 2003-2020 All Rights Reserved.

26	`lowmem=0`	Harmonic balance low memory mode. Possible values are `0`, `1`, or number (>=10). The default value is `0`, it indicates that the low memory mode is turned off; if `1` is set, the standard low memory mode is turned on; if a number greater that or equal to `10` is set, Spectre interprets the value as memory requested in Gigabytes.
27	`krylov_size=200`	The maximum iteration count of the linear matrix solver used in periodic small-signal analysis. After reaching `1.25*krylov_size` iterations, the iteration is forced to terminate because of the poor rate of convergence. Increase krylov_size if the simulation reports insufficient norm reduction errors in GMRES.

Annotation parameters

28	`annotate=sweep`	Degree of annotation. Possible values are `no`, `title`, `sweep`, `status`, `steps`, and `detailed_hb`.
29	`title`	Analysis title.

The variable of interest at the output can be voltage or current, and its frequency is not constrained by the period of the large periodic solution. While sweeping the selected output frequency, select the periodic small-signal input frequencies of interest by setting either the `clockmaxharm` or `sidevec` parameter. Sidebands are vectors in QPXF. Assuming that there is one large tone and one moderate tone in QPSS, a sideband K1 is represented as `[K1_1 K1_2]`. The corresponding frequency is as follows:

`K1_1 * fund` (large tone of QPSS) `+ K1_2 * fund` (moderate tone of QPSS)

In addition, assume that there are L (1 large plus L-1 moderate) tones in QPSS analysis and a given set of n integer vectors representing the sidebands:

```
K1 = { K1_1,...K1_j..., K1_L} , K2, ... Kn.
```

The input signal frequency at each sideband is computed as follows:

```
f(in)= f(out) + SUM_j=1_to_L{Ki_j * fund_j(qpss)},
```

where, `f(out)` represents the (possibly swept) output signal frequency, and fund_j(pss) represents the fundamental frequency used in the corresponding QPSS analysis. Thus, when analyzing a down-converting mixer and sweeping the IF output frequency, Ki= {1, 0} for the RF input represents the first upper-sideband, while Ki= {-1, 0} for the RF input represents the first lower-sideband.

© 2003-2020 All Rights Reserved.

Enter `sidevec` as a sequence of integer numbers, separated by spaces. The set of vectors {1 1 0} {1 -1 0} {1 1 1} becomes sidevec=[1 1 0 1 -1 0 1 1 1]. For `clockmaxharm`, only the large tone- the first fundamental is affected; the rest- moderate tones- are limited by `maxharms`, specified for a QPSS analysis. Given `maxharms=[k1max k2max ... knmax]` in QPSS and `clockmaxharm=Kmax, all (2*Kmax + 1)*(2*k2max+1)*(2*k3max+1)*...*(2*knmax+1)` sidebands are generated.

The number of requested sidebands changes substantially the simulation time.

With QPXF, the frequency of the stimulus and of the response are usually different (this is an important area in which QPXF differs from XF). The `freqaxis` parameter is used to specify whether the results should be output versus the input frequency (`in`), the output frequency (`out`), or the absolute value of the input frequency (`absin`).

You can specify the output with a pair of nodes or a probe component. Any component with two or more terminals can be a voltage probe. When there are more than two terminals, they are grouped in pairs, and you use the `portv` parameter to select the appropriate pair of terminals. Alternatively, you can specify a voltage to be the output by giving a pair of nodes on the QPXF analysis statement.

Any component that naturally computes current as an internal variable can be a current probe. If the probe component computes more than one current, you use the `porti` parameter to select the appropriate current. It is an error to specify both `portv` and `porti`. If neither is specified, the probe component provides a reasonable default.

The `stimuli` parameter specifies the inputs for the transfer functions. There are two choices. `stimuli=sources` indicates that the sources present in the circuit should be used. The `xfmag` parameters provided by the sources may be used to adjust the computed gain to compensate for gains or losses in a test fixture. You can limit the number of sources in hierarchical netlists by using the `save` and `nestlvl` parameters. `stimuli=nodes_and_terminals` indicates that all possible transfer functions should be computed.

This is useful when it is not known in advance which transfer functions are interesting. Transfer functions for nodes are computed assuming that a unit magnitude flow (current) source is connected from the node to ground. Transfer functions for terminals are computed assuming that a unit magnitude value (voltage) source is connected in series with the terminal. By default, the transfer functions from a small set of terminals are computed. If transfer functions from specific terminals are required, specify the terminals in the save statement. You must use the `:probe` modifier (for example, Rout:1:probe) or specify `useprobes=yes` on the options statement. If transfer functions from all terminals are required, specify `currents=all` and `useprobes=yes` on the options statement.

© 2003-2020 All Rights Reserved.

You can specify sweep limits by specifying the end points or the center value and span of the sweep. Steps can be linear or logarithmic, and you can specify the number of steps or the size of each step. You can specify a step size parameter (`step`, `lin`, `log`, or `dec`) to determine whether the sweep is linear or logarithmic. If you do not specify a step size parameter, the sweep is linear when the ratio of stop to start values is less than 10 and logarithmic when this ratio is 10 or greater. Alternatively, you may specify the values that the sweep parameter should take by using the `values` parameter. If you specify both a specific set of values and a set specified using a sweep range, the two sets are merged and collated before being used. All frequencies are in Hertz.

Parameter Index

In the following index, the number corresponding to each parameter name indicates where to find the description of that parameter:

annotate 28	lin 6	save 18	sweeptype 11
center 3	log 8	sidevec 15	title 29
clockmaxharm 16	lowmem 26	solver 23	tolerance 20
dec 7	nestlvl 19	span 4	values 9
freqaxis 17	probe 13	start 1	valuesfile 10
gear_order 22	relativeTol 21	step 5	
hbprecond_solver 25	relharmvec 12	stimuli 14	
krylov_size 27	resgmrescycle 24	stop 2	

© 2003-2020 All Rights Reserved.

Reliability Analysis (reliability)

Description

This analysis computes the reliability for MOSFETs and the circuit. The three reliability modules are:

- MOSFET Hot-Carrier Injection (HCI) module

  Predicts transistor and circuit performance degradation due to HCI effects

- PMOSFET Negative Bias Temperature Instability (NBTI) module:

  Predicts PMOSFET and circuit performance degradation due to NBTI and NBTI recovery effects

- NMOSFET Positive Bias Temperature Instability (PBTI) module:

  Predicts NMOSFET and circuit performance degradation due to PBTI effects

Synopsis:

```
name reliability  <global options> {
      <reliability control statements> ...
      <stress simulation statements> ...
      <aging testbench statements> ...
      <aging/post-stress simulation statements> ...
}
```

Note: Starting from MMSIM10.1.0 release version, the <global options> are ignored.

The other four sections should be listed in the specified order.

Also see *Spectre Reliability Analysis* in the Spectre Classic Simulator, Spectre APS, Spectre X, and Spectre XPS User Guide.

Definition

```
Name reliability parameter=value ...
```

Parameters

1	Analysis parameters	Analysis title

© 2003-2020 All Rights Reserved.

2	`age time=[...]`	The time in the future when the transistor degradation and degraded SPICE model parameters are to be calculated.
3	`deltad value=0.0`	Specifies the degradation value.
4	`deltad mod=[...]`	Specifies the name of a model whose lifetime is calculated. The model name must be the same as that specified in the .model card.
5	`maskdev type=include`	Includes or excludes the specified devices or the devices that belong to the listed subcircuit or model during reliability analysis. Possible values are `include` and `exclude`.
6	`deg_ratio type=include`	Includes or excludes the specified devices for built-in agemos model. Possible values are `include` and `exclude`.
7	`deg_ratio dev=[...]`	Specifies the instances to be included or excluded for degradation ratio for built-in agemos model.
8	`maskdev mod=[...]`	Specifies the models for which the related devices should be included or excluded while performing reliability analysis.
9	`maskdev dev=[...]`	Specifies the instances to be included or excluded during reliability analysis.
10	`maskdev sub=[...]`	Specifies the subcircuits for which the related devices should be included or excluded while performing reliability analysis.
11	`report_model_param value=no`	Determines whether to print the stress and aged parameters in the.bm# file. Possible values are `no` and `yes`.
12	`load_external_cmi value=no`	Load the external user-defined CMI flag. Possible values are `no` and `yes`.
13	`load_external_cmi debug=no`	The flag of outputting the debug information for loading external customer- defined CMI shared library.

© 2003-2020 All Rights Reserved.

14	`accuracy level=1`	Specifies methods to be used in the reliability simulation when performing integration and substrate current calculation. Possible values are 1 and 2.
15	`minage value=0.0`	Specifies the smallest age value for which degraded SPICE model parameters are calculated.
16	`igatemethod type=calc`	Specifies the method used for obtaining the gate currents of MOSFETs. Possible values are `calc` and `spice`.
17	`idmethod type=ids`	Specifies how the simulator obtains the drain current (Id) of MOSFETs to perform reliability calculations. Possible values are `ids` (Ids static current), `idrain` (dynamic gate current), and `idstatic` (terminal static current).
18	`dumpagemodel file`	Output file name of dump age model.
19	`dumpagemodel dev=[...]`	Specifies the instances whose aged modelcard will be output.
20	`urilib file`	Specifies URI library file name.
21	`urilib uri_mode=scaleparam`	Specifies which method should be used to perform aging simulation. appendage mode is not supported in the MMSIM10.1.0 release. Possible values are `agemos`, `appendage`, `scaleparam`, `new_appendage`, `new_appendage1`, and `appendage2`.
22	`urilib debug=0`	Specifies the debug mode for URI library. The value can be 0 or 1. When specified, a flag is added to the URI library indicating whether the debug information should be printed. debugMode=1 prints debug messages. The default value is `0`.
23	`relxtran start=0.0`	Specifies the start time of reliability analysis during transient simulation.

© 2003-2020 All Rights Reserved.

24	`relxtran stop=0.0`	Specifies the stop time of reliability analysis during transient simulation. If stop_time is not specified, the software stops in .tran statement.
25	`isubmethod type=calc`	Specifies the method used for obtaining the substrate currents of MOSFET. Possible values are `calc` and `spice`.
26	`opmethod type=calc`	Specifies whether the Igate or Isub value should be obtained from the SPICE models (such as, BSIM3 or BSIM4) or whether the internal Igate or Isub equation should be used. Possible values are `calc` and `spice`.
27	`degsort threshold=0.0`	Prints MOS transistors based on the threshold and number settings. The results are sorted in the descending order of degradation.
28	`degsort number=0`	Prints only the specified number of transistors having the highest degradations. For example, if number=100, the software will print the first 100 transistors with highest degradations.
29	`agelevelonly value=[...]`	Sets the level for reliability analysis, which is essentially the age level number of the reliability analysis to be performed.
30	`gradual_aging_agestep type=lin`	Sets the type of agestep, linear or logarithm, the default type is linear. Possible values are `lin` and `log`.
31	`gradual_aging_agestep start=0`	Specifies the start time of agestep in gradual aging flow, the default value is `0`.
32	`gradual_aging_agestep stop=0`	Specifies the stop time of agestep in gradual aging flow.
33	`gradual_aging_agestep total step=1`	Specifies the total step numbers of agestep in gradual aging flow.

© 2003-2020 All Rights Reserved.

34	`gradual_aging_agepoint points=[...]`	Specifies points of agepoints.
35	`gradual_aging_save steps=[...]`	Save the specified step of gradual aging result files.
36	`gradual_aging_save savedatainseparatedir`	Dump the waveform files in a separate directory for gradual aging result files. Possible values are `no` or `yes`.
37	`gradual_aging_alter_times=[...]`	Set time for gradualAging alter.
38	`gradual_aging_alter_params=[...]`	Set params for gradualAging alter.
39	`gradual_aging_alter_values=[...]`	Set values for gradualAging alter.
40	`simmode type`	Mode of reliability analysis. Possible values are `stress`, `aging`, and `all`.
41	`simmode file`	File of simMode.
42	`simmode tmifile`	Input file for TMI Aging flow.
43	`macrodevice sub=[...`	Specifies the instances for macrodevice.
44	`combinedeg value=no`	Determines whether to combine the external URI results with internal URI results in the bo0 file. Possible values are `no` and `yes`.
45	`keep_aged_data value=yes`	Determines whether to keep the value of the aged model parameters after reliability analysis. Possible values are `no` and `yes`.
46	`check_neg_aging type=error`	Specifies the message type to check the negative value in bt0. Possible values are `error`, `warn`, and `ignore`. Default is `error`.
47	`check_neg_aging clamp=no`	Clamps the negative age value in the bt0 file. Possible values are `no` and `yes`.
48	`enable_native_age value=no`	Enable the negative age value. Possible values are `no` and `yes`.

© 2003-2020 All Rights Reserved.

49	`output_binary_file value=no`	Specifies reliability analysis output file format. Possible values are `no` and `yes`.
50	`deg_ratio hci=1.0`	The degradation ratio for HCI effect.
51	`deg_ratio nbti=1.0`	The degradation ratio for NBTI effect.
52	`deg_ratio pbti=1.0`	The degradation ratio for PBTI effect.
53	`deg_ratio bti=1.0`	The degradation ratio for NBTI/PBTI effect.
54	`type_urilib append=inline`	Compatibility with RelXpert. Possible values are `inline`, `sub`, and `dev`.
55	`enable_ade_process value=no`	Enables reliability in ADE. Possible values are `no` and `yes`.
56	`output_op_degrad type=agemos`	Specify the type of output_op_degrad. Possible values are `agemos` and `appendage`
56	`macrodevice type=appendparams`	Specifies the instances for macrodevice. Possible values are `appendparams` and `agemos`.
57	`tmi_aging_mode type`	Mode of tmi aging flow. Possible values are `aging`, `she`, and `all`.
58	`output_region_param value=no`	Prints the region method of the parameter. Possible values are `no` and `yes`.
59	`tmi_she_mindtemp value=0.0`	The minimun delta temperature of self-heating.
60	`enable_tmi_uri value=no`	Enable the TMI and URI flow. Possible values are `no` and `yes`.
61	`fast_aging_mode type`	Mode of XPS native reliability. Possible values are `agemos` and `ratio`.
62	`aging_analysis_name value=no`	Aging analysis name. Possible values are `tran`, `dc`, and `ac`.

© 2003-2020 All Rights Reserved.

63	`deg_ratio hcin=1.0`	The degradation ratio for NMOS HCI effect. **Note:** This option is for TMI aging flow only.
64	`deg_ratio hcip=1.0`	The degradation ratio for PMOS HCI effect. **Note:** This option is for TMI aging flow only.
65	`deg_ratio btin=1.0`	The degradation ratio for PBTI effect. **Note:** This option is for TMI aging flow only.
66	`deg_ratio btip=1.0`	The degradation ratio for NBTI effect. **Note:** This option is for TMI aging flow only.
67	`output_device_degrad vdd=[...]`	Sets the bias voltage for the device degradation.
68	`output_device_degrad tmi_lib_inc`	Sets the TMI library include/section for gm/gds degradation.
69	`deltad item`	Specifies the electrical parameter for lifetime estimation. It is only available for TMI aging flow. Possible values are `didsat`, `didlin`, `dvtlin`, and `lifetime`.
70	`degsort item=0`	Specifies which item is used for sorting. It is only available for TMI aging flow.
71	`output_device_degrad vdlin=[...]`	Sets the bias voltage of vdlin for the device degradation.
72	`output_device_degrad vgsat=[...]`	Sets the bias voltage of vgsat for the device degradation.
73	`output_device_degrad vglin=[...]`	Sets the bias voltage of vglin for the device degradation.
74	`degsort phys`	Specify which reliability effect should be used for sorting. It is only available for TMI aging flow. Possible values are `hci_bti`, `hci`, and `bti`.
75	`output_inst_param list=[...]`	Specify the parameter names to be output into bo0 or psf file.

© 2003-2020 All Rights Reserved.

76	`degradation_check_exception file`	Set degradation check exception list.
77	`degradation_check type`	Specify the message type(warning or error) for degradation_check. Possible values are `warn` and `error`.
78	`degradation_check parameter`	Specify the degradation_check parameter's name. Possible values are `deltad`, `dvth`, `didlin`, `didsat`, `did`, `dgm`, and `dgds`.
79	`degradation_check value=DBL_MAX`	Specify the degradation_check value.
80	`degradation_check agelevel=-1`	Specify the degradation_check agelevel.
81	`degradation_check error`	Set degradation check error message output file.
82	`degradation_check_output file`	Set degradation check result output file.
83	`rel_mode type`	Specifies the analysis type used for obtaining the device reliability values.
84	`rel_mode tmode`	Specifies the temperature mode. Possible values are `static` and `dynamic`.
85	`gradual_aging_with_deg value=no`	Call `calcDegradation` before `calcAge` in gradual aging flow. Possible values are `no` and `yes`.
86	`degradation_check sub=[...]`	Set subckt for degradation check.
87	`degradation_check dev=[...]`	Set device for degradation check.
88	`degradation_check mod=[...]`	Set model for degradation check.
89	`output_she_power value=no`	Output device power in SHE flow. Possible values are `no` and `yes`.
90	`enable_tmishe_uri value=no`	Enable TMI and URI flow and pass dtemp of TMI into URI. Possible values are `no` and `yes`.

© 2003-2020 All Rights Reserved.

91	`skip_tmi_aging_she_tran value`	The flag whether to run transient of aging+SHE. Possible values are `no` and `yes`.
92	`output_device_degrad file`	Specifies file included output_device_degrad options.
93	`vdsmethod type=external`	Specifies to get external or internal voltage of Vds. Possible values are `external` and `internal`.
94	`output_device_degrad skipaging=no`	Output bt0 file and skip aging analysis for saving time. Possible values are `no` and `yes`.
95	`deg_table_line_break value=yes`	Specifies whether to break line when device name is too long in degradation table.Possible values are `no` and `yes`.
96	`param_output_inst_param sort`	Specify the parameter name, whose value is used to sort output order.
97	`params_output_inst_param sum=[...]`	Specify the parameter names, the sum of them values is output file.
98	`output_subckt_degrad vdd=[...]`	Sets the bias voltage for the subckt degradation.
99	`output_subckt_degrad vdlin=[...]`	Sets the bias voltage of vdlin for the subckt degradation.
100	`output_subckt_degrad vgsat=[...]`	Sets the bias voltage of vgsat for the subckt degradation.
101	`output_subckt_degrad vglin=[...]`	Sets the bias voltage of vglin for the subckt degradation.
102	`output_subckt_degrad sub=[...]`	Sets the subckt name to do subckt degradation.

© 2003-2020 All Rights Reserved.

103	`output_subckt_degrad node=[...]`	Sets subckt terminal nodes mapping to drain, gate, source and bulk for subckt degradation.
104	`enable_tmi_uri tmishe=no`	Enable TMI and URI flow and pass dtemp of TMI into URI.Possible values are `no` and `yes`.
105	`output_subckt_degrad file`	Specifies file included output_subckt_degrad options.
106	`output_subckt_degrad ivthp=0.0`	Sets PMOS vth current, it has higher priority than ivth defined in global option.
107	`output_subckt_degrad ivthn=0.0`	Sets NMOS vth current, it has higher priority than ivth defined in global option.
108	`output_subckt_degrad ivth=[...]`	Sets constant vth current for specified model.
109	`degsort value=no`	Specifies to enable to sort degradation data in decreasing order. Possible values are `no` and `yes`.
110	`agelevelonly type=include`	Includes or excludes the specified aging levels. Possible values are `include` and `exclude`.
111	`preset age=0.0`	Specifies age value for preset.
112	`preset agelevel`	Specifies age level for preset.
113	`preset mod=[...]`	Specifies model list for preset.
114	`preset dev=[...]`	Specifies device list for preset.
115	`preset deg=0.0`	Specifies degradation value for preset.
116	`preset lifetime=0.0 s`	Specifies lifetime value (unit is second) for preset.
117	`preset sub=[...]`	Specifies subckt list for preset.
118	`urilib scale_mode=original`	

© 2003-2020 All Rights Reserved.

Specifies parameter scale mode for URI library. The value can be original or effective. If value is original, send original parameter value to URI for param scale, else send effective value.
Possible values are `original` and `effective`.

119 `gradual_aging_pass_param value=no`

Whether to pass URI instance state to next gradual aging step.
Possible values are `no` and `yes`.

120 `gradual_aging_early_exit value=no`

Whether to enable early exit in gradual aging flow.
Possible values are `no` and `yes`.

121 `win_relxtran mult=[...]`

Specifies multiple time windows for reliability analysis.

122 `gradual_aging_early_exit time`

Gradual aging time from which early exit is triggered.

123 `output_subckt_degrad correct_bias_voltage=yes`

Specifies whether to correct the sign of voltage bias defined in output_subckt_degrad for reliability analysis.
Possible values are `no` and `yes`.

124 `output_device_degrad correct_bias_voltage=yes`

Specifies whether to correct the sign of voltage bias defined in output_device_degrad for reliability analysis.
Possible values are `no` and `yes`.

125 `bias_voltage_output_device_degrad output=no`

Specifies whether to output the model names and their bias conditions defined in output_device_degrad to bt0 and bt0.dpl files.
Possible values are `no` and `yes`.

© 2003-2020 All Rights Reserved.

126	`output_device_degrad keep_zero_result`	Output all the devices included devices of zero degradation in bt0 file. Possible values are `no` and `yes`.

Detailed Description and Examples:

`age time=[...]`

The duration in the future at which the transistor degradation and degraded SPICE model parameters are to be calculated. The degraded SPICE model parameters are used in aged circuit simulation. The calculated transistor degradation can be transconductance, linear or saturation drain current, degradation, threshold voltage shift, and or any other degradation monitor. While specifying the value, attach the suffix y (year), h (hour), or m (minute). There should be no space between the number and the suffix. For example, 10m, 1e-5sec. Note: Currently, specifying multiple time values is not supported.

`deltad value=<deltad_value>`

Requests the calculation of lifetime for each transistor under the circuit operating conditions by using the specified degradation value. You can use multiple deltad statements for different types of transistors. The degradation value can be transconductance, linear or saturation drain current degradation, threshold voltage shift, or any other degradation monitor, depending on the definitions of the lifetime parameters H and m. deltad_value can be in decimal notation (xx.xx) or in engineering notation (x.xxe+xx).

```
maskdev type={include | exclude} {sub=<subckt_list> |
mod=<model_list> | dev=<device_list>}
```

Includes or excludes the specified devices or the devices that belong to the listed subcircuit or model during reliability analysis.

Note: Starting from MMSIM10.1, the include and exclude values are mutually exclusive.

`report_model_param value={yes | no}(defaults to no)`

Determines whether to print the stress and aged parameters in the.bm# file. Possible values are yes and no. When set to yes, the stress and aged parameters are printed to the .bm# file.

`accuracy level={1 | 2}(defaults to 1)`

Specifies methods used in the reliability simulation when performing integration and substrate current calculation. In other words, specifies trapezoidal integration when performing

© 2003-2020 All Rights Reserved.

integrations and calculates Isub for Vgs < Vth. When set to 1, the software uses backward Euler integration and sets Isub=0 when Vgs < Vth. When set to 2, the software uses trapezoidal integration and calculates Isub when Vgs < Vth. Setting accuracy to 2 is more accurate, but increases simulation time when compared to when accuracy is set to 1.

`minage value=<minage_value>`

Specifies the smallest Age value for which degraded SPICE model parameters are calculated. This statement speeds up aging calculation by using stress SPICE model parameters if the transistor Age value is smaller than the specified `minage_value`. `minage_value` can be in decimal notation (xx.xx) or in engineering notation (x.xxe+xx).

`igatemethod type={calc | spice}(defaults to calc)`

Specifies the method used for obtaining the gate terminal current of a MOSFET. During MOSFET HCI simulation, the gate terminal current is required for calculating the degradation value. The simulator can either calculate this value or obtain it from the SPICE output rawfile, if the SPICE simulator in use provides such an option. If this command is not used, the simulator calculates the gate terminal current by using its own model parameters. Possible values are calc (default) and spice. When calc is specified, the gate terminal current is calculated using the model parameters, and when spice is specified, the gate terminal current value is obtained from the SPICE output rawfile.

`idmethod type={ids | idrain}(defaults to ids)`

Specifies how the simulator obtains the drain current (Id) to perform reliability calculations. The following types of drain currents, which are available from SPICE, are supported by reliability analysis:

* Dynamic drain current (also called AC drain current)- the current that flows into the drain node.

* Static drain current (also called channel drain current, DC drain current, or Ids)- Possible values are ids (Ids static current) or idrain (dynamic drain current). The default is ids.

`uri_lib file={"filename"} uri_mode={agemos | appendage} debug={0 | 1}`

Loads the Unified Reliability interface (URI) shared library and specifies which method (`uri_mode`) should be used to perform aging simulation.

Note: `appendage` mode is not supported in the MMSIM10.1 release.

`relx_tran start=<start_time> stop=<stop_time>`

© 2003-2020 All Rights Reserved.

Specifies the start and stop time for reliability analysis during transient analysis. If `stop_time` is not specified, the software stops in .tran statement.

```
isubmethod type={calc | spice}(defaults to calc)
```

Specifies the method used for obtaining substrate terminal current of a MOSFET. During MOSFET HCI simulation, the substrate terminal current is required for calculating the degradation value. The Spectre RelXpert simulator can either calculate this value or obtain it from the SPICE output rawfile, if the SPICE simulator in use provides such an option. If this command is not used, the simulator calculates the substrate terminal current by using its own model parameters. Possible values are calc (default) and spice. When calc is specified, the substrate terminal current is calculated using the model parameters, and when spice is specified, the substrate terminal current value is obtained from the SPICE output rawfile.

```
opmethod type={calc | spice}(defaults to calc)
```

Specifies whether the Igate or Isub value should be obtained from the SPICE models (for example, BSIM3 or BSIM4) or the internal Igate or Isub equation should be used. Possible values are calc or spice. calc calculates the gate and substrate terminal current by using the Cadence Igate and Isub model equations (default). spice obtains the gate and substrate terminal current value from the SPICE model.

```
degsort {threshold=<threshold_value> | number=<number_value>}
```

Prints MOS transistors based on the threshold value or number settings. The results are sorted in the descending order of degradation.

Note: The threshold and number arguments are mutually exclusive. Therefore, only one of them can be specified with degsort to print the sorted device degradation results. When threshold_value is specified, the transistors that have degradation values greater than the threshold value are printed. The threshold value can be in decimal notation (xx.xx) or in engineering notation (x.xxe+xx). When number_value is specified, only the first <number_value> transistors having the highest degradations are printed. For example, if number=100, the software will print the first 100 transistors with highest degradations.

```
agelevel_only value=[<level_value> <model_list>, <level_value>
<model_list>, ...]
```

Specifies the age level for performing reliability analysis on the specified models. You can specify different age levels for different set of models.

Note: This option also supports the URI-defined agelevel statement. If model names are not specified, the simulation is performed on all the devices at the specified age level. The following levels can be used to specify Cadence internal ageMOS models:

© 2003-2020 All Rights Reserved.

* 1: Specifies HCI reliability analysis.

* 2: Specifies NBTI reliability analysis.

* 3: Specifies PBTI reliability analysis.

Example:

```
    rel reliability {
        // reliability control statements
        age time = [10h 20y 30y]
        deltad value = 0.1
        accuracy level = 2
        agelevel_only value=[0 nch, 1 pch]
        relx_tran start=1us stop=10us
        idmethod type=idrain
        maskdev type=include mod=[pch] dev=[mdut6] sub=[inv]
        minage value = 0.00001
        report_model_param value=yes
        uri_lib file="./libURI.so" uri_mode=agemos debug=1
        degsort number=100
        igatemethod type=spice
        isubmethod type=spice
        opmethod type=spice
        // stress/stress statements.
        tran_stress tran start=0 step=1us stop=10us
        // aging testbench statements.
        change1 alter param=rel_temp value=125
        // aging simulation statements.
        tran_aged tran start = 0 step = 1us stop = 10us
}
```

Parameter Index

In the following index, the number corresponding to each parameter name indicates where to find the description of that parameter:

Analysis parameters 1	degsort number 28	keep_aged_data value 45	output_subckt_degrad vdlin 99

© 2003-2020 All Rights Reserved.

accuracy level 14
age time 2
agelevel_only value 29
agelevelonly type 110
aging_analysis_name value 62
bias_voltage_output_device_degrad output 125
check_neg_aging clamp 47
check_neg_aging type 46
combinedeg value 44
deg_ratio bti 53
deg_ratio btin 65
deg_ratio btip 66
deg_ratio dev 7
degsort phys 74
degsort threshold 27
degsort value 109
deltad item 69
deltad mod 4
deltad value 3
dumpagemodel dev 19
dumpagemodel file 18
enable_ade_process value 55
enable_negative_age value 48
enable_tmi_uri tmishe 104
enable_tmi_uri value 60
enable_tmishe_uri value 90
load_external_cmi debug 13
load_external_cmi value 12
macrodevice sub 43
macrodevice type 56
maskdev dev 9
maskdev mod 8
maskdev sub 10
maskdev type 5
minage value 15
opmethod type 26
output_binary_file value 49
output_device_degrad correct_bias_voltage 124
output_device_degrad file 92
output_subckt_degrad vglin 101
output_subckt_degrad vgsat 100
param_output_inst_param sort 96
params_output_inst_param sum 97
preset age 111
preset agelevel 112
preset deg 115
preset dev 114
preset lifetime 116
preset mod 113
preset sub 117
rel_mode tmode 84
rel_mode type 83

© 2003-2020
All Rights Reserved.

deg_ratio hci 50
deg_ratio hcin 63
deg_ratio hcip 64
deg_ratio nbti 51
deg_ratio pbti 52
deg_ratio type 6
deg_table_line_break value 95
degradation_checkagelevel 80
degradation_checkdev 87
degradation_checkerror 81
degradation_checkmod 88
fast_aging_mode type 61
gradual_aging_agepoint points 34
gradual_aging_agestep start 31
gradual_aging_agestep stop 32
gradual_aging_agestep total_step 33
gradual_aging_agestep type 30
gradual_aging_alter param 38
gradual_aging_alter time 37
gradual_aging_alter value 39
gradual_aging_early_exit time 122
gradual_aging_early_exit value 120
output_device_degrad keep_zero_result 126
output_device_degrad skipaging 94
output_device_degrad tmi_lib_inc 68
output_device_degrad vdd 67
output_device_degrad vdlin 71
output_device_degrad vglin 73
output_device_degrad vgsat 72
output_inst_paramlist 75
output_region_param value 58
output_she_power value 89
output_subckt_degrad correct_bias_voltage 123
relxtran start 23
relxtran stop 24
report_model_param value 11
simmode file 41
simmode tmifile 42
simmode type 40
skip_tmi_aging_she_tran value 91
tmi_aging_mode type 57
tmi_she_mindtemp value 59
type_urilib append 54
urilib debug 22

© 2003-2020 All Rights Reserved.

degradation_check parameter 78
gradual_aging_pass_param value 119
output_subckt_degrad file 105
urilib file 20

degradation_check sub 86
gradual_aging_save savedatainseparatedir 36
output_subckt_degrad ivth 108
urilib scale_mode 118

degradation_check type 77
gradual_aging_save steps 35
output_subckt_degrad ivthn 107
urilib uri_mode 21

degradation_check value 79
gradual_aging_with_deg value 85
output_subckt_degrad ivthp 106
vdsmethod type 93

degradation_check_exception file 76
idmethod type 17
output_subckt_degrad node 103
win_relxtran mult 121

degradation_check_output file 82
igatemethod type 16
output_subckt_degrad sub 102

degsort item 70
isubmethod type 25
output_subckt_degrad vdd 98

© 2003-2020
All Rights Reserved.

Deferred Set Options (set)

Description

The deferred set options statement sets or changes various program control options. You can set the options in any order, and, once set, the options retain their value until reset. The set statement is queued with all analyses and is executed sequentially (The changes made to these options are deferred until the statement setting them is encountered). To set `temp`, `tnom`, `scalem`, or `scale`, use the alter statement. For further options, see individual analyses.

Also see *The set Statement* in the Spectre Classic Simulator, Spectre APS, Spectre X, and Spectre XPS User Guide.

Definition

```
Name set parameter=value ...
```

Parameters

Tolerance parameters

1	`reltol=0.001`	Relative convergence criterion.
2	`residualtol=1.0`	Tolerance ratio for residual (multiplies reltol).
3	`vabstol=1.0e-6 V`	Voltage absolute tolerance convergence criterion.
4	`iabstol=1.0e-12 A`	Current absolute tolerance convergence criterion.

Temperature parameters

5	`tempeffects=all`	Temperature effect selector. If tempeffect = vt, only thermal voltage varies with temperature; if tempeffect = tc, parameters that start with tc are active and thermal voltage is dependent on temperature; and if tempeffect = all, all built-in temperature models are enabled. Possible values are `vt`, `tc`, and `all`.

© 2003-2020 All Rights Reserved.

Convergence parameters

6	`homotopy=all`	Method used when no convergence on initial attempt of DC analysis. You can specify methods and their orders by giving vector setting such as homotopy=[source ptran gmin]. Possible values are `none`, `gmin`, `source`, `dptran`, `ptran`, `arclength`, `tranrampup`, and `all`.
7	`newton=normal`	Method used on DC analysis. Users can specify methods newton=[none | normal], and the default value is normal. Possible values are `none` and `normal`.
8	`limit=dev`	Limiting algorithms to aid DC convergence. Possible values are `delta`, `log`, `dev`, and `12`.
9	`gmethod=dev`	Stamp gdev, gnode or both in the homotopy methods (other than dptran). See below for more information. Possible values are `dev`, `node`, and `both`.
10	`dptran_gmethod=node`	Stamp gdev, gnode, or both in the dptran (homotopy) methods. Possible values are `dev`, `node`, and `both`.
11	`try_fast_op=yes`	This feature often speeds up the DC solution. For hard to converge designs, this feature fails and other methods are applied. In corner cases, this feature may have negative effects. If the DC analysis is unusually slow or if the memory usage of various processes keeps growing or if DC gets stuck even before homotopy methods start, try setting this option to no. Possible values are `no` and `yes`.

Component parameters

12	`compatible=spectre`	Encourage device equations to be compatible with a foreign simulator. This option does not affect input syntax. Possible values are `spectre`, `spice2`, `spice3`, `cdsspice`, `hspice`, `spiceplus`, `eldo`, `sspice`, `mica`, `tispice`, and `pspice`.
13	`approx=no`	Use approximate models. Difference between approximate and exact models is mostly small. Possible values are `no` and `yes`.

© 2003-2020 All Rights Reserved.

Error-checking parameters

14	`diagnose=no`	Print additional information that might help diagnose accuracy and convergence problems. Possible values are `no` and `yes`.
15	`opptcheck=yes`	Check operating point parameters against soft limits. Possible values are `no` and `yes`.

Resistance parameters

16	`gmin=1e-12 S`	Minimum conductance across each nonlinear device.
17	`gmin_check=max_v_only`	Specifies that effect of `gmin` should be reported if significant. Possible values are `no`, `max_v_only`, `max_only`, and `all`.
18	`gmindc=1e-12 S`	Minimum conductance across each nonlinear device in DC analysis.If gmindc is not given explicitly, the value of gmindc will be equal to gmin.Default value is `1.0e-12`.
19	`rforce=1 Ω`	Resistance used when forcing nodesets and node-based initial conditions.

Quantity parameters

20	`quantities=no`	Print quantities. If quantities=min, the simulator prints out all defined quantities; if quantities=full, the simulator also prints a list of nodes and their quantities. Possible values are `no`, `min`, and `full`.

Annotation parameters

21	`narrate=yes`	Narrate the simulation. Possible values are `no` and `yes`.
22	`annotate=no`	Degree of annotation. Possible values are `no` and `title`.

© 2003-2020 All Rights Reserved.

23	`debug=no`	Give debugging messages. Possible values are `no` and `yes`.
24	`info=yes`	Give informational messages. Possible values are `no` and `yes`.
25	`note=yes`	Give notice messages. Possible values are `no` and `yes`.
26	`maxnotes=5`	Maximum number of times a notice is issued per analysis. **Note:** This option has no effect on notices issued as part of parsing the netlist. Use the -maxnotes command-line option to control the number of all notices issued.
27	`warn=yes`	Give warning messages. Possible values are `no` and `yes`.
28	`maxwarns=5`	Maximum number of times a warning message is issued per analysis. **Note:** This option has no effect on warnings issued as part of parsing the netlist. Use the -maxwarns command-line option to control the number of all warnings issued.
29	`maxwarnstologfile=5`	Maximum number of times a warning message is printed to the log file per analysis. **Note:** This option has no effect on warnings printed as part of parsing the netlist. Use the -maxwarnstolog command-line option to control the number of all warnings printed to the log file.
30	`maxnotestologfile=5`	Maximum number of times a notice message is printed to the log file per analysis. **Note:** This option has no effect on notices printed as part of parsing the netlist. Use the -maxnotestolog command-line option to control the number of all notices printed to the log file.
31	`error=yes`	Generates error messages. Possible values are `no` and `yes`.
32	`digits=5`	Number of digits used when printing numbers.

© 2003-2020 All Rights Reserved.

33	`measdgt=0`	Number of decimal digits in floating point numbers in measurement output in mt0 format.
34	`notation=eng`	The notation to be used for displaying real numbers to the screen. Possible values are `eng`, `sci`, or `float`.

Matrix parameters

35	`pivotdc=no`	Use numeric pivoting on every iteration of DC analysis. Possible values are `no` and `yes`.
36	`pivrel=0.001`	Relative pivot threshold.
37	`pivabs=0`	Absolute pivot threshold.
38	`preorder=partial`	Try this option when simulation runs out of memory or if the simulation is unreasonably slow for the size of your design. It controls the amount of matrix preordering that is done and may lead to much fewer matrix fill-ins in some cases. Known cases include designs with large number of small resistors and large number of behavioral instances containing voltage based equations. Possible values are `partial` and `full`.
39	`limit_diag_pivot=yes`	If set to yes, there is a limit on the number of matrix fill-ins when selecting a pivot from a diagonal. For backward compatibility set this to no. Possible values are `no` and `yes`.
40	`rebuild_matrix=no`	If yes, rebuild circuit matrix at the beginning of ac, acmatch, dc, dcmatch, montecarlo, pz, stb, sweep, tdr, and tran analyses. This is to ensure consistent matrix ordering at the beginning of the analyses for consistent results. Notice that rebuild circuit matrix can incur performance overhead. Possible values are `no` and `yes`.
41	`icversion=1`	Convert initial condition to initial guess, when .ic statements exist in netlist and there are no other options to set IC or nodeset.

© 2003-2020 All Rights Reserved.

42	`minstepversion=1`	Minstep algorithm flow control. If `minstepversion=0`, desperate big jump is taken when minstep is reached. If `minstepversion=1`, a forward/backward search algorithm is taken to find a converged solution at small step size. By default, minstepversion=1.
43	`try_hard_in_disaster=yes`	When `minstepversion=1`, this option means whether simulator should try hard to search for a converged solution in disaster stage. Possible values are `no` and `yes`.

Parameter Index

In the following index, the number corresponding to each parameter name indicates where to find the description of that parameter:

annotate 22
approx 13
compatible 12
debug 23
diagnose 14
digits 32
dptran_gmethod 10
error 31
gmethod 9
gmin 16
gmindc 18
homotopy 6
iabstol 4
icversion 41
info 24
limit 8
limit_diag_pivot 39
maxnotes 26
maxnotestologfile 30
maxwarns 28
measdgt 33
minstepversion 42
narrate 21
newton 7
notation 34
note 25
opptcheck 15
pivabs 37
pivotdc 35
pivrel 36
quantities 20
rebuild_matrix 40
reltol 1
residualtol 2
rforce 19
tempeffects 5
try_fast_op 11
try_hard_in_disaster 43
vabstol 3
warn 27

© 2003-2020 All Rights Reserved.

gmin_check 17
maxwarnstologfile 29
preorder 38

© 2003-2020
All Rights Reserved.

Shell Command (shell)

Description

The shell analysis passes a command to the operating system command interpreter given in the SHELL environment variable. The command behaves as if it were typed into the command interpreter, except that any %X codes in the command are expanded first.

The default action of the shell analysis is to terminate the simulation.

Definition

```
Name shell parameter=value ...
```

Parameters

1	`cmd="kill %P"`	Shell command.
2	`iferror=quit`	Action to be taken if the command returns nonzero error status. Possible values are `continue` and `quit`.
3	`annotate`	Degree of annotation. Possible values are `no`, `title`, and `yes`.

© 2003-2020 All Rights Reserved.

S-Parameter Analysis (sp)

Description

The S-parameter analysis linearizes the circuit about the DC operating point and computes S-parameters of the circuit taken as an N-port. The port statements define the ports of the circuit. Each active port is turned on sequentially, and a linear small-signal analysis is performed. Spectre converts the response of the circuit at each active port into S-parameters and outputs these parameters. There must be at least one active port statement in the circuit.

S-parameter analysis can output an ASCII model file that can later be read-in by a `nport` component. The file name and the model type can be specified by `file` and `paramtype` parameters, respectively. Currently, only paramtype=s and paramtype=y are supported, for the other possible values of paramtype, the file still generates S-parameters. The text format can be either Spectre native or Touchstone.

Spectre supports sprobes in sp analysis. Sprobe is a special testbench to allow in-situ probing of bi-directional impedances. If the `sprobes` parameter is specified, the parameters S1, S2, Z1, Z2, StabIndex of the specified sprobe will be computed and outputted to rawfile. Here S1 is the scattering parameter looking left from the sprobe; S2 is the scattering parameter looking right from the sprobe; Z1 is the impedance looking left from the sprobe; Z2 is the impedance looking right from the sprobe; StabInex is the stability Index. If sprobes and ports are given, ports are used to compute normal S-param, while 'sprobes' are used to compute sprobe params.

Spectre can perform AC analysis while sweeping a parameter. The parameter can be frequency, temperature, component instance parameter, component model parameter, or netlist parameter. If changing a parameter affects the DC operating point, the operating point is recomputed at each step. You can sweep the circuit temperature by giving the parameter name as `temp`, without a `dev` or `mod` parameter. In addition, you can sweep a netlist parameter by giving the parameter name without a `dev` or `mod` parameter. After the analysis is complete, the modified parameter returns to its original value.

Definition

```
Name sp parameter=value ...
```

Parameters

1	`prevoppoint=no`	Use the operating point computed in the previous analysis. Possible values are `no` and `yes`.

© 2003-2020 All Rights Reserved.

Sweep interval parameters

2	`start=0`	Start sweep limit.
3	`stop`	Stop sweep limit.
4	`center`	Center of sweep.
5	`span=0`	Sweep limit span.
6	`step`	Step size, linear sweep.
7	`lin=50`	Number of steps, linear sweep.
8	`dec`	Points per decade.
9	`log=50`	Number of steps, log sweep.
10	`values=[...]`	Array of sweep values.
11	`valuesfile`	Name of the file containing the sweep values.

Sweep variable parameters

12	`dev`	Device instance whose parameter value is to be swept.
13	`mod`	Model whose parameter value is to be swept.
14	`param`	Name of parameter to sweep.
15	`freq (Hz)`	Frequency when parameter other than frequency is being swept.

Port parameters

16	`ports=[...]`	List of active ports. Ports are numbered in the order given.

State-file parameters

17	`readns`	File that contains an estimate of DC solution (nodeset).

© 2003-2020 All Rights Reserved.

18	`write`	DC operating point output file at the first step of the sweep.
19	`writefinal`	DC operating point output file at the last step of the sweep.

Initial condition parameters

20	`force=none`	The set of initial conditions to use. Possible values are `none`, `node`, `dev`, and `all`.
21	`readforce`	File that contains initial conditions.
22	`skipdc=no`	Skip DC analysis. Possible values are `no` and `yes`.
23	`useprevic=no`	If set to `yes` or `ns`, use the converged initial condition from previous analysis as ic or ns. Possible values are `no`, `yes`, and `ns`.

Output parameters

24	`file`	Output file name.
25	`mode="ss"`	S-parameters mode selector. Can be `mm` for mixed-mode.
26	`datafmt=spectre`	Data format of the S-parameter output file. Possible values are `spectre`, `touchstone`, and `touchstone2`.
27	`paramtype=s`	Output parameter type. If set to s, the S-parameters will be output to raw data. If `file` is specified, the S-parameters will be output to the file. If set to y, both S-parameters and Y-parameters will be output to raw data. If `file` is specified, the normalized Y-parameters will be output to the file. If set to z, the behavior is similar to y. If set to yz, then S-parameters, Y-parameters, and Z-parameters will be output to raw data. However, if `file` is specified, only the S-parameters will be output to the file. Possible values are `s`, `y`, `z`, and `yz`.
28	`datatype=realimag`	Data type of the S-parameter output file. Possible values are `realimag`, `magphase`, and `dbphase`.

© 2003-2020 All Rights Reserved.

29	`noisedata=no`	Should noise data be saved to the S-parameter output file; if yes, in what format. Possible values are `no`, `twoport`, and `cy`.
30	`oppoint=no`	Determines whether the operating point information should be computed. If `yes`, where should it be printed (screen or file). Operating point information is not printed if the operating point computed in the previous analysis remains unchanged. Possible values are `no`, `screen`, `logfile`, and `rawfile`.

Noise parameters

31	`donoise=no`	Perform noise analysis. If oprobe is specified as a valid port, this is set to yes, and a detailed noise output is generated. Possible values are `no` and `yes`.
32	`oprobe`	Compute total noise at the output defined by this component.
33	`iprobe`	Input probe. Refer the output noise to this component.

Convergence parameters

34	`restart=yes`	Restart the DC solution from scratch if any condition has changed. If not, use the previous solution as initial guess. Possible values are `no` and `yes`.

Annotation parameters

35	`annotate=sweep`	Degree of annotation. Possible values are `no`, `title`, `sweep`, `status`, and `steps`.
36	`title`	Analysis title.

© 2003-2020 All Rights Reserved.

Sprobe parameters

37	`sprobes=[...]`	List of s-probes.

If the list of active ports is specified with the `ports` parameter, the ports are numbered sequentially from one in the order given. Otherwise, all ports present in the circuit are active, and the port numbers used are those that were assigned on the port statements. If `donoise=yes` is specified, the noise correlation matrix is computed. If in addition, the output is specified using `oprobe,` the amount that each noise source contributes to the output is computed. Finally, if an input is also specified (using `iprobe`), the two-port noise parameters are computed (F, Fmin, NF, NFmin, Gopt, Bopt, and Rn).

When `datafmt=touchstone2`, Spectre outputs the file in touchstone version 2 format. Network data for y and z parameters in the touchstone version 2 format files is not normalized. However, in Spectre and touchstone version 1 format, it is normalized.

If the `mode` parameter is set to mm, differential and common-mode S-parameters (denoted as mixed-mode S-parameters) are calculated. When `mode=mm`, there must be 2N, with N > 1, active port statements in the circuit. The mixed-mode S-parameters are calculated referring to the pairing of the ports, with the port numbers ordered in pair as (1,2) (3,4), and so on in the ports list. With mm, Spectre calculates differential-to-differential, differential-to-common, common-to-differential, and common-to-common S-parameters. A combination of mixed-mode and standard S-parameters is calculated if the mode parameter is set to, say, m12m34s5. Then, additional differential-to-standard, common-to-standard, standard-to-differential, and standard-to-common S-parameters are calculated. In the example of mode=m12m34s5, the standard single-end port is port number 5, the two mixed-mode port pairs are (1,2) and (3,4); with Spectre placing restriction of the number on active ports to 5 given in the port list. `[Mixed-Mode Order]` keyword is used in the touchstone version 2 format files to describe the order of mixed-mode network parameters. For example, if mode=mode=m12m34s5, `[Mixed-Mode Order]` is set to D1,2 D3,4 C1,2 C3,4 S5.

You can define sweep limits by specifying the end points or the center value and span of the sweep. Steps can be linear or logarithmic, and you can specify the number of steps or the size of each step. You can specify a step size parameter (`step`, `lin`, `log`, or `dec`) to determine whether the sweep is linear or logarithmic. If you do not specify a step size parameter, the sweep is linear when the ratio of stop to start values is less than 10 and logarithmic when this ratio is 10 or greater. All frequencies are in Hertz.

The small-signal analysis begins by linearizing the circuit about an operating-point. By default, this analysis computes the operating-point, if it is not known, or recomputes it if any significant component or circuit parameter has changed. However, if an operating point was computed during a previous analysis, you can set `prevoppoint=yes` to avoid recomputing

© 2003-2020 All Rights Reserved.

it. For example, if `prevoppoint=yes`, and the previous analysis was a transient analysis, the operating point is the state of the circuit at the final time point.

Parameter Index

In the following index, the number corresponding to each parameter name indicates where to find the description of that parameter:

annotate 35
center 4
datafmt 26
datatype 28
dec 8
dev 12
donoise 31
file 24
force 20
freq 15
iprobe 33
lin 7
log 9
mod 13
mode 25
noisedata 29
oppoint 30
oprobe 32
param 14
paramtype 27
ports 16
prevoppoint 1
readforce 21
readns 17
restart 34
skipdc 22
span 5
sprobes 37
start 2
step 6
stop 3
title 36
useprevic 23
values 10
valuesfile 11
write 18
writefinal 19

© 2003-2020
All Rights Reserved.

Stability Analysis (stb)

Description

The STB analysis linearizes the circuit about the DC operating point and computes the loop gain and gain and phase margins (if the sweep variable is frequency) for a feedback loop or a gain device.

Spectre can perform the analysis while sweeping a parameter. The parameter can be frequency, temperature, component instance parameter, component model parameter, or netlist parameter. If changing a parameter affects the DC operating point, the operating point is recomputed at each step. You can sweep the circuit temperature by giving the parameter name as `temp`, without a `dev` or `mod` parameter. You can sweep a netlist parameter by giving the parameter name without a `dev` or `mod` parameter. After the analysis is complete, the modified parameter returns to its original value.

For additional information, see *Stability Analysis* in the *Spectre Circuit Simulator and Accelerated Parallel Simulator User Guide*.

Definition

```
Name stb parameter=value ...
```

Parameters

1	`prevoppoint=no`	Use the operating point computed on the previous analysis. Possible values are `no` and `yes`.

Sweep interval parameters

2	`start=0`	Start sweep limit.
3	`stop`	Stop sweep limit.
4	`center`	Center of sweep.
5	`span=0`	Sweep limit span.
6	`step`	Step size, linear sweep.
7	`lin=50`	Number of steps, linear sweep.

© 2003-2020 All Rights Reserved.

8	`dec`	Points per decade.
9	`log=50`	Number of steps, log sweep.
10	`values=[...]`	Array of sweep values.
11	`valuesfile`	Name of the file containing the sweep values.

Sweep variable parameters

12	`dev`	Device instance whose parameter value is to be swept.
13	`mod`	Model whose parameter value is to be swept.
14	`param`	Name of parameter to sweep.
15	`freq (Hz)`	Frequency when parameter other than frequency is being swept.

Probe parameters

15	`probe`	Probe instance around which the loop gain is calculated.
16	`localgnd`	Node name of local ground. If not specified, the probe is referenced to global ground.

State-file parameters

18	`readns`	File that contains estimate of DC solution (nodeset).
19	`write`	DC operating point output file at the first step of the sweep.
20	`writefinal`	DC operating point output file at the last step of the sweep.

© 2003-2020 All Rights Reserved.

Initial condition parameters

21	`force=none`	Which set of initial conditions to use. Possible values are `none`, `node`, `dev`, and `all`.
22	`readforce`	File that contains initial conditions.
23	`skipdc=no`	Skip the DC analysis. Possible values are `no` and `yes`.
24	`useprevic=no`	If set to `yes` or `ns`, use the converged initial condition from previous analysis as ic or ns. Possible values are `no`, `yes` and `ns`.

Output parameters

25	`save`	Signals to output. Possible values are `all`, `lvl`, `allpub`, `lvlpub`, `selected`, `none`, and `nooutput`.
26	`nestlvl`	Levels of subcircuits to output.
27	`oppoint=no`	Should operating point information be computed; if yes, where should it be sent. Operating point information would not be output if the operating point computed in the previous analysis remains unchanged. Possible values are `no`, `screen`, `logfile`, and `rawfile`.

Convergence parameters

28	`restart=yes`	Restart the DC solution from scratch if any condition has changed. If not, use the previous solution as initial guess. Possible values are `no` and `yes`.

Annotation parameters

29	`annotate=sweep`	Degree of annotation. Possible values are `no`, `title`, `sweep`, `status`, and `steps`.
30	`title`	Analysis title.

You can define sweep limits by specifying the end points or the center value and span of the sweep. Steps can be linear or logarithmic, and you can specify the number of steps or the

© 2003-2020 All Rights Reserved.

size of each step. You can specify a step size parameter (`step`, `lin`, `log`, or `dec`) to determine whether the sweep is linear or logarithmic. If you do not specify a step size parameter, the sweep is linear when the ratio of stop to start values is less than 10 and logarithmic when this ratio is 10 or greater. All frequencies are in Hertz.

The small-signal analysis begins by linearizing the circuit about an operating-point. By default this analysis computes the operating point, if it is not known, or recomputes it if any significant component or circuit parameter has changed. However, if a previous analysis computed an operating point, you can set `prevoppoint=yes` to avoid recomputing it. For example, if you use this option when the previous analysis was a transient analysis, the operating point is the state of the circuit on the final time point.

Nodesets help find the DC or the initial transient solution. You can specify nodesets in the circuit description file with nodeset statements, or in a separate file by using the `readns` parameter. When nodesets are specified, Spectre computes an initial guess of the solution by performing DC analysis, while forcing the specified values on to nodes by using a voltage source in series with a resistor whose resistance is `rforce`. Spectre then removes these voltage sources and resistors and computes the required solution from this initial guess.

Nodesets have two important uses. First, if a circuit has two or more solutions, nodesets can bias the simulator towards computing the required solution. Second, these are a convergence aid. By estimating the solution of the largest possible number of nodes, you might be able to eliminate a convergence problem or significantly speed up convergence.

When you simulate the same circuit multiple times, it is recommended that you use both the `write` and `readns` parameters and assign the same file name to both parameters. DC analysis then converges quickly even if the circuit has changed since the last simulation, and the nodeset file is automatically updated.

During the initial operating point DC analysis, you may force some of the circuit variables to the values given in the `ic` file, `ic` statements, or `ic` parameter on the capacitors and inductors. The `ic` parameter controls the interaction of the various methods for setting the force values. The effects of individual settings are as follows:

`force=none`: Any initial condition specifiers are ignored.

`force=node`: The `ic` statements are used, and the `ic` parameter on the capacitors and inductors are ignored.

`force=dev`: The `ic` parameters on the capacitors and inductors are used, and the `ic` statements are ignored.

`force=all`: Both the `ic` statements and the `ic` parameters are used, with the `ic` parameters overriding the `ic` statements.

© 2003-2020 All Rights Reserved.

If you specify an `ic` file with the `readforce` parameter, force values from the file are used, and any `ic` statements are ignored.

After you specify the initial conditions, Spectre computes the DC operating point with the specified nodes forced to the given value by using a voltage source in series with a resistor whose resistance is `rforce` (see `options`).

Understanding Loop-Based and Device-Based Algorithms

Two algorithms- loop-based and device-based are available for small-signal stability analysis. Both algorithms are based on the calculation of Bode's return ratio. Loop gain waveform, gain margin, and phase margin are the analysis output.

The `probe` parameter must be specified to perform stability analysis. When it points to a current probe or voltage source instance, the loop-based algorithm is run; when the parameter points to a supported active device instance, the device-based algorithm is run.

Loop-Based Algorithm

The loop-based algorithm calculates the true loop gain, which consists of normal loop gain and reverse loop gain. The loop-based algorithm requires the `probe` being placed on the feedback loop to identify and characterize the particular loop of interest. The introduction of the probe component should not change any of the circuit characteristics.

The loop-based algorithm provides accurate stability information for single loop circuits and also for multi-loop circuits in which a `probe` component can be placed on a critical wire to break all loops. For a general multi-loop circuit, such a critical wire may not be available. The loop-based algorithm can only be performed on individual feedback loops to ensure that they are stable. Although the stability of all feedback loops is only a necessary condition for the whole circuit to be stable, the multi-loop circuit tends to be stable if all individual loops are associated with reasonable stability margins.

For the loop based algorithm, a probe needs to be placed on the feedback loop.The common way is to insert a current probe or voltage source instance in the netlist, and the `probe` parameter points to this instance. The second way to insert the probe is by specifying the terminal of some instance.

The syntax format:

probe = X:n

© 2003-2020 All Rights Reserved.

`X` can be an instance or a subcircuit instance and `n` is the terminal index. The second way has a limitation: We can not specify a branch whose current consists of more than one instance's terminal current. A current probe or voltage source instance needs to be inserted manually.

This can be shown below:

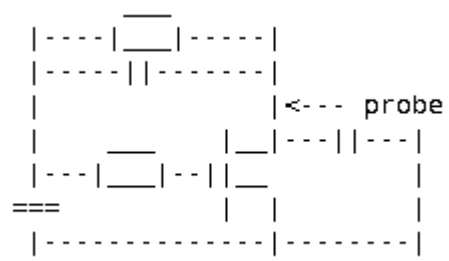

No instance can specify the probe's location.

Device-Based Algorithm

The device-based algorithm calculates the loop gain around a particular active device. This algorithm is often applied to assess the stability of circuit design in which local feedback loops cannot be neglected; the loop-based algorithm cannot be performed for these applications because the local feedback loops are inside the devices and cannot be accessed from the schematic or netlist level to insert the `probe` component.

With the `probe` parameter pointing to a particular active device, the dominant controlled source in the device is nulled during the analysis. The dominant controlled source is defined as by nulling this source renders the active device to be passive. The device-based algorithm produces accurate stability information for a circuit in which a critical active device can be identified, so that nulling the dominant gain source of this device renders the whole network passive.

© 2003-2020 All Rights Reserved.

Stability Analysis of Differential Feedback Circuits

A balanced fully differential feedback circuit is illustrated below:

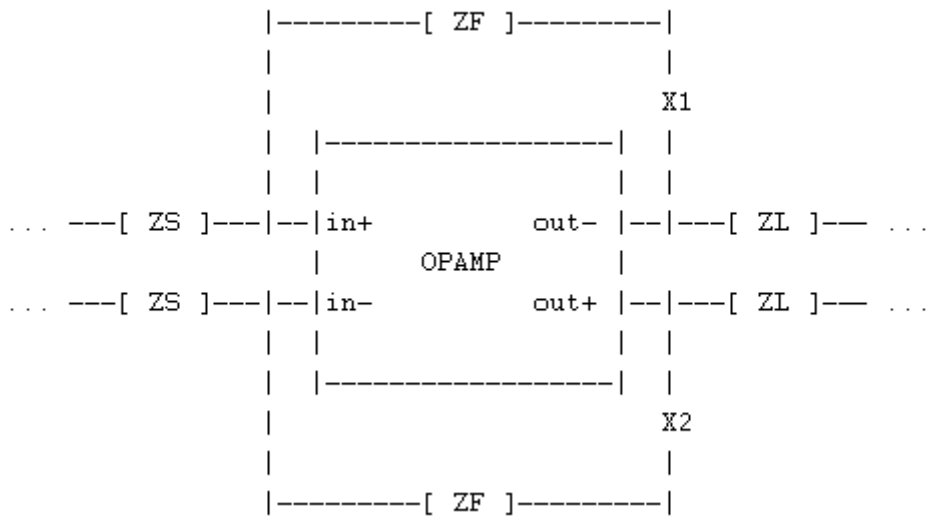

The feedback loops are broken at X1 and X2, with x1in and x2in being the input side nodes and x1out and x2out being the output side nodes. The following subcircuit connects these four nodes together:

```
subckt diffprobe x1in x2in x1out x2out
    ibranch inout x1out iprobe
    vinj inout x1in iprobe
    evinj x2in x2out x1in x1out vcvs gain=0
    fiinj 0 x2out pcccs probes=[ibranch vinj] coeffs=[0 1 1] gain=0
ends diffprobe
```

If the localgnd parameter is specified, the above subcircuit should be modified as follows:

```
subckt diffprobe x1in x2in x1out x2out localgnd
    ibranch inout x1out iprobe
    vinj inout x1in iprobe
    evinj x2in x2out x1in x1out vcvs gain=0
    fiinj localgnd x2out pcccs probes=[ibranch vinj] coeffs=[0 1 1] gain=0
ends diffprobe
```

Let `diffprobe_inst` be the instance of subcircuit `diffprobe`, the following analysis measures the differential-mode loop gain:

```
DMalterv alter dev=diffprobe_inst.evinj param=gain value=-1
DMalteri alter dev=diffprobe_inst.fiinj param=gain value=-1
```


© 2003-2020 All Rights Reserved.

```
DMloopgain stb probe=diffprobe_inst.vinj
```

and, the following analysis measures the common-mode loop gain:

```
CMalterv alter dev=diffprobe_inst.evinj param=gain value=1
CMalteri alter dev=diffprobe_inst.fiinj param=gain value=1
CMloopgain stb probe=diffprobe_inst.vinj
```

Parameter Index

In the following index, the number corresponding to each parameter name indicates where to find the description of that parameter.

annotate 29
center 4
dec 8
dev 12
force 21
freq 15
lin 7
localgnd 17
log 9
mod 12
nestlvl 26
oppoint 27
param 14
prevoppoint 1
probe 16
readforce 22
readns 18
restart 28
save 25
skipdc 23
span 5
start 2
step 6
stop 3
title 30
useprevic 24
values 10
valuesfile 11
write 18
writefinal 20

© 2003-2020
All Rights Reserved.

Reliability Stress Analysis (stress)

Definition

```
Name stress parameter=value ...
```

Parameters

1	`age_time=[...]`	The time, in future, when the transistor degradation and degraded SPICE model parameters are to be calculated.
2	`deltad=0.0`	Specifies the degradation value.
3	`deltad_mod=[...]`	Specifies the name of a model whose lifetime is calculated. The model name must be the same as specified in the.model card.
4	`deg_ratio_type=include`	Includes or excludes the specified devices or the device during TMI Aging Simulation flow. Possible values are `include` and `exclude`.
5	`deg_ratio_dev=[...]`	Specifies the instances to be included or excluded for degradation ratio for TMI Aging flow.
6	`report_model_param=no`	Determines whether to print the stress and aged parameters in the `.bm#` file. Possible values are `no` and `yes`.
7	`accuracy=1`	Specifies methods used in the reliability simulation when performing integration and substrate current calculation. Possible values are `1` and `2`.
8	`minage=0.0`	Specifies the smallest age value for which degraded SPICE model parameters are calculated.
9	`igatemethod=calc`	Specifies the method used for obtaining the gate currents of MOSFETs. Possible values are `calc` and `spice`.

© 2003-2020 All Rights Reserved.

10	`idmethod=ids`	Specifies how the simulator obtains the drain current (Id) of MOSFETs to perform reliability calculations.Possible values are `ids`, `idrain`, and `idstatic`.
11	`dumpagemodel`	Output file name of dump age model.
12	`dumpagemodel_dev=[...]`	Specifies the instances whose aged modelcard will be output.
13	`urilib_file`	Specifies URI library file name.
14	`urilib_mode=agemos`	Specifies which method should be used to perform aging simulation. **Note:** `Appendage` mode is not supported in the MMSIM10.1.0 release. Possible values are `agemos`, `scaleparam`, `appendage`, and `new_appendage`.
15	`urilib_debug=0`	Specifies the debug mode for URI library. Possible values are `0` and `1`. When specified, a flag is added to the URI library indicating whether the debug information should be printed. `debugMode=1` prints debug messages. Default value is `0`.
16	`relxtran_start=0.0`	Specifies the start time of reliability analysis during transient simulation.
17	`relxtran_stop=0.0`	Specifies the stop time of reliability analysis during a transient simulation. If `stop_time` is not specified, the software stops in `.tran` statement.
18	`isubmethod=calc`	Specifies the method used for obtaining the substrate currents of MOSFET. Possible values are `calc` and `spice`.
19	`opmethod=calc`	Specifies whether the `Igate` or `Isub` value should be obtained from the SPICE models (such as BSIM3 or BSIM4) or whether the internal `Igate` or `Isub` equation should be used. Possible values are `calc` and `spice`.
20	`degsort_threshold=0.0`	

© 2003-2020 All Rights Reserved.

		Prints MOS transistors based on the threshold and number settings. The results are sorted in the descending order of degradation.
21	`degsort_num=0`	Prints only the specified number of transistors having the highest degradations. For example, if number=100, the software will print the first 100 transistors with highest degradations.
22	`combine_deg=no`	Determines whether to combine the external URI results with internal URI results in the `bo0` file. Possible values are `no` and `yes`.
23	`keep_aged_data=yes`	Determines whether to keep the value of the aged model parameters after reliability analysis. Possible values are `no` and `yes`.
24	`check_neg_aging_type=error`	Specifies the message type to check the negative value in `bt0`. Possible values are `error`, `warn` and `ignore`. Default is `error`.
25	`check_neg_aging_clamp=no`	Clamps the negative age value in the `bt0` file. Possible values are `no` and `yes`.
26	`tranflag=0`	Specifies the reliability transient analysis flag.
27	`stress_tran_name=[...]`	Specifies stress transient analysis name.
28	`aging_tran_name=[...]`	Specifies aging transient analysis name.
29	`enablenativeage=no`	Enables negative age value. Possible values are `no` and `yes`.
30	`output_binary_file=no`	Specifies the format of the reliability analysis output file. Possible values are `no` and `yes`.
31	`deg_ratio_hci=1.0`	The degradation ratio for HCI effect.
32	`deg_ratio_nbti=1.0`	The degradation ratio for NBTI effect.
33	`deg_ratio_pbti=1.0`	The degradation ratio for PBTI effect.

© 2003-2020 All Rights Reserved.

34	`deg_ratio_bti=1.0`	The degradation ratio for NBTI/PBTI effect.
35	`resetanalysisparam=tran`	Reset the analysis parameters in the reliability block. Possible values are `tran`, `dc`, and `ac`.
36	`urilib_type=inline`	Compatibility with RelXpert. Possible values are `inline`, `sub`, and `dev`.
37	`enable_ade_process=no`	Enable reliability analysis in ADE. Possible values are `no` and `yes`.
38	`output_region_param=no`	Prints the region method of the parameter. Possible values are `no` and `yes`.
39	`deg_ratio_hcin=1.0`	The degradation ratio for NMOS HCI effect.
40	`deg_ratio_hcip=1.0`	The degradation ratio for PMOS HCI effect.
41	`deg_ratio_btin=1.0`	The degradation ratio for PBTI effect.
42	`deg_ratio_btip=1.0`	The degradation ratio for NBTI effect.
43	`deltad_item`	Specifies the electrical parameter for lifetime estimation. It is available only for the TMI aging flow. Possible values are `didsat`, `didlin`, `dvtlin`, and `lifetime`.
44	`degsort_item=0`	Specifies which item must be used for sorting. It is available only for the TMI aging flow. Possible values are `didsat`, `didlin`, `dvtlin`, and `lifetime`.
45	`simmode`	Mode of reliability analysis. Possible values are `stress`, `aging`, and `all`.
46	`simmode_file`	simMode file.
47	`simmode_tmifile`	Input file for TMI Aging flow.
48	`tmi_aging_mode`	Mode of tmi aging flow. Possible values are `aging`, `she`, and `all`.
49	`degsort=no`	Specifies to enable to sort degradation data in decreasing order. Possible values are `no` and `yes`.

© 2003-2020 All Rights Reserved.

Parameter Index

In the following index, the number corresponding to each parameter name indicates where to find the description of that parameter.

accuracy 7
age_time 1
aging_tran_name 28
check_neg_aging_clamp 25
check_neg_aging_type 24
combine_deg 22
deg_ratio_bti 34
deg_ratio_btin 41
deg_ratio_btip 42
deg_ratio_dev 5
deg_ratio_hci 31
deg_ratio_hcin 39
deg_ratio_hcip 40
deg_ratio_nbti 32
deg_ratio_pbti 33
deg_ratio_type 4
degsort 49
degsort_item 44
degsort_num 21
degsort_threshold 20
deltad 2
deltad_item 43
deltad_mod 3
dumpagemodel 11
dumpagemodel_dev 12
enable_ade_process 37
enablenativeage 29
idmethod 10
igatemethod 9
isubmethod 18
keep_aged_data 23
minage 8
opmethod 19
output_binary_file 30
output_region_param 38
relxtran_start 16
relxtran_stop 17
report_model_param 6
resetanalysisparam 35
simmode 45
simmode_file 46
simmode_tmifile 47
stress_tran_name 27
tmi_aging_mode 48
tranflag 26
urilib_debug 15
urilib_file 13
urilib_mode 14
urilib_type 36

© 2003-2020
All Rights Reserved.

Sweep Analysis (sweep)

Description

The `sweep` analysis sweeps a parameter, running the list of analyses (or multiple analyses) for each value of the parameter. The swept parameter can be circuit temperature, a device instance parameter, a device model parameter, a netlist parameter, or a subcircuit parameter for a particular subcircuit instance.

A set of parameters can be swept simultaneously, using the `paramset` parameter. The other sweep interval or variable parameters cannot be specified with the `paramset` parameter. Do `spectre -h paramset` for information on defining a paramset.

Within a sweep statement, you can specify analyses statements. These statements should be bound within braces. The opening brace is required at the end of the line defining the sweep. Sweep statements can be nested.

You can sweep the circuit temperature by giving the parameter name as `param=temp`, without a `dev`, `mod`, or `sub` parameter. You can sweep a top-level netlist parameter by giving the parameter name without a `dev`, `mod`, or `sub` parameter. You can sweep a subcircuit parameter for a particular subcircuit instance by specifying the subcircuit instance name with the `sub` parameter and the subcircuit parameter name with the `param` parameter. The same can be done using `dev` for the device instance name or `mod` for the device model name.

After the analysis is complete, the modified parameter returns to its original value.

For additional information, see *Sweep Analysis* in the *Spectre Classic Simulator, Spectre APS, Spectre X, and Spectre XPS User Guide*.

Definition

```
Name sweep parameter=value ...
```

Parameters

Sweep interval parameters

1	`start=0`	Start sweep limit.
2	`stop`	Stop sweep limit.

© 2003-2020 All Rights Reserved.

3	`center`	Center of sweep.
4	`span=0`	Sweep limit span.
5	`step`	Step size, linear sweep.
6	`lin=50`	Number of steps, linear sweep.
7	`dec`	Points per decade.
8	`log=50`	Number of steps, log sweep.
9	`values=[...]`	Array of sweep values.
10	`valuesfile`	Name of the file containing the sweep values.

© 2003-2020 All Rights Reserved.

Sweep variable parameters

11	`dev`	Device instance whose parameter value is to be swept.
12	`sub`	Subcircuit instance whose parameter value is to be swept.
13	`mod`	Model whose parameter value is to be swept.
14	`param`	Name of parameter to sweep.
15	`paramset`	Name of parameter set to sweep.

Fault analysis parameters

16	`faults=[...]`	Names of the fault blocks from the list to perform direct fault analysis. This is required parameter for DFA, `faults=[*]` includes all faults.
17	`nominal=yes`	Nominal (fault free) simulation will be performed during fault analysis. Possible values are `no` and `yes`.
18	`faultsid=[...]`	Indexes of faults from the list to perform fault analysis. If specified, simulation performed for requested subset of fault list.
19	`faultsname=[...]`	Names of faults from the list to perform fault analysis. If specified, simulation performed for requested subset of fault list.
20	`faultsinst=[...]`	List of instances to perform fault analysis. If specified, simulation performed only for faults within given instances.
21	`faultsamplenum`	Number of samples in simple random sampling of fault list during simulation.
22	`faultsampleratio`	Value in percent to apply simple random sampling to fault list during simulation.
23	`faultseed=1`	Optional starting seed for random number generator during fault sampling.
24	`faultsamplemethod=random`	Method to be used for fault sampling. Possible values are `random`, `randomweighted`, `randomuniform` and `weightsorted`.

© 2003-2020 All Rights Reserved.

25	`faultcollapse=no`	Perform bridge fault collapsing in the list before fault simulation. Possible values are `no` and `yes`.

Annotation parameters

26	`annotate=sweep`	Degree of annotation. Possible values are `no`, `title`, and `sweep`.
27	`title`	Analysis title.
28	`distribute`	Distribute a sweep analysis to reduce simulation time by using more computer cores across multiple computers. Possible values are `no`, `fork`, `rsh`, `ssh`, `lsf`, `sge`, `nc`, and `auto`.
29	`numprocesses`	Specifies the number of jobs in distributed mode.
30	`savedatainseparatedir=no`	Whether to save data for each plot in a separate directory. `savedatainseparatedir=name` is only used for direct fault analysis (DFA). Possible values are `no`, `yes` and `name`.

You can specify sweep limits by specifying the end points or the center value and the span of the sweep. Steps can be linear or logarithmic, and you can specify the number of steps or the size of each step. You can specify a step size parameter (`step`, `lin`, `log`, or `dec`) and determine whether the sweep is linear or logarithmic. If you do not specify a step size parameter, the sweep is linear when the ratio of the stop-to-start values is less than 10 and logarithmic when this ratio is 10 or greater.

Example:

```
swp sweep param=temp values=[-50 0 50 100 125] {
         oppoint dc oppoint=logfile
}
```


© 2003-2020 All Rights Reserved.

Parameter Index

In the following index, the number corresponding to each parameter name indicates where to find the description of that parameter.

annotate 26
center 3
dec 7
dev 11
distribute 28
faultcollapse 25
faults 16
faultsamplemethod 24
faultsamplenum 21
faultsampleratio 22
faultseed 23
faultsid 18
faultsinst 20
faultsname 19
lin 6
log 8
mod 13
nominal 17
numprocesses 29
param 14
paramset 15
savedatainseparatedir 30
span 4
start 1
step 5
stop 2
sub 12
title 27
values 9
valuesfile 10

© 2003-2020
All Rights Reserved.

Time-Domain Reflectometer Analysis (tdr)

Description

The time-domain reflectometer analysis linearizes the circuit about the DC operating point and computes the reflection coefficients versus time, looking from the active ports into the circuit.

Definition

```
Name tdr parameter=value ...
```

Parameters

1	`stop`	Stop time.
2	`settling=stop`	Time required for circuit to settle.
3	`start=-0.1 stop`	Time output waveforms begin.
4	`smoothing=2`	Window smoothing parameter (useful range is `0` to `15`).
5	`vel=1`	Propagation velocity of medium normalized to c.
6	`points=64`	Number of time points.
7	`ports=[...]`	List of active ports. If not given, all ports are used.
8	`readns`	File that contains estimate of DC solution (nodeset).
9	`useprevic=no`	If set to `yes` or `ns`, use the converged initial condition from previous analysis as ic or ns. Possible values are `no`, `yes`, and `ns`.
10	`restart=yes`	Restart the DC solution from scratch if any condition has changed. If not, use the previous solution as initial guess. Possible values are `no` and `yes`.
11	`annotate=sweep`	Degree of annotation. Possible values are `no`, `title`, `sweep`, `status`, and `steps`.
12	`title`	Analysis title.

© 2003-2020 All Rights Reserved.

13	`oppoint=no`	Should operating point information be computed; if yes, where should it be sent. Operating point information would not be output if the operating point computed in the previous analysis remains unchanged. Possible values are `no`, `screen`, `logfile`, and `rawfile`.
14	`prevoppoint=yes`	Use the operating point computed on the previous analysis. Possible values are `no` and `yes`.

Such a small-signal analysis begins by linearizing the circuit about an operating point. By default, this analysis computes the operating point, if it is not yet known, or recomputes it, if any significant component or circuit parameter has changed. However, if a previous analysis computed an operating point, you can set `prevoppoint=yes` to avoid recomputing it. For example, if you use this command when the previous analysis was a transient analysis, the operating point is the state of the circuit on the final time point.

Parameter Index

In the following index, the number corresponding to each parameter name indicates where to find the description of that parameter:

annotate 11	prevoppoint 14	smoothing 4	useprevic 9
oppoint 13	readns 8	start 3	vel 5
points 6	restart 10	stop 1	
ports 7	settling 2	title 12	

© 2003-2020 All Rights Reserved.

THERMAL Analysis (thermal)

Definition

```
Name thermal parameter=value ...
```

Parameters

1	`title`	Analysis title.
2	`annotate=sweep`	Specifies the degree of annotation. Possible values are `no`, `title`, `sweep`, and `status`.
3	`config`	Specifies the name of configured file of electrothermal analysis.
4	`sort=trise`	Specifies the sorting criteria for the thermal analysis output file. Possible values are `trise` and `pwr`.
5	`maxinst=all`	Specifies the number of sorted device.
6	`trise_lmt=300 C`	Specifies the maximum Trise.
7	`method=steadystate`	Activates either steady state or dynamic thermal analysis. Possible values are `steadystate`, and `dynamic`.
8	`numiter=2`	Number of electro-thermal iterations to be performed.
9	`res_trise_rpt=no`	Updates resistor temperature. Only instance temperatures are updated when this option is set to `no`. Possible values are `no` and `yes`.
10	`thermal_step=0.0`	Thermal time step (seconds) for dynamic thermal solver. Set this parameter to `0` to get identical electrical and thermal time steps.
11	`thermal_step_trise=1.0`	Trise threshold for device temperature update.
12	`save_inst=[...]`	List of device names for which dynamic temperature and power will be reported.

© 2003-2020 All Rights Reserved.

13	`dbg_output=no`	The flag of generating the `.dbg_trise_iter*` and `.thermal_pwr.iter*` files in raw file directory. Possible values are `no` and `yes`.
14	`dbg_output_sort=trise`	Sorting order of devices in debug reports. Possible values are `trise`, `pwr`, and `index`.
15	`probe_output_format=binary`	Specifies the format of the output by the probe. Possible values are `binary`, `txt`, `ascii`, and `both`.
16	`chip_bbox=[...]`	Delimits the boundary of the chip by specifying the value of coordinate.The order of the input value of is left bottom and then top right.
17	`thermal_trise_step=0.0`	Trise threshold for using thermal solver.
18	`saveonlylaststepdata`	Dump the waveform files in a separate directory for steady-state. Possible values are `no` and `yes`.
19	`thermal_windows=[...]`	Boundary time to execute the thermal analysis. Array should have an even number of values. Note that only one time window is supported.
20	`thermal_db_type=binary`	Select thermal data output format. Possible values are `binary` and `txt`.
21	`thermal_data_format=binary`	Select trise data output format. Possible values are `none`, `binary` and `txt`.
22	`frame_freq=3`	Specify the time step interval for thermal trise data output.
23	`thermal_ignore_para_rc=no`	Select whether ignore parasitic RC for thermal analysis. Possible values are `no` and `yes`.
24	`save_channelonly=no`	Select the output layer for thermal trise data output. Possible values are `no` and `yes`.
25	`thermal_LTE_threshold=DBL_MAX`	

© 2003-2020 All Rights Reserved.

		Thermal LTE threshold.
26	`keep_ori_cap=no`	Keep original cap value from tdb file or not. Possible values are `no` and `yes`.
27	`keep_pkg_grid=no`	Keep package grid from tdb file or not. Possible values are `no` and `yes`.

Parameter Index

In the following index, the number corresponding to each parameter name indicates where to find the description of that parameter.

annotate 2	keep_pkg_grid 27	save_inst 12	thermal_step 10
chip_bbox 16	maxinst 5	saveonlylaststepdata 18	thermal_step_trise 11
config 3	method 7	sort 4	thermal_trise_step 17
dbg_output 13	numiter 8	thermal_LTE_threshold 25	thermal_windows 19
dbg_output_sort 14	probe_output_format 15	thermal_data_format 21	title 1
frame_freq 22	res_trise_rpt 9	thermal_db_type 20	trise_lmt 6
keep_ori_cap 26	save_channelonly 24	thermal_ignore_para_rc 23	

© 2003-2020 All Rights Reserved.

Transient Analysis (tran)

Description

This analysis computes the transient response of a circuit over the interval from `start` to `stop`. The initial condition is taken to be the DC steady-state solution, if not otherwise given.

Also see *Transient Analysis* in the *Spectre Classic Simulator, Spectre APS, Spectre X, and Spectre XPS User Guide*.

Definition

```
Name tran parameter=value ...
```

Parameters

Simulation interval parameters

1	`stop (s)`	Stop time.
2	`tpoints=[...] s`	Multiple of pairs<pstep, stop>.
3	`start=0 s`	Start time.
4	`pstep (s)`	print step.
5	`outputstart=start s`	Output is saved only after this time is reached.
6	`readtime`	
7	`autostop=no`	If yes, the analysis is terminated when all event-type measurement expressions have been evaluated. Event-type expressions use thresholding, event, or delay type functions. If the value is spice, autostop is consistent with spice simulator. Possible values are `no`, `yes`, and `spice`.

© 2003-2020 All Rights Reserved.

Time-step parameters

8	`maxstep (s)`	Maximum time step. The default is derived from `errpreset`.
9	`step=0.001 (stop-start) s`	Minimum time step used by the simulator solely to maintain the aesthetics of the computed waveforms.
10	`minstep (s)`	Minimum time step. If specified, the error tolerance requirements may be ignored when step size is less than minstep.
11	`istep=0.001 (stop-start) s`	When step size is greater than istep, the local truncation error checking is enabled for algebraic nodes.

Initial-condition parameters

12	`ic=all`	The value to be used to set initial condition. Possible values are `dc`, `node`, `dev`, and `all`.
13	`skipdc=no`	If set to yes, there is no DC analysis for transient. Possible values are `no`, `yes`, `useprevic`, `waveless`, `rampup`, `autodc`, `sigrampup`,and `dcrampup`.
14	`rampupratio=0.1`	The rampup ratio for `skipdc=rampup` and `sigrampup`.
15	`rampuptime (s)`	The rampup time for `skipdc=rampup`. The default value is set to `rampupratio*stop`.
16	`readic`	File that contains initial condition.
17	`useprevic=no`	If set to yes or ns, use the converged initial condition from previous analysis as ic or ns. Possible values are `no`, `yes` and `ns`.
18	`linearic=no`	Enable linear IC method to calculate initial conditions automatically from a type of stability analysis in the range [0.5*oscfreq, 1.5*oscfreq]. Overrides user-defined initial conditions, if instability is detected. Possible values are `no` and `yes`.

© 2003-2020 All Rights Reserved.

19	`oscfreq=0.0`	Estimation of the oscillation frequency when linear IC method is enabled.

Convergence parameters

20	`readns`	File that contains an estimate of the initial transient solution.
21	`cmin=0 F`	Minimum capacitance from each node to ground.

State-file parameters

22	`write`	File to which initial transient solution is to be written.
23	`writefinal`	File to which final transient solution is to be written.
24	`ckptperiod`	Checkpoint the analysis periodically by using the specified period.
25	`saveperiod`	Save the tran analysis periodically on the simulation time.
26	`saveperiodhistory=no`	Maintains the history of saved files. If `yes`, stores all the saved files. Possible values are `no` and `yes`.
27	`saveclock (s)`	Save the tran analysis periodically on the wall clock time. The default is 1800s for Spectre. This parameter is disabled in Spectre APS mode by default.
28	`savetime=[...]`	Save the analysis states into files on the specified time points.
29	`savefile`	Save the analysis states into the specified file.
30	`recover`	Specify the file to be restored.

© 2003-2020 All Rights Reserved.

Integration method parameters

31	`method`	Integration method. The default derived from `errpreset`. Possible values are `euler`, `trap`, `traponly`, `gear2`, `gear2only`, `gear3`, `gear3only`, `gear2gear3`, `trapgear2`, and `trapeuler`.

Emir output parameters

32	`emirformat=none`	Format of the EM/IR database file. Possible values are `none` and `vavo`.
33	`emirstart (s)`	EM/IR start time.
34	`emirstop (s)`	EM/IR stop time.
35	`emirfile`	Name of the EM/IR database file. The default is %A_emir_vavo.db. The file will be output to raw directory.
36	`emirtimewindows=[...]`	Time check windows of emir. Array should have an even number of values [b_begin1 b_end1 b_begin2 b_end2 ...]. This option has higher priority than `emirstart` and `emirstop`.

Accuracy parameters

37	`errpreset`	Selects a reasonable collection of parameter settings. Possible values are `liberal`, `moderate`, and `conservative`.
38	`relref`	Reference used for the relative convergence criteria. The default is derived from `errpreset`. Possible values are `pointlocal`, `alllocal`, `sigglobal`, and `allglobal`.
39	`lteratio`	Ratio used to compute LTE tolerances from Newton tolerance. The default is derived from `errpreset`.
40	`fastbreak=no`	If yes, VHDLAMS Break statement is handled using faster Verilog method. Possible values are `no` and `yes`.

© 2003-2020 All Rights Reserved.

41	`d2aminstep=0`	Minimum stepsize that can be taken when there is a D2A event. If this is zero, the simulators min step size is chosen.
42	`fastcross=discrete`	Using limited threshold reject method for fast cross detection. Possible values are `no`, `yes`, `discrete`, and `cm`.
43	`transres=1e-9 stop s`	Transition resolution. The transient analysis attempts to stop at corners of input waveforms (for example, corners of rising/falling edge of a pulse). If such events occur within a time less than transres, the analysis combines the events into one and forces only one time point. The rest of the steps are determined by error control. This may lead to loss of detail.
44	`lteminstep=0.0 s`	Local truncation error is ignored if the step size is less than lteminstep.
45	`ltethstep=1e-12 s`	LTE tolerance can be relaxed for signal with discontinuity when step size is less than ltethstep.
46	`d2atimetol=0`	Time tolerance for D2A events. The smaller the value, the closer the time when the analog solver actually executes the d2a event may be to the time when the event gets reported.
47	`vrefmax`	Upper limit of the voltage reference for relative error calculation.
48	`irefmax`	Upper limit of the current reference for relative error calculation.
49	`vrefbins=[1 3 5 10]`	Specifies the voltage bins when bin_relref=yes is used. Default setting is vrefbins=[1 3 5 10].
50	`irefbins=[1e-6 1e-5 1e-4 1e-3 1e-2 1e-1]`	Specifies the current bins when bin_irelref=yes is used. Default setting is irefbins=[1e-6 1e-5 1e-4 1e-3 1e-2 1e-1].

© 2003-2020 All Rights Reserved.

nnotation parameters

51	`annotate=sweep`	Degree of annotation. Possible values are `no`, `title`, `sweep`, `status`, `estimated`, `steps`, `iters`, `detailed`, `rejects`, `alliters`, `detailed_hb`, and `internal_hb`.
52	`annotateic=no`	Degree of annotation for initial condition. Possible values are `no`, `title`, `sweep`, `status`, `estimated`, `steps`, `iters`, `detailed`, `rejects`, and `alliters`.
53	`annotatedigits=4`	Number of significant dig its to be annotated to the transient time in the simulation log file. Possible values are 0, 1, 2 ...16. If set to 0, the number of significant digits is dynamic as per the current time and step. If set to n (where n = 1, 2 ...16), the number i s equal to n.
54	`title`	Analysis title.

Output parameters

55	`save`	Signals to output. Possible values are `all`, `lvl`, `allpub`, `lvlpub`, `selected`, `none`, and `nooutput`.
56	`nestlvl`	Levels of subcircuits to output.
57	`oppoint=no`	Determines whether the operating point information should be computed for initial timestep; if yes, where should it be printed (screen or file). Possible values are `no`, `screen`, `logfile`, and `rawfile`.
58	`skipstart=0 s`	The time to start skipping output data.
59	`skipstop=stop s`	The time to stop skipping output data.
60	`skipcount=1`	Save only one of every skipcount points.
61	`strobeperiod=0 s`	The output strobe interval (in seconds of transient time).
62	`strobedelay=0 s`	The delay (phase shift) between the skipstart time and the first strobe point.
63	`strobeoutput=strobeonly`	

© 2003-2020 All Rights Reserved.

		Specifies which time points to output during strobe. Possible values are `strobeonly`, `all`, `none`, and `fault-times`.
64	`strobestep=0 s`	Equivalent to strobeperiod.
65	`strobefreq`	The reciprocal of strobeperiod (strobestep).
66	`strobestart=0 s`	Equivalent to skipstart.
67	`strobestop=stop s`	Equivalent to skipstop.
68	`strobetimes=[...] s`	Times in ascending order when strobe output performed.
69	`progress_t`	Print out the annotate message every interval specified by progress_t in terms of minutes. **Note:** This degrades performance.
70	`progress_p`	Print out the annotate message every progress_p percent of transient time. **Note:** This degrades performance.
71	`compression=no`	Perform global waveform compression. Possible values are `no`, `all`, `wildcardonly` and `yes`.
72	`compref=alllocal`	Reference used for relative error criteria in waveform compression. Possible values are `alllocal`, `pointlocal`, `sig-global`, and `abstol`.
73	`compvabstol=1.0e-3 V`	Absolute voltage tolerance for waveform compression.
74	`compiabstol=1.0e-12 A`	Absolute current tolerance for waveform compression.
75	`comppwrabstol=1.0e-15 W`	Absolute power tolerance for waveform compression.
76	`compreltol=0.001`	Relative tolerance for waveform compression.
77	`complvl`	Enables waveform compression for specified hierarchy level and below (top level=1). All levels above specified level are not compressed. Complvl has higher priority than global compression statement.

© 2003-2020 All Rights Reserved.

78	`flushpoints`	Flush all unwritten data in the buffer to outputs after number of calculated points.
79	`flushtime (s)`	Flush unwritten data in the buffer to outputs after real time has elapsed.
80	`flushofftime (s)`	Real time to stop flushing outputs.
81	`flushperiod (s)`	
82	`infonames=[...]`	Names of info analyses to be performed at the time point in the `infotimes` array.
83	`infotimes=[...] s`	Times when the analysis specified by `infoname` is performed.
84	`infotime_pair=yes`	If set to `yes`, there is a 1:1 correspondence between the values in infonames and in infotimes. For example, infonames[0] will be run at infotimes[0], infonames[1] will be run at infotimes[1], etc. If set to `no`, all analysis in infonames will be run at each infotimes time. Possible values are `no` and `yes`.
85	`acnames=[...]`	Names of ac, noise, sp, stb, or xf analyses to be performed at each time point in the `actimes` array. The named small-signal analyses are not run separately, but only as part of the transient analysis.
86	`actimes=[...] s`	Times when analyses specified in `acname` array are performed.
87	`actime_pair=yes`	If set to yes, there is a 1:1 correspondence between the values in acnames and in actimes. For example, acnames[0] will be run at actimes[0], acnames[1] will be run at actimes[1], etc. If set to no, all analysis in acnames will be run at each actimes time. Possible values are `no` and `yes`.

Newton parameters

88	`maxiters=5`	Maximum number of iterations per time step.
89	`dcmaxiters=150`	Maximum number of dc iterations in tranFindInitialState.

© 2003-2020 All Rights Reserved.

90	`restart=yes`	Restart the DC solution from scratch if any condition has changed. If not, use the previous solution as initial guess. Possible values are `no` and `yes`.

Circuit age

91	`circuitage (Years)`	Stress time. Age of the circuit used to simulate hot-electron degradation of MOSFET and BSIM circuits.

Transient noise parameters

92	`trannoisemethod=default`	Use this option to enable the adaptive noise step control. Possible values are `default` and `adaptive`.
93	`noisefmax=0 Hz`	The bandwidth of pseudorandom noise sources. A valid (nonzero) noisefmax turns on the noise sources during transient analysis. The maximum time step of the transient analysis is limited to 0.5/noisefmax.
94	`noisescale=1`	Noise scale factor applied to all generated noise. Can be used to artificially inflate the small noise to make it visible above transient analysis numerical noise floor, but it should be small enough to maintain the nonlinear operation of the circuit.
95	`noiseseed`	Seed for the random number generator. Should be positive integer. Specifying the same seed allows you to reproduce a previous experiment.
96	`mc_auto_noiseseed=no`	Regenerate the seed at every monte carlo iteration using same mechanism. Possible values are yes, no. Default is no. Possible values are `no` and `yes`.

© 2003-2020 All Rights Reserved.

97	`noisefmin (Hz)`	If specified, the power spectral density of the noise sources depends on the frequency in the interval from noisefmin to noisefmax. Below noisefmin, the noise power density is constant. The default value is noisefmax, so that only white noise is included by default, and noise sources are evaluated only at noisefmax for all models. 1/noisefmin cannot exceed the requested time duration of transient analysis.
98	`noiseon=[...]`	The list of instances to be considered as noisy during transient noise analysis.
99	`noiseoff=[...]`	The list of instances to be considered as not noisy during transient noise analysis.

Dynamic parameters

100	`param`	Name of the parameter to be updated to a different value with time during tran. You can use `param=isnoisy` with `param_vec=[...]` to turn On or Off the transient noise in time windows. For example, `param=isnoisy param_vec=[0ns 0 100ns 1 500ns 0 ]`. The transient noise is OFF (param value is 0) from time 0 to 100ns and the noise is ON (param value is 1) from 100ns to 500ns and OFF from 500ns to stop time.
101	`paramset`	Name of dynamic parameter set.
102	`param_vec=[...]`	The `time_value` points to `param=name`.
103	`param_file`	The file that contains the `time_value` points to `param=name`.
104	`sub`	Subcircuit instance for the subckt instance parameter given in `param=name`.
105	`mod`	Device model for the model parameter given in `param=name`.
106	`dev`	Device instance for the instance parameter given in `param=name`.
107	`param_step`	Defines how often to update the dynamic parameter values. If param_step=0, it updates the parameter value on given time point.

© 2003-2020 All Rights Reserved.

Fault analysis parameters

108	`faulttimes=[...] s`	Fault times in ascending time order where transient fault analysis is performed. This is a required parameter for TFA, and optional for DFA. `faultstart/faultstep/faultstop`, `faultevent`, or `faultfile` can be used as an alternative.
109	`faultstep (s)`	The time interval between the fault times.
110	`faultstart=0 s`	The start time, or the first fault time, of transient fault analysis.
111	`faultstop=stop s`	The stop time, or the last fault time, of transient fault analysis.
112	`faultfile`	Name of a file that contains fault times in ascending time order where transient fault analysis is performed.
113	`faultevent=[...] s`	Events to perform transient fault analysis.
114	`faultautostop=no`	Auto stop transient simulation when the fault is detected based on assert violation. Possible values are `no`, `func`, `check`, and `all`.
115	`faultskipdc=yes`	Enforce skipdc=yes during direct fault analysis when no solution found during IC analysis. Possible values are `no` and `yes`.
116	`faultstrobe=no`	Time point strobe will be enabled during fault analysis.
117	`faultmethod=linear`	Simulation method used for transient fault analysis. Possible values are `linear`, `maxiters`, `onestep`, `leadtime`, `testpoint` and `timezero`.
118	`faults=[...]`	Names of fault blocks in the fault list to perform the transient fault analysis.
119	`faultsid=[...]`	Indexes of faults from the list to be considered during simulation.
120	`faultsname=[...]`	Names of faults from the list to be considered during simulation
121	`faultsinst=[...]`	List of instances to be considered during fault simulation.
122	`faultsamplenum`	Number of samples in simple random sampling of fault list during simulation.
123	`faultsampleratio`	Value in percent to apply simple random sampling to fault list during simulation.

© 2003-2020 All Rights Reserved.

124	`faultseed=1`	Optional starting seed for random number generator during fault sampling.
125	`faultsamplemethod=random`	Method to be used for fault sampling. Possible values are `random`, `randomweighted`, `randomuniform` and `weightsorted`.
126	`faultcollapse=no`	Perform bridge fault collapsing in the list before fault simulation. Possible values are `no` and `yes`.
127	`faultsave=testpoints`	Set of data to be saved during transient fault analysis. Possible values are `testpoints` and `all`.
128	`faultddm`	File containing the command line options to run 'spectre_ddmrpt' when fault simulation finished.
129	`faultdb`	File name to save fault simulation data.
130	`faultfmt`	File format to save fault simulation data. Possible values are `csv`, `xl`, and `sql`.
131	`faultleadtime=0.0 s`	The lead time intervals where the fault will be injected before the fault time when f`aultmethod=leadtime`.
132	`faultmaxiters`	Maximum number of iterations per time step for transient fault analysis. Default is `50` for maxiters, 10 for onestep and `5` for other methods.
133	`faultlimsteps=yes`	Auto stop slow simulation for the faults taking above average number of time steps. Possible values are `no` and `yes`.
134	`faultlimtime`	Maximum elapsed time allowed to perform one fault simulation (in hours). Simulation auto-stops if not finished earlier that the specified time.
135	`faultsafecheck=no`	Enable auto-stop during the nominal simulation when the assert with 'safecheck' specified has been violated. Possible values are `no` and `yes`.
136	`faultrampinterval=0`	

© 2003-2020 All Rights Reserved.

		The coefficient (between 0 and 1) to define the size of time interval to ramp fault conductance after fault injection when 'faultmethod=leadtime' specified.
137	`faultic=no`	Perform dc analysis after fault injection as initial conditions for transient fault analysis. Possible values are `no` and `yes`.
138	`maxstepratio`	Maximum time step ratio for custom 'errpreset'.
139	`reltolratio`	Reltol ratio for custom 'errpreset'.

You can specify the initial condition for the transient analysis by using the `ic` statement or the `ic` parameter on the capacitors and inductors. If you do not specify the initial condition, the DC solution is used as the initial condition. The `ic` parameter on the transient analysis controls the interaction of various methods of setting the initial conditions. The effects of individual settings are as follows:

`ic=dc`: All initial conditions are ignored, and the DC solution is used.

`ic=node`: The `ic` statements are used, and the `ic` parameter on the capacitors and inductors is ignored.

`ic=dev`: The `ic` parameters on the capacitors and inductors are used, and the `ic` statements are ignored.

`ic=all`: Both the `ic` statements and the `ic` parameters are used, and the `ic` parameters override the `ic` statements.

If you specify an initial condition file with the `readic` parameter, initial conditions from the file are used, and any `ic` statements are ignored.

After you specify the initial conditions, Spectre computes the actual initial state of the circuit by performing a DC analysis. During this analysis, Spectre forces the initial conditions on nodes by using a voltage source in series with a resistor whose resistance is `rforce` (see `options`).

With the `ic` statement, it is possible to specify an inconsistent initial condition (one that cannot be sustained by the reactive elements). Examples of inconsistent initial conditions include setting the voltage on a node with no path of capacitors to ground, or setting the current through a branch that is not an inductor. If you initialize Spectre inconsistently, its solution jumps, that is, it changes instantly at the beginning of the simulation interval. You should avoid such changes because Spectre can have convergence problems while trying to make the jump.

© 2003-2020 All Rights Reserved.

You can skip DC analysis entirely by using the parameter `skipdc`. If DC analysis is skipped, the initial solution is trivial or is given in the file that you specified by using the `readic` parameter, or if the `readic` parameter is not specified, by the values specified on the ic statements. Device-based initial conditions are not used for `skipdc`. Nodes that you do not specify with the `ic` file or `ic` statements start at zero. You should not use this parameter unless you are generating a nodeset file for circuits that have trouble in the DC solution; it usually takes longer to follow the initial transient spikes that occur when the DC analysis is skipped than it takes to find the real DC solution. The `skipdc` parameter might also cause convergence problems in the transient analysis.

The possible settings of parameter `skipdc` and their meanings are as follows:

`skipdc=no`: Initial solution is calculated using normal DC analysis (default).

`skipdc=yes`: Initial solution is given in the file specified by the `readic` parameter or the values specified on the ic statements.

`skipdc=useprevic`: Initial solution obtained from the previous analysis is used.

`skipdc=waveless`: Same initial solution as `skipdc=yes`, but the waveform production in the time-varying independent sources is disabled during the transient analysis. Independent source values are fixed to their initial values (not their DC values).

`skipdc=rampup`: Independent source values start at 0 and ramp up to their initial values in from `start` to `rampuptime`. If `rampuptime` is not given, `rampuptime` will be set to `rampupratio*stop`. After that their values remain constant. Zero initial solution is used.

`skipdc=autodc`: Same as `skipdc=waveless` if a nonzero initial condition is specified. Otherwise, same as `skipdc=rampup`.

`skipdc=sigrampup`: Independent source values start at 0 and ramp up to their initial values in the first phase of the simulation. Unlike `skipdc=rampup`, the waveform production in the time-varying independent source is enabled after the rampup phase. The rampup simulation is from the `start` parameter. If the `start` parameter is not specified, the default `start` time is set to `rampupratio*stop`.

Nodesets help find the DC or the initial transient solution. You can specify nodesets in the circuit description file with nodeset statements, or in a separate file using the `readns` parameter. When nodesets are specified, Spectre computes an initial guess of the solution by performing DC analysis, while forcing the specified values on to nodes by using a voltage source in series with a resistor whose resistance is `rforce`. Spectre then removes these voltage sources and resistors and computes the required solution from this initial guess.

Nodesets have two important uses. First, if a circuit has two or more solutions, nodesets can bias the simulator towards computing the required solution. Second, these are a convergence

© 2003-2020 All Rights Reserved.

aid. By estimating the solution of the largest possible number of nodes, you might be able to eliminate a convergence problem or significantly speed up convergence.

When you simulate the same circuit multiple times, it is recommended that you use both `write` and `readns` parameters and assign the same file name to both parameters. DC analysis then converges quickly even if the circuit has changed since the last simulation, and the nodeset file is automatically updated.

Nodesets and initial conditions have similar implementation, but produce different effects. Initial conditions define the solution, whereas nodesets only influence it. When you simulate a circuit with a transient analysis, Spectre forms and solves a set of differential equations. Because differential equations have an infinite number of solutions, a complete set of initial conditions must be specified to identify the required solution. Any initial conditions that you do not specify are computed by the simulator to be consistent. The transient waveforms then start from initial conditions. Nodesets are usually used as a convergence aid and do not affect the final results. However, in a circuit with more than one solution, such as a latch, nodesets bias the simulator towards finding the solution closest to the nodeset values.

The `method` parameter specifies the integration method. The possible settings and their meanings are as follows:

`method=euler`: Backward-Euler is used exclusively.

`method=traponly`: Trapezoidal rule is used almost exclusively.

`method=trapeuler`: Backward-Euler and the trapezoidal rule are used.

`method=gear2only`: Gear's second-order backward-difference method is used almost exclusively.

`method=gear2`: Backward-Euler and second-order Gear are used.

`method=trapgear2`: Allows all three integration methods to be used.

`method=trap`: An advanced version of trap that uses all three integration methods.

The trapezoidal rule is usually the most efficient when you want high accuracy. This method can exhibit point-to-point ringing, but you can control this by tightening the error tolerances. For this reason, though, if you choose loose tolerances to get a quick answer, the backward-Euler or second-order Gear will probably give better results than the trapezoidal rule. Second-order Gear and backward-Euler can make systems appear more stable than they are. This effect is less pronounced with second-order Gear or when you request high accuracy.

Several parameters determine the accuracy of the transient analysis. `reltol` and `abstol` control the accuracy of the discretized equation solution. These parameters determine how

© 2003-2020 All Rights Reserved.

well charge is conserved and how accurately steady-state or equilibrium points are computed. You can set the integration errors in the computation of the circuit dynamics (such as time constants), relative to `reltol` and `abstol` by setting the `lteratio` parameter.

The parameter `relref` determines how the relative error is treated. The `relref` options are as follows:

`relref=pointlocal`: Compares the relative errors in quantities at each node to that node alone.

`relref=alllocal`: Compares the relative errors at each node to the largest values found for that node alone for all past time.

`relref=sigglobal`: Compares relative errors in each circuit signal to the maximum for all signals at any previous point in time.

`relref=allglobal`: Same as `relref=sigglobal,` except that it also compares the residues (KCL error) for each node to the maximum of that node's past history.

The `errpreset` parameter lets you adjust the simulator parameters to fit your needs quickly. You can set `errpreset` to `conservative` if the circuit is sensitive, or you can set it to `liberal` for a fast, but possibly inaccurate, simulation. The setting `errpreset=moderate` suits most needs.

The effect of `errpreset` on other parameters is shown in the following table. In this table, `T= stop - start`.

errpreset	reltol	relref	method	maxstep	lteratio
liberal	* 10	sigglobal	trapgear2	Interval/50	3.5
moderate		sigglobal	traponly	Interval/50	3.5
conservative	* 0.1	alllocal	gear2only	Interval/100	10.0

The default value for `errpreset` is moderate.

The value of `reltol` is increased or decreased from its value in the options statement, but it is not allowed to be larger than 0.01. Spectre sets the value of `maxstep` so that it is no larger than the value given in the table. Except for `reltol` and `maxstep`, `errpreset` does not change the value of any parameters you have explicitly set. The actual values used for the transient analysis are given in the log file.

`errpreset` also controls the LTE Check:

	Liberal	Moderate	Conservative
LTE Check	Caps/Inds	Loose nodes	strict nodes

© 2003-2020 All Rights Reserved.

It controls how the simulator follows signals other than capacitor voltages and inductor currents. When errpreset=liberal, the timestep is not controlled to follow these signals. When errpreset=moderate, the timestep is reduced to follow large changes in these signals. When errpreset=conservative, the timestep is reduced to follow small changes in these signals.

If the circuit you are simulating has infinitely fast transitions (for example, a circuit that contains nodes with no capacitance), Spectre might have convergence problems. To avoid this, you must prevent the circuit from responding instantaneously. You can accomplish this by setting `cmin`, the minimum capacitance to ground at each node, to a physically reasonable nonzero value. This often significantly improves Spectre convergence.

Spectre provides two methods for reducing the number of output data points saved: `strobing`, based on the simulation time, and `skipping` time points, which saves only every N'th point.

The parameters `strobeperiod` and `strobedelay` control the strobing method.`strobeperiod` sets the interval between the points that you want to save, and `strobedelay` sets the offset within the period relative to `skipstart`. The simulator forces a time step on each point to be saved, so that the data is computed, and not interpolated.

The skipping method is controlled by `skipcount`. If this is set to N, only every N'th point is saved.

The parameters `skipstart` and `skipstop` apply to both data reduction methods. Before `skipstart` and after `skipstop`, Spectre saves all computed data.

If you do not want any data saved before a given time, use `outputstart`. If you do not want any data saved after a given time, change the `stop` time.

Dynamic Parameters for Transient Analysis

The parameters defined in the `Dynamic parameters` section allows you to change temperature, design parameters or some option parameters (reltol, residualtol, vabstol, iabstol, and isnoisy) during transient simulation.

Example1: Change temperature during tran with param_step=0(default).

```
tran1 tran stop=0.5u param=temp param_vec=[0ns 20 50ns 25]
```

In this tran run, the temperature is 20C from 0ns-50ns, then it changes to 25C at 50ns. After tran is done, the temperature is reset back to its default value.

You can also define time value pairs in a file and give the file name through parameter param_file.

© 2003-2020 All Rights Reserved.

The format of the file is defined as follows:

```
; comments
 tscale tscale_value
 time  value
 20  50.0
 30  60.0
```

where, the comment line starts with a semicolon (;), tscale is a keyword, and tscale_value is a value, such as 1.0e-6 or 1.0e-9, that is applied to each time point under the time column. time and value are two key words that identify the time and value columns. The values under the time column define the time points and each time point is scaled by tscale_value. The values under the value column define the values for the dynamic parameter.

Note: No unit is supported in the file format.

Example2: change temperature during tran with param_step=10ns

```
tran1 tran stop=0.5u param=temp param_vec=[0ns 20 50ns 25] param_step=10ns
```

In this tran run, the temperature is interpolated with slope (25-20)/(50ns-0ns) and updated every param_step (10ns).

Example3: Change design parameter.

```
tran1 tran stop=0.5u param=gain sub=x1 param_vec=[0 5 1u 20]
```

Example4: turn On and Off transient noise in time windows.

```
tran1 tran stop=0.5u noisefmax=10G noiseseed=1
param=isnoisy param_vec=[0ns 0 100ns 1 500ns 0 ]
```

The transient noise is OFF from time 0 to 100ns. Noise is ON from 100ns to 500ns and noise is OFF from 500ns to stop time.

The default value for `compression` is no. The output file stores data for every signal at every time point for which Spectre calculates a solution. Spectre saves the X-axis data only once, because every signal has the same x value. If `compression=all`, Spectre writes data to the output file only if the signal value changes by at least two times the convergence criteria. To save data for each signal independently, X-axis information corresponding to each signal must be saved. If the signals stay at constant values for large periods of the simulation time, setting `compression=all` results in a smaller output data file. If the signals in your circuit move around a lot, setting `compression=all` results in a larger output data file. The `compvabstol`, `compiabstol`, and `comppwrabstol` options can be used to control output compression abstol for voltage, current, and power respectively. The possible values of compression (`alllocal`, `pointlocal`, `sigglobal`, and `abstol`) in transient statement will be deprecated in the next release.

© 2003-2020 All Rights Reserved.

Parameter Index

In the following index, the number corresponding to each parameter name indicates where to find the description of that parameter:

acnames 85
actime_pair 87
actimes 86
annotate 51
annotatedigits 53
annotateic 52
autostop 7
circuitage 91
ckptperiod 24
cmin 21
compiabstol 74
complvl 77
comppwrabstol 75
compref 72
faultfmt 130
faultic 137
faultleadtime 131
faultlimsteps 133
faultlimtime 134
faultmaxiters 132
faultmethod 117
faultrampinterval 136
faults 118
faultsafecheck 135
faultsamplemethod 125
faultsamplenum 122
faultsampleratio 123
faultsave 127
linearic 18
lteminstep 44
lteratio 39
ltethstep 45
maxiters 88
maxstep 8
maxstepratio 138
mc_auto_noiseseed 96
method 31
minstep 10
mod 105
nestlvl 56
noisefmax 93
noisefmin 97
relref 38
reltolratio 139
restart 90
save 55
saveclock 27
savefile 29
saveperiod 25
saveperiodhistory 26
savetime 28
skipcount 60
skipdc 13
skipstart 58
skipstop 59
start 3

© 2003-2020
All Rights Reserved.

compreltol 76
compression 71
compvabstol 73
d2aminstep 41
d2atimetol 46
dcmaxiters 89
dev 106
emirfile 35
emirformat 32
emirstart 33
emirstop 34
emirtimewindows 36
errpreset 37
fastbreak 40
fastcross 42
faultautostop 114
faultcollapse 126
faultdb 129
faultseed 124
faultsid 119
faultsinst 121
faultskipdc 115
faultsname 120
faultstart 110
faultstep 109
faultstop 111
faultstrobe 116
faulttimes 108
flushofftime 80
flushperiod 81
flushpoints 78
flushtime 79
ic 12
infonames 82
infotime_pair 84
infotimes 83
noiseoff 99
noiseon 98
noisescale 94
noiseseed 95
oppoint 57
oscfreq 19
outputstart 5
param 100
param_file 103
param_step 107
param_vec 102
paramset 101
progress_p 70
progress_t 69
pstep 4
rampupratio 14
rampuptime 15
readic 16
step 9
stop 1
strobedelay 62
strobefreq 65
strobeoutput 63
strobeperiod 61
strobestart 66
strobestep 64
strobestop 67
strobetimes 68
sub 104
title 54
tpoints 2
trannoisemethod 92
transres 43
useprevic 17
vrefbins 49
vrefmax 47

© 2003-2020
All Rights Reserved.

faultddm 128
faultevent 113
faultfile 112
irefbins 50
irefmax 48
istep 11
readns 20
readtime 6
recover 30
write 22
writefinal 23

© 2003-2020
All Rights Reserved.

Special Current Saving Options (uti)

Description

This command is used to report the dynamic current of all devices connected to the specified voltage source during dynamic simulation.

Definition

```
Name uti parameter=value ...
```


© 2003-2020 All Rights Reserved.

Parameters

1	`signal`	Specify the name of signal for which voltage drop must be calculated.
2	`start`	Specify the start name of the measure.
3	`clockcycle (s)`	Specify the length of the clock cycle.
4	`intervals`	Specify the number of measurement intervals within a clock cycle.
5	`cycles`	Specify the number of clock cycles for which this measure will be calculated.
6	`filename`	Specify the root name of the files containing the peak, average and RMS tap currents for this measure.
7	`termflag`	Specify the terminals which will be output.
8	`method`	Specify the method used in post-processing clock analysis data.
9	`namemangling`	Specify namemangling.
10	`utigzip=no`	Zip uti output files. Possible values are `no` and `yes`.
11	`compression=no`	If set to `yes`, UTI output compression is enabled. Default value is `no`. Possible values are `no` and `yes`.

Parameter Index

In the following index, the number corresponding to each parameter name indicates where to find the description of that parameter.

```
clockcycle  3      filename  6        namemangling  9    termflag  7

compression  11    intervals  4       signal  1          utigzip  10

cycles  5          method  8          start  2
```


© 2003-2020 All Rights Reserved.

Transfer Function Analysis (xf)

Description

The transfer function analysis linearizes the circuit about the DC operating point and performs a small-signal analysis that calculates the transfer function from every independent source in the circuit to a designated output. The variable of interest at the output can be voltage or current.

You can specify the output with a pair of nodes or a probe component. Any component with two or more terminals can be a voltage probe. When there are more than two terminals, they are grouped in pairs, and you use the `portv` parameter to select the appropriate pair of terminals. Alternatively, you can specify a voltage to be the output by giving a pair of nodes on the xf analysis statement.

Any component that naturally computes current as an internal variable can be a current probe. If the probe component computes more than one current (as transmission lines, microstrip lines, and N-ports do), you use the `porti` parameter to select the appropriate current. It is an error to specify both `portv` and `porti`. If neither is specified, the probe component provides a reasonable default.

The `stimuli` parameter specifies the inputs for the transfer functions. There are two choices. `stimuli=sources` indicates that the sources present in the circuit should be used. The `xfmag` parameters provided by the sources may be used to adjust the computed gain to compensate for gains or losses in a test fixture. You can limit the number of sources in hierarchical netlists by using the `save` and `nestlvl` parameters.

The transfer functions computed versus output and source types are as follows:

```
Source   |            Output Type            | Source
Type     | voltage          | current        | Amplitude
---------+------------------+----------------+-----------------
vsource  | V(out)/V(src)    | I(out)/V(src)  | V(src)=xfmag
isource  | V(out)/I(src)    | I(out)/I(src)  | I(src)=xfmag
port     | 2*V(out)/V(src)  | 2*I(out)/V(src)| V(src)=2*xfmag
```

where, xfmag defaults to 1 for each source type. For the port, V(src) is the internal source voltage.

Specifying `stimuli=nodes_and_terminals` indicates that all possible transfer functions should be computed. This is useful when it is not known in advance which transfer functions are interesting. Transfer functions for nodes are computed assuming that a unit magnitude flow (current) source is connected from the node to ground. Transfer functions for terminals are computed assuming that a unit magnitude potential (voltage) source is connected in

© 2003-2020 All Rights Reserved.

series with the terminal. By default, the transfer functions from a small set of terminals are computed. If transfer functions from specific terminals are required, specify the terminals in the save statement. You must use the `:probe` modifier (for example, Rout:1:probe) or specify `useprobes=yes` on the options statement. If transfer functions from all terminals are required, specify `currents=all` and `useprobes=yes` on the options statement.

Spectre can perform AC analysis while sweeping a parameter. The parameter can be frequency, temperature, component instance parameter, component model parameter, or netlist parameter. If changing a parameter affects the DC operating point, the operating point is recomputed at each step. You can sweep the circuit temperature by giving the parameter name as `temp`, without a `dev` or `mod` parameter. In addition, you can sweep a netlist parameter by giving the parameter name without a `dev` or `mod` parameter. After the analysis is complete, the modified parameter returns to its original value.

Definition

```
Name  [p]  [n] xf parameter=value ...
```

The optional terminals (p and n) specify the output of the circuit. If you do not specify the terminals, you must specify the output with a probe component.

Parameters

1	`prevoppoint=no`	Use the operating point computed in the previous analysis. Possible values are `no` and `yes`.

Sweep interval parameters

2	`start=0`	Start sweep limit.
3	`stop`	Stop sweep limit.
4	`center`	Center of sweep.
5	`span=0`	Sweep limit span.
6	`step`	Step size, linear sweep.
7	`lin=50`	Number of steps, linear sweep.
8	`dec`	Points per decade.
9	`log=50`	Number of steps, log sweep.

© 2003-2020 All Rights Reserved.

10	`values=[...]`	Array of sweep values.
11	`valuesfile`	Name of the file containing the sweep values.

Sweep variable parameters

12	`dev`	Device instance whose parameter value is to be swept.
13	`mod`	Model whose parameter value is to be swept.
14	`param`	Name of parameter to sweep.
15	`freq (Hz)`	Frequency when parameter other than frequency is being swept.

Probe parameters

16	`probe`	Compute every transfer function to this probe component.

State-file parameters

17	`readns`	File that contains an estimate of DC solution (nodeset).
18	`write`	DC operating point output file at the first step of the sweep.
19	`writefinal`	DC operating point output file at the last step of the sweep.

Initial condition parameters

20	`force=none`	The set of initial conditions to use. Possible values are `none`, `node`, `dev`, and `all`.
21	`readforce`	File that contains initial conditions.
22	`skipdc=no`	Skip DC analysis. Possible values are `no` and `yes`.

© 2003-2020 All Rights Reserved.

23	useprevic=no	If set to yes or ns, use the converged initial condition from previous analysis as ic or ns. Possible values are no, yes, and ns.

Output parameters

24	stimuli=sources	Stimuli used for xf analysis. Possible values are sources and nodes_and_terminals.
25	save	Signals to output. Possible values are all, lvl, allpub, lvlpub, selected, none, and nooutput.
26	nestlvl	Levels of subcircuits to output.
27	oppoint=no	Determines whether operating point information should be computed; if yes, where should it be printed (screen or file). Operating point information is not printed if the operating point computed in the previous analysis remains unchanged. Possible values are no, screen, logfile, and rawfile.

Convergence parameters

28	restart=yes	Restart the DC solution from scratch if any condition has changed. If not, use the previous solution as initial guess. Possible values are no and yes.

Annotation parameters

29	annotate=sweep	Degree of annotation. Possible values are no, title, sweep, status, and steps.
30	title	Analysis title.

You can define sweep limits by specifying the end points or the center value and span of the sweep. Steps can be linear or logarithmic, and you can specify the number of steps or the size of each step. You can specify a step size parameter (step, lin, log, or dec) to determine whether the sweep is linear or logarithmic. If you do not specify a step size

© 2003-2020 All Rights Reserved.

parameter, the sweep is linear when the ratio of stop to start values is less than 10 and logarithmic when this ratio is 10 or greater. All frequencies are in Hertz.

The small-signal analysis begins by linearizing the circuit about an operating point. By default this analysis computes the operating point, if it is not known, or recomputes it if any significant component or circuit parameter has changed. However, if an operating point was calculated during a previous analysis , you can set `prevoppoint=yes` to avoid recomputing it. For example, if `prevoppoint=yes` and the previous analysis was a transient analysis, the operating point is the state of the circuit at the final time point.

Nodesets help find the DC or the initial transient solution. You can specify nodesets in the circuit description file with nodeset statements, or in a separate file using the `readns` parameter. When nodesets are specified, Spectre computes an initial guess of the solution by performing a DC analysis, while forcing the specified values on to nodes by using a voltage source in series with a resistor whose resistance is `rforce`. Spectre then removes these voltage sources and resistors and computes the required solution from this initial guess.

Nodesets have two important uses. First, if a circuit has two or more solutions, nodesets can bias the simulator towards computing the required solution. Second, these are a convergence aid. By estimating the solution of the largest possible number of nodes, you might be able to eliminate a convergence problem or significantly speed up convergence.

When you simulate the same circuit multiple times, it is recommended that you use both `write` and `readns` parameters and assign the same file name to both parameters. DC analysis then converges quickly even if the circuit has changed since the last simulation, and the nodeset file is automatically updated.

During the initial operating point DC analysis, you may force some of the circuit variables to the values given in the `ic` file, `ic` statements, or `ic` parameter on the capacitors and inductors. The `ic` parameter controls the interaction of various methods of setting the force values. The effects of individual settings are as follows:

`force=none`: All initial conditions are ignored.

`force=node`: The `ic` statements are used, and the `ic` parameters on the capacitors and inductors are ignored.

`force=dev`: The `ic` parameters on the capacitors and inductors are used, and the `ic` statements are ignored.

`force=all`: Both `ic` statements and `ic` parameters are used, with the `ic` parameters overriding the `ic` statements.

If you specify an `ic` file with the `readforce` parameter, force values from the file are used, and any `ic` statements are ignored.

© 2003-2020 All Rights Reserved.

After you specify the initial conditions, Spectre computes the DC operating point with the specified nodes forced to the given value by using a voltage source in series with a resistor whose resistance is `rforce` (see `options`).

Parameter Index

In the following index, the number corresponding to each parameter name indicates where to find the description of that parameter:

annotate 29	mod 13	restart 28	title 30
center 4	nestlvl 26	save 25	useprevic 23
dec 8	oppoint 27	skipdc 22	values 10
dev 12	param 14	span 5	valuesfile 11
force 20	prevoppoint 1	start 2	write 18
freq 15	probe 16	step 6	writefinal 19
lin 7	readforce 21	stimuli 24	
log 9	readns 17	stop 3	

© 2003-2020 All Rights Reserved.

© 2003-2020 All Rights Reserved.

4

Other Simulation Topics

This chapter discusses the following topics:

- AHDL Linter Usage (ahdllint) on page 455
- Using analogmodel for Model Passing (analogmodel) on page 459
- Behavioral Source Use Model (bsource) on page 461
- Checkpoint - Restart (checkpoint) on page 470
- Configuring CMI Shared Objects (cmiconfig) on page 472
- Built-in Mathematical and Physical Constants (constants) on page 474
- Convergence Difficulties (convergence) on page 476
- encryption (encryption) on page 479
- Expressions (expressions) on page 482
- The fastdc command line option (fastdc) on page 486
- User Defined Functions (functions) on page 489
- Global Nodes (global) on page 490
- IBIS Component Use Model (ibis) on page 491
- Initial Conditions (ic) on page 498
- The Structural if-statement (if) on page 499
- Include File (include) on page 501
- Spectre Netlist Keywords (keywords) on page 503
- Library - Sectional Include (library) on page 506
- Tips for Reducing Memory Usage (memory) on page 508
- Node Sets (nodeset) on page 510

© 2003-2020 All Rights Reserved.

- Parameter Soft Limits (param_limits) on page 511
- Netlist Parameters (parameters) on page 514
- Parameter Set - Block of Data (paramset) on page 517
- Tips for Reducing Memory Usage with SpectreRF (rfmemory) on page 520
- Output Selections (save) on page 525
- Savestate - Recover (savestate) on page 528
- Sensitivity Analyses (sens) on page 532
- SpectreRF Summary (spectrerf) on page 534
- Stitch Flow Use Model (stitch) on page 535
- Subcircuit Definitions (subckt) on page 541
- Vec/Vcd/Evcd Digital Stimulus (vector) on page 546
- Verilog-A Usage and Language Summary (veriloga) on page 549

© 2003-2020 All Rights Reserved.

AHDL Linter Usage (ahdllint)

Description

The AHDL Linter technology offers a powerful set of capabilities for upfront identification of issues that worry designers even well beyond the model creation stage. The AHDL Linter feature helps identify complex design modeling issues and can be used on block simulation or SOC verifications performed just before tape out. Early warnings enable designers to avoid expensive design iterations, and meeting quality and time-to-market goals.

You can use the AHDL Linter feature to analyze Spectre APS, and Spectre XPS test cases containing Verilog-A models.

AHDL Linter checks each Verilog-A behavioral model in the design and suggests which line should be improved to:

- Avoid potential convergence or performance problems
- Improve model accuracy, reusability, and portability

AHDL linter consists of static and dynamic lint checks. Static lint checks are performed at compilation stage. Dynamic lint checks are performed during analysis for dynamic modeling issues that may cause convergence or performance problems during simulation.

Using the AHDL Linter Feature

The AHDL Linter feature is activated in Spectre APS, and Spectre XPS using the following command-line options:

```
% spectre +aps -ahdllint netlist.scs
% spectre +xps +cktpreset=sram -ahdllint netlist.scs
```

where `netlist.scs` is written using Spectre, SPICE, or eSpice syntax and includes one or more Verilog-A models.

You can perform static linter checks on a netlist file that includes one or more Verilog-A models, as follows:

spectre +aps -ahdllint=static test.scs // test.scs includes the Verilog-A files

Spectre, in this case, performs only linter checks on all Verilog-A files and does not run the simulation.

© 2003-2020 All Rights Reserved.

You can also perform static lint checks on a Verilog-A file directly without specifying the top-level netlist file (`.scs`), as follows:

spectre +aps -ahdllint=static test.va //perform static lint check on test.va

The `-ahdllint` option accepts the following arguments:

`no`	Disables lint checks. There is no change in the existing compilation or simulation error messages.
`warn`	(default) Turns on the static lint and dynamic lint checks. Except the models with attribute (`* ahdllint = "no" *`), the static lint checks all models, continues the simulation, and then performs dynamic lint checks.
`error`	Turns on the static lint check. Dynamic lint checks are performed only when static lint issues are not detected. Except the models with attribute (`* ahdllint = "no" *`), the static lint checks all models. The simulator generates an error and exits if there is any static lint warning reported after compiling all the models of the circuit. If there are no static lint warnings, the simulator continues the simulation and performs dynamic lint checks. However, in the case of dynamic lint issues, the simulator does not error out.
`force`	Similar to `warn`, but this option overrides the model attribute `(* ahdllint = "no" *)`, and forces to check all models, continue the simulation, and perform dynamic lint checks.
`static`	Performs static lint checks on a Verilog-A file directly.

Note: The `-ahdllint` option can be used without any argument, which is equivalent to specifying `-ahdlint=warn`. You can also set the `-ahdllint` option as default by setting the `SPECTRE_DEFAULTS` environment variable, as follows:

```
setenv SPECTRE_DEFAULTS "-ahdllint=warn"
```

You can use the `-ahdllint_maxwarn =n` command-line option to control the maximum number of static and dynamic warnings. The default value is 5.

You can also control the maximum number of warnings by using the environment variable `SPECTRE_DEFAULTS` or `ULSTRASIM_DEFAULTS`, as show below.

```
setenv SPECTRE_DEFAULTS "-ahdllint -ahllint_maxwarn=10"
setenv ULSTRASIM_DEFAULTS "-ahdllint -ahllint_maxwarn=10"
```

You can use the `-ahdllint_warn_id=<`*`ID`*`>` option to control the warning messages for a specific message ID. *`ID`* should be a positive integer value between 5001 and 6000 or 8001

© 2003-2020 All Rights Reserved.

and 9999. In addition, the `-ahdllint_warn_id` option should always be used with the `-ahdllint_maxwarn` option and should be directly specified after it in the command line, otherwise, the option will be ignored. For example:

```
spectre +aps -ahdllint -ahdllint_maxwarn=2 -ahdllint_warn_id=5001 input.scs
```

In the above example, Spectre will display only two warning messages related to the message ID 5001.

You can specify the `-ahdllint_maxwarn` and `-ahdllint_warn_id` options multiple times at the command line. For example:

spectre +aps -ahdllint -ahdllint_maxwarn=1 -ahdllint_warn_id=5001 -ahdllint_maxwarn=3 -ahdllint_warn_id=8001 input.scs

In the above example, only one warning message related to the message ID 5001 will be displayed. In addition, three warning messages related to the message ID 8001 will be displayed.

You can also specify multiple IDs with the `-ahdllint_warn_id` option. However, the IDs must be specified using double quotes with a space between them. For example:

spectre +aps -ahdllint -ahdllint_maxwarn=2 -ahdllint_warn_id="5001 5003 5005" input.scs

Use the `-ahdllint_minstep=value` command-line option to set the minimal time step size boundary that will trigger an AHDL Linter warning, when the step size imposed by a Verilog-AMS filter or function, such as `transition`, `cross`, `above`, `$bound_step`, and `timer` is smaller than `value`. The default value is `1e-12`.

You can use the `-ahdllint_summary_maxentries=<`*`value`*`>` command-line option to control the maximum number of messages to be displayed in dynamic lint summary. The default value is 25. For example:

```
spectre -ahdllint_summary_maxentries=20 input.scs
```

By default, the static and dynamic lint warnings and the dynamic lint summary output are sent to the simulation log file. You can use the `-ahdllint_log=file` command-line option to output all the information to a specified file instead of the output log file.

Filtering AHDL Messages

You can filter the AHDL Linter messages using the `options` control statement, as follows:

```
Name options warning_limit=num warning_id=id
```

where:

© 2003-2020 All Rights Reserved.

`warning_limit` specifies the number of messages to be printed.

`warning_id` specifies the message id that needs to be printed.

Example1

```
myoptions options warning_limit=0 warning_id=[AHDLLINT-8004 AHDLLINT-8005]
```

In the above example, Spectre APS/XPS will not print any message with the id `AHDLLINT-8004` and `AHDLLINT-8005`.

Example2

```
myoptions2 options warning_limit=1 warning_id=[AHDLLINT-8005]
```

In the above example, Spectre APS/XPS will print only one message with the id `AHDLLINT-8005`.

For more information about the `options` control statement, see `spectre -h options`.

Using the ahdlhelp Utility

You can use the `ahdlhelp` utility to view the extended help on various messages reported by AHDL Linter. To view the extended help, you need to provide the AHD Linter id number as an argument, as shown below.

```
% ahdlhelp 8005
```

The following is an example of the `ahdlhelp` utility:

```
% ahdlhelp 5012
AHDLLINT-5012: Detected $abstime in an equality expression inside a conditional.
Analog simulations select timepoints using a variable timestep size algorithm based
on accuracy considerations, so the value of "time" only changes between discrete
real values.  In order to perform an event at a particular time, the @(timer)
construct must be used to tell the simulator to step to a particular timepoint and
execute the desired code when that event actually occurs.
example:
  if ($abstime==50n) xval=2;
solution:
  @(timer(50n)) xval=2;
```


© 2003-2020 All Rights Reserved.

Using analogmodel for Model Passing (analogmodel)

Description

`analogmodel` is a reserved word in Spectre that allows you to bind an instance to different masters based on the value of a special instance parameter called `modelname`. An instance of `analogmodel` must have a parameter named `modelname`, whose string value represents the name of the master this instance will be bound to. The value of `modelname` can be passed into subcircuits.

The `analogmodel` keyword is used by the Cadence Analog Design Environment to enable model name passing through the schematic hierarchy.

Sample Instance Statement

```
name [()node1 ... nodeN()] analogmodel modelname=mastername [[param1=value1]
...[paramN=valueN]]
```

name	Name of the statement or instance label.
`[()node1...nodeN()]`	Names of the nodes that connect to the component.
`analogmodel`	Special device name to indicate that this instance will have its master name specified by the value of the `modelname` parameter on the instance.
`modelname`	Parameter to specify the master of this instance indicated by `mastername`. The `mastername` must either be a valid string identifier or a netlist parameter that must resolve to a valid master name, a primitive, a model, a subckt, or an AHDL module.
`param1 param2...`	Parameter values for the component. Depending on the master type, these can either be device parameters or netlist parameters. It is optional to specify these parameter values.

Example

```
//example spectre netlist to illustrate modelname parameter

simulator lang=spectre
parameters b="bottom"
include "VerilogAStuff.va"

topInst1 (out in) top
topInst2 (out in) analogmodel modelname="VAMaster" //VAMaster is defined in
                                                     "VerilogAStuff.va"
topInst3 (out in) analogmodel modelname="resistor" //topInst3 binds to a primitive
topInst4 (out 0) analogmodel modelname="myOwnRes" //topInst4 binds to modelcard
```


© 2003-2020 All Rights Reserved.

```
                                                        "myOwnRes" defined below
v1 in 0 vsource dc=1
    model myOwnRes resistor r=100
    subckt top out in
    parameters a="mid"
    x1 (out in) analogmodel modelname=a //topInst1.x1 binds to "mid"
ends top
subckt mid out in
    parameters c="low"
    x1 (out in) analogmodel modelname=b //topInst1.x1.x1 binds to "bottom"
    x2 (out in) analogmodel modelname=c //topInst1.x1.x1.x2 binds to "low"
ends mid
subckt low out in
    x1 (out in) analogmodel modelname="bottom" //topInst1.x1.x1.x2.x1 binds to
                                                  "bottom"
ends low
subckt bottom out in
    x1 (out in) analogmodel modelname="resistor" //x1 binds to primitive "resistor"
ends bottom
dc1 dc
//"VerilogAStuff.va"
`include "constants.h"
`include "discipline.h"
module VAMaster(n1, n2);
inout n1, n2;
electrical n1, n2;
parameter r=1k;
analog begin
I(n1, n2) <+ V(n1, n2)/r;
end
endmodule
```


© 2003-2020 All Rights Reserved.

Behavioral Source Use Model (bsource)

Description

Behavioral source enables you to model a resistor, inductor, capacitor, voltage or current source as a behavioral component. Using bsource, you can express the value of a resistance, capacitance, voltage or current as a combination of node voltages, branch currents, time expression, and built-in Spectre expressions.

The syntax for bsource is as follows:

```
name (node1 node2) bsource behav_param param_list
```

where `behav_param` can be:

`c=simple_expr`,	capacitance between the nodes
`g=simple_expr`,	conductance between the nodes
`i=generic_expr`,	current through bsource
`l=simple_expr`,	inductance between the nodes
`phi=simple_expr`,	flux in the bsource device
`q=simple_expr`,	charge in bsource device
`r=simple_expr`,	resistance between the nodes
`v=generic_expr`,	voltage across the nodes

`simple_expr` is defined as an Spectre expression, which contains:

- Netlist parameters.
- Current simulation time, `$time`.
- Current frequency, `$freq`.
- Node voltage, `v(a,b)`, where `a` and `b` are nodes in the Spectre netlist, or node voltage `v(a)`, which is the voltage between node `a` and ground.
- Branch currents, `i("inst_id:index")`, where `inst_id` is an instance name given in the netlist and index is the port index that starts from 1. The default value of index is 1.

  Note: If the value of the port index is set to 0, simple_expr treats it as the default value 1.

`generic_expr` is defined as a `simple_expr` or `ddt()` or `idt()` of `simple_expr`.

© 2003-2020 All Rights Reserved.

param_list is param_name=value.

param_name can have the multiplicity factor m. The value of m defaults to 1.

Temperature Parameters

tc1	Linear temperature co-efficient. Valid for all behavioral elements. Default value is 0 1/C.
tc2	Quadratic temperature co-efficient. Valid for all behavioral elements. Default value is 0 C^-2.
temp	Parameter for ambient temperature. Valid for all behavioral elements. Default value is $temperature - 273.15.
tnom	Parameters measurement temperature. Valid for all behavioral elements. Default value is 27.0.
trise	Temperature rise for ambient. Valid for all behavioral elements. Default value is 0.0.
T	Effective value of temperature. Valid for all behavioral elements. Default value is temp+trise-tnom.
tc1c	Linear temperature coefficient of capacitor. Valid for resistor type behavioral element. Default value is 0 1/C.
tc2c	Quadratic temperature coefficient of capacitor. Valid for resistor type behavioral element. Default value is 0 C^-2.

Clipping Parameters

max_val	Maximum value of bsource expression. Valid for all behavioral elements, but used with i and v elements to clip the current or voltage between the specified values.
min_val	Minimum value of bsource expression. Valid for all behavioral elements, but used with i and v elements to clip the current or voltage between the specified values.
bv_max	Generate a warning when bsource voltage of two terminals exceeds the value specified by bv_max. Valid for resistor and capacitor.

© 2003-2020 All Rights Reserved.

Noise Parameters

af	Flicker noise exponent. Valid for r and g elements. Default value is 2.
fexp	Flicker noise frequency exponent. Valid for r, g, v, and i elements. Default value is 1.
ef	The alias parameter of fexp.
ldexp	Flicker (1/f) noise L exponent. Valid for r and g elements. Default value is 1.0.
lf	The alias parameter of ldexp.
wdexp	Flicker (1/f) noise W exponent. Valid for r and g elements. Default value is 1.0.
wf	The alias parameter of wdexp.
isnoisy	Specifies whether to generate noise. Valid for r, g, i, and v elements. Valid values are yes and no. Default value is yes.
kf	Flicker noise co-efficient. Valid for r and g elements. Default value is 0.
white_noise	White noise expression. Valid for v and i elements.
flicker_noise	Flicker noise expression. Valid for v and i elements.

DC Mismatch Parameters

mr	DC-Mismatch parameter. Valid only for r.

Other Parameters

scale, scaleb, scaler, scalei, scalec	Bsource scaling factor. Default value is 1.0.

© 2003-2020 All Rights Reserved.

`ctype`	Different implementations of a capacitor. When the value is 1, bsource current is `ddt(cap*V(node1, node2))`, where `cap` is the bsource capacitor value with temp effect, mfactor effect, scale effect and so on. `V(node1, node2)` is the voltage between the bsource terminals. When the value is 2, the current is `ddt(cap)`. When the value is 0 or any other value, the current value is `cap*ddt(V(node1, node2))`. Default value is 0.

For the detailed algorithm, refer to "*Affirma Spectre DC Device Matching Analysis Tutorial*."

All the parameters in the `param_name` table are instance parameters. `white_noise` and `flicker_noise` may be assigned behavioral expressions; the other parameters must be assigned constant or parametric expressions.

Supported Instance Parameters

`bsource` supports the following instance parameters for Spectre primitives:

Resistor	`isnoisy`, `m`, `r`, `tc1`, `tc2`, `trise`, `kf`, `af`, `fexp`, `ldexp`, `wdexp`, `l`, `w`, `mr`
Capacitor	`c`, `m`, `tc1`, `tc2`, `trise`, `ic`, `ctype`
Inductor	`l`, `m`, `tc1`, `tc2`, `trise`

Mathematical Definitions

- `i = ddt(q) = ddt(simple_expr)`
- `v = ddt(phi) = ddt(simple_expr)`
- `v = i * r = i* simple_expr`
- `i = g * v = simple_expr * v`
- `i = c * ddt(v) = simple_expr * ddt(v)`
- `v = l * ddt(i) = simple_expr * ddt(i)`

© 2003-2020 All Rights Reserved.

Operating Point Parameters

Capacitor

`cap (F)`	Capacitance at operating point

Conductor

`g (S)`	Conductance at operating point
`v (V)`	Voltage at operating point
`i (A)`	Current through the conductor
`pwr (W)`	Power dissipation.

Current Source

`v (V)`	Voltage across the source
`i (A)`	Current through the source
`pwr (W)`	Power dissipation

Inductor

`ind (H)`	Inductance at operating point
`i (A)`	Current at operating point

Charge

`cap (F)`	Capacitance at operating point
`ddt_v (V/s)`	Voltage gradient at operating point

Resistor

`v (V)`	Voltage at operating point
`i (A)`	Current through the resistor

© 2003-2020 All Rights Reserved.

`res (Ohm)`	Resistance at operating point
`pwr (W)`	Power dissipation

Voltage Source

`v (V)`	Voltage across the source
`i (A)`	Current through the source
`pwr (W)`	Power dissipation

Temperature Effects on bsource

The equation for computing temperature factor is as follows:

```
tempFactor = [1 + tc1*(temp+trise-tnom)+tc2*(temp+trise-tnom)^2]
```

Frequency Effects on bsource

The support for frequency-dependent bsource is available. You can use a frequency-dependent resistor, capacitor, inductor, or bsource component in ac/noise/xf/sp/hb/hbac/hbnoise analyses.

The syntax is as follows:

```
name ( node1 node2 ) model_name behav_param=freq_expression
```

where:

- `name` is the name of the instance
- `model_name` can be bsource, resistor, capacitor, and inductor
- `behav_param` is the r, c or l parameter.
- `freq_expression` can be specified by arbitrary expressions using the `$freq` keyword.

Following are some examples using `$freq`:

```
res (n1 n2) bsource r= 100 + sqrt($freq)/1e6
res (n1 n2) resistor  r= 100 + sqrt($freq)/1e6
cap (n1 n2) bsource c=1e-12/(1+($freq)/1e9)
cap (n1 n2) capacitor c=1e-12/(1+($freq)/1e9)
ind (n1 n2) bsource l=1e-9+1e-9/(1+($freq)/1e9)
ind (n1 n2) inductor l=1e-9+1e-9/(1+($freq)/1e9)
```


© 2003-2020 All Rights Reserved.

Examples of bsource Usage

Non-linear resistor/capacitor/inductor modeling

Frequency-dependent resistor component

```
res1  (n1 n2)  bsource r=100*(1+(1/2)*v(n1,n2))
res2  (n1 n2)  resistor r=100*(1+(1/2)*v(n1,n2))
```

In this example, the resistance of `res1` is frequency-dependent. Therefore, if you run hb and hbnoise analyses for different frequencies, the resistance varies accordingly.

Frequency-dependent capacitor component

```
C1  (1  0) capacitor c=1e-12/(1+($freq)/1e9)
V1 (1 0 ) vsource type=sine freq=1G  fundname="freq"
ac ac start=1 stop=100M
hb hb tstab=0n funds=["freq"] maxharms=[5] errpreset=conservative
hbac hbac start=1 stop=1G dec=3
```

In this example, the capacitance of `C1` is frequency-dependent. Therefore, if you run hb and hbnoise analyses for different frequencies, the capacitance varies accordingly.

Frequency-dependent inductor component

```
L1  (1  0) inductor l=1e-9+1e-9/(1+($freq)/1e9)
V1 (1 0 ) vsource type=sine freq=1G  fundname="freq"
ac ac start=1 stop=100M
hb hb tstab=0n funds=["freq"] maxharms=[5] errpreset=conservative
```

In this example, the inductance of `L1` is frequency-dependent. Therefore, if you run hb analysis for different frequencies, the inductance varies accordingly.

Charge model for capacitor

```
cap  (n1 n2) bsource q=1.0e-6*v(n1,n2)
```

Voltage and current (Sinewave) source

```
vsrc (n1 n2) bsource v=10.0*sin(2*pi*freq*$time)
isrc (n1 n2) bsource i=1.0e-3*sin(2*pi*freq*$time)
```

Current-controlled current source

```
vsrc (n1 n2) vsource v=10
cccs1 (n3 n4) bsource i=gain*i("vsrc:1")
```

Current-controlled voltage source

```
vsrc (n1 n2) vsource v=10
```


© 2003-2020 All Rights Reserved.

```
ccvs1 (n3 n4) bsource v=100*i("vsrc:1")
```

Voltage-controlled voltage source

```
vsrc (n1 n2) resistor r=100k
vcvs1 (n3 n4) bsource v=gain*v(n1,n2)
```

Voltage-controlled current source

```
vsrc (n1 n2) resistor r=100k
vccs1 (n3 n4) bsource i=v(n1,n2)/2000.0
```

Restricting voltage limit

```
res (n1 n2) bsource r=100*(1+(1/2)*v(n1,n2)) max_val=105 min_val=95
```

Using temperature coefficient for resistor

```
res (n1 n2) bsource r=100  tc1=0.01 tc2=0.003 trise=10 tnom=30
```

Using DC mismatch parameter for resistor

```
res (n1 n2) bsource r=100  mr=0.3
```

Using model card

```
model model_card_res resistor tc1=0.1 tc2=0.1
res (n1 n2) model_card_res r=100*(1+(1/2)*v(n1,n2))
```

Sample netlist with bsource

```
vsrc1 (n1 n2) bsource v=10*sin(2*pi*freq1*$time)
vsrc2 (n3 n4) bsource v=10*cos(2*pi*freq2*$time)
cccs1 (n5 n6) bsource i=gain*i("vsrc1:1")
res   (n5 n6) bsource r=100*(1+(1/2)*v(n5,n6))

tran1 tran stop=1u

altAnal altergroup {
    cccs1 (n5 n6) bsource i=gain*i("vsrc2:1")
    res   (n5 n6) bsource r=100*(1+(1/3)*pow(v(n5,n6),2))
}
tran2 tran stop=1u
```

Note: With standard (simple) syntax for resistor/capacitor/inductor, the `bsource` keyword is not required in the statement. However, if the keyword is specified, Spectre treats the resistor/capacitor/inductor as a behavioral source.

© 2003-2020 All Rights Reserved.

bsource Compilation

Spectre automatically translates bsource components into verilogA models for simulation. As such, they are compiled prior to simulation just like any other verilogA model.

© 2003-2020 All Rights Reserved.

Checkpoint - Restart (checkpoint)

Description

Spectre has the ability to save the checkpoint files generated during analyses, and to restart an analysis from its checkpoint file. Checkpoint files can be generated in the following ways:

- Periodically, based on real time (wall clock time).
- Asynchronous UNIX signals.
- By other methods unique to the analyses.

To generate checkpoint files periodically based on real time, set the Spectre option `ckptclock` to the time interval, in seconds. This option is turned on by default with a value of 1800 seconds (30 minutes). Spectre deletes the checkpoint file if the simulation completes normally. If the simulation terminates abnormally, the checkpoint file is not deleted.

If Spectre receives the UNIX signal `USR2`, Spectre immediately writes a checkpoint file. If Spectre receives interrupt signals, such as `QUIT`, `TERM`, `INT`, or `HUP`, Spectre attempts to write a checkpoint file and then exits. For other fatal signals, Spectre may not write a checkpoint file.

The name of the checkpoint file is a combination of the circuit name and the analysis name with the extension `.ckpt`. For example, if the circuit is named `test1` and the transient analysis is named `timeSweep`, the checkpoint file is named `test1.timeSweep.tran.ckpt`.

Spectre keeps only the latest checkpoint file. It creates a new checkpoint file with a temporary name. After the file is successfully written, Spectre deletes the previous checkpoint file created earlier and renames the new file.

Currently, only transient analysis supports checkpoint files and restart.

Checkpoint

Transient analysis can generate checkpoint files periodically based on the transient simulation time. This is done by using a transient analysis parameter named `ckptperiod`, which is turned off by default. To enable the checkpoint feature, the argument `+checkpoint` must be added to the `spectre` command.

© 2003-2020 All Rights Reserved.

Restart

To restart an analysis from a checkpoint file, use the `+recover` option with the `spectre` command. Spectre searches the analyses log for the checkpoint file. If the checkpoint file for the analysis exists, Spectre skips over any previous analyses, and restarts the analysis by using the information from the file.

For more information, see *Recovering From Transient Analysis Terminations* section in the *Spectre Classic Simulator, Spectre APS, Spectre X, and Spectre XPS User Guide*.

© 2003-2020 All Rights Reserved.

Configuring CMI Shared Objects (cmiconfig)

Description

Spectre supports the ability to install devices dynamically from shared objects at run time. CMI Configuration files are used to determine and locate the set of shared objects to be installed as follows:

1. Spectre first reads the default CMI configuration file that specifies the default shared objects provided by Cadence.
2. The configuration file specified by the value of the `CMI_CONFIG` environment variable is then read.
3. The third configuration file that Spectre reads is `~/.cmiconfig`.
4. Finally, the configuration file specified in the `-cmiconfig` command-line argument is read.

Each CMI configuration file modifies the existing configuration established by the configuration files read before.

The following commands can be used in a CMI configuration file.

`setpath`: Specifies and resets the search path

```
setpath <path> or setpath ( <path1> <path2> ... <pathN> )
```

`prepend`: Adds a path before the current search path

```
prepend <path> or prepend ( <path1> <path2> ... <pathN> )
```

`append`: Adds a path after the current search path

```
append <path> or append ( <path1> <path2> ... <pathN> )
```

`load`: Adds a shared object to the list of shared objects to load

```
loads [path/]<shared_object_name>
```

`unload`: Removes a shared object from the list of shared objects to load

```
unload <shared_object_name>
```

For example, given the following CMI configuration file:

```
append /hm/MMSIM_INSTALL/tools.lnx86/cmi/lib/cmi/5.0
load libbjtx+tfet.so
load libmosx.so
```


© 2003-2020 All Rights Reserved.

The shared objects `libbjtx+tfet.so` and `libmosx.so` are loaded from `/hm/MMSIM_INSTALL/tools.lnx86/cmi/lib/cmi/5.0`, in addition to the default shared objects provided by Cadence.

For more information, refer to the *Using Compiled-Model Interface* chapter in the *Spectre Classic Simulator, Spectre APS, Spectre X, and Spectre XPS User Guide*.

© 2003-2020 All Rights Reserved.

Built-in Mathematical and Physical Constants (constants)

Description

Spectre supports the following list of built-in mathematical and physical constants:

Note: `M_` is a mathematical constant

M_E	2.7182818284590452354	exp(1) = e
M_LOG2E	1.4426950408889634074	log2(e)
M_LOG10E	0.43429448190325182765	log10(e)
M_LN2	0.69314718055994530942	ln(2)
M_LN10	2.30258509299404568402	ln(10)
M_PI	3.14159265358979323846	pi
M_TWO_PI	6.28318530717958647652	2 * pi
M_PI_2	1.57079632679489661923	pi/2
M_PI_4	0.78539816339744830962	pi/4
M_1_PI	0.31830988618379067154	1/pi
M_2_PI	0.63661977236758134308	2/pi
M_2_SQRTPI	1.12837916709551257390	2/sqrt(pi)
M_SQRT2	1.41421356237309504880	sqrt(2)
M_SQRT1_2	0.70710678118654752440	sqrt(1/2)
M_DEGPERRAD	57.2957795130823208772	number of degrees per radian

Note: `P_` is a physical constant

P_Q	1.6021918e-19	charge of electron in coulombs
P_C	2.997924562e8	speed of light in vacuum in meters/sec
P_K	1.3806226e-23	Boltzmann's constant in joules/Kelvin

© 2003-2020 All Rights Reserved.

P_H	6.6260755e-34	Planck's constant in joules*sec
P_EPS0	8.854187923944200139 68e-12	permittivity of vacuum in farads/ meter
P_U0	(4.0e-7 * M_PI)	permeability of vacuum in henrys/ meter
P_CELSIUS0	273.15	zero Celsius in Kelvin

These constants can be used in expressions, or anywhere where a numeric value of the expression is expected.

© 2003-2020 All Rights Reserved.

Convergence Difficulties (convergence)

Description

If you are having convergence difficulties, try the following suggestions:

1. Evaluate and resolve any notice, warning, or error messages.
2. Ensure that the topology checker is being used (set topcheck=full on options statement) and heed any warnings it generates.
3. Perform sanity check on the parameter values by using the parameter range checker (use `+param param-limits-file` as a command line argument) and heed any warnings. Print the minimum and maximum parameter value by using `info` analysis. Ensure that the bounds given for instance, model, output, temperature-dependent, and operating-point (if possible) parameters are reasonable.
4. Small floating resistors connected to high impedance nodes can cause convergence difficulties. Avoid small floating resistors, particularly small parasitic resistors in semiconductors. Instead, use voltage sources or iprobes to measure current.
5. Use realistic device models. Check all component parameters, particularly nonlinear device model parameters, to ensure that they are reasonable.
6. Increase the value of gmin (on options statement).
7. Loosen tolerances, particularly absolute tolerances like `iabstol` (on options statement). If tolerances are set too tight, they might preclude convergence.
8. Try to simplify the nonlinear component models to avoid regions that might contribute to convergence problems in the model.

DC Convergence Suggestions

After you have a solution, write it to a nodeset file by using the `write` parameter, and read it back in on subsequent simulations by using the `readns` parameter.

1. If you have an estimate of what the solution should be, use `nodeset` statements or a nodeset file, and set as many nodes as possible.
2. If convergence difficulties occur when using nodesets or initial conditions, try increasing `rforce` (on options statement).
3. If this is not the first analysis and the solution from the previous analysis is far from the solution for this analysis, set `restart=yes`.

© 2003-2020 All Rights Reserved.

4. If simulating a bipolar analog circuit, ensure that the region parameter on all transistors and diodes is set correctly.
5. If the analysis fails at an extreme temperature, but succeeds at room temperature, try adding a DC analysis that sweeps temperature. Start at room temperature, sweep to the extreme temperature, and write the final solution to a `nodeset` file.
6. Use numeric pivoting in the sparse matrix factorization by setting `pivotdc=yes` (on options statement). Sometimes, it is also necessary to increase the pivot threshold to a value in the range of 0.1 to 0.5 by using `pivrel` (on options statement).
7. Divide the circuit into smaller pieces and simulate them individually. However, ensure that the results are close to what they would be if you had simulated the whole circuit. Use the results to generate nodesets for the whole circuit.
8. Check the connections to ground. Convergence problems might result if there are no connections to ground.
9. If all else fails, replace the DC analysis with a transient analysis and modify all the independent sources to start at zero and ramp to their DC values. Run transient analysis well beyond the time when all the sources have reached their final value (remember that transient analysis is cheap when none of the signals in the circuit are changing) and write the final point to a `nodeset` file. To make transient analysis more efficient, set the integration method to backward Euler (`method=euler`) and loosen the local truncation error criteria by increasing `lteratio`, say to 50. Occasionally, this approach fails, or is slow because the circuit contains an oscillator. Often, for finding the dc solution, the oscillation can be eliminated by setting the minimum capacitance from each node to ground (`cmin`) to a large value.

Transient Convergence Suggestions

1. Ensure that a complete set of parasitic capacitors is used on nonlinear devices to avoid jumps in the solution waveforms. On MOS models, specify nonzero source and drain areas.
2. Use the `cmin` parameter to install a small capacitor from every node in the circuit to ground. This usually eliminates any jump in the solution.

© 2003-2020 All Rights Reserved.

The dcopt command line option (dcopt)

Description

The `dcopt` option speeds up the DC simulation in Spectre and APS for post-layout circuits that consist of large number of parasitic resistors and capacitors, which require significant time in DC simulation. It can also be used to solve the non-convergence issues in DC simulations of any other circuit.

Note: In some cases, the DC solution obtained using the `dcopt` command-line option may not be as accurate as the true DC solution.

Definition

```
+dcopt in the command line
```


© 2003-2020 All Rights Reserved.

encryption (encryption)

Description

Encryption enables you to protect your proprietary parameters, subcircuits, models, netlists, and release your libraries to your customers without revealing sensitive information.

1. Define Encryption blocks in the netlist

   Keywords (`protect`, `unprotect`) are used for defining an encryption `block`. The dot keywords are used in the context of the spice mode: `.protect`, `.unprotect`.`protect`, `unprotect` can be abbreviated to `prot`, `unprot`(or, `.prot`, `.unprot` in spice).

   If the whole file needs to be encrypted, one method is to put `protect` at the beginning of the file and `unprotect` at the end of the file. Alternatively,you can use the `-all` option of the spectre encrypt command.

   Examples of netlist with protected blocks:

   Example: Protection of subckts

   ```
   protect
   subckt sub1 ( ... )
   ....
   ends sub1
   subckt sub2 ( ... )
   .....
   ends sub2
   unprotect
   ```

2. **Encrypt the netlist**

   `spectre_encrypt` is a standalone encryptor, and is used as follows:

   ```
   spectre_encrypt [-i input_file] [-o output_file] [-all]
   ```

   where

   `[-i Input_file]`: Netlist to be encrypted

   `[-o output _file]`: Output file of the encrypted netlist

   `[-all]`: The whole file will be encrypted in the input netlist

   Note: You can separately encrypt the include files or the library files in the netlist. Spectre encryptor does not encrypt the included files automatically.

© 2003-2020 All Rights Reserved.

3. Simulate the encrypted netlist

There is no difference in how you run Spectre on an encrypted or unencrypted netlist. Spectre automatically decrypts an encrypted netlist.

For encrypted netlists, Spectre turns on the protection for devices, models, signals, and parameters in the encrypted blocks. Any error or warning messages and the outputs from the protected information is suppressed or filtered out.

The following list describes how protection is implemented:

- Circuit inventory does not include encrypted parts.
- The `info` command suppresses all information on encrypted parts.
- Errors on encrypted parts are reported as:

  ```
  Error has occurred within the encrypted block (no details are given).
  ```

- If a portion of the model is encrypted, the entire model is encrypted.
- Any command that references the protected elements results in an error message reporting that those elements do not exist.
- Protected device and model parameters cannot be altered directly through alter. However, if they depend on other alterable parameters, protected parameters are recalculated. Protected devices and models can be replaced in the altergroup.
- Protected nodes are output in an encrypted format when the `ic` file is requested (similarly, for nodes in checking point and restart).
- The encryption feature is not available in models using CMI 2.0.

4. Output operating points on protected devices

By default, all information about the protected devices is suppressed and is not visible. However, IP providers have the control to expose the operating points of the protected devices to the end users for back annotation.

Keywords (`visible`, `invisible`) or (`.visible`, `.invisible`) in the spice netlist content are defined to expose the operating points of encrypted devices.

The operating point of the protected devices between visible and invisible is not suppressed by adding `what=oppoints` to the `visible` statement.

For example:

```
prot
x1 n1 n2 n3 n4  nmos
visible what=oppoints
x2  n5 n6 n7 n8  nmos
```


© 2003-2020 All Rights Reserved.

```
x3  n9 n10 n10 n8 pmos
invisible
X4   n11 n12 n13 n13 pmos
unprot
```

For more information, refer to the *Encryption* chapter in *Spectre Classic Simulator, Spectre APS, Spectre X, and Spectre XPS User Guide*.

© 2003-2020 All Rights Reserved.

Expressions (expressions)

Description

An expression is a construct that combines operands with operators to produce a result that is a function of the values of the operands and the semantic meaning of the operators. Any legal operand is also an expression in itself. Legal operands include numeric constants and references to the top-level netlist parameters or subcircuit parameters. Calls to algebraic and trigonometric functions are also supported. The supported operators, algebraic, and trigonometric functions are listed after the examples.

Examples:

```
simulator lang=spectre
parameters p1=1 p2=2            // declare some top-level parameters
r1 (1 0) resistor r=p1          // the simplest type of expression
r2 (1 0) resistor r=p1+p2       // a binary (+) expression
r3 (1 0) resistor r=5+6/2       // expression of constants, = 8
x1 s1 p4=8      // instantiate a subcircuit, defined in the following lines
subckt s1
parameters p1=4 p3=5 p4=6       // subcircuit parameters
r1 (1 0) resistor r=p1              // another simple expression
r2 (1 0) resistor r=p2*p2           // a binary multiply expression
r3 (1 0) resistor r=(p1+p2)/p3      // a more complex expression
r4 (1 0) resistor r=sqrt(p1+p2)     // an algebraic function call
r5 (1 0) resistor r=3+atan(p1/p2)   // a trigonometric function call
r6 (1 0) RESMOD r=(p1 ? p4+1 : p3)  // the ternary operator
ends
//  a model card, containing expressions
model RESMOD resistor tc1=p1+p2 tc2=sqrt(p1*p2)
//  some expressions used with analysis parameters
time_sweep tran start=0 stop=(p1+p2)*50e-6 // use 5*50e-6 = 150 us
//  a vector of expressions (see notes on vectors below)
dc_sweep dc param=p1 values=[0.5 1 +p2 (sqrt(p2*p2)) ]  // sweep p1
```

Using Expressions:

The Spectre native netlist language allows expressions to be used where numeric values are expected on the right-hand side of an "=" sign, or within a vector, where the vector itself is on the right-hand side of an "=" sign. Expressions can be used when specifying device or analysis instance parameter values (for example, specifying the resistance of a resistor or the stop time of a transient analysis, as outlined in the preceding example), when specifying

© 2003-2020 All Rights Reserved.

model parameter values in model cards (for example, specifying `bf=p1*0.8` for a bipolar model parameter, bf), or when specifying initial conditions and nodesets for individual circuit nodes.

Operators

The following operators are supported, listed in the order of decreasing precedence. Parentheses can be used to change the order of evaluation. For a binary expression, such as `a+b`, `a` is the first operand and `b` is the second operand. All operators are left associative, with the exceptions of the "to the power of" operator (**) and the ternary operator (? :), which are right associative. For logical operands, any nonzero value is considered true. The relational and equality operators return a value of 1 to indicate true, or 0 to indicate false. There is no short circuiting of logical expressions involving && and ||.

Operator	Symbol(s)	Value
Unary +, Unary -	`+, -`	Value of operand, negative of operand.
To the power of	`**`	First operand raised to the power of second operand
Multiply, Divide	`*, /`	Sum, Difference of operands
Binary Plus/Minus	`+, -`	Sum, Difference of operands
Shift	`<<, >>`	First operand shifted left or right by the number of bits specified by the second operand
Relational	`<, <=, >, >=`	Less than, less than or equal, greater than, greater than or equal
Equality	`==, !=`	True if operands are equal, not equal
Bitwise AND	`&`	Bitwise AND (of integer operands)
Bitwise Exclusive NOR	`~^ (or ^~)`	Bitwise Exclusive NOR (of integer operands)
Bitwise OR	`|`	Bitwise OR (of integer operands)
Logical AND	`&&`	True only if both operands are true.
Logical OR	`||`	True if either operand is true
Ternary Operator	`(cond) ? x : y`	Returns x if `cond` is `true`, and y if `cond` is false, where x and y are expressions

© 2003-2020 All Rights Reserved.

Algebraic and Trigonometric Functions

The trigonometric and hyperbolic functions expect their operands to be specified in radians. The atan2() and hypot() functions are useful for converting from Cartesian to polar form.

Function	Description	Domain
`log(x)`	Natural logarithm	x > 0
`ln(x)`	Natural logarithm	x > 0
`log10(x)`	Decimal logarithm	x > 0
`exp(x)`	Exponential	x < 80
`sqrt(x`	Square Root	x > 0
`min(x,y)`	Minimum value	All x, all y
`max(x,y)`	Maximum value	All x, all y
`abs(x)`	Absolute value	All x
`pow(x,y`	x to the power of y	All x, all y
`int(x)`	integer value of x	All x
`floor(x)`	largest integer <= x	All x
`ceil(x)`	smallest integer >= x	All x
`fmod(x,y)`	floating point modulus	All x, all y, except y=0
`sgn(x)`	The sign of x	All x
`sign(x,y)`	sgn(y)*fabs(x)	All x, all y
`sin(x)`	Sine	All x
`cos(x)`	Cosine	All x
`tan(x)`	Tangent	All x, except x = n*(pi/2), where n odd
`asin(x)`	Arc-sine	-1 <= x <= 1
`acos(x)`	Arc-cosine	-1 <= x <= 1
`atan(x)`	Arc-tangent	All x

© 2003-2020 All Rights Reserved.

`atan2(x,y)`	Arc-tangent of x/y	All x, all y
`hypot(x,y)`	sqrt(x*x + y*y)	All x, all y
`sinh(x)`	Hyperbolic sine	All x
`cosh(x)`	Hyperbolic cosine	All x
`tanh(x)`	Hyperbolic tangent	All x
`asinh(x)`	Arc-hyberbolic sine	All x
`acosh(x)`	Arc-hyperbolic cosine	x >= 1
`atanh(x)`	Arc-hyperbolic tangent	-1 <= x <= 1

User-defined functions are also supported. See `spectre -h functions` for a description of user-defined functions.

A large number of built-in mathematical and physical constants are available for use in expressions. See `spectre -h constants` for a list of these constants.

Using Expressions in Vectors

Expressions can be used as vector elements, as in the following example:

```
dc_sweep dc param=p1 values=[0.5 1 +p2 (sqrt(p2*p2)) ]  // sweep p1
```

When expressions are used within vectors, anything other than constants, parameters, or unary expressions (unary +, unary -) must be surrounded by parentheses. Vector elements should be space separated for clarity, though this is not mandatory. The preceding "dc_sweep" example shows a vector of four elements, namely 0.5, 1, +p2, and sqrt(p2*p2).

Note: The square root expression is surrounded by parentheses.

© 2003-2020 All Rights Reserved.

The fastdc command line option (fastdc)

Description

The `fastdc` option speeds up the DC simulation in Spectre and APS for large-scale circuits and for cases where DC convergence is slow or there is difficulty in DC convergence.

The `fastdc` option provides a way to quickly obtain the approximate DC solution to start transient analysis.

Note: The DC solution obtained using the `fastdc` command-line option may not be as accurate as the true DC solution. The solution accuracy depends on the value specified for `fastdc`. The available values are 0, 1, 2, 3, and 4 (default).

0 - The most accurate DC result and closest to true DC solutions with the slowest performance. It should be used for the circuits that require accurate DC solution, such as analog circuits.

1 - The conservative DC result with slow performance. It should be used for the circuits that are sensitive to DC solution, such as analog dominated circuits.

2 - The reasonable DC result with moderate performance. It should be used for the circuits that are lightly sensitive to DC solution, such as mixed-signal circuits.

3 - The liberate DC results with fast performance. It should be used for the circuits that are less sensitive to DC solution, such as digital dominated circuits.

4 - The least accurate DC result with the fastest performance. It should be used for the circuits that are not sensitive to DC solution, such as digital and memory circuits.

Definition

Note: +fastdc (equal to +fastdc=4) or +fastdc=x (0, 1, 2, 3, 4) in the command line

© 2003-2020 All Rights Reserved.

Fault List for Transient Fault Analysis (faults)

Description

The faults block is used to specify the faults to be simulated during Transient Fault Analysis. It can contain the following types of faults: bridges (or equivalently shorts), opens, custom, and parametric.

The bridge (short) block specifies the resistance value between any two nodes of the circuit.

The node names are specified hierarchically. Local node names can be used when the `sub` or `dev` parameter is specified in faults block.

Optional `dev` parameter is used to specify device instance associated with the bridge.

The open block specifies the nodes that will be split into two.

Parameter `r` specifies resistance between the new fault node and the original node.

Optional parameter `c` specifies capacitance between the new fault node and the original node.

The last block describes topology change: how the instances connected to the original node will be connected to the new fault node. All terminals of the instances specified in the open statement will be connected to the new node. All terminals that are not specified will remain connected to the original node.

If no instance list is specified, a warning is issued and the fault is ignored. The terminals are specified by name or numerically starting from 1. If the specified terminal number 1 is the first terminal of the instance. If the specified terminal number of an instance in the instance list is not connected to the original node, an error is generated. If no terminal list is specified for an instance, all the terminals connected to the original node will remain connected to the original node. The node and instance names can be specified hierarchically.

The parametric block specifies alter statements for a single parameter. Device, subcircuit, model, or global parameters can be used in alter statement.

Within the faults block, the bridge, short, open, parametric, and custom blocks are optional. If none are specified, a warning is issued and the faults block is ignored. If more than one bridge, short, open, parametric, or custom block is specified within a faults block, they are concatenated and treated as one block. Every fault name in a faults block must be unique. Duplicate names result in an error.

© 2003-2020 All Rights Reserved.

More than one faults block may be specified in the netlist and each faults block must have a unique name and a set of parameters associated with it.

Fault grading can be performed by specifying `weight_factor` for each fault block, and `weight_expr` to apply weighting function for each fault in the block.

Optional weight parameter can be used to assign weight value for each fault.

Definition

Example

```
parameters resBridge=10 resOpen=1e9
faultlist1 faults {
    bridge {
        bridge_1 (g 0) r=resBridge
        bridge_2 (d s) r=10
    }
    open {
        open_1 (a) r=resOpen { M2:d M1:g }
    }
}
```


© 2003-2020 All Rights Reserved.

User Defined Functions (functions)

Description

Spectre's user-defined function capability allows you to build upon the provided set of built-in mathematical and trigonometric functions. You can write your own functions, and call these functions from within any expression. The syntax for calling a user-defined function is the same as the syntax for calling a built-in algebraic or trigonometric function. The user-defined functions must be defined before they are referenced (called). Arguments to user-defined functions are taken as real values, and the functions return real values. A user-defined function may contain only a single statement in braces, and this statement must return an expression (which is typically an expression involving the function arguments). The return expression may reference the built-in parameters `temp` and `tnom`. User-defined functions must be declared only at the top level, and must not be declared within subcircuits. User-defined functions may be called from anywhere an expression can be currently used in Spectre. User-defined functions may call other functions (both user-defined and built-in), however, any user-defined function needs to be declared before it can be called. User-defined functions can override built-in mathematical and trigonometric functions.

Note: Only real values for arguments and return values are supported in this release.

See `spectre -h expressions` for a list of built-in algebraic and trigonometric functions.

Definition

```
 real myfunc( [real arg1, ...real argn] ) {

}
```

Examples

```
real myfunc( real a, real b ) {
    return a+b*2+sqrt(a*sin(b));
}
```

An example of a function calling a previously defined function is as follows:

```
real yourfunc( real a, real b ) {
    return a+b*myfunc(a,b);     // call "myfunc"
}
```

The final example shows how a user-defined function may be called from an expression in the Spectre netlist:

```
r1 (1 0) resistor r=myfunc(2.0, 4.5)
```


© 2003-2020 All Rights Reserved.

Global Nodes (global)

Description

The global statement allows a set of nodes to be designated as common to the main circuit and all subcircuits. Thus, components inside subcircuits can be attached to global nodes, even though the subcircuit terminals are not attached to these nodes.

Any number of global nodes may be specified using the global statement. To do this, follow the keyword global with a list of the node names that you wish to declare as global. The first node name that appears in this list is taken to be the name of the ground node. Ground is also known as the datum or reference node. If a global statement is not used, 0 is taken to be the name of the ground node.

Ground is always treated as global even if a global statement is not used. Multiple global statements are supported.

Definition

```
global <ground> <node> ...
```


© 2003-2020 All Rights Reserved.

IBIS Component Use Model (ibis)

Description

IBIS (I/O Buffer Information Specification) is a standard for electronic behavioral specification of integrated circuit (IC) input/output analog characteristics. It allows you to define a model for the IC component package, and a buffer model for each pin. IBIS standard also allows you to describe a board-level component containing several components on a common substrate or printed circuit board (PCB). For example, a `SIMM` module is a board-level component that is used to attach several DRAM components on the PCB to a motherboard through edge connector pins. Board pins, components on the board, and connections between them are defined in an Electrical Board Description file with extension `.ebd`. Component pins, buffers, and package descriptions are in a separate IBIS file with extension `.ibs`. An Additional Package file with extension `.pkg` can be used to describe advanced package models.

Spectre supports IBIS 6.0 and previous versions. Some keywords are not supported.

IBIS files can be referenced in Spectre netlist by using the `ibis_include` statement:

```
ibis_include "DRAM.ibs" [options]
```

IBIS file "DRAM.ibs" is translated into Spectre netlist format by using `ibis2subckt` utility. The output file, "DRAM.scs", containing subcircuit definitions for each IBIS component, board, and package found in the input IBIS file, is included in the netlist. The list of options may consist of: `corner={typ|min|max|slow|fast}`, `swsel=<int>` and `mdsel=<int>`. These options are transferred to `ibis2subckt`. They are used to select IBIS buffer model corner, change position of series-switch models, and choose the required models from model selector list.

IBIS component and board subcircuits can be instantiated in a Spectre netlist along with regular Spectre primitives. Subcircuit name is the same as the component name, but is appended with the suffix_`ibis`. Subcircuit terminals are component pins, arranged in the order they are listed in the IBIS file. Each pin terminal is followed by a number of signal terminals, depending on the type of the pin buffer model. For example, if m1 is defined in IBIS file as an input buffer model, and m2 - as I/O type, the following IBIS component:

```
[Component] IC
[Pin]  signal_name   model_name   R_pin     L_pin     C_pin
p1      s1            GND
p3      s3            m1
p4      s4            NC
p5      s5            m2
p2      s2            POWER
```


© 2003-2020 All Rights Reserved.

can be instantiated in the netlist as:

```
x_ic ( p1 p3 s3_in p4 p5 s5_in s5_out s5_en p2 ) IC_ibis
```

`ibis2subckt` can also be used as a stand-alone utility with the following command-line arguments:

```
ibis2subckt  -in <IBIS files> -out <subckt file> -corner {typ|min|max|slow|fast} -
swsel <int> -mdsel <int>
```

Default values are:

```
corner  typ
mdsel   -1
swsel   -1
```

SPICE NETLIST SUPPORT

For the IBIS component, Spectre also supports the `SPICE .IBIS` and `.EBD` statements.

The supported parameters of `.IBIS` syntax are `file`, `component`, `mod_sel`, `package`, and `typ`.

© 2003-2020 All Rights Reserved.

.IBIS Parameters

`file = <string>`	Specifies the IBIS file name with suffix `.ibs`.
`component = <string>`	Specifies the used component name in the `.ibs` file.
`mod_sel = <string1=string2>`	Maps the model selector name (string1) to the actual model name (string2), given as [Model selector] in the `.ibis` file. Multiple selectors are supported.
`package = <3|0|1|2>`	Specifies the type of package. Default value is 3 (use the best available package model). `package=0` means no package is used. `package=1` means that an RLC package is used with the same values for all pins provided in the `[Package]` section. `package=2` means that an RLC package is used with individual RLC values for each pin provided in the `[Pin]` section. package=3 means that an advanced package model is used in the `[Package Model]` section.
`typ = <typ|min|max|fast|slow>`	Specifies the corner of the IBIS buffer. Default value is `typ` (typical).

The supported parameters of the `.EBD` syntax are `file`, `model`, and `component`.

.EBD Parameters

`file = <string>`	Specifies the EBD file name with the suffix `.ebd`
`model = <string>`	Specifies name of the board-level model provided in `.ebd` file
`component = <string>`	Specifies the component name of the ibis buffer. Multiple components are supported.

Examples

```
.ibis I1
+ file = file.ibs
+ component = Component
+ mod_sel = DQ=DQ1,CQ=CQ1
+ package=0
```


© 2003-2020 All Rights Reserved.

```
+ typ=slow

.ebd pkg
+ file = file.ebd
+ model = XXXX
+ component = Component1
+ component = Component2
```

Supported IBIS Keywords in Spectre

Note: The supported keywords list below is based on IBIS version 6.0.

The following shows the sections and keywords in the IBIS file that are supported in Spectre:

```
.ibis FILE
    FILE Header Section
        [IBIS Ver]
        [Comment Char]
        [File Name]
        [File Rev]
        [Date]
        [Source]
        [Notes]
        [Disclaimer]
        [Copyright]
    [Component]                 Si Location, Timing_location
        [Manufacturer]
        [Package]               R_pkg, L_pkg, C_pkg
        [Pin]                   signal_name, model_name, R_pin, L_pin, C_pin
        [Package Model]
        [Pin Mapping]           pulldown_ref, pullup_ref, gnd_clamp_ref,
                                power_clamp_ref, ext_ref
        [Diff Pin]              inv_pin, vdiff, tdelay_typ, tdelay_min, tdelay_max
        [Series Pin Mapping]    pin_2, model_name, function_table_group
        [Series Switch Groups]  On (m), Off (m)
    [Model Selector]
        [Model]                 Model_type, Polarity, Enable, Vinl, Vinh, C_comp,
                                C_comp_pullup, C_comp_pulldown,
                                C_comp_power_clamp, C_comp_gnd_clamp, Vmeas,
                                Cref, Rref, Vref
            [Model Spec]        Vinh, Vin1
            [Add Submodel]
            [Driver Schedule]
            [Temperature Range]
```


© 2003-2020 All Rights Reserved.

```
    [Voltage Range]
    [Pullup Reference]
    [Pulldown Reference]
    [Power Clamp Reference]
    [GND Clamp Reference]
    [C Comp Corner]              C_comp, C_comp_pullup, C_comp_pulldown,
                                 C_comp_power_clamp, C_comp_gnd_clamp
    [Pulldown]
    [Pullup]
    [GND Clamp]
    [POWER Clamp]
    [ISSO PU]
    [ISSO PD]
    [Rgnd]
    [Rpower]
    [Rac]
    [Cac]
    [On]
    [Off]
    [R Series]
    [L Series]
    [R1 Series]
    [C Series]
    [LC Series]
    [RC Series]
    [Series Current]
    [Series MOSFET]          Vds
    [Ramp]                   dV/dt_r, dV/dt_f, R_load
    [Rising Waveform]        R_fixture, V_fixture, V_fixture_min,
                             V_fixture_max, C_fixture, L_fixture,
        [Composite Current]
    [Falling Waveform]       _fixture, V_fixture, V_fixture_min,
                             V_fixture_max, C_fixture, L_fixture,
        [Composite Current]
    [External Model]         Language, Corner, Parameters, Ports, D_to_A,
                             A_to_D
        [End External Model]
[Sub Model]                  Sub model type
    [Sub Model Spec]         V_trigger_r, V_trigger_f
    [POWER Pulse Table]
    [GND Pulse Table]
    [Pulldown]
```


© 2003-2020 All Rights Reserved.

```
        [Pullup]
        [GND Clamp]
        [POWER Clamp]
        [Ramp]                      dV/dt_r, dV/dt_f, R_load
        [Rising Waveform]          R_fixture, V_fixture, V_fixture_min,
                                   V_fixture_max, C_fixture, L_fixture,
        [Falling Waveform]          R_fixture, V_fixture, V_fixture_min,
                                   V_fixture_max, C_fixture, L_fixture,
    [Define Package Model]
        [Manufacturer]
        [OEM]
        [Description]
        [Number of Sections]
        [Number of Pins]
        [Pin Numbers]               Len, L, R, C, Fork, Endfork
        [Model Data]
            [Resistance Matrix]    Banded_matrix, Sparse_matrix, Full_matrix
                [Bandwidth]
                [Row]
            [Inductance Matrix]    Banded_matrix, Sparse_matrix, Full_matrix
                [Bandwidth]
                [Row]
            [Capacitance Matrix]    Banded_matrix, Sparse_matrix, Full_matrix
                [Bandwidth]
                [Row]
            [End Model Data]
        [End Package Model’
    [END]
```

The following shows the sections and keywords in the package file that are supported in Spectre:

```
.pkg FILE
    FILE Header Section
        [IBIS Ver]
        [Comment Char]
        [File Name]
        [File Rev]
        [Date]
        [Source]
        [Notes]
        [Disclaimer]
        [Copyright]
```


© 2003-2020 All Rights Reserved.

```
    [Define Package Model]
        [Manufacturer]
        [OEM]
        [Description]
        [Number of Sections]
           Number of Pins]
        [Pin Numbers]             Len, L, R, C, Fork, Endfork
        [Model Data]
            [Resistance Matrix]   Banded_matrix, Sparse_matrix, Full_matrix
                [Bandwidth]
                [Row]
            [Inductance Matrix]   Banded_matrix, Sparse_matrix, Full_matrix
                [Bandwidth]
                [Row]
            [Capacitance Matrix]   Banded_matrix, Sparse_matrix, Full_matrix
                [Bandwidth]
                [Row]
            [End Model Data]
        [End Package Model’
        [END]
```

The following shows the sections and keywords in the EBD file that are supported in Spectre:

```
.pkg FILE
    FILE Header Section
        [IBIS Ver]
        [Comment Char]
        [File Name]
        [File Rev]
        [Date]
        [Source]
        [Notes]
        [Disclaimer]
        [Copyright]
    [Begin Board Description]
        [Manufacturer]
        [Number of Pins]
        [Pin List]                 signal_name
        [Path Description]         Len, L, R, C, Fork, Endfork, Pin, Node
        [Reference Designator Map]
        [End Board Description]
    [END]
```


© 2003-2020 All Rights Reserved.

Initial Conditions (ic)

Description

The `ic` statement is used to provide initial conditions for nodes in transient analysis. It can occur multiple times in the input, and the information provided in all the occurrences is collected. Initial conditions are accepted only for inductor currents and node voltages where the nodes have a path of capacitors to ground. For more information, read the description of transient analysis.

Note: Specifying `cmin` for a transient analysis, does not satisfy the condition that a node has a capacitive path to ground.

Definition

```
ic <X[:param]=value> ...
```

This statement takes a list of signals with the state information to the DC and transient analyses. `X` can be a node, a component, or a subcircuit and `param` can either be a component output parameter or a terminal index. To specify a class of signals, use the pattern matching characters `*` for any string and `?` for any character.

The concept of nodes for the statement has been generalized to signals where a signal is a value associated with a topological node of the circuit or some other unknown that is solved by the simulator, such as the current through an inductor or the voltage of the internal node in a diode. Topological nodes can either be at the top-level or in a subcircuit.

For example:

```
ic 7=0 out=1 OpAmp1.comp=5 L1:1=1.0u
```

where, `7=0` implies that node `7` should start at 0V, node `out` should start at 1V, node `comp` in subcircuit `OpAmp1` should start at 5V, and the current through the first terminal of `L1` should start at 1uA.

For more information, refer to *The ic and nodeset Statements* in the *Spectre Classic Simulator, Spectre APS, Spectre X, and Spectre XPS User Guide.*

© 2003-2020 All Rights Reserved.

The Structural if-statement (if)

Description

The structural if-statement can be used to conditionally instantiate other instance statements.

Definition

```
if <condition> <statement1> [ else <statement2> ]
```

The condition is a Boolean expression based on the comparisons of various arithmetic expressions that are evaluated during circuit hierarchy flattening. The statement1 and statement2 fields can be ordinary instance statements, if-statements, or a list of these within braces ({}). The ordinary instance statements need a newline to terminate them. The `else` part is optional. When if-statements are nested without braces, an `else` matches the closest previous unmatched `if` at the same level.

It is possible to have duplicate instance names within the if statement under strict topological conditions. These conditions are as follows:

- References to an instance with duplicate names is possible only within a structural if statement that has both an "if" part and an "else" part.
- Both the "if" part and the "else" part must be a simple one-statement block, or another structural if statement to which these same rules apply.
- The duplicate instances must have the same number of terminals and be bound to the same list of nodes.
- The duplicate instances must refer to the same primitive or model.
- Where duplicate instances refer to a model, the underlying primitive must be the same.

This feature allows automatic model selection based on any netlist or subcircuit parameter. As an example, consider using Spectre's inline subcircuits and structural if statement to implement automatic model selection based on bipolar device area. Here, the duplicate instances are the inline components.

```
model npn_default bjt is=3.2e-16 va=59.8
model npn10x10 bjt is=3.5e-16 va=61.5
model npn20x20 bjt is=3.77e-16 va=60.5
// npn_mod chooses scaled models binned on area!
// if ( area < 100e-12 ) use model npn10x10
// else if ( area <  400e-12 ) use model npn20x20
// else use model npn_default
```


© 2003-2020 All Rights Reserved.

```
inline subckt npn_mod (c b e s)
  parameters area=5e-12
  if ( area < 100e-12 ) {
      npn_mod (c b e s) npn10x10  // 10u * 10u, inline device
  } else if ( area < 400e-12 ) {
      npn_mod (c b e s) npn20x20  // 20u * 20u, inline device
  } else {
      npn_mod (c b e s) npn_default       // 5u * 5u, inline device
  }
ends npn_mod
q1 (1 2 0 0) npn_mod area=350e-12         // gets 20x20 model
q2 (1 3 0 0) npn_mod area=25e-12          // gets 10x10 model
q3 (1 3 0 0) npn_mod area=1000e-12        // gets default model
```

For additional information, refer to the *Conditional Instances* section in the *Spectre Classic Simulator, Spectre APS, Spectre X, and Spectre XPS User Guide*.

© 2003-2020 All Rights Reserved.

Include File (include)

Description

File inclusion allows the circuit description to be spread over several files. The include statement itself is replaced by the contents of the file named. An included file may also contain include statements. If the name given is not an absolute path specification, the path is taken relative to the directory of the file currently being read.

To read existing SPICE library and model files, Spectre automatically switches to SPICE input mode when it opens an include file. Thus, all files that use the Spectre native language must begin with a `simulator lang=spectre` statement. The one exception is files that end with a "`.scs`" file extension, which are treated specially and are read in Spectre input mode. This language mode treatment applies to files included by both the Spectre `include` statement, and the CPP `#include` statement.

After reading the include file, Spectre restores the language processing mode to what it was before the file was included, and continues reading the original file starting at the line after the include statement. Lines cannot be continued across file boundaries.

The CPP `#include` statement differs from Spectre `include` statement in that the CPP macro processing is not performed on files included by Spectre, but is performed on files included by CPP. If your netlist contains a `#include` statement, you must run CPP to perform this inclusion; otherwise, an error occurs.

If the file to be included cannot be found in the same directory as the including file, both the Spectre `include` and CPP `#include` search for the file to be included along the search path specified by the `-I` command-line arguments.

The Spectre `include` statement allows you to include a library section. The following is the syntax for specifying a library reference:

```
include "file" section=sectionName
```

where, `file` is the name of the library file to be included, and `sectionName` matches the name of the section defined in the library. The library reference statement looks like an `include` statement, except for the specification of the library section. When the file is being inserted, only the named section is actually included.

The Spectre `include` statement allows you to embed special characters in the name of the file to be included. The Spectre `include` statement automatically expands the ~ character to the user's home directory,will expand the environment variables and % codes, such as

```
include "~/models/${SIMULATOR}_pd/npn.scs"
```


© 2003-2020 All Rights Reserved.

which looks in the directory given by the environment variable `SIMULATOR`, followed by `_pd`, which is under the `models` directory in the user's home directory.

Note: These special character features are not available with the CPP `#include` statement.

For additional information, see *Input Data from Multiple Files* in the *Spectre Classic Simulator, Spectre APS, Spectre X, and Spectre XPS User Guide*.

Definition

```
include "filename"
```


© 2003-2020 All Rights Reserved.

Spectre Netlist Keywords (keywords)

Description

The following are Spectre keywords, including netlist keywords and built-in mathematical and physical constants. Spectre has special use for these keywords, and they are reserved in certain contexts. You should follow the rules given below when using them to prevent errors.

- Netlists keywords cannot be used as instance names, subckt names, model names, or function names.
- Built-in mathematical and physical constants cannot be used as node names, instance names, subckt names, model names, function names, or parameter names.

Keyword	Keyword Type
M_1_PI	Mathematical Constant
M_2_PI	Mathematical Constant
M_2_SQRTPI	Mathematical Constant
M_DEGPERRAD	Mathematical Constant
M_E	Mathematical Constant
M_LN10	Mathematical Constant
M_LN2	Mathematical Constant
M_LOG10E	Mathematical Constant
M_LOG2E	Mathematical Constant
M_PI	Mathematical Constant
M_PI_2	Mathematical Constant
M_PI_4	Mathematical Constant
M_SQRT1_2	Mathematical Constant
M_SQRT2	Mathematical Constant
M_TWO_PI	Mathematical Constant
P_C	Mathematical Constant
P_CELSIUS0	Mathematical Constant
P_EPS0	Mathematical Constant

© 2003-2020 All Rights Reserved.

P_H	Mathematical Constant
P_K	Mathematical Constant
P_Q	Mathematical Constant
P_U0	Mathematical Constant
altergroup	Netlist Keyword
correlate	Netlist Keyword
else	Netlist Keyword
end	Netlist Keyword
ends	Netlist Keyword
export	Netlist Keyword
for	Netlist Keyword
freq	Netlist Reserved Word
function	Netlist Keyword
global	Netlist Keyword
ic	Netlist Keyword
if	Netlist Keyword
in	Netlist Keyword
inline	Netlist Keyword
input	Netlist Keyword
invisible	Netlist Keyword
library	Netlist Keyword
local	Netlist Keyword
march	Netlist Keyword
model	Netlist Keyword
nodeset	Netlist Keyword
out	Netlist Keyword
output	Netlist Keyword
parameters	Netlist Keyword
paramset	Netlist Keyword

© 2003-2020 All Rights Reserved.

`plot`	Netlist Keyword
`print`	Netlist Keyword
`protect`	Netlist Keyword (The first four letters of the keyword (in lowercase or uppercase) can be used as an abbreviation. For example, prot and PROT are valid keywords).
`pwr`	Netlist Keyword
`real`	Netlist Keyword
`return`	Netlist Keyword
`save`	Netlist Keyword
`scalem`	Netlist Reserved Word
`sens`	Netlist Keyword
`statistics`	Netlist Keyword
`subckt`	Netlist Keyword
`temp`	Netlist Reserved Word
`temper`	Netlist Reserved word
`time`	Netlist Reserved Word
`tnom`	Netlist Reserved Word
`to`	Netlist Keyword
`truncate`	Netlist Keyword
`unprotect`	Netlist Keyword. (The first six letters of the keyword (in lowercase or uppercase) can be used as an abbreviation. For example, unprot and UNPROT are valid keywords).
`vary`	Netlist Keyword
`visible`	Netlist Keyword

© 2003-2020 All Rights Reserved.

Library - Sectional Include (library)

Description

Library inclusion allows the circuit description to be spread over several files. The library statement itself is replaced by the contents of the specified section of the library file. A library section may also contain library reference statements. If the file name given is not an absolute path specification, the path is taken relative to the directory of the file currently being read.

There are two types of library statements. One that references a library section, and another that defines a library section. The definition of a library section is prohibited in the netlist.

In order to read existing SPICE library and model files, Spectre automatically switches to SPICE input mode when it opens a library file. Thus, all files that use the Spectre native language must contain a `simulator lang=spectre` statement within each section of the library or the file can have a `.scs` filename extension. After reading the library section, Spectre restores the language processing mode and continues reading the original file starting at the line after the library statement. Lines cannot be continued across file boundaries.

Spectre allows only one library per file, but a library may contain multiple sections (typically, one section per process corner).

Definition

```
Inside netlist (reference library section)
```

Sample Library

```
library corner_lib
section tt
   model nch bsim3v3 type=n mobmod=1 capmod=2 version=3.1
   + xj=1.7e-7 vsat=7.99e4 at=3.6e4 a0=0.799 ags=0.4
   + a1=0 a2=1 keta=-0.05 nch=2.8e17 ngate=1.31e20 k1=0.74
   model pch bsim3v3 type=p mobmod=1 capmod=2 version=3.1
   + xj=1.7e-7 vsat=1.38e5 at=1e5 a0=1.3 ags=0.3
   + a1=1.1e-4 a2=1 keta=0 nch=4.1e17 ngate=7.6e19 k1=0.88
   model knpn bjt is=10e-13 bf=170 va=58.7 ik=5.63e-3 rb=rbn rbm=86
   + re=3.2 cje=0.25e-12 pe=0.76 me=0.34 tf=249e-12 cjc=0.34e-12 pc=0.55
   + mc=0.35 ccs=2.4e-12 ms=0.35 ps=0.53 rc=169
   model kpnp bjt type=pnp is=10e-13 bf=60 va=43.1 ik=0.206e-3 rb=rbp rbm=64.3
   + re=33.8 cje=0.16e-12 pe=0.5 me=0.26 tf=36e-9 cjc=0.72e-12 pc=0.58
   + mc=0.34 ccs=2.5e-12 ps=0.53 ms=0.35 rc=276
```


© 2003-2020 All Rights Reserved.

```
endsection
section ss
   model nch bsim3v3 type=n mobmod=1 capmod=2 version=3.1
   + xj=1.7e-7 vsat=7.99e4 at=3.6e4 a0=0.799 ags=0.4
   + a1=0 a2=1 keta=-0.05 nch=2.8e17 ngate=1.31e20 k1=0.74
   model pch bsim3v3 type=p mobmod=1 capmod=2 version=3.1
   + xj=1.7e-7 vsat=1.38e5 at=1e5 a0=1.3 ags=0.3
   + a1=1.1e-4 a2=1 keta=0 nch=4.1e17 ngate=7.6e19 k1=0.88
   model knpn bjt is=10e-13 bf=70 va=58.7 ik=5.63e-3 rb=rbn rbm=86
   + re=3.2 cje=0.25e-12 pe=0.76 me=0.34 tf=249e-12 cjc=0.34e-12 pc=0.55
   + mc=0.35 ccs=2.4e-12 ms=0.35 ps=0.53 rc=169
   model kpnp bjt type=pnp is=10e-13 bf=30 va=43.1 ik=0.206e-3 rb=rbp rbm=64.3
   + re=33.8 cje=0.16e-12 pe=0.5 me=0.26 tf=36e-9 cjc=0.72e-12 pc=0.58
   + mc=0.34 ccs=2.5e-12 ps=0.53 ms=0.35 rc=276
endsection
section ff
   model nch bsim3v3 type=n mobmod=1 capmod=2 version=3.1
   + xj=1.7e-7 vsat=7.99e4 at=3.6e4 a0=0.799 ags=0.4
   + a1=0 a2=1 keta=-0.05 nch=2.8e17 ngate=1.31e20 k1=0.74
   model pch bsim3v3 type=p mobmod=1 capmod=2 version=3.1
   + xj=1.7e-7 vsat=1.38e5 at=1e5 a0=1.3 ags=0.3
   + a1=1.1e-4 a2=1 keta=0 nch=4.1e17 ngate=7.6e19 k1=0.88
   model knpn bjt is=10e-13 bf=220 va=58.7 ik=5.63e-3 rb=rbn rbm=86
   + re=3.2 cje=0.25e-12 pe=0.76 me=0.34 tf=249e-12 cjc=0.34e-12 pc=0.55
   + mc=0.35 ccs=2.4e-12 ms=0.35 ps=0.53 rc=169
   model kpnp bjt type=pnp is=10e-13 bf=90 va=43.1 ik=0.206e-3 rb=rbp rbm=64.3
   + re=33.8 cje=0.16e-12 pe=0.5 me=0.26 tf=36e-9 cjc=0.72e-12 pc=0.58
   + mc=0.34 ccs=2.5e-12 ps=0.53 ms=0.35 rc=276
endsection
endlibrary
```


© 2003-2020 All Rights Reserved.

Tips for Reducing Memory Usage (memory)

Description

If you are facing an insufficient memory problem, try the following suggestions:

1. Try using a 64-bit executable if you are using the 32-bit one.

2. Try `ulimit`/`unlimit` command to adjust memory limitations.

3. Try another machine that has more memory, if hardware limit is the cause

4. Refer to `spectre -h rfmemory`, if you faced the problem during RF analyses.

© 2003-2020 All Rights Reserved.

Multi-Technology Simulation Mode (mts)

Description

Multi-Technology Simulation (MTS) mode enables the simulation of a system consisting of blocks designed with different processes. Under this mode, models and modelgroups referenced using include or `ahdl_include` statements in a subcircuit are locally scoped to that subcircuit only. In addition, process options parameters (`temp`, `tnom`, `scale`, and `scalem`), when specified in a subcircuit, are locally scoped to that subcircuit only.

MTS mode is enabled by default across all Spectre simulators. To turn the MTS mode off, use the `-mts` command-line option.

Here is an example of a system consisting of blocks designed with different processes:

```
subckt chip1 ( in out )
    scopedOptions options tnom=27 scale=0.1
    .......
ends chip1
subckt chip2 ( in out )
    scopedOptions options tnom=25 scale=0.2
    ......
ends chip2
```

In the log file, you will see the following user options:

```
Scoped user options:
    tnom = 27    subckt=chip1
    scale = 0.1   subckt=chip1
    tnom = 25   subckt=chip2
    scale = 0.2   subckt=chip2
```


© 2003-2020 All Rights Reserved.

Node Sets (nodeset)

Description

The `nodeset` statement is used to provide an initial guess for nodes in DC analysis or to provide the initial condition calculation for transient analysis. The `nodeset` statement can occur multiple times in the input and the information provided in all the occurrences is collected. For more information, read the description of DC analysis.

Definition

```
nodeset <X>[:param]=value
```

This statement takes a list of signals with the state information to the DC and transient analyses. `X` can be a node, a component, or a subcircuit, and `param` can be either a component output parameter or a terminal index. To specify a class of signals, use the pattern matching character `*` for any string and `?` for any character.

The concept of nodes for the statement has been generalized to signals, where a signal is a value associated with a topological node of the circuit or some other unknown that is solved by the simulator, such as the current through an inductor or the voltage of the internal node in a diode. Topological nodes can be either at the top-level or in a subcircuit.

For example:

```
nodeset 7=0 out=1 OpAmp1.comp=5 L1:1=1.0u
```

where, 7=0 implies that node `7` should be about 0V, node `out` should be about 1V, node `comp` in subcircuit `OpAmp1` should be about 5V, and the current through the first terminal of `L1` should be about 1uA.

For more information, refer to *The ic and nodeset Statements* in the *Spectre Classic Simulator, Spectre APS, Spectre X, and Spectre XPS User Guide*.

© 2003-2020 All Rights Reserved.

Parameter Soft Limits (param_limits)

Description

The parameter values passed to Spectre components and analysis are subject to both hard and soft limits. If you set a parameter to a value that violates a hard limit, such as giving z0=0 to a transmission line, Spectre issues an error message and quits. If the given parameter value violates a soft limit, a warning is issued, but Spectre uses the value of the component as given. Hard limits are used to prevent you from using values that would cause Spectre to fail or put a model in an invalid region. Soft limits are used to call attention to unusual parameter values that might have been given mistakenly. If a parameter value violates a soft limit, a message similar to one of the following sample messages is printed:

```
Parameter rb has the unusually small value of 1uOhms.
```

or

```
Parameter rb has the unusually large value of 1MOhms.
```

Spectre has built-in soft limits on a few parameter values. However, it is possible for you to override these limits or to provide limits on parameters that do not have built-in limits. To do so, create a parameter range limits file and run Spectre by providing the name of the file after the `+param` command-line option. For example:

```
spectre +param limits-file input-file
```

Limits are specified using the following syntax:

```
[PrimitiveName] [model] [LowerLimit <[=]] [|]Param[|] [<[=] UpperLimit]
```

The limits can be given as strict (using <=) or nonstrict (using <). If the limits are strict, there can be no space between < and =. The limits for one parameter are given on one line. There is no way of continuing the specification of the limits for a parameter over more than one line. If a parameter is specified more than once, the limits specified at last override the earlier limits. The primitive name must be a Spectre primitive name, and not a name used for SPICE compatibility. For example, `mos3` must be used instead of `mos`. Parameter limits can be written using Spectre native mode metric scale factors. Therefore, a limit of `f <= 1.0e6` can also be written as `f <= 1M`.

Examples

```
mos3       0.5u <= l <= 100u
    0.5u <= w
    0 < as <= 1e-8
    0 < ad <= 1e-8
model |vto| <= 3
```


© 2003-2020 All Rights Reserved.

It is not necessary to specify the primitive name each time. If the primitive name is not specified, it is assumed to be the same as the previous parameter. Upper and lower limits may be specified, but if these are not specified, there is no limit on the parameter value. Therefore, in the example, if w is less than 0.5um, a warning is issued, but there is no limit on how large `w` can be. If a parameter is mentioned, but no limits are given, all limits are disabled for that parameter. Limits are placed on model parameters by giving the model keyword. If the model keyword is not given, the limits are applied to instance parameters. Notice that you can also place upper or lower limits on the absolute value of a parameter. For example:

```
resistor 0.1 < |r| < 1M
```

indicates that the absolute value of r should be greater than 0.1 Ohm and less than 1 MOhm. There can be no spaces between the absolute value symbols and the parameter name.

Examples

```
1 <= x < 0.5
1 <= y <= 1
1 < z < 1
```

In the first case, the lower bound is larger than the upper bound, which indicates that the range of x is all real numbers, except those from 0.5 to 1, including 0.5. The limits are applied separately, therefore, x must be both greater than or equal to 1 (1 <= x) and less than 0.5 (x < 0.5). The second case specifies that y should be 1, and the third case specifies that z should not be 1.

It is possible to specify limits for any scalar parameter that takes a real number, an integer, or an enumeration. To specify the limits of a parameter that takes enumerations, use the indexes associated with the enumerations. For example, consider the region parameter of the bjt. There are four possible regions: `off`, `fwd`, `rev`, and `sat` (see `spectre -help bjt`). Each enumeration is assigned a number starting at 0 and counting up. Therefore, `off=0`, `fwd=1`, `rev=2`, and `sat=3`. The specification `bjt 3 <= region <= 1` indicates that a warning should be printed if region=rev because the conditions (`3 <= region`) and (`region <= 1`) exclude only (`region=2`) and region 2 is rev.

It is possible to read a parameter limits file from within another file. To do so, use an include statement. For example,

```
include "filename"
```

temporarily suspends the reading of the current file until the contents of `filename` have been read. Include statements may be nested arbitrarily deep with the condition that the operating system may limit the number of files that Spectre may have open at once. Paths in file names are taken to be relative to the directory that contains the current file, and not from the directory from which Spectre was run.

© 2003-2020 All Rights Reserved.

Spectre can be instructed to always read a parameter limits file by using the SPECTRE_DEFAULTS environment variable. For example, if you put the following in you shell initialization file (`.profile` for sh, `.cshrc` for csh)

```
setenv SPECTRE_DEFAULTS "+param /cds/etc/spectre/param.lmts"
```

Spectre always reads the specified limits file.

For more information, see *Selecting Limits for Parameter Value Warning Messages* in the *Spectre Classic Simulator, Spectre APS, Spectre X, and Spectre XPS User Guide.*

© 2003-2020 All Rights Reserved.

Netlist Parameters (parameters)

Description

The Spectre native netlist language allows parameters to be specified and referenced in the netlist, both at the top-level scope and within subcircuit declarations (run `spectre -h subckt` for more details on parameters within subcircuits).

Definition

```
parameters <param=value> [param=value]...
```

Examples:

```
simulator lang=spectre
parameters p1=1 p2=2            // declare some parameters
r1 (1 0) resistor r=p1          // use a parameter, value=1
r2 (1 0) resistor r=p1+p2       // use parameters in an expression, value=3
x1 s1 p4=8      // "s1" is defined below, pass in value 8 for "p4"
subckt s1
parameters p1=4 p3=5 p4=6       // note: no "p2" here, p1 "redefined"
r1 (1 0) resistor r=p1          // local definition used: value=4
r2 (1 0) resistor r=p2          // inherit from parent(top-level) value=2
r3 (1 0) resistor r=p3          // use local definition, value=5
r4 (1 0) resistor r=p4          // use passed-in value, value=8
r5 (1 0) resistor r=p1+p2/p3    // use local+inherited/local = (4+2/5) = 4.4
ends
time_sweep tran start=0 stop=(p1+p2)*50e-6 // use 5*50e-6 = 150 us
dc_sweep dc param=p1 values=[0.5 1 +p2 (sqrt(p2*p2)) ]  // sweep p1
```

Parameter Declaration

Parameters can be declared anywhere in the top-level circuit description or on the first line of a subcircuit definition. Multiple parameters can be declared on a single line. When parameters are declared in the top-level, their values must be specified. When parameters are declared within subcircuits, their default values are optionally specified.

Parameter Inheritance

Subcircuit definitions inherit parameters from their parent (enclosing subcircuit definition or top-level definition). This inheritance continues across all levels of nesting of subcircuit

© 2003-2020 All Rights Reserved.

definitions, that is, if a subcircuit s1 is defined, which itself contains a nested subcircuit definition s2, then any parameters accessible within the scope of s1 are also accessible from within s2. In addition, any parameters declared within the top-level circuit description are also accessible within both s1 and s2. However, any subcircuit definition can redefine a parameter that it has inherited. In this case, if no value is specified for the redefined parameter when the subcircuit is instantiated, the redefined parameter uses the locally defined default value, rather than inheriting the actual parameter value from the parent.

Parameter Referencing

Spectre netlist parameters can be referenced anywhere. A numeric value is normally specified on the right-hand side of an "=" sign or within a vector, where the vector itself is on the right-hand side of an "=" sign. This includes referencing of parameters in expressions (run `spectre -h expressions` for more details on netlist expression handling), as indicated in the preceding examples. You can use expressions containing parameter references when specifying device or analysis instance parameter values (for example, specifying the resistance of a resistor or the stop time of a transient analysis, as outlined in the preceding example), when specifying model parameter values in model cards (for example, specifying `bf=p1*0.8` for a bipolar model parameter `bf`), or when specifying initial conditions and nodesets for individual circuit nodes.

Altering/Sweeping Parameters

Just as certain Spectre analyses (for example, `sweep`, `alter`, `ac`, `dc`, `noise`, `sp`, `xf`) can sweep device instance or model parameters, they can also sweep netlist parameters. Run `spectre -h <analysis>` to view the details for any of these analyses, where `<analysis>` is the analysis of interest.

Temperature as a Parameter

You can use the reserved parameters `temp` and `tnom` anywhere an expression can be used, including within expressions and user-defined functions. The `temp` parameter always represents the simulator (circuit) temperature, and `tnom` always represents the measurement temperature. All expressions involving `temp` or `tnom` are re-evaluated everytime the circuit temperature or measurement temperature changes.

You can also alter or sweep the `temp` and `tnom` parameters by using any of the techniques available for altering or sweeping the netlist or subcircuit parameters (with the exception of s).

This capability allows you to write temperature dependent models, for example, by using `temp` in an equation for a model or an instance parameter. For example:

```
r1 1 0 res r=(temp-tnom)*15+10k // temp is temperature
```


© 2003-2020 All Rights Reserved.

```
o1 options temp=55      // causes a change in above resistor r1
```

Reserved Parameters

The following parameters are reserved and must not be declared as either top-level parameters or subcircuit parameters: `temp`, `tnom`, `scale`, `scalem`, `freq`, `time`.

For additional information, refer to the *Parameters Statement* section in the *Spectre Classic Simulator, Spectre APS, Spectre X, and Spectre XPS User Guide*.

© 2003-2020 All Rights Reserved.

Parameter Set - Block of Data (paramset)

Description

A parameter set is a block of data, which can be referenced by a sweep analysis. Within a paramset, the first row contains an array of top-level netlist parameters. All other rows contain numbers that are used to alter the value of the parameters during the sweep. Each row represents an iteration of the sweep. This data should be bound within braces. The opening brace is required at the end of the line defining the paramset. The paramset cannot be defined within subcircuits or cannot be nested.

Definition

```
<Name> paramset {
}
```

Example:

```
data paramset {
   p1  p2  p3
   1.1 2.2 3.3
   4.4 5.5 6.6
}
```


© 2003-2020 All Rights Reserved.

The postlayout command line option (postlayout)

Description

This option enables various technologies to speed up post-layout simulation including RC reduction, efficient coupling capacitor handling, advanced DC algorithms optimized for large post-layout circuits, along with other advanced numerical techniques.

The `+postlayout` option delivers best simulation performance, with acceptable accuracy, for custom digital designs, memory designs, and analog/mixed-signal designs where high simulation precision is not required.

`+postlayout=hpa` provides higher simulation precision for analog /mixed-signal designs.

`+postlayout=upa` delivers the ultimate post-layout simulation accuracy, similar to `+postlayout=hpa`, but with RC reduction completely disabled.

Even though not recommended, `+rcnet_fmax=N` command-line option can be used to adjust the simulation accuracy associated with `+postlayout`. The unit for `N` is in GHz and the default value is `125`. `N=25` is considered aggressive, whereas `N=250` is considered conservative. The `+rcnet_fmax` option not only controls RC reduction accuracy with any local RC net, but also defines the accuracy/performance trade-off of other non-reduction based techniques. `rcnet_fmax` is available as a Spectre command-line argument or option.

`+postlayout=legacy/legacy_rf` options provide backward compatibility with the `+parasitics/+parasitics=rf` options respectively. Accuracy of the `+postlayout=legacy` option can also be adjusted using the `rcr_fmax` option.

Definition

```
+postlayout in the command line
```


© 2003-2020 All Rights Reserved.

Pspice_include File (pspice_include)

Description

Spectre supports PSPICE netlist format targeting to include PCB components that are modeled in PSPICE format. This solution does not support PSPICE designs. A top-level netlist and control statement needs to be defined in Spectre or SPICE format. The recommended approach is to define a subckt in PSPICE netlist format and to instantiate the subckt in a Spectre netlist.

A PSPICE netlist can be included in Spectre by using the following include statements.

```
pspice_include <file> (Spectre format)
.pspice_include <file> (SPICE format)
```

PSPICE file inclusion allows the circuit description to be spread over several files. The include statement itself is replaced by the contents of the file named. If the name given is not an absolute path specification, it is taken relative to the directory of the file currently being read.

The PSPICE file defined in the pspice_include statement is required to contain only PSPICE netlist format. A PSPICE file may also contain include statements such as .inc or .lib to include other PSPICE files. The pspice_include statement cannot be used in a PSPICE netlist.

When Spectre-simulator opens a pspice_include file then it automatically switches to PSPICE mode. When in PSPICE mode, all elements and device models used in the PSPICE netlist are simulated using PSPICE default values and equations. Switching from PSPICE mode to Spectre mode inside a PSPICE file is not supported. After reading the `include` file, Spectre restores the language processing mode to what it was before the file was included, and continues reading the original file starting at the line after the include statement. Lines cannot be continued across file boundaries.

Definition

```
Pspice_include "filename"
```


© 2003-2020 All Rights Reserved.

Tips for Reducing Memory Usage with SpectreRF (rfmemory)

Description

Problem: How can you reduce memory usage when running SpectreRF simulations? What are the things that you need to be aware of?

Solution: The amount of swap/memory that Spectre/SpectreRF requires depends on the following:

- The analysis type you are running (PSS, QPSS, transient, dc, and so on). PSS and QPSS can take up a lot of memory.
- PSS and QPSS shooting can take up a lot of memory. If a reasonably small number of harmonics is needed for your circuit, then harmonic balance will require less memory than the shooting method, especially for systems with multiple input frequencies. More details are provided below.
- The amount of memory required is roughly proportional to the number of nodes in the circuit. Remember that most device models have multiple nodes inside the model.
- The number of nodes/nets you save has only a small effect on memory use and runtime. The number of nodes/nets you save does change the amount of disk space required to save the simulation result.

This help is broken into four sections; Shooting, Harmonic Balance, Small-Signal Analyses, and Envelope.

PSS analysis

The amount of memory required depends on the number of time points in the PSS solution. The number of time points in the solution depends on several factors.

- If you increase the number of harmonics above 10, the minimum number of time points is 20*number of harmonics. Closely spaced input frequencies require a large number of harmonics to be calculated, and thus require large amount of memory.

  For example, consider a system with 2.4GHz and 2.4GHz minus 1MHz, or 2.399GHz. To get to the second harmonic of 2.4 GHz requires 4,800 harmonics, which in turn requires 96,000 timepoints. This large number of timepoints would require a large amount of memory. For such systems, use harmonic balance (hb) instead.

© 2003-2020 All Rights Reserved.

- Increasing the accuracy by selecting conservative or by reducing the value of reltol and/or vabstol has the effect of producing more timepoints. A rough estimate is that for every power of 10 smaller you set reltol, five times as many timepoints will be produced.
- Setting a small maxstep compared to the PSS period or setting maxacfreq above 40*PSS beat frequency will produce more timepoints. Unless you see warning messages in the small-signal analyses that instruct you to set maxacfreq, it is better to leave maxstep and maxacfreq unspecified and set conservative and/or a smaller values for reltol and vabstol. This will have the effect of taking more timesteps only in areas of transition, and longer timesteps where the waveform is static.
- The waveforms produced by the circuit can also affect the number of timepoints. If there are fast transitions in your circuit, the timestep will be reduced in the areas of the transitions to preserve high accuracy of the simulation.

QPSS analysis

- QPSS Analysis should be used only for nonlinear circuits like sampling circuits or switched-capacitor circuits. For other circuits, use hb instead.
- QPSS analysis runs a series of PSS analyses that depend on the number of moderate tones and the number of harmonics set in each moderate tone. Each PSS analysis is one cycle of the signal designated as Large in the QPSS Choosing Analyses Form with all of the input signals applied. The number of harmonics for the large tone and the accuracy settings mentioned above set the number of timepoints for each PSS analysis. The number of PSS analyses (called transient integrations in the Spectre output window) is (2*number of harmonics on moderate tone 1)+1 * (2*number of harmonics on moderate tone 2)+1 and continuing for more input tones. Assuming three harmonics on two moderate tones the number of PSS analyses is (2*3)+1 * (2*3)+1, or 49 total PSS analyses.

Harmonic Balance analysis

- The amount of memory required depends primarily on the number of harmonics in the solution. Setting accuracy options will have only a small effect on the memory size.
- The number of harmonics in the solution depends on the number of input frequencies, the number of harmonics to be calculated for each frequency, and whether frequency cuts are used. The default number of harmonics is calculated as follows: (2*number of harmonics on tone 1)+1 * (2*number of harmonics on tone 2)+1 * (2*number of harmonics on tone 3)+1 and increasing if more inputs are present.
- For a single input and 7 harmonics, (2*7)+1 or 15 harmonics are needed. If there are two inputs with 7 and 3 harmonics set, then 15*7 or 105 harmonics are needed by default.

© 2003-2020 All Rights Reserved.

- Frequency cuts can reduce the number of harmonics that needs to be calculated. For more information on frequency cuts, see the SpectreRF User Guide, Chapter 3. If you want to use frequency cuts, the safest general recommendation is to use the funnel cut with maximum order set between 5 and 9. Use the smallest value of maximum order that produces accurate results.

Small-Signal analysis

Once the PSS, QPSS or HB analysis runs, additional memory is required to run the small-signal analyses. The amount of memory is difficult to predict because different analyses require different amounts of memory. As a rough estimate, the amount of memory might double or triple shortly after the small-signal analysis starts. For shooting method, setting maximum sidebands above about 50 will require more memory. For harmonic balance, the memory depends on the number of harmonics present in the harmonic balance large-signal analysis.

Envelope method

- Envelope method has two engines; shooting and harmonic balance. Harmonic balance is recommended because it always requires less memory and time to run, and it has a fast envelope level 1 analysis available.
- Transistor-level and Level 1 harmonic balance envelope is harmonic balance with a transient engine. The memory required is only slightly more than a single-tone hb analysis with the same number of harmonics that are used in envelope.
- For transistor-level envelope, a harmonic balance simulation is done at each time in the envelope analysis. For fast envelope, a series of harmonic balance analyses are run at the start to characterize the circuit, and then a behavioral simulation runs after that.

You can consider using the following strategies:

1. Never set `useprobes=yes` for SpectreRF simulations. It can cause large errors in the small signal Pxx analyses. Use `useprobes` for linear AC analysis only.
2. Check to see how much swap and memory you have on your computer. Greater than 2GB RAM and 5GB swap is recommended.

   A 64-bit Spectre executable is available with MMSIM releases. This means that there is no 4GB process size limit, which was the case with the 32-bit Spectre executable. This allows much larger circuits to be simulated. If the memory required for simulation is larger than the amount of RAM installed on the machine, the machine will start swapping which dramatically slows the simulation and may cause the simulation to almost completely stop because the disk is so active. The best solution is more RAM on the system. A

© 2003-2020 All Rights Reserved.

partial solution for shooting only is to use the swap file option described below. At least one large machine should be available for post-parasitic simulations to complete successfully without swapping.

3. If you are using shooting and your machine starts to swap, consider setting the swapfile option. This option writes much of the data from pss and qpss shooting large-signal analyses to disk files on your system. Large files will be produced. If the disk is local to the machine that is running the simulation, this will speed things up slightly compared to swapping in the operating system because Spectre manages the disk operations to put the data in concentric cylinders on the machine, but it is still fundamentally much slower than running on a machine that has more RAM. If the disk is a networked drive, the network latency may actually slow the simulation down. Only setting the option will allow runtime comparisons. Harmonic balance does not have this option.

4. For post-layout simulations, consider using RC reduction to reduce the number of nodes in the circuit.

5. Choose the largest possible `PSSfund` frequency. A higher fundamental frequency (`PSSfund`) yields a shorter simulation time.

6. If you have two or more closely spaced frequencies, use harmonic balance instead of PSS.

7. When shooting is used, try to use 10 harmonics or less and don't set the macacfreq or maxstep options unless you get errors from the small-signal analyses. Don't over-tighten the accuracy options.

8. In harmonic balance, use the smallest number of harmonics you can that produce accurate results, and consider using frequency cuts for circuits with multiple input frequencies.

9. If you are using names in harmonic balance or if you are using qpss, make sure that all the sources at the same frequency have the same Frequency Name 1 property.

   Note: This is NOT the Instance Name property which all must be unique.

   Setting the Frequency Name 1 property to the same name signifies to Spectre to treat those sources as a single frequency. For example, imagine you have differential RF inputs at 2.4GHz and I and Q differential LOs at 2.41GHz. There are two RF sources and four LO sources. Both RF sources have the same frequency and all four LO sources have the same frequency. As an example, you might set the RF sources to have the frequency name 1 property "RF" and all the LO sources "LO." In this case, Spectre will solve for two different frequencies as it should. If you named the sources RF1, RF2, LO1, LO2, LO3, and LO4, Spectre will consider these as all separate input frequencies. This becomes a six-tone simulation instead of a two-tone simulation and will take much longer to run and require hugely more memory.

© 2003-2020 All Rights Reserved.

10. In shooting small-signal analyses try to keep the number of sidebands to about 50 or less. More than 50 sidebands will require more memory. Full spectrum pnoise requires less memory than traditional pnoise. In hb small-signal analyses, leave the number of sidebands field unspecified and use the smallest number of harmonics in the harmonic balance analysis that you can that also produce accurate results.

11. In envelope analysis, use the smallest number of harmonics you can to get an accurate result.

12. Run Spectre when no other users are using the same machine so all the RAM is available for your use.

13. In harmonic balance, run the memory estimator on the circuit to have an understanding of the rough memory consumption.

© 2003-2020 All Rights Reserved.

Output Selections (save)

Description

The `save` statement indicates that the values of specific nodes or signals must be saved in the output file. It works in conjunction with the `save` parameter for most analyses. The output file is written in Cadence Parameter Storage Format (PSF), or in Nutmeg/SPICE3 format, which is controlled by a command-line argument or a global option (see the options statement). See options help for the complete list of supported formats. An appropriate postprocessor should be used to view the output, generate plots, or do any further processing.

Definition

```
save X[:param] ... [depth=num] [sigtype=node|dev|subckt|all]
[devtype=component_type] [subckt=subckt_master]
[exclude=[wildcard_patterns_list]] [compression=no|yes] [ports=yes|no]
[filter=none|rc] [probelvl=num] time_window=[t1 t2 t3 t4 ...]
```

The `save` statement takes a list of signals followed by some optional parameters as an argument. `X` can be a node, a component, or a subcircuit and `param` can be a component output parameter or a terminal index. To specify a class of signals, use the pattern matching character `*` for any string and `?` for any character. The parameters control pattern matching. `depth` controls the depth of pattern matching and, by default, matches signals at all hierarchical levels. `sigtype` with the default value `node` defines the type of `X`. If `sigtype=all`, `X` can be a node, a component, or a subcircuit. `devtype` defines the component type and has no default value. `subckt` is used to save signals that are contained only in instances of a given subcircuit master. The signals matching a pattern from the list specified with `exclude` are not saved. When `subckt` is given, the wildcard patterns in the save statement and the depth of pattern matching must be relative to the subcircuit master.

The concept of nodes for the `save` statement is generalized to signals where a signal is a value associated with a topological node of the circuit or some other unknown that is solved by the simulator, such as the current through an inductor or the voltage of the internal node in a diode. Topological nodes can be at the top level or in the subcircuit.

By default, the waveforms defined in the `save` statement are not compressed. Compression can be enabled globally for selected hierarchy levels in the transient statement (`compression`, `complvl`). Compression can also be enabled or disabled individually for each save statement. The compression settings in the save statement overwrite the compression settings in the transient statement.

`time_window` is used to specify the output time interval for transient analysis.Signals in `[t1 t2]` and `[t3 t4]...` are outputted.

© 2003-2020 All Rights Reserved.

The ports parameter saves the subckt ports names as well if `yes` is specified. The default value is `no`. The filter parameter works with wildcarding to filter out the nodes that connect only to parasitics, if `rc` is specified. The default value is `none`.

To probe terminal currents hierarchically at a specified depth, specify the depth using the `probelvl` option to obtain the terminal current for all terminals connected within that depth.

For example:

```
save 7 out OpAmp1.comp M1:currents D3:oppoint L1:1 R4:pwr
```

specifies that node `7`, node `out`, node `comp` in subcircuit `OpAmp1`, the currents through the terminals of `M1`, the oppoint information for diode D3, the current through the first terminal of `L1`, and the instantaneous power dissipated by R4 should be saved. These outputs are saved in addition to any outputs specified by the `save` parameter for the analysis.

To specify a component terminal current, specify the name of the component and the name or the index of the terminal separated by a colon. If `currents` is specified after the component and the colon, all the terminal currents for the component are saved unless the component has only two terminals, in which case only the current through the first terminal is saved. Current is positive if it enters the terminal flowing into the component.

If a component name is followed by a colon and `oppoint`, then the operating point information associated with the component is computed and saved. If the colon is followed by an operating point parameter name (see each component for list of operating point parameters), then the value of that parameter is output.

If only a component name is given, all available information about the component, including the terminal currents and the operating point parameter values, is saved.

Examples of pattern matching

- `save x*.*1 depth=3`

  Saves the voltages of all nodes from level 2 to level 3 whose name starts with `x` and ends in `1`. For example, `x1.n1`, `x1.x2.x3` but not `x1.x2.x3.x4`.

- `save x*.*1 sigtype=subckt`

  Saves all terminal currents of subcircuits from level 2 and above whose name starts with `x` and ends in `1`. For example, `x1.x21:2, x1.x2.x31:3`.

- `save *:c devtype=bjt`

  Saves all collector currents

- `save * subckt=inv`

© 2003-2020 All Rights Reserved.

Saves the voltages of all nodes in the instances of the subcircuit `inv`. For example, `X1.n1` for an instance `X1` of `inv` but not `net091` at the top-level

- `save * exclude=[X1* X2*]`

  Saves the voltages of all nodes excluding the ones whose names start with `X1` or `X2`. For example, `net091`, `X0.res3.n2` but not `X21.res3.n2`.

- `save X1:A probelvl=3`

  Saves all terminal currents that are connected to terminal `A` of subcircuit `X1`, till the third-level depth.

- `save nA:currents probelvl=2`

  Saves the currents of all terminals that are connected to node `nA`, till the second-level depth.

- `save N1 time_window=[1m 2m 3m 4m]`

  Save node N1 from 1ms to 2ms and 3ms to 4ms.

- `save N1 time_window=[1m 2m]`

  `save N1 time_window=[0.5m 2.5m 3m 4m]`

  Save node `N1` from 0.5ms to 2.5ms and 3ms to 4ms

- `save N1 time_window = [ 1m 2m]`

  Saves all waveforms starting with N for entire simulation time, except N1 which is only saved from 1ms to 2ms.

For more information, see *The Save Statement* in the *Spectre Classic Simulator, Spectre APS, Spectre X, and Spectre XPS User Guide*.

© 2003-2020 All Rights Reserved.

Savestate - Recover (savestate)

Description

Savestate-Recover is a transient analysis feature. It is a replacement for Checkpoint-Restart capability.

The Checkpoint-Restart capability saves only the circuit solution for the timepoint at which the simulation is interrupted. Because there is no history information saved for the circuit, glitches, convergence issues, and inaccuracies can result when the simulation is resumed. The Savestate-Recover feature saves the complete state of the circuit, avoiding these issues.

Savestate-Recover provides the following functions:

- You have the option to save circuit information at set intervals or at multiple points during transient analysis. If the simulation halts unexpectedly, you can restart transient analysis from any saved timepoint.
- You can experiment with different accuracy settings over different transient time periods to obtain the optimal speed/accuracy trade-off.

Requirements for Savestate-Recover

When the simulation is restarted:

- Netlist topology must not be changed. Topology changes or the removal/addition of nodes in the restore file causes a fatal error.
- You may edit any netlist parameter as long as the circuit topology remains the same.
- The stop time of Transient analysis must be larger than the timepoint corresponding to the savestate file.
- Saved state file is binary and platform dependent.
- Savestate-Recover works only for transient analysis and the transient analysis must not be within a Sweep or Monte Carlo analysis.

Use Model

- Savestate

  Savestate is enabled/disabled by using the `spectre` command, as follows.

  ```
  spectre [+savestate ] [-savestate ] ...
  ```


© 2003-2020 All Rights Reserved.

where:

- `+savestate` - Enables Savestate. You may use `+ss` as an abbreviation for `+savestate`.
- `-savestate` - Disables Savestate. You may use `-ss` as an abbreviation for `-savestate`.

By default, savestate is on, and checkpoint is off.

- Define saved time points and state file in the `tran` statement. For example:

```
DoTran tran stop=stoptime [ [saveperiod=time] | [saveclock=clock_time] |
[savetime=[time1 time2...]]   [savefile=file.srf]
```

where:

- `saveperiod`, `saveclock`, and `savetime` define the time points to save the states.
  - If `saveperiod` is given, Spectre generates a saved state file periodically based on the transient simulation time. Only the last saved state file is kept.
  - If `saveclock` is given, Spectre generates a saved state file periodically based on real time (wall clock time). Its default value is 1800 seconds (30 minutes).
  - If `savetime` is given, Spectre generates a saved state file on each specified time point.
- `savefile` defines where the saved states are written.
  - If `savefile` is not defined, the default file name is `%C.%A.srf`.

    Where `%C` is the input circuit file name, and `%A` is the analysis name.

If multiple save time points are given, That is,

```
analysisName tran stop=stoptime savetime=[time1 time2 ...] savefile=filename
```

the saved state file is `filename_at_time1`, `filename_at_time2`, and so on.

Besides saving the state based on saveperiod or saveclock or savetime, if savestate is enabled, Spectre automatically saves the states to a file when an interrupt signal like `QUIT`, `TERM`, `INT`, or `HUP` is received for the first time. If interrupt signals are received more than once, Spectre quits immediately.

The `saveclock`, `saveperiod`, and `savetime` parameters should not be specified at the same time.

If more than one parameter is specified, Spectre reads them in the following order:

```
saveperiod
```


© 2003-2020 All Rights Reserved.

```
savetime
saveclock
```

- Recover

  There are two ways to recover the simulation from the saved state file. The first is to define the recover file using the `spectre` command. The second is to define the recover file in a `tran` statement.

  Defining the recover file in the `tran` statement is strongly recommended, especially if there are multiple analyses statements in the netlist.

- Recover from command line

  ```
  spectre [+recover[=filename]]  [-recover] ...
  ```

  where:

  - `+recover` - Enables recover. You may use `+rec` as an abbreviation for `+recover`.
  - `-recover` - Disables recover. You may use `-rec` as an abbreviation for `-recover`.

- Recover from the `tran` statement

  ```
  analysisName tran  recover=filename ...
  ```

  By default, recover is disabled.

- Output Directory on Recovering

  When recovering from a saved state in a Spectre run by using `+recover=state_file` in a command-line option, a new raw directory is created to avoid overwriting the previous simulation results. However, if `recover=state_file` is given in a `tran` statement, the default raw directory is used.

  When defining `recover=state_file` in a `tran` statement, use a different tran name to avoid previous simulation results to be overwritten by the recovered results.

  When a new raw directory is created, the raw directory name is the same as the default raw directory, except that an index (starting from 0) is suffixed to raw, such as `*.raw#`, where `#` is 0, 1, 2, and so on.

  For example, in the first run, enter:

  ```
  spectre input.scs
  ```

  Spectre saves the simulation state in a file on a time point. By default, `input.raw` directory is created.

  When Spectre runs in recover mode:

  ```
  spectre +recover=saved_state_file input.scs
  ```


© 2003-2020 All Rights Reserved.

a new raw directory named `input.raw0` is created. The index of the raw directory is increased by one at each successive recover run. Another use model is that you define multiple transient-analysis runs in a netlist. In the first transient-analysis run, Spectre saves the simulation state on a time point.

In the next transient analysis run, simulation is continued from the saved time point. For example:

```
tran1 tran step=1ps stop=200ns savetime=[50ns] savefile=tran1_save
tran2 tran step=1p stop=400ns  recover=tran1_save_at_50.00ns
```

In this case, the default raw directory is used.

For more information, see *Recovering From Transient Analysis Terminations* section in the *Spectre Classic Simulator, Spectre APS, Spectre X, and Spectre XPS User Guide*.

© 2003-2020 All Rights Reserved.

Sensitivity Analyses (sens)

Description

Use the `sens` control statement to find partial or normalized sensitivities of the output variables with respect to component and instance parameters for the list of the analyses performed. Currently, DC and AC sensitivity analyses are supported. The results of the sensitivity analyses are stored in the output files written in Cadence Parameter Storage Format (PSF). The global option parameter `senstype` (see the options statement) is used to control the type of sensitivity being calculated. In addition, you can use `+sensdata filename` command-line argument or a global option (see the options statement) to direct sensitivity analyses results into a specified ASCII file.

Definition

```
sens (output_variables_list) to (design_parameters_list) for (analyses_list)
```

where:

- `output_variables_list` = `ovar1` `ovar2`, and so on.
- `design_parameters_list` = `dpar1`, `dpar2`, and so on.
- `analyses_list` = `anal1` `anal2` , and so on.

The list of design parameters may include valid instance and model parameters. You can also specify device instances or device models without a modifier. In this case, Spectre attempts to compute sensitivities with respect to all corresponding instance or model parameters. Caution should be exercised in using this option as warnings or errors may be generated if many instance and model parameters cannot be modified. If no design parameters are specified, then all the instance and model parameters are added. The list of the output variables for both AC and DC analyses may include node voltages and branch currents. For DC analyses, it may also include device instance operating point parameters.

Examples

- `sens (q1:betadc 2 Out) to (vcc:dc nbjt1:rb) for (analDC)`

  For this statement, DC sensitivities of `betadc` operating point parameter of transistor `q1` and of nodes `2` and `Out` are computed with respect to `dc` voltage level of voltage source `vcc` and model parameter `rb` for the DC analysis `analDC`. The results are stored in the raw directory with the name in the format `analysisname.sens.analysistype`, that is, `dc.sens.analDC`.

- `sens (1 n2 7) to (q1:area nbjt1:rb) for (analAC)`

© 2003-2020 All Rights Reserved.

For this statement, AC sensitivities of nodes 1, n2, and 7 are computed with respect to the area parameter of transistor `q1` and the model parameter `rb` for each frequency of the AC analysis analAC. The results are stored in the output file `analAC.sens.ac`.

- `sens (1 n2 7) for (analAC)`

  For this statement, AC sensitivities of nodes 1, n2, and 7 are computed with respect to all instance and model parameters of all devices in the design for each frequency of the AC analysis analAC. The results are stored in the file in the format `ac.sens.analAC`.

- `sens (vbb:p q1:int_c q1:gm 7) to (q1:area nbjt1:rb) for (analDC1)`

  For this statement, DC sensitivities of branch current `vbb:p`, the operating point parameter `gm` of the transistor `q1`, the internal collector voltage `q1:int_c` and the node `7` voltage are computed with respect to instance parameter `area` for instance `q1` and model parameter `rb` for model `nbjt1`.

For additional information, see *Sensitivity Analysis* in the *Spectre Classic Simulator, Spectre APS, Spectre X, and Spectre XPS User Guide*.

© 2003-2020 All Rights Reserved.

SpectreRF Summary (spectrerf)

Description

SpectreRF is an optional collection of analyses that are useful for circuits that are driven with a large periodic signal. Examples include mixers, oscillators, switched-capacitor filters, sample-and-holds, chopper stabilized amplifiers, frequency multipliers, frequency dividers, and samplers. They efficiently and directly compute the periodic and quasiperiodic steady-state solution of such circuits and are capable of computing large-and-small-signal behavior, including noise behavior. Therefore, SpectreRF is capable of computing the noise figure or intermodulation distortion of a mixer, the phase noise and harmonic distortion of an oscillator, and the frequency-response and noise behavior of a switched-capacitor filter. For more information about the SpectreRF analyses, run `spectre -help analysisName` where `analysisName` is `pss`, `pac`, `pxf`, `pnoise`, `psp`, `pstb`, `qpss`, `qpac`, `qpxf`, `qpnoise`, `qpsp`, `envlp`, `hb`, `hbac`, `hbsp`, or `hbnoise`.

© 2003-2020 All Rights Reserved.

Stitch Flow Use Model (stitch)

Description

Stitching enables Spectre APS to plug in the parasitic elements while simulation is running. Compared to the flat RC netlist and the hierarchical RC netlist approaches, the Stitching flow has the following advantages:

- Reuse of the pre-layout simulation test-bench. There is no need to change the probe and the measure statements.
- What-if analysis powered by selective stitching.

Spectre APS stitching is enabled by options.

Parasitic File Loading Parameters

- `spf`

  This option specifies the to-be-stitched DSPF file and its stitching scope. The syntax is `spf="scope filename"`. The scope can be a subcircuit or an instance. When a subcircuit is specified as the scope, the DSPF file is stitched to all the instances of that subcircuit. When an instance is specified as the scope, the DSPF file is stitched to that instance only. Multiple DSPF files can be specified for stitching by using the option multiple times.

  Example:

  ```
  spf="mem mem.dspf"
  ```

- `dpf`

  This option specifies the to-be-stitched DPF file and its stitching scope. The syntax is `dpf="scope filename"`. The scope can be a subcircuit or an instance. When a subcircuit is specified as the scope, the DPF file is stitched to all the instances of that subcircuit. When an instance is specified as the scope, the DPF file is stitched to that instance only. Multiple DPF files can be specified for stitching by using the option multiple times.

  Example:

  ```
  dpf="X1.XPLL PLL.dpf" dpf="X1.XMEM mem.dpf"
  ```

  This means that the `PLL.dpf` file needs to be stitched to the `X1.XPLL` instance and the `mem.dpf` file needs to be stitched to the `X1.XMEM` instance.

- `spef`

© 2003-2020 All Rights Reserved.

This option specifies the to-be-stitched SPEF file and its stitching scope. The syntax is `spef="scope filename"`. The scope can be a subcircuit or an instance. When a subcircuit is specified as the scope, the SPEF file is stitched to all the instances of that subcircuit. When an instance is specified as the scope, the SPEF file is stitched to that instance only. Multiple SPEF files can be specified for stitching by using the option multiple times.

Example:

```
spef="adc a.spef"
```

Stitching Parsing Options

- `spfscale`

  This option specifies the scaling factor of all the elements in the parasitic files (DSPF/SPEF/DPF). For example, consider that the width of a device in the DSPF file is w=2. If spfscale=1.0e-6 is used, the actual width will be w=2.0e-6.

- `spfscalec`

  This option specifies the scaling factor of all the capacitors in the parasitic files (DSPF/SPEF/DPF). Example, suppose a capacitor's value in the DSPF file is 2. If `spfscalec=1.0e-15` is used, the actual capacitor value will be 2.0e-15.

- `spfscaler`

  This option specifies the scaling factor of all the resistors in the parasitic files (DSPF/SPEF/DPF). Example, suppose a resistor's value in the DSPF file is 2. If `spfscaler=1.0e-3` is used, the actual capacitor value will be `w=2.0e-3`.

- `spfswapterm`

  This option specifies the swappable terminals of a subcircuit macro-model. The syntax is `spfswapterm="terminal1 terminal2 subcktname"`.

  Example:

  ```
  spfswapterm="n1 n2 nch_mac"
  ```

  This indicates that terminals `n1` and `n2` of `subckt nch_mac` are swappable. In general, this is applicable to devices that are modeled by subcircuits. Multiple `spfswapterm` statements are supported.

- `spfxtorprefix`

  This option specifies the prefix in the names (devices and nets) in the DSPF/SPEF/DPF file. The device names in the prelayout netlist and the DSPF/SPEF file often do not

© 2003-2020 All Rights Reserved.

match. The `spfxtorprefix` option can be used to help match the device names. The syntax is `spfxtorprefix="<substring> [<replace_substring>]"`.

Example:

```
spfxtorprefix="XM X"
```

`XX1`/`XM1` exists in the prelayout netlist but the corresponding device name in the DSPF file is `XMX1`/`XM1`. This option will change `XM` to `X`.

- `spfaliasterm`

  Sometimes the terminal names of devices in DSPF/SPEF/DPF files are different from those in the simulation model library. This happens often in the technology nodes that uses subcircuits to model devices. The syntax is `spfaliasterm="<model|subckt> <prelayout_term1>=<spf_alias1> <prelayout_term2>=<spf_alias2>... <prelayout_termN>=<spf_aliasN>"`. Multiple statements are supported.

  Example:

  ```
  spfaliasterm="nfet_mac n1=D n2=G n3=S n4=B"
  ```

  This means that in subckt `nfet_mac`, terminal `n1` corresponds to terminal `D` in the DSPF file, `n1` corresponds to terminal `G`, `n3` corresponds to terminal `S` and `n4` corresponds to terminal `B`.

- `speftriplet`

  This option specifies the value that should be used for stitching in the SPEF file. This is effective only when the values in the SPEF file are represented by triplets (for instance, `0.325:0.41:0.495`). Default value is 2. Possible values are 1, 2 and 3.

- `spfinstancesection`

  This option controls the backannotation of device parameters in the instance section of the DSPF file. If `spfinstancesection` is turned off, the instance section is ignored (that is, the device parameters are not changed during stitching). Default is on.

- `spfbusdelim = busdelim_schematic [busdelim_parasitic]`

  This option maps the bus delimiter between schematic netlist and parasitic file (i.e. DSPF, SPEF, or DPF). The option defines the bus delimiter in the schematic netlist, and optionally the bus delimiter in the parasitic file. By default, the bus delimiter of the parasitic file is taken from the parasitic file header (i.e. `*|BUSBIT []`, `*|BUS_BIT []`, or `*|BUS_DELIMITER []`). If the bus delimiter is not defined in the parasitic file header, you need to specify it by using the `spfbusdelim` option in schematic netlist.

  Example:

© 2003-2020 All Rights Reserved.

- `spfbusdelim=<>` - `A<1>` in the schematic netlist is mapped to `A_1` in the DSPF file, if the bus delimiter header in the DSPF file is "_".
- s`pfbusdelim=@ []` - `A@1` in the schematic netlist is mapped to to `A[1]` in the DSPF file (the bus delimiter in DSPF header will be ignored).

- `spfinstarraydelim`

  This option specifies the supplemental bus delimiter, if more than one bus delimiter is used in the pre-layout netlist (usually for instance array indexing). This option is similar to `spfbusdelim`.

Selective Stitching Options

- `spfcnet`

  This option specifies the net that has its total capacitance stitched. All other parasitic components, say parasitic resistors, associated with this net are ignored. The full hierarchical names are required. Multiple statements are supported. Wildcards are supported.

  Example:

  ```
  spfcnet=X1.netA
  ```

- `spfcnetfile`

  This option has the same functionality as `spfcent`.However, it accepts a text file in which all the C-only stitched nets are listed. Only one file can be specified. The syntax is `spfcnetfile="filename"`. The format in the file is one line per net.

  Example:

  ```
  spfcnetfile="nets.tex"
  ```

  The format in the nets.tex is:

  ```
  netA
  netB
  netC
  ```

- `spfrcnet`

  This option specifies the name of the net to be stitched with parasitic resistors and capacitors. The other nets are stitched with lumped total capacitances. Multiple statements are supported. Wildcards are supported and you can specify multiple nets. Full hierarchical names are required.

  Example:

  ```
  spfrcnet=netA
  ```


© 2003-2020 All Rights Reserved.

- `spfrcnetfile`

  This option has the same functionality as `spfrcnet`. However, it accepts a text file in which all the RC stitched nets are specified. Only one file can be specified. The syntax is `spfrcnetfile="filename"`. The format in the file is one line per net.

  Example:

  ```
  spfrcnetfile="nets.tex"
  ```

  The format in the nets.tex is:

  ```
  netA
  netB
  netC
  ```

- `spfnetcmin`

  This option allows you to select the net for stitching by the value of its total node capacitance. If a net's total node capacitance exceeds `spfnetcmin`, all parasitics associated with the net are stitched correctly; otherwise, only the total capacitance is added to the net node.

  Example:

  ```
  spfnetcmin=1.0e-6
  ```

- `spfskipnet`

  This option specifies the net to be skipped for stitching, that is, all parasitic components of the net are not stitched. Wildcards and multiple statements are supported.

  Example:

  ```
  spfskipnet=X1.nodeA
  ```

- `spfskipnetfile`

  This option allows you to specify the nets to be skipped as a list in the text file called `file_name`. The syntax is `spfskipnetfile="filename"`. Only one file can be specified. The format in the file is one line per net.

  Example:

  ```
  spfskipnetfile="nets.tex"
  ```

  `nets.tex` file format is:

  ```
  netA
  netB
  netC
  ```


© 2003-2020 All Rights Reserved.

Stitching Message Control Option

- `spfmsglimit`

  This option specifies the maximum number of messages to be printed in the `spfrpt` file. The messages in the `spfrpt` file are categorized by their ID number (STITCH-ID). This option specifies the maximum number of messages for a particular type of messages by using their STITCH-ID. The syntax is `spfmsglimit="number STITCH-ID_1 STITCH-ID_2"`. When STITCH-ID is not specified, the tool assigns the maximum message number limit to all messages categories (STITCH-IDs).

  Example:

  ```
  spfmsglimit="10 STITCH-0010"
  ```

  This tells the tool to print not more than 10 messages for the STITCH-0010 message category, in the meantime, for the other message categories, the default maximum limit of 50 messages will apply.

For additional information, see *Parasitic Backannotation of DPSF/SPEF/DPF Files* in the *Spectre Classic Simulator, Spectre APS, Spectre X, and Spectre XPS User Guide*.

© 2003-2020 All Rights Reserved.

Subcircuit Definitions (subckt)

Description

Hierarchical Circuit

The `subckt` statement is used to define a subcircuit. Subcircuit definitions are circuit macros that can be expanded anywhere in the circuit any number of times. When an instance in your input file refers to a subcircuit definition, the instances specified within the subcircuit are inserted into the circuit. Subcircuits may be nested. Therefore, a subcircuit definition may contain instances of other subcircuits. Subcircuits may also contain component, analysis, or model statements. Subcircuit definitions can also be nested, in which case the innermost subcircuit definition can only be referenced from within the subcircuit in which it is defined, and cannot be referenced from elsewhere.

Instances that instantiate a subcircuit definition are referred to as subcircuit calls. The node names (or numbers) specified in the subcircuit call are substituted, in order, for the node names given in the subcircuit definition. All instances that refer to a subcircuit definition must have the same number of nodes as are specified in the subcircuit definition and in the same order. Node names inside the subcircuit definition are strictly local unless declared otherwise in the input file with a global statement.

Subcircuit Parameters

Parameter specification in subcircuit definitions is optional. In the case of nested subcircuit definitions, parameters that have been declared for the outer subcircuit definition are also available within the inner subcircuit definition. Parameters that are specified are referred to by name, optionally followed by an `=` sign and a default value. If, when making a subcircuit call, you do not specify a particular parameter, this default value is used in the macro expansion. Subcircuit parameters can be used in expressions within the subcircuit consisting of subcircuit parameters, constants, and various mathematical operators. Run `spectre -h expressions` for details about Spectre expression handling capability. Run `spectre -h parameters` for details about how Spectre handles netlist parameters, including subcircuit parameters, and how they inherit within nested subcircuit definitions.

Subcircuits always have an implicitly defined parameter `m`. This parameter is passed to all components in the subcircuit, and each component is expected to multiply it by its own multiplicity factor. In this way, it is possible to efficiently model several copies of the subcircuit in parallel. Any attempt to explicitly define `m` on a `parameters` line results in an error. In addition, because `m` is only implicitly defined, it is not available for use in expressions in the subcircuit.

© 2003-2020 All Rights Reserved.

Inline Subcircuits

An inline subckt is a special case of a subckt where one of the devices or models instantiated within this subckt does not get its full hierarchical name. It instead inherits the subckt call name. An inline subckt is syntactically denoted by the presence of the keyword `inline` before the `subckt`. It is called in the same manner as a regular subcircuit. The body of the inline subcircuit can typically contain one of the following, based on different use models:

- Multiple device instances, one of which is the `inline` component
- Multiple device instances, one of which is `inline` and one or more parameterized models
- A single `inline` device instance and a parameterized model to which the device instance refers

The `inline` component is denoted by giving it the same name as the inline subcircuit. When the subcircuit is flattened, the `inline` component does not take on a hierarchical name such as `X1.M1`, it instead takes on the name of the subckt call, such as `X1`. Any non-inline components in the subckt take on the regular hierarchical name, as if the subcircuit were a regular subckt (that is, not an `inline` subckt).

Probing the inline device

Spectre allows the following list of items to be saved or probed for primitive devices. These would also apply to devices modeled as the inline components of inline subcircuits:

- All terminal currents. For example, `save q1:currents`
- Specific (index) terminal current. For example, `save q1:1 (#1=collector)`
- Specific (named) terminal current. For example, `save q1:b ("b"=base)`
- Save all operating point info. For example, `save q1:oppoint`
- Save specific operating point info. For example, `save q1:vbe`
- Save all currents and oppoint info. For example, `save q1`

Parameterized Models and Inline Subckts

Inline subckts can be used in the same way as regular subcircuits to implement parameterized models, however, inline subckts provide some powerful new options. When an inline subcircuit contains both a parameterized model and an inline device that references that model, you can create instances of the device, and each device automatically gets an appropriately scaled model assigned to it. For example, the instance parameters to an inline

© 2003-2020 All Rights Reserved.

subckt could represent something like emitter width and length of a BJT device, and within the subckt, a model card that is parameterized for emitter width and length and scales can be created accordingly. When you instantiate the macro, supply the values for the emitter width and length, and a device is instantiated with an appropriate geometrically scaled model. Again, the inline device does not get a hierarchical name and can be probed in the same manner as the inline device in the previous section on modeling parasitics, that is, the inline device can be probed just as if it were a simple device, and not actually embedded in a subckt

Automatic Model Selection using Inline Subckts

See `spectre -h if` for a description on how to combine Spectres `structural if` statement with inline subckts to perform automatic model selection based on `any` netlist/subckt parameter.

For additional information on subcircuits, see *Subcircuits* in the *Spectre Classic Simulator, Spectre APS, Spectre X, and Spectre XPS User Guide*.

Definition

```
[inline] subckt <Name> (<node1> ... <nodeN>)
```

Example 1: subckt

```
subckt coax (i1 o1 i2 o2)
    parameters zin=50 zout=50 vin=1 vout=1 len=0
    inner i1 o1 i2 o2  tline z0=zin vel=vin len=len
    outer o1 0  o2 0   tline z0=zout vel=vout len=len
ends coax
```

Defines a parameterized coaxial transmission line macro from two ideal transmission lines. To instantiate this subcircuit, one could use an instance statement such as:

```
Coax1 pin nin out gnd coax zin=75 zout=150 len=35m
```

Example 2: inline subckt - parasitics

Consider the following example of an inline subcircuit, which contains a mosfet instance, and two parasitic capacitances:

```
inline subckt s1 (a b)                // "s1" is name of subckt
    parameters p1=1u p2=2u
    s1 (a b 0 0) mos_mod l=p1 w=p2       // "s1" is "inline" component
    cap1 (a 0) capacitor c=1n
    cap2 (b 0) capacitor c=1n
ends s1
```


© 2003-2020 All Rights Reserved.

The following circuit creates a simple mos device instance `M1`, and calls the inline subcircuit `s1` twice (`M2` and `M3`)

```
M1 (2 1 0 0) mos_mod
M2 (5 6) s1 p1=6u p2=7u
M3 (6 7) s1
```

This expands/flattens to:

```
M1 (2 1 0 0) mos_mod
M2 (5 6 0 0) mos_mod l=6u w=7u  // the "inline" component, inherits call name
M2.cap1 (5 0) capacitor c=1n    // a regular hierarchical name
M2.cap2 (6 0) capacitor c=1n
M3 (6 7 0 0) mos_mod l=1u w=2u  // the "inline" component, inherits call name
M3.cap1 (6 0) capacitor c=1n
M3.cap2 (7 0) capacitor c=1n
```

Here, the final flattened names of the three mosfets (one for each instance) are `M1`, `M2`, and `M3`, rather than `M1`, `M2.s1`, and `M3.s1` as they would be if `s1` was a regular subcircuit. However, the parasitic capacitors (which you may not interested in, or perhaps, even aware of, if the inline subckt definition was written by a different modeling engineer) have full hierarchical names.

Example 3: inline subckt - scaled models

Consider the following example, in which a parameterized model is declared within an inline subcircuit for a bipolar transistor. The model parameters are emitter width, length, and area, and also the temperature delta (`trise`) of the device above nominal. Ninety-nine instances of a 4*4 transistor are then placed and one instance of a transistor with area=50 is placed. Each transistor gets an appropriately scaled model.

Declare a subckt, which instantiates a transistor with a parameterized model. The parameters are emitter width and length.

```
inline subckt bjtmod (c b e s)
parameters le=1u we=2u area=le*we trise=0
model mod1 bjt type=npn bf=100+(le+we)/2*(area/1e-12)
+       is=1e-12*(le/we)*(area/1e-12)
bjtmod (c b e s) mod1 trise=trise       // "inline" component
ends bjtmod
```

some instances of this subckt

```
q1 (2 3 1 0) bjtmod le=4u we=4u         // trise defaults to zero
q2 (2 3 2 0) bjtmod le=4u we=4u trise=2
q3 (2 3 3 0) bjtmod le=4u we=4u
.....
```


© 2003-2020 All Rights Reserved.

```
.....
q99 (2 3 99 0) bjtmod le=4u we=4u
q100 (2 3 100 0) bjtmod le=1u area=50e-12
```


© 2003-2020 All Rights Reserved.

Vec/Vcd/Evcd Digital Stimulus (vector)

Description

Spectre supports Digital Vector (VEC), Verilog-Value Change Dump (VCD), and Extended Verilog-Value Change Dump (EVCD).

VEC

To process digital vector files, the following command card needs to be specified in the netlist.

In Spice netlist:

```
.vec "vector_filename" [HLCheck = 0|1]
```

or

```
.vec vector_filename [HLCheck = 0|1]
```

Quotation marks can be double or single in Spice Netlist.

In Spectre netlist,

```
vec_include "vector_filename" [HLCheck = 0|1]
```

where,

`vector_filename` is the filename of the digital vector file.

`HLCheck = 0 | 1` is a special flag (default = off) to create the vector output check for the H and L states of input signals. Bidirectional and output signals always check H and L states and are unaffected by the HLCheck flag.

Normally, you do not need to use the HLCheck flag.

Each command card specifies only one VEC file. If a netlist needs to include multiple VEC files, `multiple.vec`/`vec_include` cards must be used. For example, if a netlist contains three VEC files, it needs three .vec cards, as given below:

```
.vec "file1.vec"
.vec "file2.vec"
.vec "file3.vec"
```


© 2003-2020 All Rights Reserved.

VCD/EVCD

VCD and EVCD formats are widely used in digital circuit design and contain different kinds of information for transistor-level simulation. You need to provide signal information, such as timing characteristics, voltage threshold, and driving ability of input signals, for each VCD or EVCD file.

Because VCD and EVCD formats are compatible, the same signal information file can be shared between them.

The VCD file (ASCII format) contains information about value changes for selected variables in the circuit design. Spectre simulator supports two types of VCD files:

`Four states` - represents variable changes in 0, 1, x (unknown or not needed), and z (tri-state) without providing strength information and port direction.

`Extended` - represents variable changes in all states and provides strength information and port direction.

To process the VCD/EVCD file in Spectre, the following command card needs to be specified in the netlist.

In Spice netlist:

```
.vcd "vcd_filename" "signal_info_filename"
.evcd "evcd_filename" "signal_info_filename"
```

In Spectre netlist:

```
vcd_include  "vcd_filename" "signal_info_filename"
evcd_include "evcd_filename" "signal_info_filename"
```

Each command card specifies only one VCD file. If a netlist needs to include multiple VCD files, `multiple.vcd/vcd_include` cards must be used. For example, if a netlist contains three VCD files, it needs three `.vcd` cards, as given below:

```
.vcd "file1.vcd" "file1.signal"
.vcd "file2.vcd" "file2.signal"
.vcd "file3.vcd" "file3.signal"
```

Output Check

For VEC, VCD, and EVCD output check, the results are written in two files under the raw directory, one a check error report file `%A.vecerr` and the other a check summary report file `%A.veclog` where, `%A` is the analysis name.

© 2003-2020 All Rights Reserved.

To find VEC VCD and EVCD file, `signal_info` file format description and examples, refer to the *Digital Vector File Format* chapter in the *Spectre Classic Simulator, Spectre APS, Spectre X, and Spectre XPS User Guide* for details.

© 2003-2020 All Rights Reserved.

Verilog-A Usage and Language Summary (veriloga)

Description

Verilog-A is an analog hardware description language standard from Open Verilog International. It enables analog circuit behavior to be described at a high level of abstraction. Behavioral descriptions of modules and components may be instantiated in a Spectre netlist along with regular Spectre primitives.

Verilog-A descriptions are written in files different from the Spectre netlist file. These descriptions are written in modules (see the module `alpha` below). To include a module in the Spectre netlist, first add the line `ahdl_include "VerilogAfile.va` to the Spectre netlist file (where, `VerilogAfile.va` is the name of the file in which the required module is defined). The module is instantiated in the Spectre netlist in the same manner as Spectre primitives, for example:

```
name (node1 node2) alpha arg1=4.0 arg2=2
```

This instantiates an element `alpha`, which has two nodes and two parameters.

AHDL Linter can be used to improve Verilog-A model quality. It can help to avoid potential convergence or performance problems, and to improve model accuracy, reusability and portability. Refer to the *Verilog-A Language Reference manual* for more information.

Verilog-A simulation performance has been improved by compiling the Verilog-A modules. This is explained in more detail in the Verilog-A compilation section below.

Module Template

The following is a Verilog-A module template

```
include "discipline.h"
include "constants.h"
module alpha( n1, n2 );
electrical n1, n2;
parameter real arg1 = 2.0;
parameter integer arg2 = 0;
    real local;
    // this is a comment
    analog begin
        @ ( initial_step ) begin
        // performed at the first timestep of an analysis
        end
```


© 2003-2020 All Rights Reserved.

```
        // module behavioral description
        V(n1, n2) <+ I(n1, n2) * arg1;
        @ ( final_step ) begin
        // performed at the last time step of an analysis
        end
    end
endmodule
```

Verilog-A Compilation

The first time a verilogA file is used in simulation, Spectre performs a one-time compilation step. Following the initial compilation, recompilation is performed only if the Verilog-A source is changed.

The compiled C code flow stores the compiled shared objects in a database on the disk for the simulation to use. The shared objects are stored in a directory named `ahdlSimDB`. By default, this database is created in the current working directory and given a name created by appending `.ahdlSimDB` to the circuit name. You can specify an alternative location for ahdlSimDB by setting the `CDS_AHDLCMI_SIMDB_DIR` environment variable to the path of a directory, as follows:

```
setenv CDS_AHDLCMI_SIMDB_DIR /projects/ahdlcmiSimDirs
```

If the path is writable, `adhlSimDB` is created there. If the path is not writable or does not exist, an error is reported.

To store compiled objects, use a second type of database, named `ahdlShipDBs`. To create such databases, set the `CDS_AHDLCMI_SHIPDB_COPY` to `YES`, as follows:

```
setenv CDS_AHDLCMI_SHIPDB_COPY YES
```

In this case, an `ahdlShipDB` is created for each Verilog-A file in the directory that contains the Verilog-A files, if the directory is writable. If the directory is not writable, no `ahdlShipDBs` are created for the modules in the Verilog-A file that is being processed.

If the `CDS_AHDLCMI_SHIPDB_DIR` environment variable (or the equivalent, but obsolete, `CDS_AHDLCMI_DIR` variable) is also set to a writable path, the `ahdlShipDB` database is created there and shared by all the Verilog-A files used for simulations that are run while this environmental variable is set. If the `CDS_AHDLCMI_SHIPDB_DIR` is not set to a writable path or the path does not exist, a warning is reported and ahdlShipDBs are not created.

The reuse of Verilog-A compiled library can also be achieved by command-line options, refer to the usage of the Spectre command-line options: -ahdlshipdbdir and -ahdlshipdbmode.

© 2003-2020 All Rights Reserved.

Language Summary

The following provides a summary of the Verilog-A analog hardware description language. For more information refer to *Verilog-A Reference Manual*.

© 2003-2020 All Rights Reserved.

Analog Operators/Waveform Filters

`ddt(x <,abstol> )`	Differentiate x with respect to time.
`idt(x, ic <, assert <, abstol> > )`	Integrate x with respect to time. Output = ic during dc analysis and when assert is 1.
`idtmod(x <, <ic <, modulus <, offset <, abstol> > > > )`	Circular Integration of x with respect to time. Output = ic during DC analysis. Integration is performed with given offset and modulus, if specified.
`transition(x <, delay <, trise <, tfall <, timetol> > > >)`	Specify details of signal transitions. For efficient simulation, it is recommended that x not be a continuous signal, that is, a function of a probe. See the Verilog-A manual for further explanation of this issue.
`slew(x <, SRpos <, SRneg>>)`	Model slew rate behavior.
`delay(x, time_delay, max_delay)`	Response(t) = x(t - time_delay).
`zi_nd(x, numer, denom, period, < ttransition <,sample offset time > )`	z-domain filter function, numerator-denominator form.
`zi_zd(x, zeros, denom, period, < ttransition <,sample offset time > )`	z-domain filter function, zero-denominator form.
`zi_np(x, numer, poles, period, < ttransition <,sample offset time > )`	z-domain filter function, numerator-pole form.
`zi_zp(x, zeros, poles, period, < ttransition <,sample offset time > )`	z-domain filter function, zero-pole form.
`laplace_nd(x, numer, denom, <, abstol > )`	s-domain filter function, numerator-denominator form.
`laplace_zd(x, zeros, denom, <, abstol > )`	s-domain filter function, zero-denominator form.
`laplace_np(x, numer, poles, <, abstol > )`	

© 2003-2020 All Rights Reserved.

s-domain filter function, numerator-pole form.

`laplace_zp(x, zeros, poles, <, abstol > )`

s-domain filter function, zero-pole form.

© 2003-2020 All Rights Reserved.

Built-In Mathematical Functions

`abs(x)`	Absolute value
`exp(x)`	Exponential if x < 80
`ln(x)`	Natural logarithm
`log(x)`	Log base 10
`sqrt(x)`	Square root
`min(x,y)`	Minimum
`max(x,y)`	Maximum
`pow(x,y)`	x to the power of y

Noise Functions

`white_noise( power <, tag > )`

Generates white noise with given power. Noise contributions with the same tag are combined for a module.

`flicker_noise( power, exp <, tag > )`

Generates pink noise with given power at 1 Hz that varies in proportion to 1/f^exp. Noise contributions with the same tag are combined for a module.

`noise_table( vector <, tag > )`

Generates noise where power is determined by linear interpolation from the given vector of frequency-power pairs. Noise contributions with the same tag are combined for a module.

AC Analysis Stimuli

`ac_stim( <analysis_name <, mag <, phase > > > )`

Small signal source of specified magnitude and phase in radians, active for given analysis.

© 2003-2020 All Rights Reserved.

Analog Events

Analog events must be contained in an analog event detection statement; @(analog_event) statement.

`cross(x, direction <, timetol <, abstol <, enable >>>)`	Generates an event when x crosses zero.
`above(x <, timetol <, abstol <, enable >>>)`	Generates an event when x becomes greater than or equal to zero. An above event can be generated and detected during initialization. By contrast, a cross event can be generated and detected only after at least one transient time step is complete.
`timer(start_time <, period <, timetol <, enable >>> )`	Set (optionally periodic) breakpoint event at time = start_time.
`initial_step< ( arg1 <, arg2 <, etc... > > )`	Generate an event at the initial step of an analysis. arg1, arg2, and so on. Examples of analyses strings are "dc", "tran", "ac", "pss", "noise", "pdisto", "qpss", "pac", "pnoise", "pxf", "sp", "tdr", "xf", "envlp", "psp", "qpsp", "qpac", "qpnoise", "qpxf", "static", "ic", and so on.
`final_step< ( arg1 <, arg2 <, etc... > > )`	Generate an event at the final step of an analysis. arg1, arg2, and so on. Examples of analyses strings are "dc", "tran", "ac", "pss", "noise", "pdisto", "qpss", "pac", "pnoise", "pxf", "sp", "tdr", "xf", "envlp", "psp", "qpsp", "qpac", "qpnoise", "qpxf", "static", "ic", and so on.

© 2003-2020 All Rights Reserved.

Timestep Control

`bound_step(max_step)`	Limit timestep, (timestep <= max_step).
`last_crossing(x, direction)`	Return time when expression last crossed zero in a given direction.
`discontinuity(n)`	Hint to simulator that discontinuity is present in nth derivative.

Simulator IO Functions

`$display(argument_list)`	Print data to stdout. Formatting strings may be interspersed between arguments/data.
`$fdisplay(fptr, argument_list)`	Print data to a file. Formatting strings may be interspersed between arguments/data.
`$strobe(argument_list)`	Print data to stdout. Formatting strings may be interspersed between arguments/data.
`$fstrobe(fptr, argument_list)`	Print data to a file. Formatting strings may be interspersed between arguments/data.
`$fscanf(fptr, "format string" <, arguments>)`	
	Read data from a file
`$fopen("filename", mode)`	Open a file for reading/writing
`$fclose(fptr)`	Close a file
`$finish<(n)>`	Finish the simulation
`$stop<(n)>`	Stop the simulation

Simulator Environment Functions

`$realtime`	Returns current simulation time
`$temperature`	Returns ambient simulation temperature (K)
`$vt`	Returns thermal voltage
`$vt(temp)`	Returns thermal voltage at given temp

`$analysis(analysis_string1<, analysis_string2 <, ...>>)`

© 2003-2020 All Rights Reserved.

	Returns true(1) if the current analysis phase matches one of the given analyses strings. The following are the examples of analyses strings: "dc", "tran", "ac", "pss", "noise", "pdisto", "qpss", "pac", "pnoise", "pxf", "sp", "tdr", "xf", "envlp", "psp", "qpsp", "qpac", "qpnoise", "qpxf", "static", "ic", and so on.

Parameter Functions

`$pwr( x )`	Assignment of model power consumption. Adds the expression x to the pwr parameter of a module.

Data Types

`integer`	Discrete numerical type.
`real`	Continuous numerical type.

Data Qualifiers

`parameter`	Indicates that a variable is a parameter and so may be given a different value when the module is instantiated, and that it may not be assigned a different value inside the module.

Structural Statements

Structural statements are used inside the module block but outside the analog block.

`module_or_primitive #(<.param1(expr1)<,...>>) inst_name (<node1 <, ..>> );`	
	Creates a new instance of module_or_primitive named `inst_name`.

© 2003-2020 All Rights Reserved.

Environment Variables

CDS_AHDLCMI_SHIPDB_COPY	Set this environment variable to YES to use AHDL ship databases (ahdlShipDBs). When the environment variable is to YES, the software creates an ahdlShipDB for each Verilog-A file in the directory that contains the Verilog-A file, if the directory is writable. If the directory is not writable, the software does not create any ahdlShipDBs for the modules in the Verilog-A file (see CDS_AHDLCMI_SHIPDB_DIR).
CDS_AHDLCMI_SHIPDB_DIR	Specifies the path to a directory for ahdlShipDB. All Verilog-A files share this path. If the path specified by this variable is not writable, or the path does not exist, the software does not create any ahdlShipDB and generates a warning. For example, setenv CDS_AHDLCMI_SHIPDB_DIR /export/shared/objects.
CDS_AHDL_COMPILEC_MAX_LOAD	Set this environment variable to change the max_load value for parallel compilation of AHDL generated C code. When the system load average is above max_load, parallel compilation is turned off. For example, setenv CDS_AHDL_COMPILEC_MAX_LOAD 4.0.
CDS_AHDL_DDT_SCALE	Set this environment variable to scale the value of ddt to the specified range for better convergence. The default value is 1e-17.
CDS_AHDL_FINISH_MODE	Set this environment variable to 1 to cause the $finish function to stop the current analysis instead of stopping the whole simulation. The default value is 0.
CDS_AHDL_IDT_SCALE	Set this environment variable to scale the value of idt to the specified range for better convergence. The default value is 1.
CDS_AHDL_IGNORE_HIDDEN_STATE	Set this environment variable to YES to process all hidden state variables as non-hidden state variables for all Verilog-A modules.

© 2003-2020 All Rights Reserved.

CDS_AHDL_IGNORE_OPPOINT	Set this environment variable to YES to ignore all operating point calculations. Set the environment variable to NO to disable optimization. The default value is YES for compact models and NO for normal models.
CDS_AHDL_REUSE_LIB	In +aps, ++aps, +xps and +ms modes, the software automatically searches the pre-run shared library and reuses it. Set this environment variable to NO to disable the automatic search and reuse of pre-run shared library.
CDS_CMI_COMPLEVEL	Set this environment variable to control GCC optimization level when compiling AHDL-generated C code flow. The environment value is from 0 to 3, which implies that GCC will use level O0 ~ O3 to compile AHDL C code. O3 is the default compilation level and gives better optimization.
CDS_VLOGA_INCLUDE	Set this environment variable to specify the directory that contains the file with the "include" directive. You can specify more than one directory by using comma(,), colon(:), or semicolon(;) as delimiters to separate the directories. For example, `setenv CDS_VLOGA_INCLUDE "dir1;dir2"` or `setenv CDS_VLOGA_INCLUDE dir1:dir2`.
CDS_AHDL_LRM_COMPATIBILITY	Set this environment variable to specify the version of LRM. The default value is `2.3`. For example, setenv `CDS_AHDL_LRM_COMPATIBILITY 2.4`.
CDS_AHDL_AUTOGDEV_SUPPORT	Set this environment variable to NO to prevent a Verilog-A model from automatically adding the simulation parameter `gdev` at a non-linear branch when the kernel uses the `gdev` method. The default value is YES, which means that the Verilog-A model adds the simulation parameter `gdev` by default.

© 2003-2020 All Rights Reserved.

CDS_AHDL_AUTOGMIN_INSERT	Set this environment variable to YES to enable a Verilog-A model to add the simulation parameter gmin at a non-linear branch. The default value is NO.

© 2003-2020 All Rights Reserved.

5

Circuit Checks

This chapter discusses the following topics:

- Dynamic Subckt Instance Activity Check (dyn_activity) on page 563
- Dynamic Active Node Check (dyn_actnode) on page 565
- Dynamic Capacitor Voltage Check (dyn_capv) on page 567
- Dynamic DC Leakage Path Check (dyn_dcpath) on page 569
- Dynamic Delay Check (dyn_delay) on page 572
- Dynamic Diode Voltage Check (dyn_diodev) on page 575
- Dynamic Excessive Element Current Check (dyn_exi) on page 577
- Dynamic Excessive Rise, Fall, Undefined State Time Check (dyn_exrf) on page 579
- Dynamic Floating Node Induced DC Leakage Path Check (dyn_floatdcpath) on page 582
-
- Dynamic Glitch Check (dyn_glitch) on page 597
- Dynamic HighZ Node Check (dyn_highz) on page 600
- Dynamic MOSFET Voltage Check (dyn_mosv) on page 605
- Dynamic Node Capacitance Check (dyn_nodecap) on page 607
- Dynamic Noisy Node Check (dyn_noisynode) on page 609
- Dynamic Pulse Width Check (dyn_pulsewidth) on page 612
- Dynamic Resistor Voltage Check (dyn_resv) on page 615
- Dynamic Setup and Hold Check (dyn_setuphold) on page 617
- Dynamic Subckt Port Voltage/Current Check (dyn_subcktport) on page 623

© 2003-2020 All Rights Reserved.

- Dynamic Subckt Port Power Check (dyn_subcktpwr) on page 625
- Static Capacitor Check (static_capacitor) on page 628
- Static Capacitor Voltage Check (static_capv) on page 630
- Static DC Leakage Path Check (static_dcpath) on page 635
- Static Diode Voltage Check (static_diodev) on page 637
- Static ERC Check (static_erc) on page 639
- Static HighZ Node Check (static_highz) on page 645
- Static MOSFET Voltage Check (static_mosv) on page 648
- Static NMOS to vdd count (static_nmos2vdd) on page 651
- Static NMOS Forward Bias Bulk Check (static_nmosb) on page 652
- Static Always Conducting NMOSFET Check (static_nmosvgs) on page 655
- Static PMOS Forward Bias Bulk Check (static_pmosb) on page 659
- Static Always Conducting PMOSFET Check (static_pmosvgs) on page 662
- Static Resistor Check (static_resistor) on page 668
- Static Resistor Voltage Check (static_resv) on page 670
- Static Subckt Port Voltage Check (static_subcktport) on page 672
- Static Transmission Gate Check (static_tgate) on page 674
- Static Voltage Domain Device Check (static_voltdomain) on page 678

© 2003-2020 All Rights Reserved.

Dynamic Subckt Instance Activity Check (dyn_activity)

Description

This check reports activity percentage of an instance relative to a circuit. The activity percentage is the ratio of the events in the instance versus the events in the entire circuit.

The results are written to the dynamic.xml file, which can be viewed in a Web browser. This check is supported only by Spectre XPS.

For additional information, refer to the *Dynamic Subckt Instance Activity Check* section in the *Spectre Classic Simulator, Spectre APS, Spectre X, and Spectre XPS User Guide*.

Definition

```
Name dyn_activity parameter=value ...
```

Parameters

Filtering parameters

1	`time_window=[tstart, tstop] sec`	Time window during which the circuit check is applied. Multiple non-overlapping time windows are supported. Default time window is `0` to `tend`.
2	`error_limit=10000`	Maximum number of errors reported. Default is `10000`.
3	`min_activity=0`	Any block activity below the minimum activity percentage will not be reported. The value can be between `0` and `1`. Default is `0`.

Wildcard scoping

4	`inst=[...]`	Subcircuit instances to which the check is applied. Default includes all instances (`inst=*`).

© 2003-2020 All Rights Reserved.

5	`xinst=[...]`	Subcircuit instances to be excluded from the check. Default is `none`.
6	`subckt=[...]`	The instances of the specified subcircuit to which the check is applied. Default includes all subcircuits (`subckt=*`).
7	`xsubckt=[...]`	The instances of the specified subcircuits that are excluded from the check. Default is `none`.
8	`depth=8`	Hierarchy levels (starting from top, instance, or subcircuit scope) to be checked. Default is `8`.

Parameter Index

In the following index, the number corresponding to each parameter name indicates where to find the description of that parameter.

```
depth  8          inst  4          subckt  6          xinst  5

error_limit  2    min_activity  3  time_window  1     xsubckt  7
```


© 2003-2020 All Rights Reserved.

Dynamic Active Node Check (dyn_actnode)

Description

The active node checking analysis detects nodes with voltage changes that exceed the user-defined threshold `dv`. The voltage change is defined as the peak-to-peak voltage (Vpp) within a time window.

The results are written to the dynamic.xml file, which can be viewed in a Web browser.

For additional information, refer to the *Dynamic Active Node Check* section in the *Spectre Classic Simulator, Spectre APS, Spectre X, and Spectre XPS User Guide*.

Definition

```
Name dyn_actnode parameter=value ...
```

Parameters

Design check parameters

1	`node="[...]"`	Nodes to which the check is applied. Default is `none`.
2	`dv=0.1 v`	Voltage change threshold for the active nodes. Default is 0.1 volt.
3	`type=act`	Report inactive or active nodes or both. Possible values are `act`, `inact`, and `both`.

Filtering parameters

4	`time_window=[tstart, tstop] sec`	Time window during which the circuit check is applied. Multiple non-overlapping time windows are supported. Default time window is 0 to tend.
5	`error_limit=10000`	Maximum number of errors reported. Default is 10000.

© 2003-2020 All Rights Reserved.

6	`fanout=all`	Fanout setting to filter node with specified connection. Possible values are `all`, `gate`, and `bulk`.

Wildcard scoping

7	`inst=[...]`	Subcircuit instances to which the check is applied. Default includes all instances (`inst=*`).
8	`xinst=[...]`	Subcircuit instances to be excluded from the check. Default is `none`.
9	`subckt=[...]`	The instances of the specified subcircuit to which the check is applied. Default includes all subcircuits (`subckt=*`).
10	`xsubckt=[...]`	The instances of the specified subcircuits that are excluded from the check. Default is `none`.
11	`depth=8`	Hierarchy levels (starting from top, instance, or subcircuit scope) to be checked. Default is `8`.

Parameter Index

In the following index, the number corresponding to each parameter name indicates where to find the description of that parameter.

depth 11	fanout 6	subckt 9	xinst 8
dv 2	inst 7	time_window 4	xsubckt 10
error_limit 5	node 1	type 3	

© 2003-2020 All Rights Reserved.

Dynamic Capacitor Voltage Check (dyn_capv)

Description

Reports capacitor elements fulfilling the conditional expression on element voltages for a duration longer than the user-specified threshold duration.

Supported capacitor variables are: v(1,2), v(1), and v(2)

Supported operators are: +, -,*, /, ==,!=, <, <=, >, >=,||, &&, and !

The results are written to the dynamic.xml file, which can be viewed in a Web browser. This check is supported only by Spectre XPS. For Spectre and Spectre APS, use assert statement.

For additional information, refer to the *Dynamic Capacitor Voltage Check* section in the *Spectre Classic Simulator, Spectre APS, Spectre X, and Spectre XPS User Guide*.

Definition

```
Name dyn_capv parameter=value ...
```

Parameters

Design check parameters

1	`cond`	The conditional expression to be fulfilled. Default is none.
2	`duration=5.00E-09 sec`	Duration threshold. Default is `5.00E-09 sec`.

Filtering parameters

3	`time_window=[tstart, tstop] sec`	The time window during which the circuit check is applied. Multiple non-overlapping time windows are supported. Default time window is `0` to `tend`.

© 2003-2020 All Rights Reserved.

4	`error_limit=10000`	Maximum number of errors reported. Default is `10000`.

Wildcard scoping

5	`inst=[...]`	Subcircuit instances to which the check is applied. Default includes all instances (`inst=*`).
6	`xinst=[...]`	Subcircuit instances to be excluded from the check. Default is `none`.
7	`subckt=[...]`	The instances of the specified subcircuit to which the check is applied. Default includes all subcircuits (`subckt=*`).
8	`xsubckt=[...]`	The instances of the specified subcircuits that are excluded from the check. Default is `none`.
9	`depth=8`	Hierarchy levels (starting from top, instance, or subcircuit scope) to be checked. Default is `8`.

Parameter Index

In the following index, the number corresponding to each parameter name indicates where to find the description of that parameter.


```
cond  1            error_limit  4     time_window  3

depth  9           inst  5           xinst  6

duration  2        subckt  7         xsubckt  8
```


© 2003-2020 All Rights Reserved.

Dynamic DC Leakage Path Check (dyn_dcpath)

Description

Reports conductance paths between user-specified nets. This check can be used in two ways. One is based on transient-analysis and other is based on leakage-analysis.

Note: Both the approaches cannot be combined in a single check statement. If you specify both approaches in one check statement, the leakage analysis gets higher priority than transient analysis.

Transient based approach:

The check based on transient-analysis reports a qualifying path carrying an absolute current higher than the current threshold (`ith`) and for a time longer than the user-specified duration (`duration`), within the user-specified `time_window`.

Leakage-analysis based approach:

The check based on leakage-analysis is evoked when parameter, `leaki_times`, is specified. `leaki_times` should be carefully selected in standby or power-down mode. The check is performed at specified times (`leaki_times`) of a transient simulation. The check based on leakage-analysis reports a qualifying paths carrying an absolute current higher than the parameter `ith` (current threshold) at user-specified time points (`leaki_times`).

If more than two nets are specified, Spectre checks the conducting path between each pair of nodes. For example, if `net=[vdc1 vdc2 0]` is specified, then the conducting path between vdc1 and vdc2, vdc1 and 0, and vdc2 and 0 is checked.

Higher accuracy settings are recommended when using the XPS solver:

```
+cktpreset=sram_pwr
```

The results are written to the dynamic.xml file, which can be viewed in a Web browser.

For additional information, refer to the *Dynamic DC Leakage Current Path Check* section in the *Spectre Classic Simulator, Spectre APS, Spectre X, and Spectre XPS User Guide*.

Definition

```
Name dyn_dcpath parameter=value ...
```


© 2003-2020 All Rights Reserved.

Parameters

Design check parameters

1	`net="[...]"`	The leakage path between the voltage source nets is checked. `net` defines a set of nodes and not a pair. For example, `net = [vdd vdd1 0]` checks the leakage path between vdd and vdd1, vdd and 0, and vdd1 and 0.
2	`ith=5.00E-05 A`	The leakage path with the absolute current higher than the threshold value is reported. Default is `5.00E-05 A`.
3	`duration=5.00E-09 sec`	Duration threshold. Default is `5.00E-09 sec`.
4	`sort=no`	If set to `no`, sorting is not performed. If set to current, dyn_dcpath will sort violations by max current. Default is `no`. Possible values are `no` and `current`.

Filtering parameters

5	`time_window=[tstart, tstop] sec`	The time window during which the circuit check is applied. Multiple non-overlapping time windows are supported. Default time window is `0` to `tend`.
6	`leaki_times=[...] sec`	Time point(s) at which dynamic dcpath check is performed. This parameter is supported only in XPS.
7	`error_limit=10000`	Maximum number of errors reported. Default is `10000`.
8	`xinst`	Subckt instances to be excluded from the check. Default is `none`. **Note:** This parameter is supported only in XPS.

Parameter Index

In the following index, the number corresponding to each parameter name indicates where to find the description of that parameter.

© 2003-2020 All Rights Reserved.

duration 3	ith 2	net 1	time_window 5
error_limit 7	leaki_times 6	sort 4	xinst 8

© 2003-2020
All Rights Reserved.

Dynamic Delay Check (dyn_delay)

Description

Checks timing delays between two signals and reports nodes with edge delay errors.

The delay is measured between user-specified node(s) and a reference node. A timing delay error occurs when the transition time of a signal falls outside the range of `refTime + min_time` and `refTime + max_time`, where `refTime` is the transition time of the reference signal. In other words, a timing delay error occurs when the delay between the signal and reference signal is outside the range of `min_time` and `max_time`.

The `ref_vhth` and `vhth` parameters are used for triggering rising edge measurements, while `ref_vlth` and `vlth` are used for triggering falling edge measurements. For example, a delay measurement from a rising reference signal to a falling signal includes the measurement of the delay from the time the reference signal crosses `ref_vhth` to the time the signal crosses `vlth`.

If the `subckt` parameter is specified, then `node` and `ref_node` are considered as local nodes to the specified subcircuit. In other words, `node` and `ref_node` belong to the instances of the specified subcircuit. Only one `subckt` value must be specified per check, with no wildcard.

If the `subckt` parameter is not specified then `node` and `ref_node` are considered as global nodes with hierarchical names starting from the top level.

The results are written to the `dynamic.xml` file, which can be viewed in a Web browser. This check is supported only in XPS.

For additional information, refer to the *Dynamic Delay Check* section in the *Spectre Classic Simulator, Spectre APS, Spectre X, and Spectre XPS User Guide*.

Definition

```
Name dyn_delay parameter=value ...
```

Parameters

© 2003-2020 All Rights Reserved.

Design check parameters

1	`node="[...]"`	Nodes to which the check is applied.
2	`ref_node`	Name of the referenced node.
3	`min_time=0.0 sec`	Minimum delay between the signal and the reference signal transition.
4	`max_time=0.0 sec`	Maximum delay between the signal and the reference signal transition.
5	`edge=rise`	Edge type of the signal net. Default is rise. Possible values are `rise`, `fall`, and `both`.
6	`ref_edge=rise`	Edge type of the reference signal. Default is rise. Possible values are `rise`, `fall`, and `both`.

Digitize parameters

7	`vlth=0.2 V`	Low voltage threshold for the signal net.
8	`ref_vlth=0.2 V`	Low voltage threshold for the referenced net.
9	`vhth=0.8 V`	High voltage threshold for the signal net.
10	`ref_vhth=0.8 V`	High voltage threshold for the referenced net.

Filtering parameters

11	`time_window=[tstart, tstop] sec` Time window to which the circuit check is applied. Multiple non-overlapping time windows are supported. Default time window is 0 to `tend`.	
12	`error_limit=10000`	Maximum number of errors reported. Default is 10000.

© 2003-2020 All Rights Reserved.

Wildcard scoping

13	`subckt=[...]`	Instances of the specified subcircuit to which the check is applied. Default iis none.

Parameter Index

In the following index, the number corresponding to each parameter name indicates where to find the description of that parameter.

`edge 5` `node 1` `ref_vlth 8` `error_limit 12`

`ref_edge 6` `vhth 9` `max_time 4` `ref_node 2`

`subckt 13` `vlth 7` `min_time 3` `ref_vhth 10`

`time_window 11`

© 2003-2020 All Rights Reserved.

Dynamic Diode Voltage Check (dyn_diodev)

Description

Reports diode elements fulfilling the conditional expression on element voltages for a time longer than a user-specified duration threshold.

Supported diode variables: `v(a,c)`, `v(a)`, `v(c)`

Supported operators: +, -,*, /, ==,!=, <, <=, >, >=,||, &&, and !

The results are reported into a file with the extension dynamic.xml, which can be read with a web browser. This check is supported only by Spectre XPS. For Spectre and Spectre APS use the `assert` statement.

For additional information, refer to the *Dynamic Diode Voltage Check* section in the *Spectre Classic Simulator, Spectre APS, Spectre X, and Spectre XPS User Guide*.

Definition

```
Name dyn_diodev parameter=value ...
```

Parameters

Design check parameters

1	`cond`	The conditional expression to be fulfilled. Default is none.
2	`duration=5.00E-09 sec`	Duration threshold. Default is `5.00E-09` sec.
3	`model=[...]`	Diode device model names to be checked.

Filtering parameters

4	`time_window=[tstart, tstop] sec`	

© 2003-2020 All Rights Reserved.

		Time window to which the circuit check is applied. Multiple non-overlapping time windows are supported. Default time window is `0` to `tend`.
5	`error_limit=10000`	Maximum number of errors reported. Default is `10000`.

Wildcard scoping parameters

6	`inst=[...]`	Subcircuit instances to which the check is applied. Default includes all instances (`inst=*`).
7	`xinst=[...]`	Subcircuit instances to be excluded from the check. Default is `none`.
8	`subckt=[...]`	The instances of the specified subcircuit to which the check is applied. Default includes all subcircuits (`subckt=*`).
9	`xsubckt=[...]`	The instances of the specified subcircuits that are excluded from the check. Default is `none`.
10	`depth=8`	Hierarchy levels (starting from top, instance, or subcircuit scope) to be checked. Default is `8`.

Parameter Index

In the following index, the number corresponding to each parameter name indicates where to find the description of that parameter.


```
cond  1            error_limit  5     subckt  8          xsubckt  9

depth  10          inst  6            time_window  4

duration  2        model  3           xinst  7
```


© 2003-2020 All Rights Reserved.

Dynamic Excessive Element Current Check (dyn_exi)

Description

Reports elements and devices carrying currents (absolute value) higher than the current threshold (`ith`) for a time longer than the duration threshold (`duration`).

The results are written to the dynamic.xml file, which can be viewed in a Web browser.

For additional information, refer to the *Dynamic Excessive Element Current Check* section in the *Spectre Classic Simulator, Spectre APS, Spectre X, and Spectre XPS User Guide*.

Definition

```
Name dyn_exi parameter=value ...
```

Parameters

Design check parameters

1	`dev="[...]"`	The instance names of device or elements to be checked.
2	`ith (ampere)`	Current threshold. Default is `none`.
3	`duration=5.00E-09 sec`	Duration threshold. Default is `5.00E-09 sec`.

Filtering parameters

4	`time_window=[tstart, tstop] sec`	The time window during which the circuit check is applied. Multiple non-overlapping time windows are supported. Default time window is `0` to `tend`.
5	`error_limit=10000`	Maximum number of errors reported. Default is `10000`.

© 2003-2020 All Rights Reserved.

Wildcard scoping

6	`inst=[...]`	Subcircuit instances to which the check is applied. Default includes all instances (`inst=*`).
7	`xinst=[...]`	Subcircuit instances to be excluded from the check. Default is `none`.
8	`subckt=[...]`	The instances of the specified subcircuit to which the check is applied. Default includes all subcircuits (`subckt=*`).
9	`xsubckt=[...]`	The instances of the specified subcircuits that are excluded from the check. Default is `none`.
10	`depth=8`	Hierarchy levels (starting from top, instance, or subcircuit scope) to be checked. Default is `8`.

Parameter Index

In the following index, the number corresponding to each parameter name indicates where to find the description of that parameter.


```
depth  10          error_limit  5     subckt  8          xsubckt  9

dev  1             inst  6            time_window  4

duration  3        ith  2             xinst  7
```


© 2003-2020 All Rights Reserved.

Dynamic Excessive Rise, Fall, Undefined State Time Check (dyn_exrf)

Description

Reports the nodes with excessive rise times, fall times, or with an undefined state. The rise and fall times are measured between low (vlth) and high (vhth) voltage thresholds. The duration longer than the user-specified rise and fall time threshold are reported. Undefined states are defined by node voltages between low and high voltage threshold and are reported when their duration is longer than the undefined time threshold (utime).

The results are written to the dynamic.xml file, which can be viewed in a Web browser.

For additional information, refer to the *Dynamic Capacitor Voltage Check* section in the *Spectre Classic Simulator, Spectre APS, Spectre X, and Spectre XPS User Guide*.

Definition

```
Name dyn_exrf parameter=value ...
```

Parameters

Design check parameters

1	`n8ode="[...]"`	Nodes to which the check is applied. Default is all (`node=*`).
2	`rise (sec)`	Risetimes longer than the specified value are reported. Default is `none`.
3	`fall (sec)`	Falltimes longer than the specified value are reported. Default is `none`.
4	`utime (sec)`	The undefined time threshold. An undefined state is defined by node voltages between the low and high voltage thresholds.

© 2003-2020 All Rights Reserved.

5	`fanout=all`	Fanout setting to filter node with specified connection. When fanout=gate_no_moscap, gates connecting only to MOSCAPs will not be checked. This option is supported only in Spectre XPS. Possible values are `all`, `gate`, `bulk` `gate_has_driver_no_moscap`, and `gate_no_moscap`.
6	`filter=no`	If set to `no`, filtering is not performed. If set to `rc`, `dyn_exrf` checker will report only one node in same parasitic sub. This option is supported only in XPS. Possible values are `no` and `rc`.
7	`inverse=no`	If set to `no`, reports risetimes and falltimes longer than the specified value. If set to `yes`, reports `risetimes` and `falltimes` shorter than the specified value. This option is supported only in XPS. Default is `no`. Possible values are `no` and `yes`.
8	`sort=no`	If set to `no`, sorting is not performed. If set to `duration`, `dyn_exrf` will sort violations by duration. Default is `no`. Possible values are `no` and `duration`.

Digitize parameters

9	`vlth (V)`	Low voltage threshold for rise, fall, and utime measurements. Default is `none`.
10	`vhth (V)`	High voltage threshold for rise, fall, and utime measurements. Default is `none`.

Filtering parameters

11	`time_window=[tstart, tstop] sec`	The time window during which the circuit check is applied. Multiple non-overlapping time windows are supported. Default time window is `0` to `tend`.
12	`error_limit=10000`	Maximum number of errors reported. Default is `10000`.

© 2003-2020 All Rights Reserved.

Wildcard scoping

13	`inst=[...]`	Subcircuit instances to which the check is applied. Default includes all instances (`inst=*`).
14	`xinst=[...]`	Subcircuit instances to be excluded from the check. Default is `none`.
15	`subckt=[...]`	The instances of the specified subcircuit to which the check is applied. Default includes all subcircuits (`subckt=*`).
16	`xsubckt=[...]`	The instances of the specified subcircuits that are excluded from the check. Default is `none`.
17	`depth=8`	Hierarchy levels (starting from top, instance, or subcircuit scope) to be checked. Default is `8`.

Parameter Index

In the following index, the number corresponding to each parameter name indicates where to find the description of that parameter.

depth 17	inst 13	subckt 15	xinst 14
error_limit 12	inverse 7	time_window 11	xsubckt 16
fall 3	node 1	utime 4	
fanout 5	rise 2	vhth 10	
filter 6	sort 8	vlth 9	

© 2003-2020 All Rights Reserved.

Dynamic Floating Node Induced DC Leakage Path Check (dyn_floatdcpath)

Description

Reports the DC leakage paths that are caused by floating gate.

This check can be used in two ways. One is based on transient analysis and other is based on leakage analysis. Both approaches cannot be combined in one check statement. If you specify both approaches in one check statement, then leakage analysis gets higher priority than transient analysis.

Transient based approach:

The check based on transient analysis is evoked when parameters `time_window` or/and `duration` are specified. It reports the qualifying path carrying an absolute current higher than the parameter `ith` for a duration longer than the specified `duration`, within the specified `time_window`. This qualifying path must also have a MOSFET with gate floating for duration longer than the specified `duration`, within the specified `time_window`. The violations will be the union of `dyn_highz` and `dyn_dcpath`, if same settings are used. This methodology does not give the worst case leakage path. If the settings of `dyn_dcpath` and `dyn_floatdcpath` are same, then the violations of `dyn_floatdcpath` will be a subset of `dyn_dcpath`. The following parameters are irrelevant: `Vmin`, `vmax`, `points`, `rforce`, `leaki_times`, `sweep`, `floatgate`, `detailed_report`, `debug_net`, `distribute`, `numprocesses`. The floating node detection is similar to `dyn_highz`. The path detection is similar to `dyn_dcpath`.

Leakage analysis based approach:

The check based on leakage-analysis is evoked when parameter, `leaki_times`, is specified. `leaki_times` should be carefully selected in standby or power-down mode.

The check is performed at specified times (`leaki_times`) of a transient simulation. Floating nodes and MOSFET devices with floating gates are detected. Potential leakage paths (`sweep=no`) or worst leakage paths (`sweep=all,single,all_once`) caused by floating gate MOSFET devices are reported.The leakage paths are checked between user-specified power supply nodes (net). The floating node detection and path detection, in Leakage analysis based approach, are explained below:

Floating node detection (leaki_times)

© 2003-2020 All Rights Reserved.

A node is considered floating (or in high impedance state) if it has no conducting path to a power supply or ground. A report of all MOSFETs with floating gates can be printed using the `floatgate` parameter. The following device conducting rules are used for the floating node detection:

- MOSFET is conducting if MOS region is either triode or saturation

  - Resistors, controlled resistors, phy_res, relay, and inductors are conducting if R<=res_th

  - BJT is conducting if Vbe>bjt_vbe OR Ic>bjt_ith

  - Diode is conducting if V>diode_vth

  - Vsources and iprobes are considered conducting

  - Isources, VCCS, and CCCS are conducting if i>isource_ith

  - JFET is considered conducting

  - Mutual inductors and controlled capacitors are not conducting

  - VerilogA: conducting path depends on module details

Path detection (leaki_times)

Once the floating nodes are identified, the leakage paths caused by the floating nodes need to be detected. You can use the current-based method or conducting-rule-based method to detect the leakage path. These two methods are explained below:

- When the `sweep` parameter is set to `single`, `all`, or `all_once`, the leakage path detection is current-based. In the current-based path detection method, floating node voltage is swept, and the current in the path is measured. After the measurement, the current-based method reports qualifying paths carrying an absolute current higher than the `ith` parameter. Either all floating nodes are swept at once (`sweep=all`), or each floating node is swept individually (`sweep=single`).

  The following parameters are relevant to current-based path detection method:

  vmin, vmax, points, rforce, and ith.

- When the `sweep` parameter is set to `no`, the leakage path detection is based on following conducting rules:

  - MOSFET with floating gate is always considered conducting.

  - Resistors, controlled resistors, and inductors are conducting if R<=res_th

© 2003-2020 All Rights Reserved.

- BJT is conducting if Vbe>bjt_vbe OR Ic>bjt_ith

- Diode is conducting if V>diode_vth

- Vsources is conducting if V=0 otherwise it is not conducting

- iprobes are considered conducting

- Isources, VCCS, and CCCS are conducting if i>isource_ith

- VerilogA: conducting path depends on module details

The following parameters are irrelevant with `sweep=no`:

Vmin, vmax, points, rforce, and ith.

If more than two nets are specified, Spectre checks the leakage path between each pair of nets. For example, if `net=[vdc1 vdc2 0]` is specified, then the conducting path between `vdc1` and `vdc2`, vdc1 and `0`, and `vdc2` and `0` is checked.

Higher accuracy settings are recommended when using the Spectre XPS solver: `+cktpreset=sram_pwr`.

The results are written to the dynamic.xml file, which can be viewed in a Web browser.

For additional information, refer to the *Dynamic Floating Gate Induced Leakage Check* section in the *Spectre Classic Simulator, Spectre APS, Spectre X, and Spectre XPS User Guide*.

Definition

```
Name dyn_floatdcpath parameter=value ...
```


© 2003-2020 All Rights Reserved.

Parameters

Design check parameters

1	`leaki_times=[...] sec`	Time point(s) at which check is performed.
2	`duration=5.00E-09 sec`	Duration threshold. Default is `5.00E-09 sec`. **Note:** This option is supported only in Spectre and APS.
3	`time_window=[tstart, tstop] sec`	Time window during which the circuit check is applied. Multiple non-overlapping time windows are supported. Default time window is `0 to tend`. **Note:** This option is supported only in Spectre and APS.
4	`error_limit=10000`	Maximum number of errors reported. Default is `10000`.

Floating node detection parameters

5	`bjt_vbe=0.4`	BJT vbe conducting threshold for floating node detection. Default is `0.4 V`.
6	`bjt_ith=50E-9`	BJT ic conducting threshold for floating node detection. Default is `50 nA`.
7	`res_th_va=10E6`	Verilog-A resistor conducting threshold for high impedance node detection. Only applicable on AMS IE element and on one or two port AHDL module. Default is 10MOhms.
8	`res_th=1E12`	Resistor conducting threshold for floating node detection. Default is `1 TOhm`.
9	`diode_vth=0.6`	Diode voltage conducting threshold for high impedance node detection. Default is `0.6V`.
10	`isource_ith=1.0E-12`	Current source conducting threshold for floating node detection. Default is `1 pA`.

© 2003-2020 All Rights Reserved.

11	`debug_net=[...]`	Hierarchical net(s) to debug. Wildcard is not allowed. Default is `none`. The debug report will be generated at `leaki_times`.
12	`nonconducting_subckt`	All instances of the specified subcircuit or Verilog-A modules are considered non-conducting during floating node detection. All devices inside the subcircuit, and all branches inside the Verilog-A module are also considered non-conducting during floating node detection. Wildcard is supported. Default is `none`.
13	`conducting_subckt=[...]`	All instances of specified subcircuit or VerilogA modules are considered non-conducting during the floating node detection. All devices inside the subcircuit, and all branches inside the VerilogA module are considered non-conducting during the floating node detection. Wildcard is supported. Default is `none`.
14	`float_vpn=[...]`	All channel connections of specified vpn(s) will be marked as floating nodes during floating node detection. Wildcard is not allowed. Default is `none`. This option is supported only in Spectre XPS FastSPICE mode.

© 2003-2020 All Rights Reserved.

Floating node detection filtering parameters

15	`floatgate=no`	Whether to report all MOSFETs with floating gate at `leaki_times`. When floatgate=gate_has_driver_no_moscap, floating MOSCAPs will not be reported. Possible values are `no`, `yes`, and `gate_has_driver_no_moscap`. Default is `no`.
16	`filter=no`	If set to `no`, filtering is not performed. If set to `rc`, dyn_floatdcpath will check only one node in same parasitic sub. This option is supported only in XPS. Possible values are `no` and `rc`.
17	`filter_diocon_nodes=0`	Filter out highz nodes connected to MOSDIODE. When set to 1, highz node that is connected to PMOSDIODE is filtered out given that its source is connected to VDD. A highz node tat is connected to NMOSDIODE is filtered out given that its source is connected to 0. When set to 2, highz node that is connected to PMOSDIODE is filtered out given that its source voltage is greater than drain voltage. A highz node that is connected to NMOSDIODE is filter out given that its drain voltage is greater than source voltage. This option is supported only in Spectre and APS. Possible values are `0`, `1` and `2`.
18	`node`	Nodes to which floating node detection is applied. Default is all (`node=*`). This parameter is not supported in XPS FastSpice mode.
19	`xnode="[...]"`	Nodes to which be excluded from the floating node detection. Default is `none`.
20	`inst`	Subcircuit instances to which floating node detection is applied. Default includes all subcircuits (`subckt=*`). This parameter is not supported in XPS FastSpice mode.
21	`xinst`	Subcircuit instances to be excluded from floating node detection. Default is none. This parameter is not supported in XPS FastSpice mode.
22	`subckt`	Instances of the specified subcircuit to which floating node detection is applied. Default includes all subcircuits (`subckt=*`). This parameter is not supported in XPS FastSpice mode.

© 2003-2020 All Rights Reserved.

23	`xsubckt`	Instances of the specified subcircuit to be excluded from floating node detection. Default is none. This parameter is not supported in XPS FastSpice mode.

© 2003-2020 All Rights Reserved.

Path detection parameters

24	`net="[...]"`	Hierarchical node names between which the leakage path is checked. Wildcarding is not allowed.
25	`sweep=all`	If set to no, then no DC sweep is performed and leakage path is based on conducting rules. If set to single, then each floating node is swept one at a time and leakage paths more than `ith` are reported. If set to `all`, then all floating nodes will be swept together and leakage paths more than `ith` are reported. If set to all_once, voltage of gates connected to nmos will be VDD, voltage of gates connected to pmos will be 0, voltage of gates connected to both nmos and pmos will be VDD/2, and leakage paths more than `ith` are reported. The default is `all` in Spectre and APS, and the default is `no` in XPS. The option `all_once` is supported only in XPS. The option `single` in not supported in XPS. The option `single` is not supported in XPS. Possible values are `no`, `all`, `single`, and `all_once`.
26	`ith=50E-6`	Leakage path more than `ith` will be reported. Applicable only with sweep=single, sweep=all, and sweep=all_once. The default value is 50uA.
27	`points=3`	Defines the number of sweep points; applicable to both `sweep=single` and `sweep=all`.
28	`vmin=0`	Defines a minimum voltage for `sweep=single` and `single=all`. If specified, the voltage sweep will start from specified `vmin` voltage. If not specified, minimum voltage in a design will be used. Default is none.
29	`vmax=0`	Defines a maximum voltage for `sweep=single` and `single=all`. If specified, the voltage sweep will stop at specified `vmax` voltage. If not specified, maximum voltage in a design will be used. Default is none.
30	`rforce=500E06`	Change the rforce value only for `sweep=single` and `sweep=all`. The default value is `500 MOhm`.
31	`numprocesses=0`	Number of processes for distributed analysis.
32	`distribute=no`	Distribute method, only support sweep=single. Possible values are `no` and `fork`.

© 2003-2020 All Rights Reserved.

Path detection filtering parameters

33	`detailed_path=per_fm`	If set to `yes`, prints the detailed path. Default is `per_fm`, which prints one path per floating mosfet. If set to `per_fn`, print one path per floating node. The `per_fn` value is not supported in Spectre XPS. Possible values are `per_fm`, `yes`, and `per_fn`.
34	`sort=no`	If set to `no`, sorting is not performed. If set to `current`, dyn_floatdcpath will sort violations by max current. Default is `no`.

Parameter Index

In the following index, the number corresponding to each parameter name indicates where to find the description of that parameter.

bjt_ith 6	filter 16	node 18	sweep 25
bjt_vbe 5	filter_diocon_nodes 17	nonconducting_subckt 12	time_window 3
conducting_subckt 13	float_vpn 14	numprocesses 31	vmax 29
debug_net 11	floatgate 15	points 27	vmin 28
detailed_path 33	inst 20	res_th 8	xinst 21
diode_vth 9	isource_ith 10	res_th_va 7	xnode 19
distribute 32	ith 26	rforce 30	xsubckt 23
duration 2	leaki_times 1	sort 34	
error_limit 4	net 24	subckt 22	

© 2003-2020 All Rights Reserved.

Dynamic Floating Node Statistical Check (dyn_float_tran_stat)

Description

The `dyn_float_tran_stat` check reports leaky MOSFETs/BJTs caused by floating nodes. It also detects floating nodes caused by other floating nodes.

The check deploys a statistical method of forcing (pinging) different voltages on the gate of MOSFET and the base of BJT. Ping refers to randomly forcing a node to 0 or VDD, or ramping from 0 to VDD. Only MOSFET gates or BJT base nodes are pinged. Ping is realized by applying a voltage source in series with a large resistor (ping_resistor) on each node. The strength of a ping is weaker (because of large ping_resistor) than other drivers on each node.

dyn_float_tran_stat Algorithm

- Transient simulation is run till ping_start.
- Qualified nodes are identified to exercise pings according to domains.
- For each qualified node, domain_voltage is evaluated.
- Pings are created randomly using seed value. One third of the qualified nodes are selected for HIGH. One third of qualified nodes are selected for LOW. One third of qualified nodes are selected for RAMP.
- ping_duration and ping_resistor are evaluated
- Pings are applied sequentially at ping_start.
- For each ping:
  - All MOSFET drain currents and BJT collector currents are stored as reference current (Iref) right before applying the ping

    For the first half of ping_duration:

    - HIGH/LOW to each node is forced through a resistor with ping_resistor value.
    - Device current (Iping) is checked at 0.95 of 0.5*ping_duration. A fail is detected if:

      |Iref-Iping| > max(pingibsthresh, pingirelthresh * min(|Iref|,|Iping|))
- For the second half of ping_duration:

© 2003-2020 All Rights Reserved.

The RAMP is forced to each node through a resistor with the ping_resistor value and the maximum (Iping,max) and minimum (Iping,min) device current is checked during the RAMP. A fail is detected in any of the following cases:

|Iref-Iping,max| > max(pingiabsthresh_ramp, pingirelthresh*min(|Iref|,|Iping,max|))

|Iref-Iping,min| > max(pingiabsthresh_ramp, pingirelthresh*min(|Iref|,|Iping,min|))

The results are written to the `dynamic.xml` file, which can be viewed in a Web browser. This design check is supported only in Spectre and Spectre APS modes. It is not supported in Spectre XPS FastSPICE, Spectre XPS SPICE, and Spectre XPS MS modes.

Definition

```
Name dyn_float_tran_stat parameter=value ...
```


© 2003-2020 All Rights Reserved.

Parameters

Design check parameters

1	`domains="[...]"`	Pairs of power supply domains in which floating nodes are checked. Example: domains=[VDD VSS VPP VSS]. Domain also defines domain voltage (domain_voltage) value for forcing node voltages. Wildcarding is not allowed. Default is none.
2	`ping_start="[...]"`	Time at which the check is initiated.
3	`ping_count=300`	Number of statistical periods being used. Default is 300.
4	`ping_duration`	Duration of a ping. A ping consists of two phases: high/low forcing phase and ramp up forcing phase. Length of each phase is half of ping_duration. Default is none.
5	`ping_ibias=1`	Lowest bias current in the design. It is recommended to set this parameter to 10% of bias current in the design. Default is none. If specified, then ping_resistor is evaluated to be equal to domain_voltage/ping_ibias.
6	`ping_iabsthresh=1`	Current threshold for floating node detection during high/low forcing. Default is domain_voltage/ping_resistor.
7	`ping_iabsthresh_ramp=1`	Current threshold for floating node detection during ramp forcing. Default is 100*domain_voltage/ping_resistor.
8	`ping_irelthresh=1000`	Relative threshold for floating node detection for both high/low and ramp forcing. Default is 1000.
9	`seed=3`	Seed for random number generation.
10	`domain_voltage_thresh=0.0`	

© 2003-2020 All Rights Reserved.

		Lowest threshold for domain voltage. If a node has voltage less than `domain_voltage_thresh`, it will be excluded from ping. Default is 0.0.
11	`save=no`	To probe gate voltage of MOSFETs, base voltage of BJTs, drain current of MOSFETs and collector current of BJTs. When value is set to ping or all, a new waveform file will be written in raw directory. The format of this new waveform file will be <CheckName>_<PingStart>.tran.tran, where <CheckName> is the name of check statement and <PingStart> is the time specified in `ping_start` parameter. The waveform will start from PingStart until ping simulation is finished. If `save=ping`, only save ping voltages and mos/bjt currents. If `save=all`, both of signals in the `save=ping` and the ones saved in the netlist are saved. Default is `no`. `Possible values are ping`, `no` and `all`.
12	`distribute=no`	Distribute method. Possible values are `no` and `fork`.
13	`numprocesses=0`	Number of processes for distributed analysis.
14	`report_top_current=0`	Number of top n devices with the largest leakage current to be reported.When set to 0,report will contain all devices.
15	`ping_duration_max=0`	Maximum value of ping_duration applied. Default is none.
16	`ping_resistor_max=10e+9`	Maximum value of ping_resistor applied. Default is 10G.
17	`ping_resistor_min=100e+6`	Minimum value of ping_resistor applied. Default is 100M.
18	`time_constant=6`	Time constant. Default is 6.0.

© 2003-2020 All Rights Reserved.

19 `omain_detection_method=dev`

Domain detection, find the ping nodes through device or node.
Possible values are `dev` and `node`.

20 `inst=[...]` Subcircuit instances to which the check is applied. Default includes all instances (inst=*).

21 `xinst=[...]` Subcircuit instances to be excluded from the check. Default is none.

22 `subckt=[...]` The instances of the specified subcircuit to which the check is applied. Default includes all subcircuits (subckt=*).

23 `xsubckt=[...]` The instances of the specified subcircuits that are excluded from the check. Default is none.

24 `node=[...]` Nodes to which the check is applied. Default is none.

25 `xnode=[...]` Nodes to be excluded from the check. Default is none.

26 `ping_voltage_thresh=0` Threshold for ping voltage.

27 `ping_index=[...]` Selectively re-ping a circuit with a list of pings.

28 `domain_detection_voltage_atol=1e-20`

Voltage tolerance for voltage-based domain detection.

Parameter Index

In the following index, the number corresponding to each parameter name indicates where to find the description of that parameter.


```
distribute  12      numprocesses  13    ping_index  27      save  11

domain_detection_   ping_count  3       ping_irelthresh     seed  9
method  19                              8

domain_detection_   ping_duration  4    ping_resistor_max   subckt  22
voltage_atol  28                         16
```


© 2003-2020 All Rights Reserved.

domain_voltage_thresh 10
ping_duration_max 15
ping_resistor_min 17
time_constant 18
domains 1
ping_iabsthresh 6
ping_start 2
xinst 21
inst 20
ping_iabsthresh_ramp 7
ping_voltage_thresh 26
xnode 25
node 24
ping_ibias 5
report_top_current 14
xsubckt 23

© 2003-2020
All Rights Reserved.

Dynamic Glitch Check (dyn_glitch)

Description

A 'Glitch' occurs when:

- A low signal goes above the mid-level, and crosses the mid-level again within the user-defined duration.

- A high signal goes below the mid-level, and crosses the mid-level again within the user-defined duration.

This check applies only to blocks with single and constant power supply.

The results are written to the dynamic.xml file, which can be viewed in a Web browser.

For additional information, refer to the *Dynamic Glitch Check* section in the *Spectre Classic Simulator, Spectre APS, Spectre X, and Spectre XPS User Guide*.

Definition

```
Name dyn_glitch parameter=value ...
```

Parameters

Design check parameters

1	`node="[...]"`	Nodes to which the check is applied. Default is `none`.
2	`duration=5.00E-09 sec`	Duration threshold. Default is `5.00E-09 sec`.
3	`min_duration=0 sec`	Minimum glitch duration threshold. Default is `0 sec`.
4	`max_duration=5.00E-09 sec`	Maximum glitch duration threshold. Default is `5.00E-09 sec`.
5	`low=0 volt`	Low-level voltage. Default is `0`V.

© 2003-2020 All Rights Reserved.

6	`high (volt)`	High-level voltage. Default is `none`.
7	`mid=0.5 (high + low) volt`	Mid-level voltage for glitch detection. Default is `0.5*(high+ low)`.

Filtering parameters

8	`time_window=[tstart, tstop] sec`	The time window during which the circuit check is applied. Multiple non-overlapping time windows are supported. Default time window is `0` to `tend`.
9	`error_limit=10000`	Maximum number of errors reported. Default is `10000`.
10	`fanout=all`	Fanout setting to filter node with specified connection. This option is supported only in Spectre XPS. Possible values are `all`, `gate`, and `bulk`.

Wildcard scoping

11	`inst=[...]`	Subcircuit instances to which the check is applied. Default includes all instances (`inst=*`).
12	`xinst=[...]`	Subcircuit instances to be excluded from the check. Default is `none`.
13	`subckt=[...]`	The instances of the specified subcircuit to which the check is applied. Default includes all subcircuits (`subckt=*`).
14	`xsubckt=[...]`	The instances of the specified subcircuits that are excluded from the check. Default is `none`.
15	`depth=8`	Hierarchy levels (starting from top, instance, or subcircuit scope) to be checked. Default is `8`.

© 2003-2020 All Rights Reserved.

Parameter Index

In the following index, the number corresponding to each parameter name indicates where to find the description of that parameter.

depth 15	high 6	mid 7	time_window 8
duration 2	inst 11	min_duration 3	xinst 12
error_limit 9	low 5	node 1	xsubckt 14
fanout 10	max_duration 4	subckt 13	

© 2003-2020 All Rights Reserved.

Dynamic HighZ Node Check (dyn_highz)

Description

Reports the nodes that are in high impedance state for a duration longer than the user-defined threshold. A high impedance state is reached when there is no conducting path from the node to any power supply or ground. The following device conducting rules are used for the floating node detection:

- MOSFET is conducting if MOS region is either triode or saturation
- Resistors, controlled resistors, phy_res, relay, and inductors are conducting if R<=res_th
- BJT is conducting if Vbe>bjt_vbe or Ic>bjt_ith
- Diode is conducting if V>diode_vth
- Vsources and iprobes are considered conducting
- Isources, VCCS, and CCCS are conducting if i>isource_ith
- JFET is considered conducting
- Mutual inductors and controlled capacitors are not conducting
- VerilogA: conducting path depends on module details

The results are written to the dynamic.xml file, which can be viewed in a Web browser.

For additional information, refer to the *Dynamic High Impedance Node Check* section in the *Spectre Classic Simulator, Spectre APS, Spectre X, and Spectre XPS User Guide*.

Definition

```
Name dyn_highz parameter=value ...
```

Parameters

Design check parameters

1	`node="[...]"`	Nodes to which the check is applied. Default is `none`.

© 2003-2020 All Rights Reserved.

2	`xnode="[...]"`	Nodes to be excluded from the check. Default is none.
3	`xnode_file=[...]`	Nodes to be excluded from the check, defined in file, wildcard is not supported. Default is none.
4	`duration=5.00E-09 sec`	Duration threshold. Default is `5.00E-09 sec`.
5	`bjt_vbe=0.4`	BJT vbe conducting threshold for high impedance node detection. Default is `0.4 V`.
6	`bjt_ith=50E-9`	BJT ic conducting threshold for high impedance node detection. Default is `50 nA`.
7	`res_th_va=10E6`	VerilogA resistor conducting threshold for high impedance node detection. Only applicable on AMS IE element and on one or two port AHDL module. Default is 10MOhms.
8	`res_th=1E12`	Resistor conducting threshold for high impedance node detection. Default is `1 TOhms`.
9	`diode_vth=0.6`	Diode voltage conducting threshold for high impedance node detection. Default is `0.6 V`.
10	`isource_ith=1.0E-12`	Current source conducting threshold for high impedance node detection. Default is `1 pA`.
11	`inverse=no`	If set to no, reports all nodes that are in highz sate. If set to yes, reports all nodes not being in highz state. Default is no. Possible values are `no` and `yes`.
12	`sort=no`	If set to no, sorting is not performed. If set to duration, dyn_highz will sort violations by duration. Default is no. Possible values are `no` and `duration`.
13	`debug_net=[...]`	Hierarchical net(s) to debug. Wildcard is not allowed. Default is none.
14	`debug_time=[...]`	Time point(s) at which debug report will be generated. Default is none.

© 2003-2020 All Rights Reserved.

15	debug_format=txt	When `debug_format=txt`, the report will be written into a file, <*`netlistName`*>_<*`checkName`*>_<*`debug_time`*>`.report.log`, in `txt` format. When `debug_format=sql`, report will be written in `xml`/`sql` format. When `debug_format=both`, report will be written in all formats. Possible values are `sql`, `txt`, and `both`.
16	`debug_report=lowz`	When debug_report = lowz, only lowz nodes are reported and the report will contain all conducting paths from a debug_net to ground causing debug_net to be lowz node. When debug_report = highz, only highz nodes are reported and report will contain all devices that are off causing a debug_net to be highz. This highz report is only supported in text format(debug_format=txt). When debug_report = both, both lowz and highz node are reported. Possible values are `lowz`, `high`, and `both`.

Filtering parameters

17	`time_window=[tstart, tstop] sec`	Time window to which the circuit check is applied. Multiple non-overlapping time windows are supported. Default time window is 0 to tend.
18	`error_limit=10000`	Maximum number of errors reported. Default is 10000.
19	`fanout=all`	Fanout setting to filter node with specified connection. When fanout=gate_has_driver_no_moscap, floating nodes only connecting to MOSCAPs will not be checked. When fanout=gate_no_moscap, gates only connecting to MOSCAPs will not be checked. Possible values are `all`, `gate`, `bulk`, `gate_has_driver_no_moscap`, and `gate_no_moscap`.

© 2003-2020 All Rights Reserved.

20	`filter=no`	If set to no, filtering is not performed. If set to rc, dyn_highz checker will report only one node in same parasitic sub. This option is supported only in XPS. Possible values are `no` and `rc`.
21	`filter_diocon_nodes=0`	Filter out highz nodes connected to MOSDIODE. When set to 1, highz node that is connected to PMOSDIODE is filtered out given that its source is connected to VDD. A highz node that is connected to NMOSDIODE is filtered out given that its source is connected to 0. When set to 2, highz node that is connected to PMOSDIODE is filtered out given that its source voltage is greater than drain voltage. A highz node that is connected to NMOSDIODE is filter out given that its drain voltage is greater than source voltage. This option is supported only in Spectre and APS. Possible values are 0, 1 and 2.

Wildcard scoping

22	`inst=[...]`	Subcircuit instances to which the check is applied. Default includes all instances (inst=*).
23	`xinst=[...]`	Subcircuit instances to be excluded from the check. Default is none.
24	`subckt=[...]`	The instances of the specified subcircuit to which the check is applied. Default includes all subcircuits (subckt=*).
25	`xsubckt=[...]`	The instances of the specified subcircuits that are excluded from the check. Default is none.
26	`depth=8`	Hierarchy levels (starting from top, instance, or subcircuit scope) to be checked. Default is 8.
	nonconducting_subckt	

© 2003-2020 All Rights Reserved.

27		All instances of the specified subcircuit or Verilog-A modules are considered non-conducting during floating node detection. All devices inside the subcircuit, and all branches inside the Verilog-A module are also considered non-conducting during floating node detection. Default is none. **Note:** This option is supported only in Spectre and Spectre APS.
28	`conducting_subckt=[...]`	All instances of specified subcircuit or VerilogA modules are considered conducting during the floating node detection. All devices inside the subcircuit, and all branches inside the VerilogA module are considered conducting during the floating node detection. Default is none.

Parameter Index

In the following index, the number corresponding to each parameter name indicates where to find the description of that parameter.

bjt_ith 6	depth 24	inst 22	sort 12
bjt_vbe 5	diode_vth 9	inverse 11	subckt 23
conducting_subckt 28	duration 4	isource_ith 10	time_window 17
debug_format 15	error_limit 18	node 1	xinst 23
debug_net 13	fanout 19	nonconducting_subckt 22	xnode 2
debug_report 16	filter 20	res_th 8	xnode_file 3
debug_time 14	filter_diocon_nodes 21	res_th_va 7	xsubckt 25

© 2003-2020 All Rights Reserved.

Dynamic MOSFET Voltage Check (dyn_mosv)

Description

Reports MOSFET devices fulfilling the conditional expression on device voltages and device size (w, l) for a time longer than the user-specified threshold duration.

Supported MOSFET variables are: v(g,s), v(g,d), v(g,b), v(d,s), v(d,b), v(s,b), v(g), v(d), v(s), v(b), l, and w

Supported operators are: +, -,*, /, ==,!=, <, <=, >, >=,||, &&, and !

The results are written to the dynamic.xml file, which can be viewed in a Web browser.

For additional information, refer to the *Dynamic MOSFET Voltage Check* section in the *Spectre Classic Simulator, Spectre APS, Spectre X, and Spectre XPS User Guide*.

Definition

```
Name dyn_mosv parameter=value ...
```

Parameters

Design check parameters

1	`model="[...]"`	MOSFET device model names to be checked.
2	`cond`	The conditional expression to be fulfilled. Default is `none`.
3	`duration=5.00E-09 sec`	Duration threshold. Default is `5.00E-09 sec`.
4	`sample=start`	Report extreme value or the start point. Possible values are `start` and `extreme`.
5	`sort=no`	If set to `no`, sorting is not performed. If set to `duration`, `dyn_mosv` will sort violations by duration. Default is `no`. Possible values are `no` and `duration`.

© 2003-2020 All Rights Reserved.

Filtering parameters

6	`time_window=[tstart, tstop] sec`	The time window during which the circuit check is applied. Multiple non-overlapping time windows are supported. Default time window is `0` to `tend`.
7	`error_limit=10000`	Maximum number of errors reported. Default is `10000`.

Wildcard scoping

8	`inst=[...]`	Subcircuit instances to which the check is applied. Default includes all instances (`inst=*`).
9	`xinst=[...]`	Subcircuit instances to be excluded from the check. Default is `none`.
10	`subckt=[...]`	The instances of the specified subcircuit to which the check is applied. Default includes all subcircuits (`subckt=*`).
11	`xsubckt=[...]`	The instances of the specified subcircuits that are excluded from the check. Default is `none`.
12	`depth=8`	Hierarchy levels (starting from top, instance, or subcircuit scope) to be checked. Default is `8`.

Parameter Index

In the following index, the number corresponding to each parameter name indicates where to find the description of that parameter.

`cond 2`	`error_limit 7`	`sample 4`	`time_window 6`
`depth 12`	`inst 8`	`sort 5`	`xinst 9`
`duration 3`	`model 1`	`subckt 10`	`xsubckt 11`

© 2003-2020 All Rights Reserved.

Dynamic Node Capacitance Check (dyn_nodecap)

Description

Reports the node capacitance at specified times (`time`) of a transient simulation. Device capacitances, grounded capacitances, and coupling capacitances are combined into one value.

The results are written to the dynamic.xml file, which can be viewed in a Web browser.

For additional information, refer to the *Dynamic Node Capacitance Check* section in the *Spectre Classic Simulator, Spectre APS, Spectre X, and Spectre XPS User Guide*.

Definition

```
Name dyn_nodecap parameter=value ...
```

Parameters

Design check parameters

1	`node="[...]"`	Nodes for which the capacitance needs to be checked. vsrc nodes are skipped.

Filtering parameters

2	`time=[...] sec`	time point(s) at which dynamic nodecap check is performed.
3	`error_limit=10000`	Maximum number of errors reported. Default is 10000.
4	`fanout=all`	Fanout setting to filter node with specified connection. This option is supported only in Spectre XPS. Possible values are `all`, `gate`, and `bulk`.

© 2003-2020 All Rights Reserved.

Wildcard scoping

5	`inst=[...]`	Subcircuit instances to which the check is applied. Default includes all instances (`inst=*`).
6	`xinst=[...]`	Subcircuit instances to be excluded from the check. Default is `none`.
7	`subckt=[...]`	The instances of the specified subcircuit to which the check is applied. Default includes all subcircuits (`subckt=*`).
8	`xsubckt=[...]`	The instances of the specified subcircuits that are excluded from the check. Default is `none`.
9	`depth=8`	Hierarchy levels (starting from top, instance, or subcircuit scope) to be checked. Default is `8`.
10	`intrinsic_cap_merge=no`	Merge the internal captab node to external node. Default is no. This option is supported only in Spectre and APS. Possible values are `no` and `yes`.

Parameter Index

In the following index, the number corresponding to each parameter name indicates where to find the description of that parameter.

depth 9	inst 5	subckt 7	xsubckt 8
error_limit 3	intrinsic_cap_merge 10	time 2	
fanout 4	node 1	xinst 6	

© 2003-2020 All Rights Reserved.

Dynamic Noisy Node Check (dyn_noisynode)

Description

Identifies the nodes with unstable or noisy node conditions. A node is considered unstable or noisy if its voltage fulfills the condition abs(dV/dt)>e1 and abs(d(dV/dt)dt)>e2 for a time longer than duration. Stable periods shorter than skip are ignored.

The results are written to the dynamic.xml file, which can be viewed in a Web browser.

For additional information, refer to the *Dynamic Noisy Node Check* section in the *Spectre Classic Simulator, Spectre APS, Spectre X, and Spectre XPS User Guide*.

Definition

```
Name dyn_noisynode parameter=value ...
```

Parameters

Design check parameters

1	`node="[...]"`	Nodes to which the check is applied. Default is `none`.
2	`duration=5.00E-07 sec`	Duration threshold. Default is `5.00E-07 sec`.
3	`e1=5.00E04 volt/sec`	The first derivative threshold. Default is `5.00E04`.
4	`e2=2.00E16 volt/(sec2)`	The second derivative threshold. Default is `2.00E16`.
5	`skip=50.0E-09 sec`	The stable period less than skip is ignored. Default is `50.0E-09`.

Filtering parameters

6	`time_window=[tstart, tstop] sec`	

© 2003-2020 All Rights Reserved.

		The time window during which the circuit check is applied. Multiple non-overlapping time windows are supported. Default time window is `0` to `tend`.
7	`error_limit=10000`	Maximum number of errors reported. Default is `10000`.
8	`fanout=all`	Fanout setting to filter node with specified connection. This option is supported only in Spectre XPS. Possible values are `all`, `gate`, and `bulk`.

Wildcard scoping

9	`inst=[...]`	Subcircuit instances to which the check is applied. Default includes all instances (`inst=*`).
10	`xinst=[...]`	Subcircuit instances to be excluded from the check. Default is `none`.
11	`subckt=[...]`	The instances of the specified subcircuit to which the check is applied. Default includes all subcircuits (`subckt=*`).
12	`xsubckt=[...]`	The instances of the specified subcircuits that are excluded from the check. Default is `none`.
13	`depth=8`	Hierarchy levels (starting from top, instance, or subcircuit scope) to be checked. Default is `8`.

Parameter Index

In the following index, the number corresponding to each parameter name indicates where to find the description of that parameter.


```
depth  13          error_limit  7     skip  5           xsubckt  12

duration  2        fanout  8          subckt  11

e1   3             inst  9           time_window  6
```


© 2003-2020 All Rights Reserved.

```
e2   4              node  1            xinst  10
```


© 2003-2020 All Rights Reserved.

Dynamic Pulse Width Check (dyn_pulsewidth)

Description

Reports nodes with pulse width error.

The pulse widths that fall outside of `pwmin_low` and `pwmax_low`, and `pwmin_high` and `pwmax_high` are reported.

The results are written to the dynamic.xml file, which can be viewed in a Web browser.

For additional information, refer to the *Dynamic Pulse Width Check* section in the *Spectre Classic Simulator, Spectre APS, Spectre X, and Spectre XPS User Guide*.

Definition

```
Name dyn_pulsewidth parameter=value ...
```

Parameters

Design check parameters

1	`node="[...]"`	Nodes to which the check is applied. Default is `none`.
2	`pwmin_low=0.0 sec`	The minimum value of the pulse width in logic 0 state.
3	`pwmax_low=infinity sec`	The maximum value of the pulse width in logic 0 state.
4	`pwmin_high=0.0 sec`	The minimum value of the pulse width in logic 1 state.
5	`pwmax_high=infinity sec`	The maximum value of the pulse width in logic 1 state.
6	`fanout=all`	Fanout setting to filter node with specified connection. This option is supported only in Spectre XPS. Possible values are `all`, `gate`, and `bulk`.

© 2003-2020 All Rights Reserved.

Digitize parameters

7	`vlth=0.2 V`	Low voltage threshold for signal net.
8	`vhth=0.8 V`	High voltage threshold for signal net.

Filtering parameters

9	`time_window=[tstart, tstop] sec`	Time window to which the circuit check is applied. Multiple non-overlapping time windows are supported. Default time window is 0 to tend.
10	`error_limit=10000`	Maximum number of errors reported. Default is 10000.

Wildcard scoping

11	`inst=[...]`	Subcircuit instances to which the check is applied. Default includes all instances (`inst=*`).
12	`xinst=[...]`	Subcircuit instances to be excluded from the check. Default is `none`.
13	`subckt=[...]`	The instances of the specified subcircuit to which the check is applied. Default includes all subcircuits (`subckt=*`).
14	`xsubckt=[...]`	The instances of the specified subcircuits that are excluded from the check. Default is `none`.
15	`depth=8`	Hierarchy levels (starting from top, instance, or subcircuit scope) to be checked. Default is `8`.

© 2003-2020 All Rights Reserved.

Parameter Index

In the following index, the number corresponding to each parameter name indicates where to find the description of that parameter.

depth 15
error_limit 10
fanout 6
inst 11
node 1
pwmax_high 5
pwmax_low 3
pwmin_high 4
pwmin_low 2
subckt 13
time_window 9
vhth 8
vlth 7
xinst 12
xsubckt 14

© 2003-2020
All Rights Reserved.

Dynamic Resistor Voltage Check (dyn_resv)

Description

Reports the resistor elements fulfilling the conditional expression on element voltages for a duration longer than the user-specified duration threshold.

Supported resistor variables are: v(1,2), v(1), and v(2)

Supported operators are: +, -,*, /, ==,!=, <, <=, >, >=,||, &&, and !

The results are written to the dynamic.xml file, which can be viewed in a Web browser.This check is supported only by Spectre XPS. For Spectre and Spectre APS use the `assert` statement.

For additional information, refer to the *Dynamic Resistor Voltage Check* section in the *Spectre Classic Simulator, Spectre APS, Spectre X, and Spectre XPS User Guide*.

Definition

```
Name dyn_resv parameter=value ...
```

Parameters

Design check parameters

1	`cond`	The conditional expression to be fulfilled. Default is `none`.
2	`duration=5.00E-09 sec`	Duration threshold. Default is `5.00E-09 secs`.

Filtering parameters

3	`time_window=[tstart, tstop] sec`	

© 2003-2020 All Rights Reserved.

		The time window during which the circuit check is applied. Multiple non-overlapping time windows are supported. Default time window is `0` to `tend`.
4	`error_limit=10000`	Maximum number of errors reported. Default is `10000`.

Wildcard scoping

5	`inst=[...]`	Subcircuit instances to which the check is applied. Default includes all instances (`inst=*`).
6	`xinst=[...]`	Subcircuit instances to be excluded from the check. Default is `none`.
7	`subckt=[...]`	The instances of the specified subcircuit to which the check is applied. Default includes all subcircuits (`subckt=*`).
8	`xsubckt=[...]`	The instances of the specified subcircuits that are excluded from the check. Default is `none`.
9	`depth=8`	Hierarchy levels (starting from top, instance, or subcircuit scope) to be checked. Default is `8`.

Parameter Index

In the following index, the number corresponding to each parameter name indicates where to find the description of that parameter.


```
cond  1            error_limit  4     time_window  3

depth  9           inst  5           xinst  6

duration  2        subckt  7         xsubckt  8
```


© 2003-2020 All Rights Reserved.

Dynamic Setup and Hold Check (dyn_setuphold)

Description

Reports nodes with setup or hold timing errors with reference to a clock signal. The transition time of the clock signal is `refTime`.

For setup timing, transitions that happen between `refTime + delay - setupTime` and `refTime + delay` are reported.

For hold timing, transitions that happen between `refTime + delay` and `refTime + delay + holdTime` are reported.

`ref_vhth` and `vhth` parameters are used for triggering rising edge measurements, while `ref_vlth` and `vlth` are used for triggering falling edge measurements.

If the `subckt` parameter is specified, `node` and `ref_node` are considered as local nodes to the specified subcircuit. In other words, `node` and `ref_node` belong to instances of the specified subcircuit. Only one `subckt` value can be specified per check, with no wildcard.

If the `subckt` parameter is not specified, `node` and `ref_node` are considered as global nodes with hierarchical names starting from the top level.

The parameters `inst`, `xinst`, `xsubckt`, and `depth` are not supported.

The results are written to the dynamic.xml file, which can be viewed in a Web browser.

For additional information, refer to the *Dynamic Setup and Hold Check* section in the *Spectre Classic Simulator, Spectre APS, Spectre X, and Spectre XPS User Guide*.

Definition

```
Name dyn_setuphold parameter=value ...
```

Parameters

Design check parameters

1	`node="[...]"`	Nodes to which the check is applied. Default is `none`.

© 2003-2020 All Rights Reserved.

2	`ref_node`	Name of the referenced clock. Wildcards are not supported.
3	`setup_time=0.0 sec`	Setup time violation window. If specified, the setup check is enabled. Default is `0.0 sec`.
4	`hold_time=0.0 sec`	Hold time violation window. If specified, the hold check is enabled.
5	`delay=0.0 sec`	Delay of the reference signal.
6	`edge=rise`	Edge type of the signal net. Possible values are `rise`, `fall`, and `both`. Default is `rise`. Possible values are `rise`, `fall`, and `both`.
7	`ref_edge=rise`	Edge type of the reference signal. Possible values are `rise`, `fall`, and `both`. Default is `rise`. Possible values are `rise`, `fall`, and `both`.
8	`fanout=all`	Fanout setting to filter node with specified connection. This option is supported only in Spectre XPS. Possible values are `all`, `gate`, and `bulk`.

Digitize parameters

9	`setup_chk_time=0.0 sec`	Setup time checking window.
10	`hold_chk_time=0.0 sec`	Hold time checking window.
11	`vlth=0.2 V`	Low voltage threshold for the signal net.
12	`ref_vlth=0.2 V`	Low voltage threshold for the referenced net.
13	`vhth=0.8 V`	High voltage threshold for the signal net.
14	`ref_vhth=0.8 V`	High voltage threshold for the referenced net.

Filtering parameters

15	`time_window=[tstart, tstop] sec`	The time window during which the circuit check is applied. Multiple non-overlapping time windows are supported. Default time window is `0` to `tend`.

© 2003-2020 All Rights Reserved.

16	`margin_stats=no`	Whether to report margin stats. Default is no. Possible values are `no` and `yes`.
17	`error_limit=10000`	Maximum number of errors reported. Default is `10000`.

Wildcard scoping

18	`subckt=none`	Instances of the specified subcircuit to which the check is applied. Default is none.
19	`report=violation`	Report all checks or violation only. Default is violation. Possible values are `all` and `violation`.

Parameter Index

In the following index, the number corresponding to each parameter name indicates where to find the description of that parameter.

`delay` 5	`hold_time` 4	`ref_vhth` 14	`subckt` 18
`edge` 6	`margin_stats` 16	`ref_vlth` 12	`time_window` 15
`error_limit` 17	`node` 1	`report` 19	`vhth` 13
`fanout` 8	`ref_edge` 7	`setup_chk_time` 9	`vlth` 11
`hold_chk_time` 10	`ref_node` 2	`setup_time` 3	

© 2003-2020 All Rights Reserved.

Dynamic Statistical HighZ Node Check (dyn_stahighz)

Description

Identifies and reports nodes that are in high impedance state at a user given time. Deploys a statistical method of forcing (`pinging`) different voltage levels or voltage ramp ups to all nodes, and detecting floating nodes based on the current changes in the connecting devices.

The results are written to the dynamic.xml file, which can be viewed in a Web browser.

Definition

```
Name dyn_stahighz parameter=value ...
```


© 2003-2020 All Rights Reserved.

Parameters

Design check parameters

1	`domains="[...]"`	Pairs of power supply domains in which floating nodes are checked. Example: domains=[VDD VSS VPP VSS]. Domain also defines high voltage (high_voltage) value for forcing node voltages. Default is `none`. Wildcards not allowed.
2	`ping_start=[...] sec`	Time at which the check is initiated.
3	`ping_count=300`	Number of statistical periods being used. Default is `300`.
4	`ping_duration`	Duration of one statistical period. One `ping` consists of 3 ping_duration (high/low forcing, ramp up forcing, release). Default is `none`.
5	`ping_ibias`	Lowest bias current in the design. Default is `none`. Internal value ping_resistor=high_voltage/(ping_ibias/10).
6	`ping_iabsthresh`	Current threshold for floating node detection during high/low forcing. Default is `high_voltage/ping_resistor`.
7	`ping_iabsthresh_ramp`	Current threshold for floating node detection during ramp forcing. Default is `100*high_voltage/ping_resistor`.
8	`ping_irelthresh=1000`	Relative threshold for floating node detection for both high/low and ramp forcing. Default is `1000`.
9	`seed=3`	Seed for random number generation.
10	`domain_voltage_thresh=0.0`	Lowest threshold for domain voltage. If a node has voltage less than domain_voltage_thresh, it will be excluded from ping. Default is `0.0`.

© 2003-2020 All Rights Reserved.

11	`save=no`	To probe gate voltage of MOSFETs, base voltage of BJTs, drain current of MOSFETs and collector current of BJTs. When value is set to `yes`, a new waveform file will be written in raw directory. The format of this new waveform file will be <*`CheckName`*>_<`PingStart`>`.tran.tran`, where <*`CheckName`*> is the name of check statement and <`PingStart`> is the time specified in ping_start parameter. The waveform will start from PingStart until ping simulation is finished. Possible values are `yes` and `no`. Default is `no`.
12	`distribute=no`	Distribute method. Possible values are `no`, `fork`, `_rsh`, `_ssh`, `_lsf`, `_sge`, `_nc`, and `_auto`.
13	`numprocesses=0`	Number of processes for distributed analysis.

Parameter Index

In the following index, the number corresponding to each parameter name indicates where to find the description of that parameter.

distribute 12	ping_count 3	ping_ibias 5	seed 9
domain_voltage_thresh 10	ping_duration 4	ping_irelthresh 8	
domains 1	ping_iabsthresh 6	ping_start 2	
numprocesses 13	ping_iabsthresh_ramp 7	save 11	

© 2003-2020 All Rights Reserved.

Dynamic Subckt Port Voltage/Current Check (dyn_subcktport)

Description

Reports instances of the user-specified `subckt` fulfilling the conditional expression on port voltages and port currents for a time longer than the user-specified `duration`. Only one subckt is allowed per statement.

The voltages and currents of a port can be referenced by the subckt's port-name. For example, consider a subckt definition `".subckt NOT port_A port_B"`. Here, supported subckt port-name are: `v(port_A)`, `v(port_B)`, `v(port_A,port_B)`, `i(port_A)`, and `i(port_B)`. The port current is positive when the current is flowing into a subckt.

Supported operators are: +, -,*, /, ==,!=, <, <=, >, >=,||, &&, and !

Subcircuit instances whose depth is greater than specified value are excluded from the check.

The results are written to the `dynamic.xml` file, which can be viewed in a Web browser. This check is supported only by XPS.

For additional information, refer to the *Dynamic Subcircuit Port/Voltage/Current Check* section in the *Spectre Classic Simulator, Spectre APS, Spectre X, and Spectre XPS User Guide*.

Definition

```
Name dyn_subcktport parameter=value ...
```

Parameters

Design check parameters

1	`subckt`	Instances of the specified subcircuit to which the check is applied. Wildcard is not supported. Only one subcircuit is allowed per statement. Default is none.
2	`cond`	The conditional expression to be fulfilled. Default is none.

© 2003-2020 All Rights Reserved.

Filtering parameters

3	`time_window=[tstart, tstop] sec`	Time window to which the circuit check is applied. Multiple non-overlapping time windows are supported. Default time window is 0 to tend.
4	`duration=5.00E-09 sec`	Duration threshold. Default is 5.00E-09 sec.
5	`error_limit=10000`	Maximum number of errors reported. Default is 10000.

Parameter Index

In the following index, the number corresponding to each parameter name indicates where to find the description of that parameter.

`cond` 2	`duration` 4	`error_limit` 5
`subckt` 1	`time_window` 3	

© 2003-2020 All Rights Reserved.

Dynamic Subckt Port Power Check (dyn_subcktpwr)

Description

Reports port currents, port powers, and subcircuit powers.

The port current is positive when current is going into a subcircuit. This check will report average, RMS, and the maximum values of the current entering a port.

The power analysis can be done by using the `power` parameter. When the `power` parameter is set to `on`, two additional sections are generated. The first section reports the average, RMS, and the maximum power entering all the ports that are defined by the `port` parameter. The second section reports the average, RMS, and maximum power consumed by each instance of a subcircuit that is defined by the `inst` parameter.

Note: For the second section, it is mandatory to have the parameter port set to [*].

Max is defined as the maximum of the absolute of a waveform within a `time_window`. For example, consider a current entering a port having a peak value of 1mA and another peak value of -2mA below 0. Therefore, the check will report "Max (A)" as -2mA and the time point will be reported in "Max Time(s)". Therefore, this check will use an absolute function to find the maximum current/power but it will report that finding with a regular current/power. Unlike Max, the average and RMS are defined as the average or RMS value of a regular waveform within a `time_window`, respectively.

The `filter` parameter can be used to filter out ports that are connected only to the gate of MOSFET.

The `inst_file` parameters are supported only in Spectre XPS.

The results are reported to the dynamic.xml file, which can be viewed in a Web browser.

For additional information, refer to the *Dynamic Subcircuit Port Power Check* section in the *Spectre Classic Simulator, Spectre APS, Spectre X, and Spectre XPS User Guide*.

Definition

```
Name dyn_subcktpwr parameter=value ...
```

Parameters

© 2003-2020 All Rights Reserved.

Design check parameters

1	`port=[...]`	Ports to be checked. Default is none.
2	`net`	Net. Default is none.
3	`power=off`	Report power or not. Possible values are `off` and `on`.

Filtering parameters

4	`filter=none`	Check all ports or only those not connecting to gates. Possible values are `none` and `gates`.
5	`ith=0.0`	Port currents with either abs(AVG), RMS or abs(MAX) value larger than the specified `ith` are reported. In other words, if all abs(AVG), RMS and abs(MAX) values are below `ith` then it will be filtered out. This parameter is only supported in XPS. Default is 0.0.
6	`time_window=[tstart, tstop] sec`	Time window to which the circuit check is applied. Multiple non-overlapping time windows are supported. Default time window is `0` to `tend`.
7	`error_limit=10000`	Maximum number of errors reported. Default is `10000`.

Wildcard scoping

8	`inst=[...]`	Subcircuit instances to which the check is applied. Default is `none`.
9	`depth`	Hierarchy levels (starting from top, instance, or subcircuit scope) to be checked. Default is `none`.

© 2003-2020 All Rights Reserved.

Parameter Index

In the following index, the number corresponding to each parameter name indicates where to find the description of that parameter.

depth 9 inst 8 port 1

error_limit 7 ith 5 power 3

filter 4 net 2 time_window 6

© 2003-2020 All Rights Reserved.

Static Capacitor Check (static_capacitor)

Description

Reports all capacitors within or outside the range of `cmin` and `cmax`. It can also generate a distribution list of all the capacitors in a circuit. If the `type` parameter is set to range, all capacitors outside the range of `cmin` and `cmax` will be reported.

If the `type` parameter is set to `print`, all capacitors between `cmin` and `cmax` will be reported. In the report, the capacitor names can be sorted by clicking on the `Device name` header in a Web browser.

If the `type` parameter is set to `distr`, a distribution list will be generated for all capacitors. There are a maximum of 9 bins: -Inf - 0, 0 - 10a, 10a - 100a, 100a - 1f, 1f - 10f, 10f - 100f, 100f - 1p, 1p - 10p, and 10p - Inf

However, if two or more consecutive bins are empty, they will merge into one bin, reducing the number of bins. If type is set to `distr`, the parameters `cmin`, `cmax`, and `error_limit` are ignored.

The results are reported to the static.xml file, which can be viewed in a Web browser. This check is supported only by Spectre XPS.

For additional information, refer to the *Static Capacitor Check* section in the *Spectre Classic Simulator, Spectre APS, Spectre X, and Spectre XPS User Guide*.

Definition

```
Name static_capacitor parameter=value ...
```

Parameters

Design check parameters

1	`type=print`	Checking types. Possible values are `range`, `distr`, and `print`.
2	`cmin=-1 F`	Minimum capacitor value.
3	`cmax=1 F`	Maximum capacitor value.

© 2003-2020 All Rights Reserved.

Filtering parameters

4	`error_limit=10000`	Maximum number of errors reported. Default is `10000`.

© 2003-2020 All Rights Reserved.

Static Capacitor Voltage Check (static_capv)

Description

Reports capacitor devices fulfilling the conditional expression on device voltages.

Supported capacitor variables are: v(1,2), v(1), and v(2)

Supported operators are: +, -,*, /, ==,!=, <, <=, >, >=,||, &&, and !

The results are written to the static.xml file, which can be viewed in a Web browser. This check is supported only by Spectre XPS.

For additional information, refer to the *Static Capacitor Voltage Check* section in the *Spectre Classic Simulator, Spectre APS, Spectre X, and Spectre XPS User Guide*.

Definition

```
Name static_capv parameter=value ...
```

Parameters

Design check parameters

1	`cond`	The conditional expression to be fulfilled. Default is `none`.
2	`rpt_node=no`	Report node voltages. Possible values are `no`, `all`, `top` and `selected`.

Digitize parameters

3	`vpth=-0.4 V`	PMOS threshold voltage. This value is used to calculate the voltage drop across a PMOS channel during voltage propagation. Default is -0.4 V.
4	`vnth=0.5 V`	NMOS threshold voltage. This value is used to calculate the voltage drop across a NMOS channel during voltage propagation. Default is 0.5 V.
5	`pwl_time=`	Time for pwl src to be considered as constant vsrc.

© 2003-2020 All Rights Reserved.

Filtering parameters

6	`error_limit=10000`	Maximum number of errors reported. Default is `10000`.

Wildcard scoping

7	`inst=[...]`	Subcircuit instances to which the check is applied. Default includes all instances (`inst=*`).
8	`xinst=[...]`	Subcircuit instances to be excluded from the check. Default is `none`.
9	`subckt=[...]`	The instances of the specified subcircuit to which the check is applied. Default includes all subcircuits (`subckt=*`).
10	`xsubckt=[...]`	The instances of the specified subcircuits that are excluded from the check. Default is `none`.
11	`depth=8`	Hierarchy levels (starting from top, instance, or subcircuit scope) to be checked. Default is `8`.

Parameter Index

In the following index, the number corresponding to each parameter name indicates where to find the description of that parameter.

`cond 1`	`inst 6`	`subckt 8`	`xinst 7`
`depth 10`	`pwl_time 4`	`vnth 3`	`xsubckt 9`
`error_limit 5`	`rpt_node 2`	`vpth 2`	

© 2003-2020 All Rights Reserved.

Static Coupling Impact Check (static_coupling)

Description

Evaluate the possible coupling effects in the circuit.

For each victim node, identify its voltage level impact from aggressors by dividing the total agressor's charge with its total capacitance (including cc+gc+device cap). Each agressor's charge is calculated by multiplying the coupling aggressor's voltage level (using Vmax for worst case analysis) by coupling capacitance. In this check, only capacitors written in netlist are counted.

The results are reported into a file with the extension `static.xml`, which can be read with a web browser.

Definition

```
Name static_coupling parameter=value ...
```


© 2003-2020 All Rights Reserved.

Parameters

Design check parameters

1	`node="[...]"`	Nodes to which the check is applied. Default is `none`.

Filtering parameters

2	`error_limit=100`	Maximum number of errors reported. Default is `100`.

Digitize parameters

3	`vpth=-0.4 V`	PMOS threshold voltage. This value is used to calculate the voltage drop across a PMOS channel during voltage propagation. Default is -0.4 V.
4	`vnth=0.5 V`	NMOS threshold voltage. This value is used to calculate the voltage drop across a NMOS channel during voltage propagation. Default is 0.5 V.
5	`pwl_time=infinity`	Time for pwl src to be considered as constant vsrc.

Wildcard scoping

6	`inst=[...]`	Subcircuit instances to which the check is applied. Default includes all instances (inst=*).
7	`xinst=[...]`	Subcircuit instances to be excluded from the check. Default is none.
8	`subckt=[...]`	The instances of the specified subcircuit to which the check is applied. Default includes all subcircuits (subckt=*).
9	`xsubckt=[...]`	The instances of the specified subcircuits that are excluded from the check. Default is none.
10	`depth=8`	Hierarchy levels (starting from top, instance, or subcircuit scope) to be checked. Default is 8.

© 2003-2020 All Rights Reserved.

Parameter Index

In the following index, the number corresponding to each parameter name indicates where to find the description of that parameter.

depth 10 node 1 vnth 4 xsubckt 9

error_limit 2 pwl_time 5 vpth 3

inst 6 subckt 8 xinst 7

© 2003-2020 All Rights Reserved.

Static DC Leakage Path Check (static_dcpath)

Description

Reports the always conducting paths between the power supply nodes.

The results are written to the static.xml file, which can be viewed in a Web browser. This check is supported only by Spectre XPS and Spectre APS.

For additional information, refer to the *Static DC Leakage Path Check* section in the *Spectre Classic Simulator, Spectre APS, Spectre X, and Spectre XPS User Guide*.

Definition

```
Name static_dcpath parameter=value ...
```

Parameters

Design check parameters

1	`net="[...]"`	The leakage path between the voltage source nodes is checked. `net` defines a set of nodes and not a pair. For example, node = `[vdd vdd1 0]` checks the leakage path between `vdd` and `vdd1`, `vdd` and `0`, and `vdd1` and `0`.
2	`rpt_node=no`	Report node voltages. Possible values are `no`, `all`, `top` and `selected`.

Digitize parameters

3	`vpth=-0.4 V`	PMOS threshold voltage. This value is used to calculate the voltage drop across a PMOS channel during voltage propagation. Default is `-0.4 V`.
4	`vnth=0.5 V`	NMOS threshold voltage. This value is used to calculate the voltage drop across a NMOS channel during voltage propagation. Default is `0.5 V`.
5	`pwl_time=`	Time for pwl src to be considered as constant vsrc.

© 2003-2020 All Rights Reserved.

Filtering parameters

6	`error_limit=10000`	Maximum number of errors reported. Default is `10000`.

Parameter Index

In the following index, the number corresponding to each parameter name indicates where to find the description of that parameter.

`error_limit` 6 `rpt_node` 2

`net` 1 `vpth` 3

`pwl_time` 5 `vnth` 4

© 2003-2020 All Rights Reserved.

Static Diode Voltage Check (static_diodev)

Description

Reports the diode devices fulfilling the conditional expression on device voltages.

Supported diode variables are: `v(a,c)`, `v(a)`, and `v(c)`

Supported operators are: +, -,*, /, ==,!=, <, <=, >, >=,||, &&, and !

The results are written to the static.xml file, which can be viewed in a Web browser.This check is supported only by Spectre XPS and Spectre APS.

For additional information, refer to the *Static Diode Voltage Check* section in the *Spectre Classic Simulator, Spectre APS, Spectre X, and Spectre XPS User Guide*.

Definition

```
Name static_diodev parameter=value ...
```

Parameters

Design check parameters

1	`model="[...]"`	MOSFET device model names to be checked.
2	`cond`	The conditional expression to be fulfilled. Default is `none`.
3	`rpt_node=no`	Report node voltages. Possible values are `no`, `all`, `top` and `selected`.

Digitize parameters

4	`vpth=-0.4 V`	PMOS threshold voltage. This value is used to calculate the voltage drop across a PMOS channel during voltage propagation. Default is `-0.4 V`.
5	`vnth=0.5 V`	NMOS threshold voltage. This value is used to calculate the voltage drop across a NMOS channel during voltage propagation. Default is `0.5 V`.

© 2003-2020 All Rights Reserved.

6	`pwl_time=`	Time for pwl src to be considered as constant vsrc.

Filtering parameters

7	`error_limit=10000`	Maximum number of errors reported. Default is `10000`.

Wildcard scoping

8	`inst=[...]`	Subcircuit instances to which the check is applied. Default includes all instances (inst=*).
9	`xinst=[...]`	Subcircuit instances to be excluded from the check. Default is none.
10	`subckt=[...]`	The instances of the specified subcircuit to which the check is applied. Default includes all subcircuits (subckt=*).
11	`xsubckt=[...]`	The instances of the specified subcircuits that are excluded from the check. Default is none.
12	`depth=8`	Hierarchy levels (starting from top, instance, or subcircuit scope) to be checked. Default is 8.

Parameter Index

In the following index, the number corresponding to each parameter name indicates where to find the description of that parameter.

`cond 2`	`inst 8`	`rpt_node 3`	`vpth 4`
`depth 12`	`model 1`	`subckt 10`	`xinst 9`
`error_limit 7`	`pwl_time 6`	`vnth 5`	`xsubckt 11`

© 2003-2020 All Rights Reserved.

Static ERC Check (static_erc)

Description

Performs various electrical rule checks and reports the devices with violations.

The results are reported to the static.xml file, which can be viewed in a Web browser.

This check is only supported by Spectre XPS and Spectre APS.

For additional information, refer to the *Static ERC Check* section in the *Spectre Classic Simulator, Spectre APS, Spectre X, and Spectre XPS User Guide*.

Definition

```
Name static_erc parameter=value ...
```

Parameters

Design check parameters

1	`hotwell=off`	Reports MOSFET with bulk not connected to VDD or GND. Possible values are `off` and `on`.
2	`floatbulk=off`	Reports MOSFET with floating bulk. Possible values are `off`, `all`, and `no_top`.
3	`floatgate=off`	Reports MOSFET with floating gate. Possible values are `off`, `all`, `no_top`, `no_moscap`, and `no_top_moscap`.
4	`dangle=off`	Reports the dangling nodes. Possible values are `off`, `all`, and `no_top`.
5	`gate2power=off`	Reports PMOS with gate connected to ground and NMOS with gate connected to VDD. Possible values are `off` and `on`.
6	`rpt_node=no`	Report node voltages. Possible values are `no`, `all`, `top` and `selected`.

© 2003-2020 All Rights Reserved.

Digitize parameters

7	`vlth=0.2 v`	DC sources with voltage lower than `vlth` carry static 0, and is considered GND. Default is `0.2 V`. Applicable only with gate2power and hotwell.
8	`vhth=0.8 v`	DC sources with voltage higher than `vhth` carry static 1, and is considered VDD. Default is `0.8 V`. Applicable only with gate2power and hotwell.
9	`vpth=-0.4 V`	PMOS threshold voltage. This value is used to calculate the voltage drop across a PMOS channel during voltage propagation. Default is `-0.4 V`.
10	`vnth=0.5 V`	NMOS threshold voltage. This value is used to calculate the voltage drop across a NMOS channel during voltage propagation. Default is `0.5 V`.
11	`pwl_time`	Time for pwl src to be considered as constant vsrc.
12	`rmax=100000000 ohm`	Maximum resistance value where the node is considered to be connected to the voltage source node.

Filtering parameters

13	`error_limit=10000`	Maximum number of errors reported. Default is `10000`.

Wildcard scoping

14	`inst=[...]`	Subcircuit instances to which the check is applied. Default includes all instances (inst=*).
15	`xinst=[...]`	Subcircuit instances to be excluded from the check. Default is none.
16	`subckt=[...]`	The instances of the specified subcircuit to which the check is applied. Default includes all subcircuits (subckt=*).

© 2003-2020 All Rights Reserved.

17	`xsubckt=[...]`	The instances of the specified subcircuits that are excluded from the check. Default is none.
18	`depth=8`	Hierarchy levels (starting from top, instance, or subcircuit scope) to be checked. Default is 8.

Parameter Index

In the following index, the number corresponding to each parameter name indicates where to find the description of that parameter.


```
dangle  4          gate2power  5      rpt_node  6        vpth  9

depth  18          hotwell  1         subckt  16         xinst  15

error_limit  13    inst  14           vhth  8            xsubckt  17

floatbulk  2       pwl_time  11       vlth  7

floatgate  3       rmax  12           vnth  10
```


© 2003-2020 All Rights Reserved.

Static Highfanout Check (static_highfanout)

Description

This check detects the MOSFETs having gate connected to a highfanout node, and reports the nodes having count larger than the specified count.

The results are reported into a file with the extension `static.xml`, which can be read with a web browser.

Definition

```
Name static_highfanout parameter=value ...
```


© 2003-2020 All Rights Reserved.

Parameters

Design check parameters

1	`node=[...]`	Nodes to which the check is applied. Default is none.
2	`upth=10`	Defines the ratio of the width of PMOS (pull-up) and the loading of MOSFETs (with gate connection). The load of transmission gate are also considered. Default is `10`.
3	`downth=20`	Defines the ratio of the width of NMOS (pull-down) and the loading of MOSFETs. Default is `20`.
4	`rcut=1e6`	The resistor bigger than its value is cut. The default value is `1e6`.

Filtering parameters

5	`error_limit=10000`	Maximum number of errors reported. Default is `10000`.

Wildcard scoping

6	`inst=[...]`	Subcircuit instances to which the check is applied. Default includes all instances (`inst=*`).
7	`xinst=[...]`	Subcircuit instances to be excluded from the check. Default is none.
8	`subckt=[...]`	The instances of the specified subcircuit to which the check is applied. Default includes all subcircuits (`subckt=*`).
9	`xsubckt=[...]`	The instances of the specified subcircuits that are excluded from the check. Default is none.
10	`depth=8`	Hierarchy levels (starting from top, instance, or subcircuit scope) to be checked. Default is `8`.

Parameter Index

In the following index, the number corresponding to each parameter name indicates where to find the description of that parameter.

© 2003-2020 All Rights Reserved.

```
depth  10          inst  6          subckt  8          xsubckt  9

downth  3          node  1          upth  2

error_limit  5     rcut  4          xinst  7
```


© 2003-2020 All Rights Reserved.

Static HighZ Node Check (static_highz)

Description

Reports the nodes that do not have any possible conducting path to a DC power supply or ground.

The results are written to the static.xml file, which can be viewed in a Web browser.

This check is supported only by Spectre XPS.

For additional information, refer to the *Static High Impedance Node Check* section in the *Spectre Classic Simulator, Spectre APS, Spectre X, and Spectre XPS User Guide*.

Definition

```
Name static_highz parameter=value ...
```

Parameters

Design check parameters

1	`node="[...]"`	Nodes to which the check is applied. Default is `none`.
2	`fanout=all`	Fanout setting to filter node with specified connection. When set to `gate_has_driver_no_moscap`, floating nodes only connecting to MOSCAPs will not be checked. When set to `gate_no_moscap`, gates only connecting to MOSCAPs will not be checked. Possible values are `all`, `gate`, `bulk` ,`gate_has_driver_no_moscap`, and `bulkgate_no_moscap`.
3	`rpt_node=no`	Report node voltages. Possible values are `no`, `all`, `top` and `selected`.

© 2003-2020 All Rights Reserved.

Digitize parameters

4	`vpth=-0.4 V`	PMOS threshold voltage. This value is used to calculate the voltage drop across a PMOS channel during voltage propagation. Default is `-0.4 V`.
5	`vnth=0.5 V`	NMOS threshold voltage. This value is used to calculate the voltage drop across a NMOS channel during voltage propagation. Default is `0.5 V`.
6	`pwl_time=infinity`	Time for pwl src to be considered as constant vsrc.

Filtering parameters

7	`error_limit=10000`	Maximum number of errors reported. Default is `10000`.

Wildcard scoping

8	`inst=[...]`	Subcircuit instances to which the check is applied. Default includes all instances (`inst=*`).
9	`xinst=[...]`	Subcircuit instances to be excluded from the check. Default is none.
10	`subckt=[...]`	The instances of the specified subcircuit to which the check is applied. Default includes all subcircuits (`subckt=*`).
11	`xsubckt=[...]`	The instances of the specified subcircuits that are excluded from the check. Default is none.
12	`depth=8`	Hierarchy levels (starting from top, instance, or subcircuit scope) to be checked. Default is `8`.

Parameter Index

In the following index, the number corresponding to each parameter name indicates where to find the description of that parameter.

© 2003-2020 All Rights Reserved.

```
depth  12          inst  8           rpt_node  3        vpth  4

error_limit  7     node  1           subckt  10         xinst  9

fanout  2          pwl_time  6       vnth  5            xsubckt  11
```


© 2003-2020
All Rights Reserved.

Static MOSFET Voltage Check (static_mosv)

Description

Reports the MOSFET devices fulfilling the conditional expression on device voltages and device size (w, l).

Supported MOSFET variables are: v(g,s), v(g,d), v(g,b),v(d,s), v(d,b), v(s,b), v(g), v(d), v(s), v(b), l, and w

Supported operators are: +, -,*, /, ==,!=, <, <=, >, >=,||, &&, and !

The results are written to the static.xml file, which can be viewed in a Web browser. This check is supported only by Spectre XPS.

For additional information, refer to the *Static MOSFET Voltage Check* section in the *Spectre Classic Simulator, Spectre APS, Spectre X, and Spectre XPS User Guide*.

Definition

```
Name static_mosv parameter=value ...
```

Parameters

Design check parameters

1	`model="[...]"`	MOSFET device model names to be checked.
2	`cond`	The conditional expression to be fulfilled. Default is `none`.
3	`rpt_node=no`	Report node voltages. Possible values are `no`, `all`, `top` and `selected`.

Digitize parameters

4	`vpth=-0.4 V`	PMOS threshold voltage. This value is used to calculate the voltage drop across a PMOS channel during voltage propagation. Default is `-0.4 V`.

© 2003-2020 All Rights Reserved.

5	`vnth=0.5 V`	NMOS threshold voltage. This value is used to calculate the voltage drop across a NMOS channel during voltage propagation. Default is `0.5 V`.
6	`pwl_time=infinity`	Time for pwl src to be considered as constant vsrc.

Filtering parameters

7	`error_limit=10000`	Maximum number of errors reported. Default is `10000`.

Wildcard scoping

8	`inst=[...]`	Subcircuit instances to which the check is applied. Default includes all instances (`inst=*`).
9	`xinst=[...]`	Subcircuit instances to be excluded from the check. Default is `none`.
10	`subckt=[...]`	The instances of the specified subcircuit to which the check is applied. Default includes all subcircuits (`subckt=*`).
11	`xsubckt=[...]`	The instances of the specified subcircuits that are excluded from the check. Default is `none`.
12	`depth=8`	Hierarchy levels (starting from top, instance, or subcircuit scope) to be checked. Default is `8`.

Parameter Index

In the following index, the number corresponding to each parameter name indicates where to find the description of that parameter.

`cond 2`	`inst 8`	`rpt_node 3`	`vpth 4`
`depth 12`	`model 1`	`subckt 10`	`xinst 9`

© 2003-2020 All Rights Reserved.

```
error_limit  7     pwl_time  6       vnth  5           xsubckt  11
```


© 2003-2020 All Rights Reserved.

Static NMOS to vdd count (static_nmos2vdd)

Description

This check counts the unpaired NMOS in a charging path from a fanout node to VDD and report paths that have an NMOS count greater than specified count. The check analyzes the fanout nodes only. It does not check the nodes that connect to MOSDIODEs or MOSCAPs.

The results are written to a file with the extension `static.xml`, which can be viewed in a web browser.

Definition

```
Name static_nmos2vdd parameter=value ...
```

Parameters

Design check parameters

1	`node="[...]"`	Nodes to which the check is applied. Default is none.

Filtering parameters

2	`count=3`	Maximum number of permitted NMOS. Default is 3.

Wildcard scoping

3	`inst=[...]`	Subcircuit instances to which the check is applied. Default includes all instances (inst=*).
4	`xinst=[...]`	Subcircuit instances to be excluded from the check. Default is none.
5	`subckt=[...]`	The instances of the specified subcircuit to which the check is applied. Default includes all subcircuits (subckt=*).
6	`xsubckt=[...]`	The instances of the specified subcircuits that are excluded from the check. Default is none.
7	`depth=8`	Hierarchy levels (starting from top, instance, or subcircuit scope) to be checked. Default is 8.

© 2003-2020 All Rights Reserved.

Static NMOS Forward Bias Bulk Check (static_nmosb)

Description

Reports the NMOS devices with a forward-biased bulk condition. A violation is generated when the bulk bias voltage meets the following conditions:

- when `mode` = `definite`:

  ```
  min( Vb ) >= min( Vd, Vs ) + abs( vt )
  ```

- when `mode` = `possible`:

  ```
  max( Vb ) >= min( Vd, Vs ) + abs( vt )
  ```

The results are written to the static.xml file, which can be viewed in a Web browser. This check is supported only by Spectre XPS and Spectre APS.

For additional information, refer to the *Static NMOS/PMOS Forward Bias Bulk Check* section in the *Spectre Classic Simulator, Spectre APS, Spectre X, and Spectre XPS User Guide*.

Definition

```
Name static_nmosb parameter=value ...
```

Parameters

Design check parameters

1	`model="[...]"`	MOSFET device model names to be checked.
2	`rpt_node=no`	Report node voltages. Possible values are `no`, `all`, `top` and `selected`.
3	`mode=definite`	Mode `possible` will report all possible violations. Mode `definite` will report definite violations. Default is `definite`. Possible values are `definite` and `possible`.
4	`vt=0.3 V`	Threshold for p-n junction being checked. Default is `0.3V`.

© 2003-2020 All Rights Reserved.

Digitize parameters

5	`vpth=-0.4 V`	PMOS threshold voltage. This value is used to calculate the voltage drop across a PMOS channel during voltage propagation. Default is -0.4 V.
6	`vnth=0.5 V`	NMOS threshold voltage. This value is used to calculate the voltage drop across a NMOS channel during voltage propagation. Default is 0.5 V.
7	`pwl_time=infinity`	Time for pwl src to be considered as constant vsrc.

Filtering parameters

8	`error_limit=10000`	Maximum number of errors reported. Default is `10000`.

Wildcard scoping

9	`inst=[...]`	Subcircuit instances to which the check is applied. Default includes all instances (inst=*).
10	`xinst=[...]`	Subcircuit instances to be excluded from the check. Default is none.
11	`subckt=[...]`	The instances of the specified subcircuit to which the check is applied. Default includes all subcircuits (subckt=*).
12	`xsubckt=[...]`	The instances of the specified subcircuits that are excluded from the check. Default is none.
13	`depth=8`	Hierarchy levels (starting from top, instance, or subcircuit scope) to be checked. Default is 8.

© 2003-2020 All Rights Reserved.

Parameter Index

In the following index, the number corresponding to each parameter name indicates where to find the description of that parameter.

depth 13 model 1 vnth 6 xsubckt 12

error_limit 8 pwl_time 7 vpth 5

inst 9 rpt_node 2 vt 4

mode 3 subckt 11 xinst 10

© 2003-2020 All Rights Reserved.

Static Always Conducting NMOSFET Check (static_nmosvgs)

Description

Reports the NMOS devices that are potentially always conducting due to connectivity problems.

The following conditions are checked, and an error is reported if they are fulfilled:
NMOS: min(Vg) > min (Vs/Vd) + abs(vt)

The results are written to the static.xml file, which can be viewed in a Web browser. This check is supported only by Spectre XPS.

For additional information, refer to the *Static Always Conducting NMOS/PMOS Check* section in the *Spectre Classic Simulator, Spectre APS, Spectre X, and Spectre XPS User Guide*.

Definition

```
Name static_nmosvgs parameter=value ...
```

Parameters

Design check parameters

1	`model="[...]"`	MOSFET device model names to be checked.
2	`vt=0.0v`	MOSFET voltage threshold. Default is `0.0v`.
3	`rpt_node=no`	Report node voltages. Possible values are `no`, `all`, `top` and `selected`.

© 2003-2020 All Rights Reserved.

Digitize parameters

4	`vpth=-0.4 V`	PMOS threshold voltage. This value is used to calculate the voltage drop across a PMOS channel during voltage propagation. Default is `-0.4 V`.
5	`vnth=0.5 V`	NMOS threshold voltage. This value is used to calculate the voltage drop across a NMOS channel during voltage propagation. Default is `0.5 V`.
6	`pwl_time=infinity`	Time for pwl src to be considered as constant vsrc.

Filtering parameters

7	`error_limit=10000`	Maximum number of errors reported. Default is `10000`.

Wildcard scoping

8	`inst=[...]`	Subcircuit instances to which the check is applied. Default includes all instances (inst=*).
9	`xinst=[...]`	Subcircuit instances to be excluded from the check. Default is none.
10	`subckt=[...]`	The instances of the specified subcircuit to which the check is applied. Default includes all subcircuits (subckt=*).
11	`xsubckt=[...]`	The instances of the specified subcircuits that are excluded from the check. Default is none.
12	`depth=8`	Hierarchy levels (starting from top, instance, or subcircuit scope) to be checked. Default is 8.

© 2003-2020 All Rights Reserved.

Parameter Index

In the following index, the number corresponding to each parameter name indicates where to find the description of that parameter.

depth 12	model 1	subckt 10	vt 2
error_limit 7	pwl_time 6	vnth 5	xinst 9
inst 8	rpt_node 3	vpth 4	xsubckt 11

Static PMOS to gnd count (static_pmos2gnd)

Description

This checks counts the unpaired PMOS in a discharging path from the fanout node to GND and report paths that have a PMOS count greater than the specified count.

The check analyzes the fanout nodes only. It does not check the nodes that connect to MOSDIODEs or MOSCAPs.

The results are written to a file with the extension `static.xml`, which can be viewed in a web browser.

Definition

```
Name static_pmos2gnd parameter=value ...
```


© 2003-2020 All Rights Reserved.

Parameters

Design check parameters

1	`node="[...]"`	Nodes to which the check is applied. Default is none.

Filtering parameters

2	`count=3`	Maximum number of permitted PMOS. Default is 3.

Wildcard scoping

3	`inst=[...]`	Subcircuit instances to which the check is applied. Default includes all instances (inst=*).
4	`xinst=[...]`	Subcircuit instances to be excluded from the check. Default is none.
5	`subckt=[...]`	The instances of the specified subcircuit to which the check is applied. Default includes all subcircuits (subckt=*).
6	`xsubckt=[...]`	The instances of the specified subcircuits that are excluded from the check. Default is none.
7	`depth=8`	Hierarchy levels (starting from top, instance, or subcircuit scope) to be checked. Default is 8.

© 2003-2020 All Rights Reserved.

Static PMOS Forward Bias Bulk Check (static_pmosb)

Description

Reports the PMOS devices with a forward-biased bulk condition.

A violation is generated when the bulk bias voltage meets the following conditions:

- when `mode` = `definite`:

```
max( Vb ) <= max( Vd, Vs ) - abs( vt )
```

- when `mode` = `possible`:

```
min( Vb ) <= max( Vd, Vs ) - abs( vt )
```

The results are written to the static.xml file, which can be viewed in a Web browser. This check is supported only by Spectre XPS and Spectre APS.

For additional information, refer to the *Static NMOS/PMOS Forward Bias Bulk Check* section in the *Spectre Classic Simulator, Spectre APS, Spectre X, and Spectre XPS User Guide*.

Definition

```
Name static_pmosb parameter=value ...
```

Parameters

Design check parameters

1	`model="[...]"`	MOSFET device model names to be checked.
2	`rpt_node=no`	Report node voltages. Possible values are `no`, `all`, `top` and `selected`.
3	`mode=definite`	Mode `possible` will report all possible violations. Mode `definite` will report definite violations. Default is `definite`. Possible values are `definite` and `possible`.
4	`vt=0.3 V`	Threshold for p-n junction being checked. Default is 0.3V.

© 2003-2020 All Rights Reserved.

Digitize parameters

5	`vpth=-0.4 V`	PMOS threshold voltage. This value is used to calculate the voltage drop across a PMOS channel during voltage propagation. Default is `-0.4 V`.
6	`vnth=0.5 V`	NMOS threshold voltage. This value is used to calculate the voltage drop across a NMOS channel during voltage propagation. Default is `0.5 V`.
7	`pwl_time=infinity`	Time for pwl src to be considered as constant vsrc.

Filtering parameters

8	`error_limit=10000`	Maximum number of errors reported. Default is `10000`.

Wildcard scoping

9	`inst=[...]`	Subcircuit instances to which the check is applied. Default includes all instances (`inst=*`).
10	`xinst=[...]`	Subcircuit instances to be excluded from the check. Default is `none`.
11	`subckt=[...]`	The instances of the specified subcircuit to which the check is applied. Default includes all subcircuits (`subckt=*`).
12	`xsubckt=[...]`	The instances of the specified subcircuits that are excluded from the check. Default is `none`.
13	`depth=8`	Hierarchy levels (starting from top, instance, or subcircuit scope) to be checked. Default is `8`.

© 2003-2020 All Rights Reserved.

Parameter Index

In the following index, the number corresponding to each parameter name indicates where to find the description of that parameter.

depth 13
error_limit 8
inst 9
mode 3
model 1
pwl_time 7
rpt_node 2
subckt 11
vnth 6
vpth 5
vt 4
xinst 10
xsubckt 12

© 2003-2020
All Rights Reserved.

Static Always Conducting PMOSFET Check (static_pmosvgs)

Description

Reports the PMOS devices potentially always conducting due to connectivity problems.

The following conditions are checked, and an error is reported if they are fulfilled:
PMOS: max(Vg) < max (Vs/Vd) - abs(vt)

The results are written to the static.xml file, which can be viewed in a Web browser. This check is supported only by Spectre XPS.

For additional information, refer to the *Static Always Conducting NMOS/PMOS Check* section in the *Spectre Classic Simulator, Spectre APS, Spectre X, and Spectre XPS User Guide*.

Definition

```
Name static_pmosvgs parameter=value ...
```

Parameters

Design check parameters

1	`model="[...]"`	MOSFET device model names to be checked.
2	`vt=0.0 V`	MOSFET voltage threshold. Default is `0.0V`.
3	`rpt_node=no`	Report node voltages. Possible values are `no`, `all`, `top` and `selected`.

Digitize parameters

4	`vpth=-0.4 V`	PMOS threshold voltage. This value is used to calculate the voltage drop across a PMOS channel during voltage propagation. Default is `-0.4 V`.

© 2003-2020 All Rights Reserved.

5	`vnth=0.5 V`	NMOS threshold voltage. This value is used to calculate the voltage drop across a NMOS channel during voltage propagation. Default is `0.5 V`.
6	`pwl_time=infinity`	Time for pwl src to be considered as constant vsrc.

Filtering parameters

7	`error_limit=10000`	Maximum number of errors reported. Default is `10000`.

Wildcard scoping

8	`inst=[...]`	Subcircuit instances to which the check is applied. Default includes all instances (`inst=*`).
9	`xinst=[...]`	Subcircuit instances to be excluded from the check. Default is `none`.
10	`subckt=[...]`	The instances of the specified subcircuit to which the check is applied. Default includes all subcircuits (`subckt=*`).
11	`xsubckt=[...]`	The instances of the specified subcircuits that are excluded from the check. Default is `none`.
12	`depth=8`	Hierarchy levels (starting from top, instance, or subcircuit scope) to be checked. Default is `8`.

Parameter Index

In the following index, the number corresponding to each parameter name indicates where to find the description of that parameter.

`depth 12` `model 1` `subckt 10` `vt 2`

`error_limit 7` `pwl_time 6` `vnth 5` `xinst 9`

© 2003-2020 All Rights Reserved.

```
inst  8          rpt_node  3        vpth  4          xsubckt  11
```


© 2003-2020 All Rights Reserved.

Static RCDelay Check (static_rcdelay)

Description

Reports nodes with excessive rise or fall times. Rise and fall times are based on estimation.

Only the fanout nodes are analyzed. Nodes connecting to MOSDIODEs or MOSCAPs are not checked. The check reports either the top worst case rise/fall times (`maxnrise`, `maxnfall`) or nodes with rise/fall times above the user-defined thresholds (`maxtrise`, `maxtfall`). In addition, the check reports the driving MOSFETs and the receiving MOSFET (gate connected to the analyzed node) for each node.

The results are reported into a file with the extension static.xml, which can be read with a web browser.

For additional information, refer to the *Static RC Delay Check* section in the *Spectre Classic Simulator, Spectre APS, Spectre X, and Spectre XPS User Guide*.

Definition

```
Name static_rcdelay parameter=value ...
```

Parameters

Design check parameters

1	`node="[...]"`	Nodes to which the check is applied. Default is `none`.
2	`detailed_path=no`	Report all possible (`yes`) or worst case (`no`) rise/fall time per node. Possible values are `yes` and `no`.
3	`fanoutmargin=[0.1 0.9]`	Relative fanout level (in ratio of VDD voltage) for which rise and fall time is measured. The range of values is `[0.01 0.99]`. Lower margin should be less than the higher margin.

© 2003-2020 All Rights Reserved.

Filtering parameters

4	`cmin=1e-14`	Node capacitance threshold. Only nodes with total capacitance higher than the specified value are reported. Default is 1e-14.
5	`maxnrise=0`	Report the top number nodes with highest rise-time. Default is none.
6	`minnrise=0`	Report the bottom number nodes with lowest rise-time. Default is none.
7	`maxnfall=0`	Report the top number nodes with highest fall-time. Default is none.
8	`minnfall=0`	Report the bottom number nodes with lowest fall-time. Default is none.
9	`maxtrise=infinity`	Report only those node names with rise time higher than the specified value. Default is infinity.
10	`mintrise=0`	Report only those node names with rise time lower than the specified value. Default is none.
11	`maxtfall=infinity`	Report only those node names with fall time higher than the specified value. Default is infinity.
12	`mintfall=0`	Report only those node names with fall time lower than the specified value. Default is none.

Wildcard scoping

13	`inst=[...]`	Subcircuit instances to which the check is applied. Default includes all instances (`inst=*`).
14	`xinst=[...]`	Subcircuit instances to be excluded from the check. Default is `none`.
15	`subckt=[...]`	The instances of the specified subcircuit to which the check is applied. Default includes all subcircuits (`subckt=*`).
16	`xsubckt=[...]`	The instances of the specified subcircuits that are excluded from the check. Default is `none`.

© 2003-2020 All Rights Reserved.

17	`depth=8`	Hierarchy levels (starting from top, instance, or subcircuit scope) to be checked. Default is `8`.

Parameter Index

In the following index, the number corresponding to each parameter name indicates where to find the description of that parameter.

cmin 4	inst 13	maxtrise 9	mintrise 10
xsubckt 16	depth 17	maxnfall 7	minnfall 8
node 1	detailed_path 2	maxnrise 5	minnrise 6
subckt 15	fanoutmargin 3	maxtfall 11	mintfall 12
xinst 14			

© 2003-2020 All Rights Reserved.

Static Resistor Check (static_resistor)

Description

Reports all resistors within or outside the range of `rmin` and `rmax`. It can also generate a distribution list of all the resistors in a circuit.

If the `type` parameter is set to range, all the resistors outside the range of `rmin` and `rmax` will be reported. If the `type` parameter is set to `print`, all the resistors between `rmin` and `rmax` will be reported. In the report, the resistor names can be sorted by clicking on the `Device name` header in the Web browser.

If the `type` parameter is set to `distr`, a distribution list will be generated for all resistors. There are a maximum of 12 bins: -Inf - 0, 0 - 1m, 1m - 10m, 10m - 0.1, 0.1 - 1, 1 - 10, 10 - 100, 100 - 1k, 1k - 10k, 10k - 100k, 100k - 1Meg , and 1Meg - Inf

However, if two or more consecutive bins are empty, they will merge into one bin, reducing the number of bins. If type is set to `distr`, the parameters `rmin`, `rmax` and `error_limit` are ignored.

The results are reported into the static.xml file, which can be viewed in a Web browser. This check is supported only by Spectre XPS.

For additional information, refer to the *Static Resistor Check* section in the *Spectre Classic Simulator, Spectre APS, Spectre X, and Spectre XPS User Guide*.

Definition

```
Name static_resistor parameter=value ...
```

Parameters

Design check parameters

1	`type=print`	Checking types. Possible values are `range`, `distr`, and `print`.
2	`rmin=-1000E9` Ω	Minimum resistor value.
3	`rmax=1000E9` Ω	Maximum resistor value.

© 2003-2020 All Rights Reserved.

Filtering parameters

4	`error_limit=10000`	Maximum number of errors reported. Default is `10000`.

© 2003-2020 All Rights Reserved.

Static Resistor Voltage Check (static_resv)

Description

Reports the resistor devices fulfilling the conditional expression on device voltages.

Supported resistor variables are: v(1,2), v(1), and v(2)

Supported operators are: +, -,*, /, ==,!=, <, <=, >, >=,||, &&, and !

The results are written to the static.xml file, which can be viewed in a Web browser. This check is supported only by Spectre XPS.

For additional information, refer to the *Static Resistor Voltage Check* section in the *Spectre Classic Simulator, Spectre APS, Spectre X, and Spectre XPS User Guide*.

Definition

```
Name static_resv parameter=value ...
```

Parameters

Design check parameters

1	`cond`	The conditional expression to be fulfilled. Default is none.
2	`rpt_node=no`	Report node voltages. Possible values are `no`, `all`, `top` and `selected`.

Digitize parameters

3	`vpth=-0.4 V`	PMOS threshold voltage. This value is used to calculate the voltage drop across a PMOS channel during voltage propagation. Default is `-0.4 V`.

© 2003-2020 All Rights Reserved.

4	`vnth=0.5 V`	NMOS threshold voltage. This value is used to calculate the voltage drop across a NMOS channel during voltage propagation. Default is `0.5 V`.
5	`pwl_time=infinity`	Time for pwl src to be considered as constant vsrc.

Filtering parameters

6	`error_limit=10000`	Maximum number of errors reported. Default is `10000`.

Wildcard scoping

7	`inst=[...]`	Subcircuit instances to which the check is applied. Default includes all instances (inst=*).
8	`xinst=[...]`	Subcircuit instances to be excluded from the check. Default is none.
9	`subckt=[...]`	The instances of the specified subcircuit to which the check is applied. Default includes all subcircuits (subckt=*).
10	`xsubckt=[...]`	The instances of the specified subcircuits that are excluded from the check. Default is none.
11	`depth=8`	Hierarchy levels (starting from top, instance, or subcircuit scope) to be checked. Default is 8.

Parameter Index

In the following index, the number corresponding to each parameter name indicates where to find the description of that parameter.


```
cond  1            inst  7            subckt  9          xinst  8

depth  11          pwl_time  5        vnth  4            xsubckt  10

error_limit  6     rpt_node  2        vpth  3
```


© 2003-2020 All Rights Reserved.

Static Subckt Port Voltage Check (static_subcktport)

Description

Reports instances of the user-specified `subckt` fulfilling the conditional expression on port voltages.Only one subckt is allowed per statement.

Voltages of a port can be referenced by the port name of a subcircuit. For example, consider the subcircuit definition `subckt INV port_A  port_B`. Here, supported port names are: `v(port_A)`, `v(port_B)` and `v(port_A,port_B)`.

Supported operators are: +, -,*, /, ==,!=, <, <=, >, >=,||, &&, and !

All design instances of the subcircuit specified in `subckt` will be checked.

The results are written to the dynamic.xml file, which can be viewed in a Web browser.

For additional information, refer to the *Static Subcircuit Port Voltage Check* section in the *Spectre Classic Simulator, Spectre APS, Spectre X, and Spectre XPS User Guide*.

Definition

```
Name static_subcktport parameter=value ...
```


© 2003-2020 All Rights Reserved.

Parameters

Design check parameters

1	`subckt`	Instances of the specified subcircuit to which the check is applied. Wildcard is not supported. Only one subcircuit is allowed per statement. Default is none.
2	`cond`	The conditional expression to be fulfilled. Default is none.
3	`vpth=-0.4 V`	PMOS threshold voltage. This value is used to calculate the voltage drop across a PMOS channel during voltage propagation. Default is -0.4 V.
4	`vnth=0.5 V`	NMOS threshold voltage. This value is used to calculate the voltage drop across a NMOS channel during voltage propagation. Default is 0.5 V.
5	`pwl_time=infinity`	Time for pwl source to be considered as constant vsource.

Filtering parameters

6	`error_limit=10000`	Maximum number of errors reported. Default is 10000.

© 2003-2020 All Rights Reserved.

Static Transmission Gate Check (static_tgate)

Description

Reports the transmission gates which cause potential leakage currents between power supplies. These gates can be characterized by their node connectivity, based on the following:

- Nodes that connect to the gate and NMOS drain/source terminals, but not to the PMOS drain/source terminals
- Nodes that connect to the gate and PMOS drain/source terminals, but not to the NMOS drain/source terminals

The results are written to the static.xml file, which can be viewed in a Web browser. This check is supported only by Spectre XPS.

For additional information, refer to the *Static Transmission Gate Check* section in the *Spectre Classic Simulator, Spectre APS, Spectre X, and Spectre XPS User Guide*.

Definition

```
Name static_tgate parameter=value ...
```

Parameters

Design check parameters

1	`node="[...]"`	Nodes to which the check is applied. Default is `none`.

Filtering parameters

2	`error_limit=10000`	Maximum number of errors reported. Default is `10000`.

© 2003-2020 All Rights Reserved.

Wildcard scoping

3	`inst=[...]`	Subcircuit instances to which the check is applied. Default includes all instances (`inst=*`).
4	`xinst=[...]`	Subcircuit instances to be excluded from the check. Default is `none`.
5	`subckt=[...]`	The instances of the specified subcircuit to which the check is applied. Default includes all subcircuits (`subckt=*`).
6	`xsubckt=[...]`	The instances of the specified subcircuits that are excluded from the check. Default is `none`.
	`depth=8`	Hierarchy levels (starting from top, instance, or subcircuit scope) to be checked. Default is `8`.

Parameter Index

In the following index, the number corresponding to each parameter name indicates where to find the description of that parameter.

depth 11	inst_file 4	subckt_file 8	xsubckt 9
error_limit 2	node 1	xinst 5	xsubckt_file 10
inst 3	subckt 7	xinst_file 6	

© 2003-2020 All Rights Reserved.

Static Voltage Domain Conflict Check (static_vconflict)

Description

Reports low voltage domain driving MOSFET devices from high voltage domain.

Fanout violations - Reports PMOS and depletion NMOS of higher voltage domain driven by MOSFET devices of low voltage domain.

MultiDC violations - Reports Muiti-DC sources and their connecting path elements.

The results are written to the static.xml file, which can be viewed in a Web browser.

This check is supported only by Spectre XPS and Spectre APS.

Definition

```
Name static_vconflict parameter=value ...
```


© 2003-2020 All Rights Reserved.

Parameters

Design check parameters

1	`rpt_node=no`	Report node voltages.Possible values are `no`, `all`, `top` and `selected`.

Digitize parameters

1	`vpth=-0.4 V`	PMOS threshold voltage. This value is used to calculate the voltage drop across a PMOS channel during voltage propagation. Default is `-0.4 V`.
2	`vnth=0.5 V`	NMOS threshold voltage. This value is used to calculate the voltage drop across a NMOS channel during voltage propagation. Default is `0.5 V`.
3	`pwl_time`	Time for pwl src to be considered as constant vsrc.

Filtering parameters

4	`error_limit=10000`	Maximum number of errors reported. Default is `10000`.

© 2003-2020 All Rights Reserved.

Static Voltage Domain Device Check (static_voltdomain)

Description

Reports the high voltage driving the low-voltage MOSFET and low voltage driving the high-voltage MOSFET

The results are written to the static.xml file, which can be viewed in a Web browser. This check is supported only by Spectre XPS and Spectre APS.

For additional information, refer to the *Static Voltage Domain Device Check* section in the *Spectre Classic Simulator, Spectre APS, Spectre X, and Spectre XPS User Guide*.

Definition

```
Name static_voltdomain parameter=value ...
```

Parameters

Design check parameters

1	`model=[...]`	MOSFET device model names to be checked. By default all types of MOSFETs are checked.
2	`rpt_node=no`	Report node voltages. Possible values are `no`, `all`, `top` and `selected`.

Digitize parameters

3	`pwl_time=infinity`	Time for pwl src to be considered as constant vsrc.

Filtering parameters

4	`error_limit=10000`	Maximum number of errors reported. Default is `10000`.

© 2003-2020 All Rights Reserved.

Wildcard scoping

5	`inst=[...]`	Subcircuit instances to which the check is applied. Default includes all instances (inst=*).
6	`xinst=[...]`	Subcircuit instances to be excluded from the check. Default is none.
7	`subckt=[...]`	The instances of the specified subcircuit to which the check is applied. Default includes all subcircuits (subckt=*).
8	`xsubckt=[...]`	The instances of the specified subcircuits that are excluded from the check. Default is none.
9	`depth=8`	Hierarchy levels (starting from top, instance, or subcircuit scope) to be checked. Default is 8.

Parameter Index

In the following index, the number corresponding to each parameter name indicates where to find the description of that parameter.

`depth 9`	`model 1`	`subckt 7`
`error_limit 4`	`pwl_time 3`	`xinst 6`
`inst 5`	`rpt_node 2`	`xsubckt 8`

© 2003-2020 All Rights Reserved.

© 2003-2020 All Rights Reserved.

A

References

This section gives additional details about the source documents referred to in the text.

- *[antognetti88] Paolo Antognetti, Giuseppe Massobrio. Semiconductor Device Modeling with SPICE. McGraw-Hill, New York, 1988.*
- *[gear71] C. William Gear. Numerical Initial Value Problems in Ordinary Differential Equations. Prentice-Hall, 1971.*
- *[hammerstad80] E. Hammerstad, O. Jensen. "Accurate models for microstrip computer-aided design." IEEE MTT-S 1980 International Microwave Symposium Digest, pages 407-409.*
- *[jansen83] Rolf H. Jansen, Martin Kirschning. "Arguments and an accurate model for the power-current formulation of microstrip characteristic impedance." Arch. Elek. Ubertragung (AEU), vol. 37, 1983, pages 108-112.*
- *[kirschning82] M. Kirschning, R. H. Jansen. "Accurate model for effective dielectric constant of microstrip with validity up to millimetre-wave frequencies." Electronic Letters, vol. 18, no. 6, 18 March 1982, pages 272-273.*
- *[kundert90]Kenneth S. Kundert, Jacob K. White, Alberto Sangiovanni-Vincentelli. Steady-State Methods for Simulating Analog and Microwave Circuits. Kluwer Academic Publishers, 1990.*
- *[nagel75]Laurence W. Nagel. SPICE2: A Computer Program to Simulate Semiconductor Circuits. Ph. D. dissertation, University of California at Berkeley, May 1975. Available through Electronics Research Laboratory Publications, U. C. B., 94720; Memorandum No. UCB/ERL M520.*
- *[quarles89] Thomas L. Quarles. Analysis of Performance and Convergence Issues for Circuit Simulation. Ph. D. dissertation, University of California at Berkeley, April 1989. Extensively documents the Spice3 program. Available through Electronics Research Laboratory Publications, U. C. B., 94720; Memorandum No. UCB/ERL M89/42.*

© 2003-2020 All Rights Reserved.

- *[statz87]Hermann Statz, Paul Newman, Irl W. Smith, Robert A. Pucel, Hermann A. Haus. “GaAs FET device and circuit simulation in SPICE.” IEEE Transactions on Electron Devices, vol. ED-34, no. 2, pages 160-169, February 1987.*
- *[vladimirescu81]A. Vladimirescu, Kaihe Zhang, A. R. Newton, D. O. Pederson, A. Sangiovanni-Vincentelli. SPICE Version 2G User’s Guide, August 1981. Available through Industrial Liaison Program Software Distribution office, Department of Electrical Engineering and Computer Sciences, University of California at Berkeley, 94720.*
- *[yang82]Ping Yang, Pallab K. Chatterjee. “SPICE modeling for small geometry MOSFET circuits.” IEEE Transactions on Computer-Aided Design of Integrated Circuits and Systems, vol. CAD-1, no. 4, pages 169-182, October 1982.*

© 2003-2020 All Rights Reserved.

Index

Symbols

%S_DEFAULTS 41
%X (+/-), spectre command option 30
+/-interactive, spectre command option 33

A

ac
  analysis
    definition 45
    description 45
    parameters 45
AC Analysis analyses 45
ac(AC Analysis) 45
acmatch
  analysis
    definition 51
    description 51
    parameters 51
ACMatch Analysis analyses 51
acmatch(ACMatch Analysis) 51
-alias, spectre command option 32
alter
  analysis
    definition 56
    description 56
    parameters 56
Alter a Circuit, Component, or Netlist Parameter analyses 56
Alter Group analyses 58
alter(Alter a Circuit, Component, or Netlist Parameter) 56
altergroup
  analysis
    definition 58
    description 58
    parameters 59
altergroup(Alter Group) 58
analogmodel
  other
    description 459
analogmodel(Using analogmodel for Model Passing) 459
analyses
  AC Analysis 45
  ACMatch Analysis 51
  Alter a Circuit, Component, or Netlist Parameter 56
  Alter Group 58
  Check Parameter Values 61
  Checklimit Analysis 62
  Circuit Information 151
  DC Analysis 66
  DC Device Matching Analysis 72
  Deferred Set Options 386
  Envelope Following Analysis 78
  Harmonic Balance Steady State Analysis 92
  HB AC Analysis 113
  HB Noise Analysis 121
  HB S-Parameter Analysis 132
  HB Stability Analysis 140
  HB XF Analysis 144
  Immediate Set Options 188
  Load Pull Analysis 163
  Monte Carlo Analysis 166
  Noise Analysis 182
  Periodic AC Analysis 251
  Periodic Noise Analysis 259
  Periodic S-Parameter Analysis 270
  Periodic STB Analysis 304
  Periodic Steady-State Analysis 278
  Periodic Transfer Function Analysis 309
  PZ Analysis 318
  Quasi-Periodic AC Analysis 324
  Quasi-Periodic Noise Analysis 329
  Quasi-Periodic S-Parameter Analysis 337
  Quasi-Periodic Steady State Analysis 345
  Quasi-Periodic Transfer Function Analysis 362
  Reliability Analysis 368
  Setting for Simulink-MATLAB co-simulation 65
  Shell Command 393
  S-Parameter Analysis 394
  Special current saving options 444
  Stability Analysis 400
  Sweep Analysis 413
  THERMAL Analysis 420

© 2003-2020 All Rights Reserved.

Time-Domain Reflectometer Analysis 418
Transfer Function Analysis 446
analysis
definition
(ac) 45
(acmatch) 51
(alter) 56
(altergroup) 58
(check) 61
(checklimit) 62
(cosim) 65
(dc) 66
(dcmatch) 72
(envlp) 79
(hb) 92
(hbac) 113
(hbnoise) 123
(hbsp) 132
(hbstb) 140
(hbxf) 144
(info) 151
(lf) 157
(loadpull) 163
(montecarlo) 167
(noise) 183
(options) 188
(pac) 251
(pnoise) 261
(psp) 270
(pss) 279
(pstb) 304
(pxf) 309
(pz) 318
(qpac) 324
(qpnoise) 331
(qpsp) 337
(qpss) 346
(qpxf) 362
(reliability) 368
(set) 386
(shell) 393
(sp) 394
(stb) 400, 408
(sweep) 413
(tdr) 418
(thermal) 420
(tran) 423
(uti) 444
(xf) 447
description
(ac) 45
(acmatch) 51
(alter) 56
(altergroup) 58
(check) 61
(checklimit) 62
(cosim) 65
(dc) 66
(dcmatch) 72
(envlp) 78
(hb) 92
(hbac) 113
(hbnoise) 121
(hbsp) 132
(hbstb) 140
(hbxf) 144
(info) 151
(loadpull) 163
(montecarlo) 166
(noise) 182
(options) 188
(pac) 251
(pnoise) 259
(psp) 270
(pss) 278
(pstb) 304
(pxf) 309
(pz) 318
(qpac) 324
(qpnoise) 329
(qpsp) 337
(qpss) 345
(qpxf) 362
(reliability) 368
(set) 386
(shell) 393
(sp) 394
(stb) 400
(sweep) 413
(tdr) 418
(tran) 423
(uti) 444
(xf) 446
parameters
(ac) 45
(acmatch) 51
(alter) 56
(altergroup) 59
(check) 61
(checklimit) 62
(cosim) 65

© 2003-2020 All Rights Reserved.

(dc) 66
(dcmatch) 73
(envlp) 79
(hb) 93
(hbac) 114
(hbnoise) 123
(hbsp) 132
(hbstb) 141
(hbxf) 144
(info) 152
(loadpull) 163
(montecarlo) 167
(noise) 183
(options) 188
(pac) 252
(pnoise) 261
(psp) 270
(pss) 279
(pstb) 305
(pxf) 309
(pz) 318
(qpac) 324
(qpnoise) 331
(qpsp) 337
(qpss) 346
(qpxf) 362
(reliability) 368
(set) 386
(shell) 393
(sp) 394
(stb) 400, 408
(sweep) 413
(tdr) 418
(thermal) 420
(tran) 423
(uti) 445
(xf) 447
attached simulator control 31

B

Behavioural Source Use Model other 461
bsource
other
description 461
bsource(Behavioural Source Use Model) 461
Built-in Mathematical and Physical Constants other 474

C

C preprocessor (CPP) control 32
check
analysis
definition 61
description 61
parameters 61
Check Parameter Values analyses 61
check(Check Parameter Values) 61
checker
definition
(dyn_activity) 563
(dyn_actnode) 565
(dyn_capv) 567
(dyn_dcpath) 569
(dyn_delay) 572
(dyn_diodev) 575
(dyn_exi) 577
(dyn_exrf) 579
(dyn_float_tran_stat) 592
(dyn_floatdcpath) 584
(dyn_glitch) 597
(dyn_highz) 600
(dyn_mosv) 605
(dyn_nodecap) 607
(dyn_noisynode) 609
(dyn_pulsewidth) 612
(dyn_resv) 615
(dyn_setuphold) 617
(dyn_stahighz) 620
(dyn_subcktport) 623
(dyn_subcktpwr) 625
(static_capacitor) 628
(static_capv) 630
(static_coupling) 632
(static_dcpath) 635
(static_diodev) 637
(static_erc) 639
(static_highfanout) 642
(static_highz) 645
(static_mosv) 648
(static_nmos2vdd) 651
(static_nmosb) 652
(static_nmosvgs) 655
(static_pmos2gnd) 657
(static_pmosb) 659
(static_pmosvgs) 662
(static_rcdelay) 665
(static_resistor) 668

© 2003-2020 All Rights Reserved.

(static_resv) 670
(static_subcktport) 672
(static_tgate) 674
(static_vconflict) 676
(static_voltdomain) 678
description
(dyn_actnode) 565
(dyn_capv) 563, 567
(dyn_dcpath) 569
(dyn_delay) 572
(dyn_diodev) 575
(dyn_exi) 577
(dyn_exrf) 579
(dyn_float_tran_stat) 591
(dyn_floatdcpath) 582
(dyn_glitch) 597
(dyn_highz) 600
(dyn_mosv) 605
(dyn_nodecap) 607
(dyn_noisynode) 609
(dyn_pulsewidth) 612
(dyn_resv) 615
(dyn_setuphold) 617
(dyn_stahighz) 620
(dyn_subcktport) 623
(dyn_subcktpwr) 625
(static_capacitor) 628
(static_capv) 630
(static_coupling) 632
(static_dcpath) 635
(static_diodev) 637
(static_erc) 639
(static_highfanout) 642
(static_highz) 645
(static_mosv) 648
(static_nmos2vdd) 651
(static_nmosb) 652
(static_nmosvgs) 655
(static_pmos2gnd) 657
(static_pmosb) 659
(static_pmosvgs) 662
(static_rcdelay) 665
(static_resistor) 668
(static_resv) 670
(static_subcktport) 672
(static_tgate) 674
(static_vconflict) 676
(static_voltdomain) 678
parameters
(dyn_activity) 563
(dyn_actnode) 565
(dyn_capv) 567
(dyn_dcpath) 570
(dyn_delay) 572
(dyn_diodev) 575
(dyn_exi) 577
(dyn_exrf) 579
(dyn_float_tran_stat) 593
(dyn_floatdcpath) 585
(dyn_glitch) 597
(dyn_highz) 600
(dyn_mosv) 605
(dyn_nodecap) 607
(dyn_noisynode) 609
(dyn_pulsewidth) 612
(dyn_resv) 615
(dyn_setuphold) 617
(dyn_stahighz) 621
(dyn_subcktport) 623
(dyn_subcktpwr) 625
(static_capacitor) 628
(static_capv) 630
(static_coupling) 633
(static_dcpath) 635
(static_diodev) 637
(static_erc) 639
(static_highfanout) 643
(static_highz) 645
(static_mosv) 648
(static_nmos2vdd) 651
(static_nmosb) 652
(static_nmosvgs) 655
(static_pmos2gnd) 658
(static_pmosb) 659
(static_pmosvgs) 662
(static_rcdelay) 665
(static_resistor) 668
(static_resv) 670
(static_subcktport) 673
(static_tgate) 674
(static_vconflict) 677
(static_voltdomain) 678
checkers
Dynamic Capacitor Voltage Check Violations 567
Dynamic DC Leakage Path Check Violations 569
Dynamic Delay Check 572
Dynamic Diode Voltage Check 575
Dynamic Excessive Element Current Check Violations 577
Dynamic Excessive Rise, Fall, Undefined

© 2003-2020 All Rights Reserved.

State Time Check Violations 579
Dynamic Floating Node Induced DC Leakage Path Check Violations 582
Dynamic Floating Node Statistical Check 591
Dynamic Glitch Check Violations 597
Dynamic HighZ Node Check Violations 600
Dynamic MOSFET Voltage Check Violations 605
Dynamic Node Capacitance Check 607
Dynamic Noisy Node Check Violations 609
Dynamic Pulse Width Check 612
Dynamic Resistor Voltage Check Violations 615
Dynamic Setup and Hold Check Violations 617
Dynamic Statistical HighZ Node Check 620
Dynamic Subckt Instance Activity Check 563
Dynamic Subckt Port Power Check Violations 625
Dynamic Subckt Port voltage/current Check 623
Static Always Conducting MOSFET Check Violations 655, 662
Static Capacitor Check Violations 628
Static Capacitor Voltage Check Violations 630
Static Coupling Impact Check 632
Static DC Leakage Path Check Violations 635
Static Diode Voltage Check 637
Static ERC Check Violations 639
Static Forward Bias Bulk Check Violations 652, 659
Static Highfanout Check 642
Static HighZ Node Check Violations 645
Static MOSFET Voltage Check Violations 648
Static PMOS to gnd count 657
Static RCDelay Check 665
Static Resistor Check Violations 668
Static Resistor Voltage Check Violations 670
Static Subckt Port Voltage Check 672
Static Transmission Gate Check Violations 674
Static Voltage Domain Conflict Check 676
Static Voltage Domain Device Check Violations 678
checklimit
analysis
definition 62
description 62
parameters 62
Checklimit Analysis analyses 62
checklimit(Checklimit Analysis) 62
Checkpoint - Restart other 470
checkpoint (+/-), spectre command option 29
checkpoint and recovery 29
checkpoint(Checkpoint - Restart) 470
Circuit Information analyses 151
cmiconfig
other
description 472
cmiconfig(Configuring CMI Shared Objects) 472
-cols, spectre command option 30
-colslog, spectre command option 30
Configuring CMI Shared Objects other 472
constants
other
description 474
constants(Built-in Mathematical and Physical Constants) 474
conventions 12, 13
convergence
other
description 476
Convergence Difficulties other 476
convergence(Convergence Difficulties) 476
cosim
analysis
definition 65
description 65
parameters 65
cosim(Setting for Simulink-MATLAB co-simulation) 65

D

-D, spectre command option 32

© 2003-2020 All Rights Reserved.

dc
analysis
definition 66
description 66
parameters 66
DC Analysis analyses 66
DC Device Matching Analysis analyses 72
dc(DC Analysis) 66
dcmatch
analysis
definition 72
description 72
parameters 73
dcmatch(DC Device Matching Analysis) 72
dcopt
other
definition 478
description 478
debug (+/-), spectre command option 31
defaults of parameter values 41
Deferred Set Options analyses 386
dyn_activity
checker
definition 563
parameters 563
dyn_activity(Dynamic Subckt Instance Activity Check) 563
dyn_actnode
checker
definition 565
description 565
parameters 565
dyn_capv
checker
definition 567
description 563, 567
parameters 567
dyn_capv(Dynamic Capacitor Voltage Check Violations) 567
dyn_dcpath
checker
definition 569
description 569
parameters 570
dyn_dcpath(Dynamic DC Leakage Path Check Violations) 569
dyn_delay
checker
definition 572
description 572
parameters 572
dyn_delay(Dynamic Delay Check) 572
dyn_diodev
checker
definition 575
description 575
parameters 575
dyn_diodev(Dynamic Diode Voltage Check) 575
dyn_exi
checker
definition 577
description 577
parameters 577
dyn_exi(Dynamic Excessive Element Current Check Violations) 577
dyn_exrf
checker
definition 579
description 579
parameters 579
dyn_exrf(Dynamic Excessive Rise, Fall, Undefined State Time Check Violations) 579
dyn_float_tran_stat
checker
definition 592
description 591
parameters 593
dyn_float_tran_stat(Dynamic Floating Node Statistical Check) 591
dyn_floatdcpath
checker
definition 584
description 582
parameters 585
dyn_floatdcpath(Dynamic Floating Node Induced DC Leakage Path Check Violations) 582
dyn_glitch
checker
definition 597
description 597
parameters 597
dyn_glitch(Dynamic Glitch Check Violations) 597
dyn_highz
checker
definition 600
description 600
parameters 600
dyn_highz(Dynamic HighZ Node Check

© 2003-2020 All Rights Reserved.

Violations) 600
dyn_mosv
checker
definition 605
description 605
parameters 605
dyn_mosv(Dynamic MOSFET Voltage Check Violations) 605
dyn_nodecap
checker
definition 607
description 607
parameters 607
dyn_nodecap(Dynamic Node Capacitance Check) 607
dyn_noisynode
checker
definition 609
description 609
parameters 609
dyn_noisynode(Dynamic Noisy Node Check Violations) 609
dyn_pulsewidth
checker
definition 612
description 612
parameters 612
dyn_pulsewidth(Dynamic Pulse Width Check) 612
dyn_resv
checker
definition 615
description 615
parameters 615
dyn_resv(Dynamic Resistor Voltage Check Violations) 615
dyn_setuphold
checker
definition 617
description 617
parameters 617
dyn_setuphold(Dynamic Setup and Hold Check Violations) 617
dyn_stahighz
checker
definition 620
description 620
parameters 621
dyn_stahighz(Dynamic Statistical HighZ Node Check) 620
dyn_subcktport
checker
definition 623
description 623
parameters 623
dyn_subcktport(Dynamic Subckt Port voltage/current Check) 623
dyn_subcktpwr
checker
definition 625
description 625
parameters 625
dyn_subcktpwr(Dynamic Subckt Port Power Check Violations) 625
Dynamic Capacitor Voltage Check Violations checkers 567
Dynamic DC Leakage Path Check Violations checkers 569
Dynamic Delay Check checkers 572
Dynamic Diode Voltage Check checkers 575
Dynamic Excessive Element Current Check Violations checkers 577
Dynamic Excessive Rise, Fall, Undefined State Time Check Violations checkers 579
Dynamic Floating Node Induced DC Leakage Path Check Violations checkers 582
Dynamic Floating Node Statistical Check checkers 591
Dynamic Glitch Check Violations checkers 597
Dynamic HighZ Node Check Violations checkers 600
Dynamic MOSFET Voltage Check Violations checkers 605
Dynamic Node Capacitance Check checkers 607
Dynamic Noisy Node Check Violations checkers 609
Dynamic Pulse Width Check checkers 612
Dynamic Resistor Voltage Check Violations checkers 615
Dynamic Setup and Hold Check Violations checkers 617
Dynamic Statistical HighZ Node Check checkers 620
Dynamic Subckt Instance Activity Check checkers 563
Dynamic Subckt Port Power Check Violations checkers 625

© 2003-2020 All Rights Reserved.

Dynamic Subckt Port voltage/current Check
checkers 623

E

-E, spectre command option 32
encryption
other
description 479
encryption other 479
encryption(encryption) 479
Envelope Following Analysis analyses 78
environment variable
%S_DEFAULTS 41
SPECTRE_DEFAULTS 41
envlp
analysis
definition 79
description 78
parameters 79
envlp(Envelope Following Analysis) 78
error (+/-), spectre command option 30
expressions
other
description 482
Expressions other 482
expressions(Expressions) 482

F

fastdc
other
definition 486
description 486
fastdc(The fastdc command line
option) 486
faults
other
definition 488
description 487
filename replacement 30
-format, spectre command option 29
formatting of results 29
functions
other
definition 489
description 489
functions(User Defined Functions) 489

G

global
other
definition 490
description 490
Global Nodes other 490
global(Global Nodes) 490

H

Harmonic Balance Steady State Analysis
analyses 92
hb
analysis
definition 92
description 92
parameters 93
HB AC Analysis analyses 113
HB Noise Analysis analyses 121
HB S-Parameter Analysis analyses 132
HB Stability Analysis analyses 140
HB XF Analysis analyses 144
hb(Harmonic Balance Steady State
Analysis) 92
hbac
analysis
definition 113
description 113
parameters 114
hbac(HB AC Analysis) 113
hbnoise
analysis
definition 123
description 121
parameters 123
hbnoise(HB Noise Analysis) 121
hbsp
analysis
definition 132
description 132
parameters 132
hbsp(HB S-Parameter Analysis) 132
hbstb
analysis
definition 140
description 140
parameters 141
hbstb(HB Stability Analysis) 140

© 2003-2020 All Rights Reserved.

hbxf
analysis
definition 144
description 144
parameters 144
hbxf(HB XF Analysis) 144
help features online 27
-help, spectre command option 27
-helpfull, spectre command option 28
-helpsort, spectre command option 27
-helpsortfull, spectre command option 28

I

-I, spectre command option 32
ibis
other
description 491
IBIS Component Use Model other 491
ibis(IBIS Component Use Model) 491
ic
other
definition 498
description 498
ic(Initial Conditions) 498
if
other
definition 499
description 499
if(The Structural if-statement) 499
Immediate Set Options analyses 188
include
other
definition 502
description 501
Include File other 501
include(Include File) 501
info
analysis
definition 151
description 151
parameters 152
info (+/-), spectre command option 31
info(Circuit Information) 151
Initial Conditions other 498
italics in syntax 13

K

keywords 12
other
description 503
keywords(Spectre Netlist Keywords) 503

L

lf
analysis
definition 157
library
other
definition 506
description 506
Library - Sectional Include other 506
library(Library - Sectional Include) 506
license manager 32
literal characters 12
Load Pull Analysis analyses 163
loadpull
analysis
definition 163
description 163
parameters 163
loadpull(Load Pull Analysis) 163
log (+/-/=), spectre command option 28

M

memory
other
description 508
memory(Tips for Reducing Memory Usage) 508
message control 30
Monte Carlo Analysis analyses 166
montecarlo
analysis
definition 167
description 166
parameters 167
montecarlo(Monte Carlo Analysis) 166
-mt, spectre command option 32
mts
other
description 509

© 2003-2020 All Rights Reserved.

mts(Multi-Technology Simulation Mode) 509
Multi-Technology Simulation Mode
other 509

N

Netlist Parameters other 514
Node Sets other 510
nodeset
other
definition 510
description 510
nodeset(Node Sets) 510
noise
analysis
definition 183
description 182
parameters 183
Noise Analysis analyses 182
noise(Noise Analysis) 182

O

online help 27
options
analysis
definition 188
description 188
parameters 188
options(Immediate Set Options) 188
other
Behavioural Source Use Model 461
Built-in Mathematical and Physical Constants 474
Checkpoint - Restart 470
Configuring CMI Shared Objects 472
Convergence Difficulties 476
definition
(dcopt) 478
(fastdc) 486
(faults) 488
(functions) 489
(global) 490
(ic) 498
(if) 499
(include) 502
(library) 506
(nodeset) 510
(parameters) 514
(paramset) 517
(postlayout) 518
(save) 525
(sens) 532
(subckt) 543
description
(analogmodel) 459
(bsource) 461
(cmiconfig) 472
(constants) 474
(convergence) 476
(dcopt) 478
(encryption) 479
(expressions) 482
(fastdc) 486
(faults) 487
(functions) 489
(global) 490
(ibis) 491
(ic) 498
(if) 499
(include) 501
(keywords) 503
(library) 506
(memory) 508
(mts) 509
(nodeset) 510
(param_limits) 511
(parameters) 514
(paramset) 517
(postlayout) 518
(rfmemory) 520
(save) 525
(savestate) 528
(sens) 532
(spectrerf) 534
(stitch) 535
(subckt) 541
(vector) 546
(veriloga) 549
encryption 479
Expressions 482
Global Nodes 490
IBIS Component Use Model 491
Include File 501
Initial Conditions 498
Library - Sectional Include 506
Multi-Technology Simulation Mode 509
Netlist Parameters 514
Node Sets 510

© 2003-2020 All Rights Reserved.

Output Selections 525
Parameter Set - Block of Data 517
Parameter Soft Limits 511
Savestate - Recover 528
Sensitivity Analyses 532
Spectre Netlist Keywords 503
SpectreRF Summary 534
Stitch Flow Use Model 535
Subcircuit Definitions 541
The fastdc command line option 486
The postlayout command line option 518
The Structural if-statement 499
Tips for Reducing Memory Usage 508
Tips for Reducing Memory Usage with SpectreRF 520
User Defined Functions 489
Using analogmodel for Model Passing 459
Vec/Vcd/Evcd Digital Stimulus 546
Verilog-A Usage and Language Summary 549
Output Selections other 525

P

pac
analysis
definition 251
description 251
parameters 252
pac(Periodic AC Analysis) 251
param_limits
other
description 511
param_limits(Parameter Soft Limits) 511
-param, spectre command option 28
Parameter Set - Block of Data other 517
Parameter Soft Limits other 511
parameters
default values 41
other
definition 514
description 514
parameters(Netlist Parameters) 514
paramset
other
definition 517
description 517
paramset(Parameter Set - Block of Data) 517
Periodic AC Analysis analyses 251
Periodic Noise Analysis analyses 259
Periodic S-Parameter Analysis analyses 270
Periodic STB Analysis analyses 304
Periodic Steady-State Analysis analyses 278
Periodic Transfer Function Analysis analyses 309
pnoise
analysis
definition 261
description 259
parameters 261
pnoise(Periodic Noise Analysis) 259
postlayout
other
definition 518
description 518
postlayout(The postlayout command line option) 518
psp
analysis
definition 270
description 270
parameters 270
psp(Periodic S-Parameter Analysis) 270
pss
analysis
definition 279
description 278
parameters 279
pss(Periodic Steady-State Analysis) 278
pstb
analysis
definition 304
description 304
parameters 305
pstb(Periodic STB Analysis) 304
pxf
analysis
definition 309
description 309
parameters 309
pxf(Periodic Transfer Function Analysis) 309
pz
analysis
definition 318
description 318

© 2003-2020 All Rights Reserved.

parameters 318
PZ Analysis analyses 318
pz(PZ Analysis) 318

Q

qpac
analysis
definition 324
description 324
parameters 324
qpac(Quasi-Periodic AC Analysis) 324
qpnoise
analysis
definition 331
description 329
parameters 331
qpnoise(Quasi-Periodic Noise Analysis) 329
qpsp
analysis
definition 337
description 337
parameters 337
qpsp(Quasi-Periodic S-Parameter Analysis) 337
qpss
analysis
definition 346
description 345
parameters 346
qpss(Quasi-Periodic Steady State Analysis) 345
qpxf
analysis
definition 362
description 362
parameters 362
qpxf(Quasi-Periodic Transfer Function Analysis) 362
Quasi-Periodic AC Analysis analyses 324
Quasi-Periodic Noise Analysis analyses 329
Quasi-Periodic S-Parameter Analysis analyses 337
Quasi-Periodic Steady State Analysis analyses 345
Quasi-Periodic Transfer Function Analysis analyses 362

R

-raw, spectre command option 29
recover (+/-), spectre command option 30
recovery features 29
reliability
analysis
definition 368
description 368
parameters 368
Reliability Analysis analyses 368
reliability(Reliability Analysis) 368
results formatting 29
rfmemory
other
description 520
rfmemory(Tips for Reducing Memory Usage with SpectreRF) 520

S

save
other
definition 525
description 525
save(Output Selections) 525
savestate
other
description 528
Savestate - Recover other 528
savestate (+/-), spectre command option 29
savestate(Savestate - Recover) 528
screen width control 30
sens
control with spectre command 32
other
definition 532
description 532
sens(Sensitivity Analyses) 532
-sensdata, spectre command option 32
Sensitivity Analyses other 532
set
analysis
definition 386
description 386
parameters 386
set(Deferred Set Options) 386
Setting for Simulink-MATLAB co-simulation

© 2003-2020 All Rights Reserved.

analyses 65
shell
analysis
definition 393
description 393
parameters 393
Shell Command analyses 393
shell(Shell Command) 393
-slave, spectre command option 31
-slvhost, spectre command option 32
sp
analysis
definition 394
description 394
parameters 394
sp(S-Parameter Analysis) 394
S-Parameter Analysis analyses 394
Special current saving options
analyses 444
Spectre
differences from SPICE 16, 27
spectre command 27
attached simulator control 31
C preprocessor (CPP) control 32
checkpoint and recovery 29
defaults
+/- pairs of options 40
filename replacement 30
license manager 32
message control 30
online help features 27
options
-+/-interactive 33
-alias 32
+/-checkpoint 29
-cols 30
-colslog 30
-D 32
+/-debug 31
-E 32
+/-error 30
-format 29
-help 27
-helpfull 28
-helpsort 27
-helpsortfull 28
-I 32
+/-info 31
+/-/=log 28
-mt 32
-param 28
-raw 29
+/-recover 30
+/-savestate 29
-sensdata 32
-slave 31
-slvhost 32
-U 32
-uwifmt 29
-uwilib 29
-V 32
-W 32
+/-warn 30
+/-%X 30
results formatting 29
screen width control 30
sensitivity analysis control 32
version information 32
Spectre Netlist Keywords other 503
SPECTRE_DEFAULTS 41
SpectreRF
brief description 11
spectrerf
other
description 534
SpectreRF Summary other 534
spectrerf(SpectreRF Summary) 534
SPICE
differences from Spectre 16, 27
Stability Analysis analyses 400
statements
AC Analysis 45
ACMatch Analysis 51
Alter a Circuit, Component, or Netlist Parameter 56
Alter Group 58
Behavioural Source Use Model 461
Built-in Mathematical and Physical Constants 474
Check Parameter Values 61
Checklimit Analysis 62
Checkpoint - Restart 470
Circuit Information 151
Configuring CMI Shared Objects 472
Convergence Difficulties 476
DC Analysis 66
DC Device Matching Analysis 72
Deferred Set Options 386
Dynamic Capacitor Voltage Check Violations 567
Dynamic DC Leakage Path Check Violations 569

© 2003-2020 All Rights Reserved.

Dynamic Delay Check 572
Dynamic Diode Voltage Check 575
Dynamic Excessive Element Current Check Violations 577
Dynamic Excessive Rise, Fall, Undefined State Time Check Violations 579
Dynamic Floating Node Induced DC Leakage Path Check Violations 582
Dynamic Floating Node Statistical Check 591
Dynamic Glitch Check Violations 597
Dynamic HighZ Node Check Violations 600
Dynamic MOSFET Voltage Check Violations 605
Dynamic Node Capacitance Check 607
Dynamic Noisy Node Check Violations 609
Dynamic Pulse Width Check 612
Dynamic Resistor Voltage Check Violations 615
Dynamic Setup and Hold Check Violations 617
Dynamic Statistical HighZ Node Check 620
Dynamic Subckt Instance Activity Check 563
Dynamic Subckt Port Power Check Violations 625
Dynamic Subckt Port voltage/current Check 623
encryption 479
Envelope Following Analysis 78
Expressions 482
Global Nodes 490
Harmonic Balance Steady State Analysis 92
HB AC Analysis 113
HB Noise Analysis 121
HB S-Parameter Analysis 132
HB Stability Analysis 140
HB XF Analysis 144
IBIS Component Use Model 491
Immediate Set Options 188
Include File 501
Initial Conditions 498
Library - Sectional Include 506
Load Pull Analysis 163
Monte Carlo Analysis 166
Multi-Technology Simulation Mode 509
Netlist Parameters 514
Node Sets 510
Noise Analysis 182
Output Selections 525
Parameter Set - Block of Data 517
Parameter Soft Limits 511
Periodic AC Analysis 251
Periodic Noise Analysis 259
Periodic S-Parameter Analysis 270
Periodic STB Analysis 304
Periodic Steady-State Analysis 278
Periodic Transfer Function Analysis 309
PZ Analysis 318
Quasi-Periodic AC Analysis 324
Quasi-Periodic Noise Analysis 329
Quasi-Periodic S-Parameter Analysis 337
Quasi-Periodic Steady State Analysis 345
Quasi-Periodic Transfer Function Analysis 362
Reliability Analysis 368
Savestate - Recover 528
Sensitivity Analyses 532
Setting for Simulink-MATLAB co-simulation 65
Shell Command 393
S-Parameter Analysis 394
Special current saving options 444
Spectre Netlist Keywords 503
SpectreRF Summary 534
Stability Analysis 400
Static Always Conducting MOSFET Check Violations 655, 662
Static Capacitor Check Violations 628
Static Capacitor Voltage Check Violations 630
Static Coupling Impact Check 632
Static DC Leakage Path Check Violations 635
Static Diode Voltage Check 637
Static ERC Check Violations 639
Static Forward Bias Bulk Check Violations 652, 659
Static Highfanout Check 642
Static HighZ Node Check Violations 645
Static MOSFET Voltage Check Violations 648

© 2003-2020 All Rights Reserved.

Static PMOS to gnd count 657
Static RCDelay Check 665
Static Resistor Check Violations 668
Static Resistor Voltage Check Violations 670
Static Subckt Port Voltage Check 672
Static Transmission Gate Check Violations 674
Static Voltage Domain Conflict Check 676
Static Voltage Domain Device Check Violations 678
Stitch Flow Use Model 535
Subcircuit Definitions 541
Sweep Analysis 413
The fastdc command line option 486
The postlayout command line option 518
The Structural if-statement 499
THERMAL Analysis 420
Time-Domain Reflectometer Analysis 418
Tips for Reducing Memory Usage 508
Tips for Reducing Memory Usage with SpectreRF 520
Transfer Function Analysis 446
User Defined Functions 489
Using analogmodel for Model Passing 459
Vec/Vcd/Evcd Digital Stimulus 546
Verilog-A Usage and Language Summary 549
Static Always Conducting MOSFET Check Violations checkers 655, 662
Static Capacitor Check Violations checkers 628
Static Capacitor Voltage Check Violations checkers 630
Static Coupling Impact Check checkers 632
Static DC Leakage Path Check Violations checkers 635
Static Diode Voltage Check checkers 637
Static ERC Check Violations checkers 639
Static Forward Bias Bulk Check Violations checkers 652, 659
Static Highfanout Check checkers 642
Static HighZ Node Check Violations checkers 645
Static MOSFET Voltage Check Violations checkers 648
Static PMOS to gnd count checkers 657
Static RCDelay Check checkers 665
Static Resistor Check Violations checkers 668
Static Resistor Voltage Check Violations checkers 670
Static Subckt Port Voltage Check checkers 672
Static Transmission Gate Check Violations checkers 674
Static Voltage Domain Conflict Check checkers 676
Static Voltage Domain Device Check Violations checkers 678
static_capacitor
checker
definition 628
description 628
parameters 628
static_capacitor(Static Capacitor Check Violations) 628
static_capv
checker
definition 630
description 630
parameters 630
static_capv(Static Capacitor Voltage Check Violations) 630
static_coupling
checker
definition 632
description 632
parameters 633
static_coupling(Static Coupling Impact Check) 632
static_dcpath
checker
definition 635
description 635
parameters 635
static_dcpath(Static DC Leakage Path Check Violations) 635
static_diodev
checker
definition 637
description 637
parameters 637
static_diodev(Static Diode Voltage Check) 637
static_erc
checker

© 2003-2020 All Rights Reserved.

definition 639
description 639
parameters 639
static_erc(Static ERC Check Violations) 639
static_highfanout
checker
definition 642
description 642
parameters 643
static_highfanout(Static Highfanout Check) 642
static_highz
checker
definition 645
description 645
parameters 645
static_highz(Static HighZ Node Check Violations) 645
static_mosv
checker
definition 648
description 648
parameters 648
static_mosv(Static MOSFET Voltage Check Violations) 648
static_nmos2vdd
checker
definition 651
description 651
parameters 651
static_nmosb
checker
definition 652
description 652
parameters 652
static_nmosb(Static Forward Bias Bulk Check Violations) 652
static_nmosvgs
checker
definition 655
description 655
parameters 655
static_nmosvgs(Static Always Conducting MOSFET Check Violations) 655
static_pmos2gnd
checker
definition 657
description 657
parameters 658
static_pmos2gnd(Static PMOS to gnd count) 657
static_pmosb
checker
definition 659
description 659
parameters 659
static_pmosb(Static Forward Bias Bulk Check Violations) 659
static_pmosvgs
checker
definition 662
description 662
parameters 662
static_pmosvgs(Static Always Conducting MOSFET Check Violations) 662
static_rcdelay
checker
definition 665
description 665
parameters 665
static_rcdelay(Static RCDelay Check) 665
static_resistor
checker
definition 668
description 668
parameters 668
static_resistor(Static Resistor Check Violations) 668
static_resv
checker
definition 670
description 670
parameters 670
static_resv(Static Resistor Voltage Check Violations) 670
static_subcktport
checker
definition 672
description 672
parameters 673
static_subcktport(Static Subckt Port Voltage Check) 672
static_tgate
checker
definition 674
description 674
parameters 674
static_tgate(Static Transmission Gate Check Violations) 674
static_vconflict
checker

© 2003-2020 All Rights Reserved.

definition 676
description 676
parameters 677
static_vconflict(Static Voltage Domain Conflict Check) 676
static_voltdomain
checker
definition 678
description 678
parameters 678
static_voltdomain(Static Voltage Domain Device Check Violations) 678
stb
analysis
definition 400, 408
description 400
parameters 400, 408
stb(Stability Analysis) 400
stitch
other
description 535
Stitch Flow Use Model other 535
stitch(Stitch Flow Use Model) 535
Subcircuit Definitions other 541
subckt
other
definition 543
description 541
subckt(Subcircuit Definitions) 541
sweep
analysis
definition 413
description 413
parameters 413
Sweep Analysis analyses 413
sweep(Sweep Analysis) 413
syntax conventions 12

T

tdr
analysis
definition 418
description 418
parameters 418
tdr(Time-Domain Reflectometer Analysis) 418
The fastdc command line option other 486
The postlayout command line option other 518
The Structural if-statement other 499
thermal
analysis
definition 420
parameters 420
THERMAL Analysis analyses 420
thermal(THERMAL Analysis) 420
Time-Domain Reflectometer Analysis analyses 418
Tips for Reducing Memory Usage other 508
Tips for Reducing Memory Usage with SpectreRF other 520
tran
analysis
definition 423
description 423
parameters 423
Transfer Function Analysis analyses 446

U

-U, spectre command option 32
User Defined Functions other 489
Using analogmodel for Model Passing other 459
uti
analysis
definition 444
description 444
parameters 445
uti(Special current saving options) 444
-uwifmt, spectre command option 29
-uwilib, spectre command option 29

V

-V, spectre command option 32
Vec/Vcd/Evcd Digital Stimulus other 546
vector
other
description 546
vector(Vec/Vcd/Evcd Digital Stimulus) 546
Verilog-A 11
veriloga
other
description 549
Verilog-A Usage and Language Summary other 549

© 2003-2020 All Rights Reserved.

veriloga(Verilog-A Usage and Language Summary) 549
version information 32

W

-W, spectre command option 32
warn (+/-), spectre command option 30

X

xf
analysis
definition 447
description 446
parameters 447
xf(Transfer Function Analysis) 446

© 2003-2020 All Rights Reserved.