7. Schematic Diagram

7-1. Circuit Descriptions

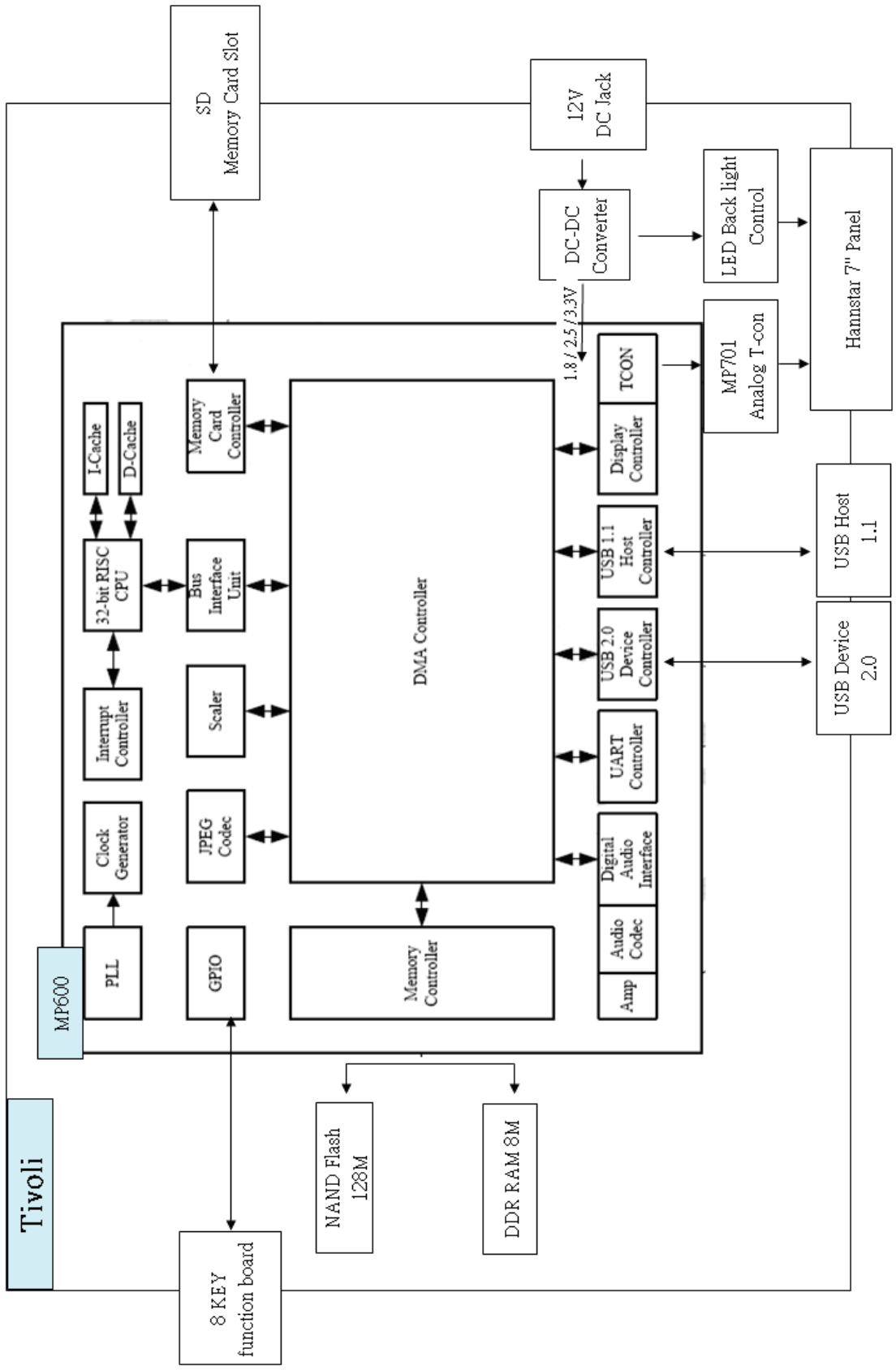

7-1-1. Circuit Description

Location	Function	Remark
NAND FLASH	- The memory which stores the firmware to operate the set.	K9F1G08U0
SDRAM	- The RAM necessary to operate the set.	M12L64164

7-2. Schematic Diagram

- This Document can not be used without Samsung's authorization.

7-2-1. CPU

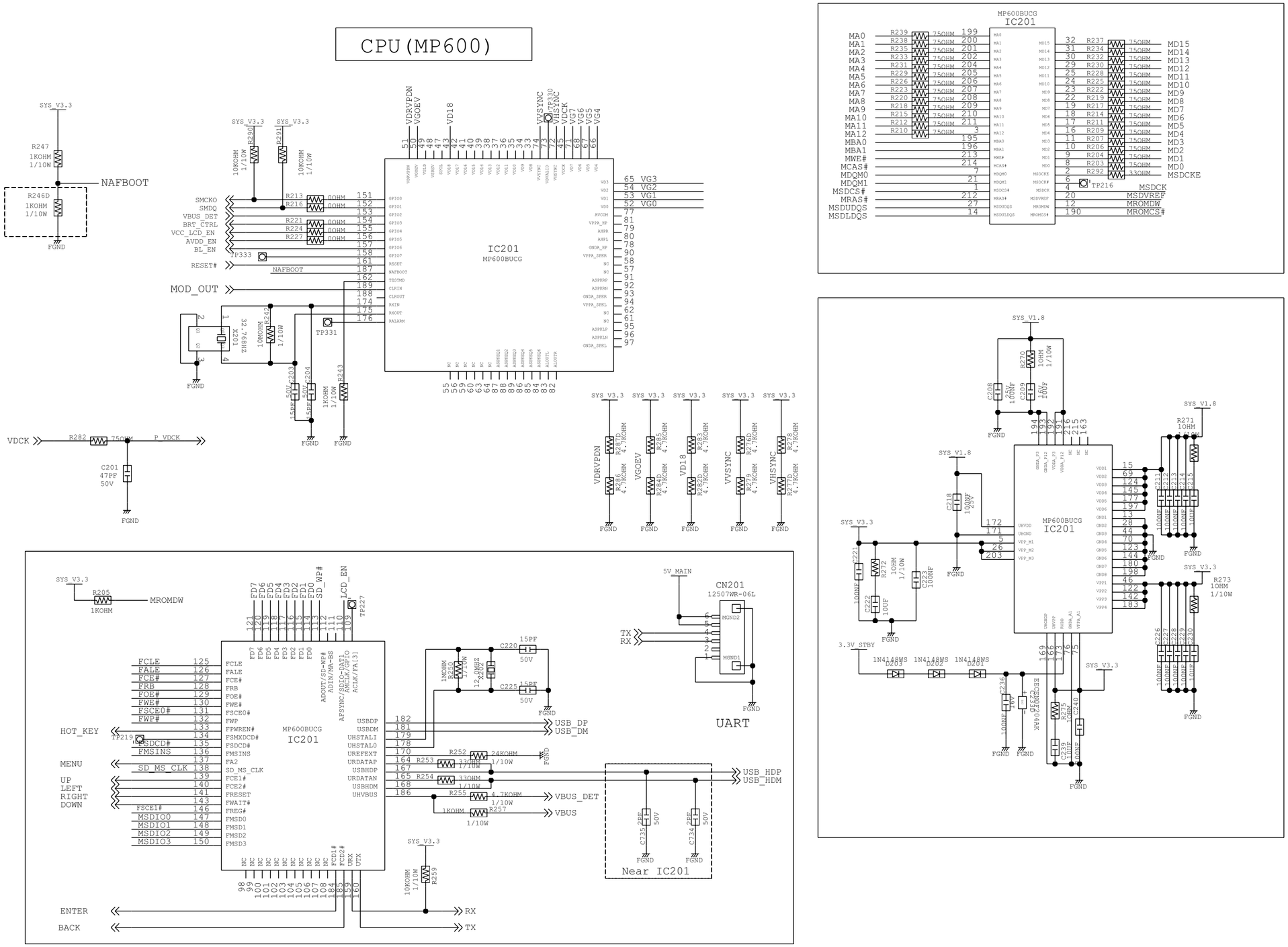

7-2-2. DDR, FLASH Memory

- This Document can not be used without Samsung's authorization.

DDR & FLASH MEMORY

SDRAM 8MBYTE

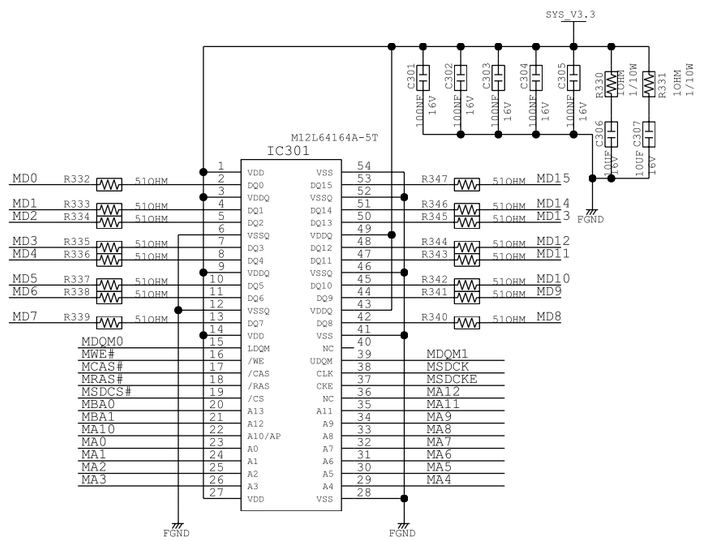

Flash Memory(Code)

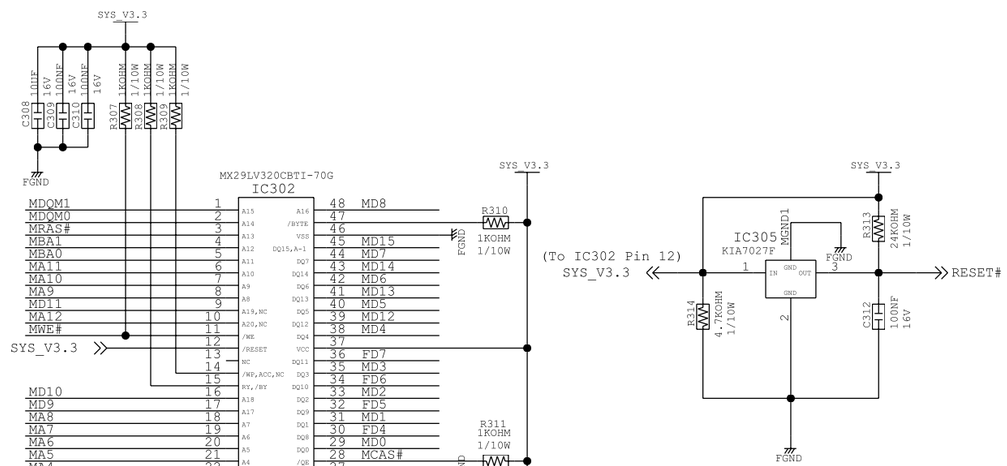

Flash Memory(USER)

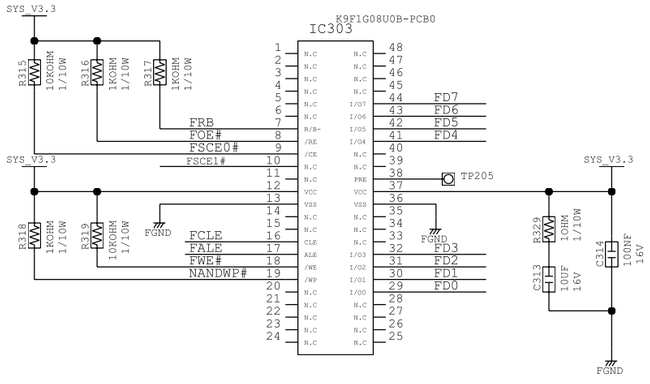

SYSTEM CLOCK
With SSC

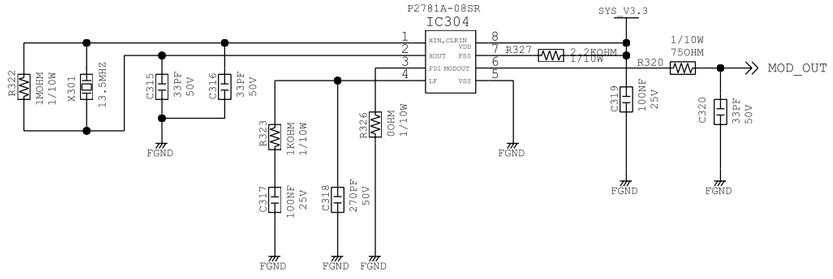

7-2-3. 2 IN 1 CARD SLOT,USB

- This Document can not be used without Samsung's authorization.

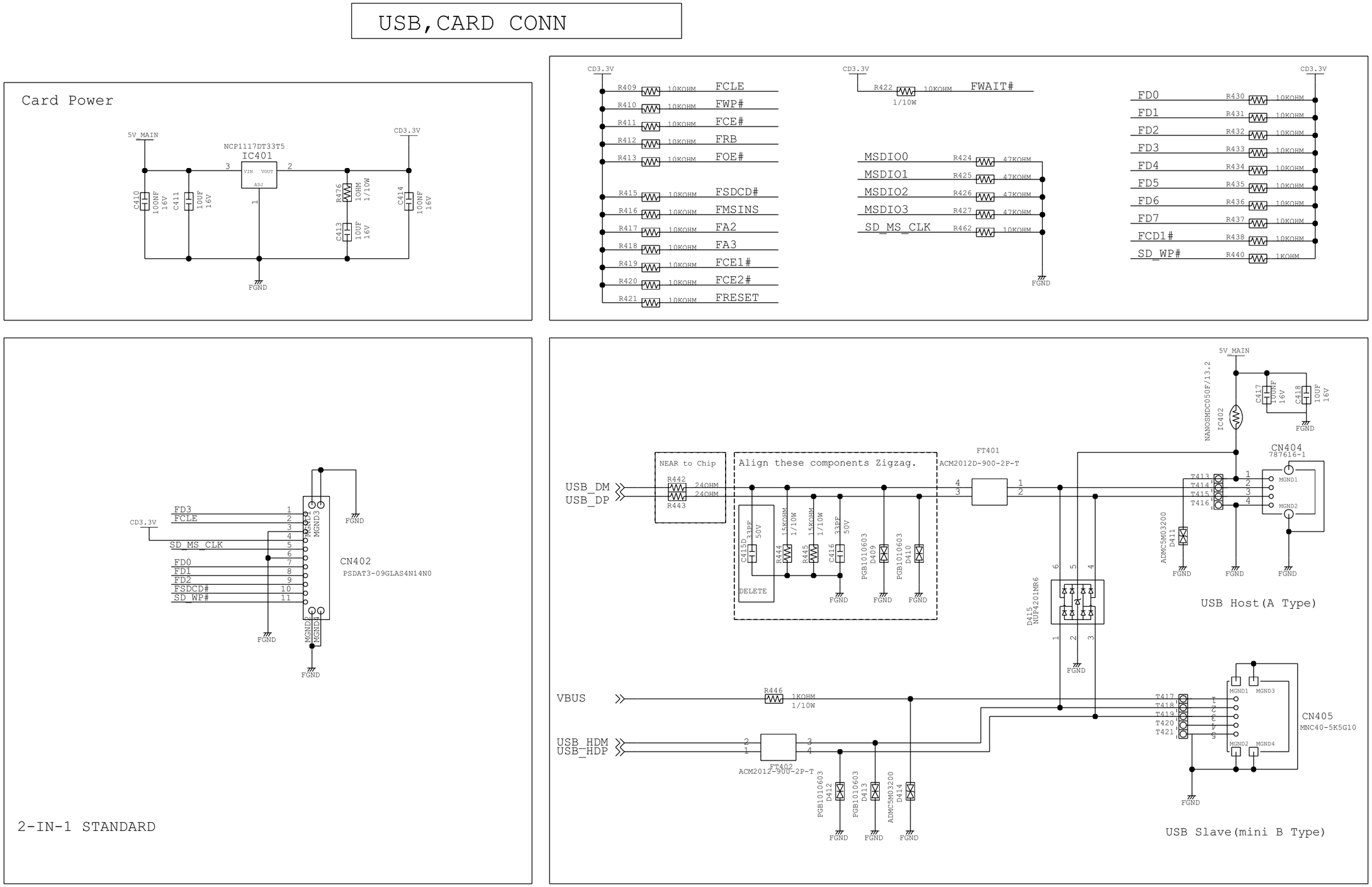

7-2-4. PANEL DRIVE

- This Document can not be used without Samsung's authorization.

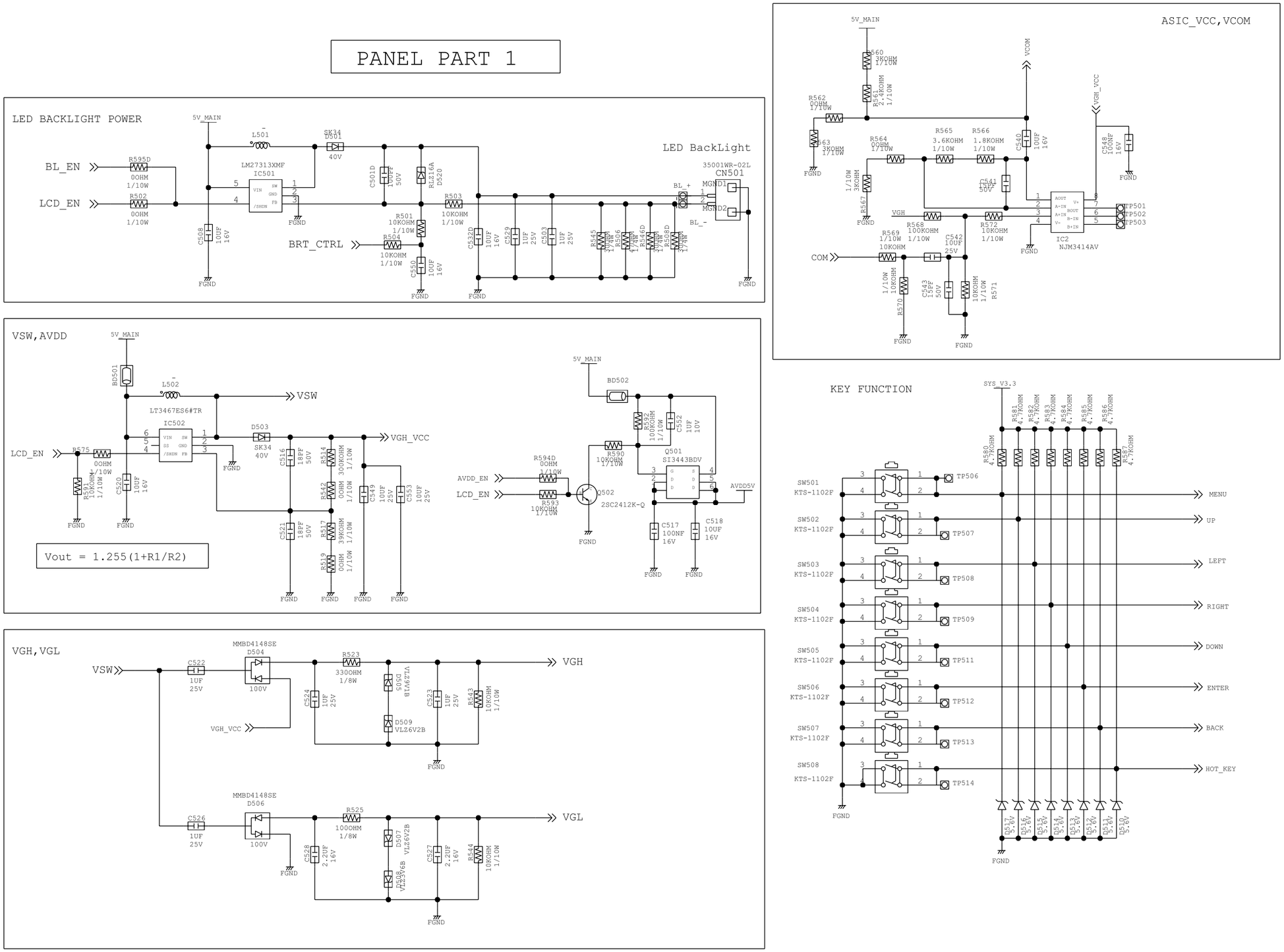

7-2-5. PANEL DRIVE IC

- This Document can not be used without Samsung's authorization.

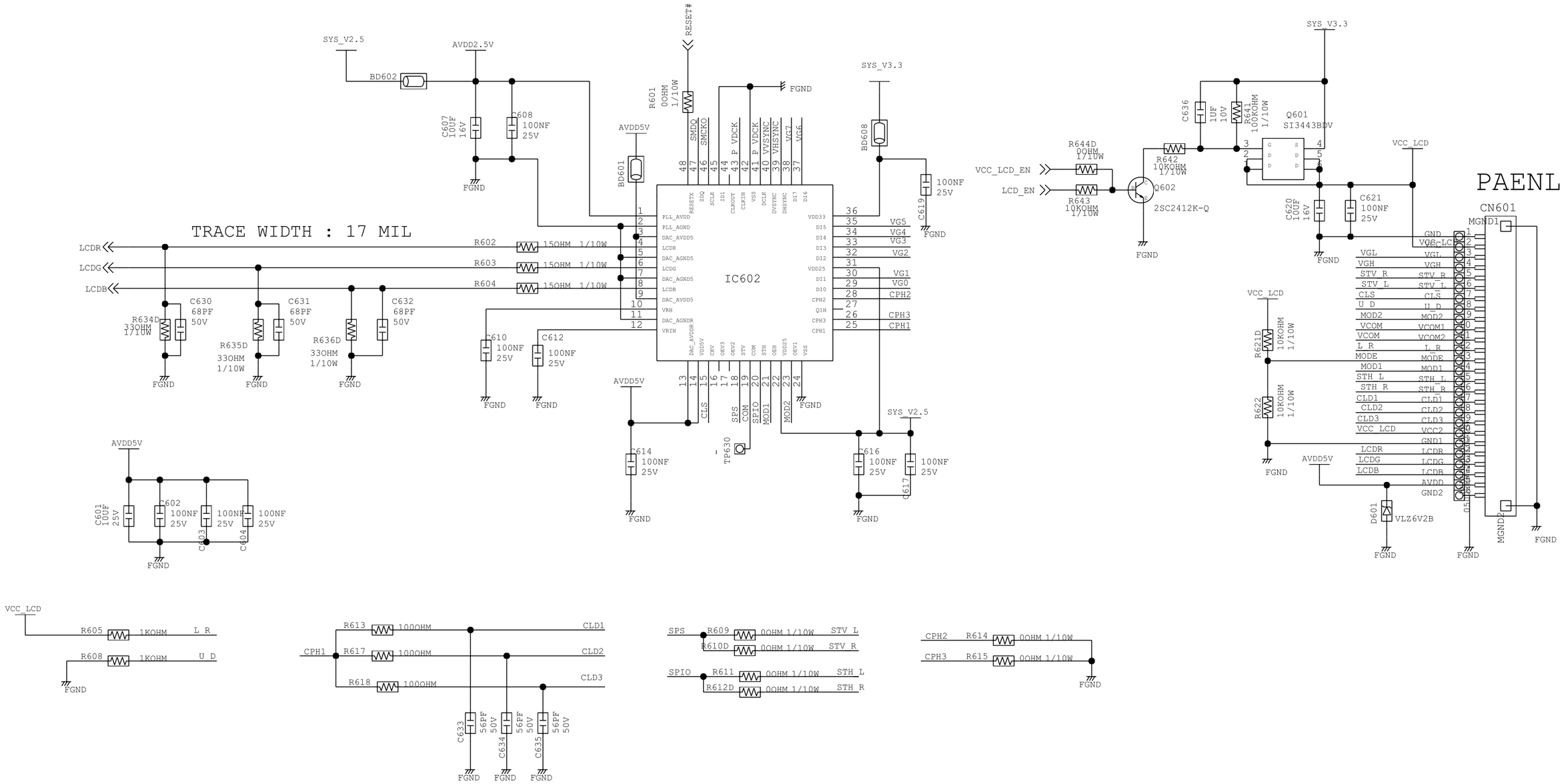

7-2-6. POWER
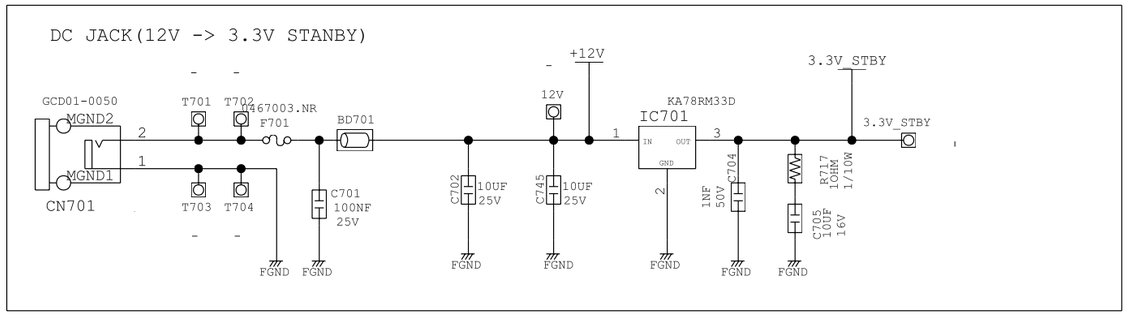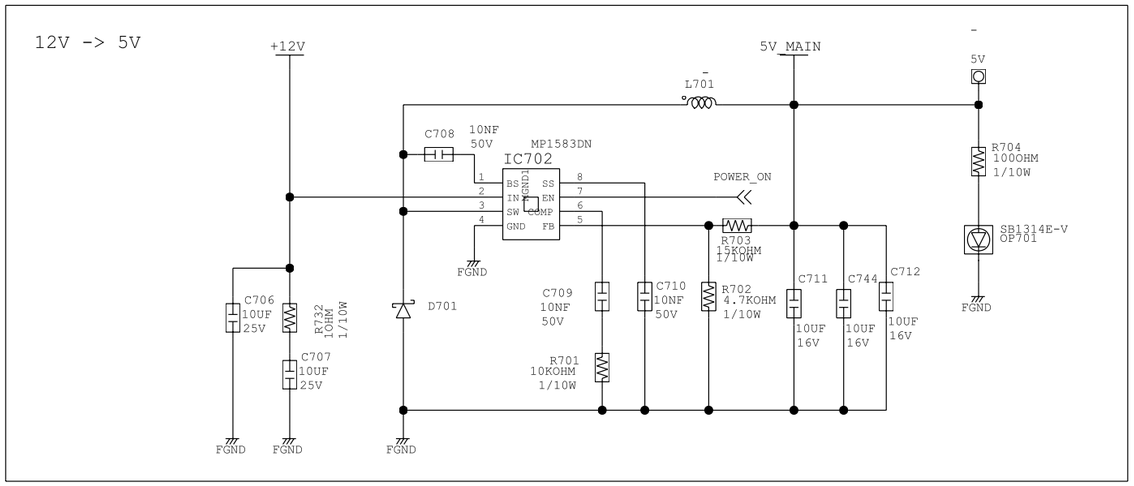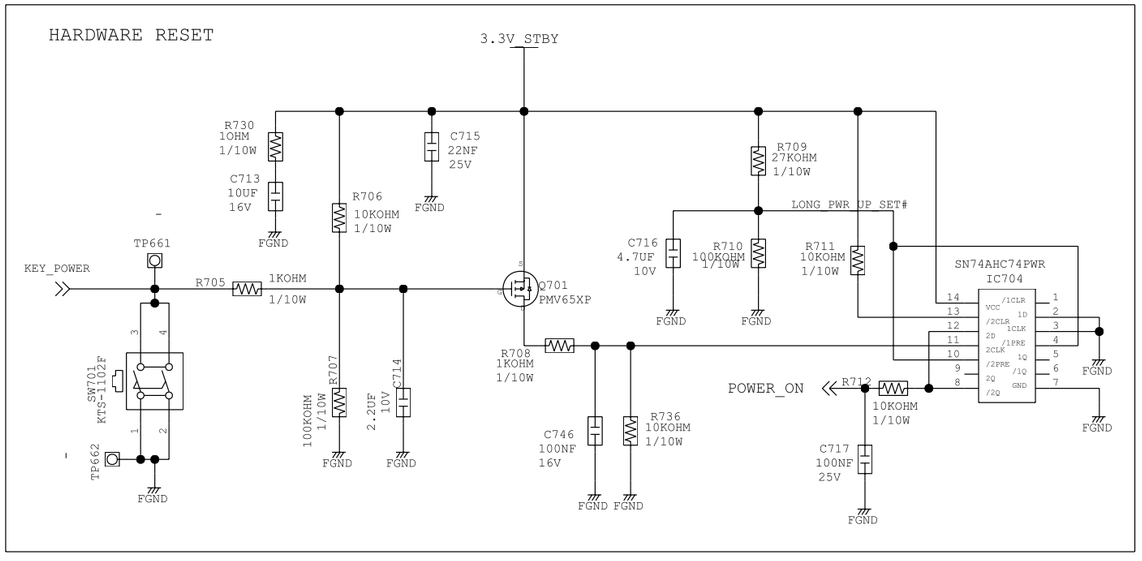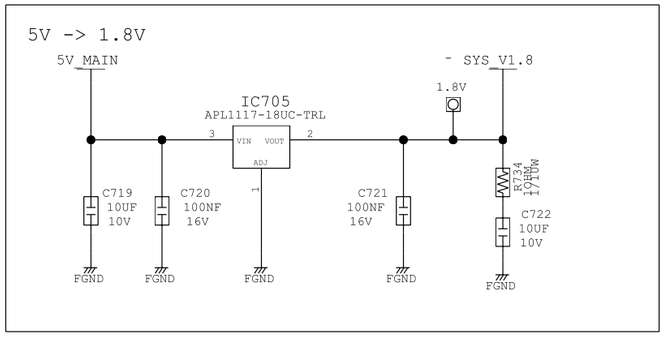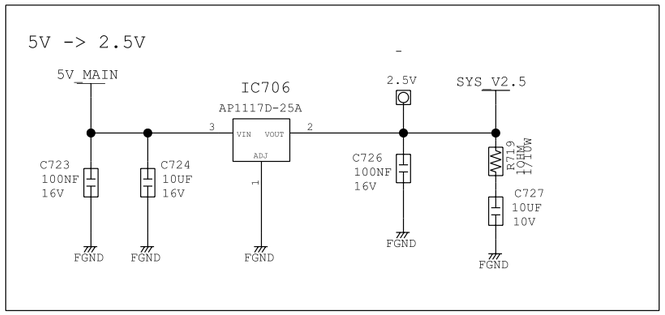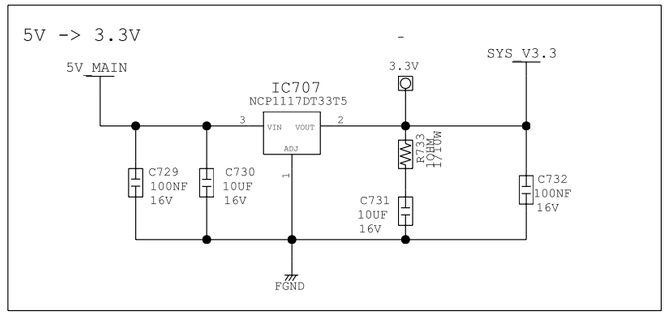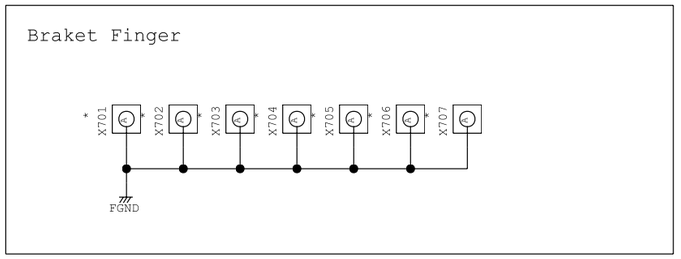
- This Document can not be used without Samsung's authorization.