ATTENTION ARCHE VISIBLE SUR TOUTE LA PROFONDEUR EN-DESSOUS

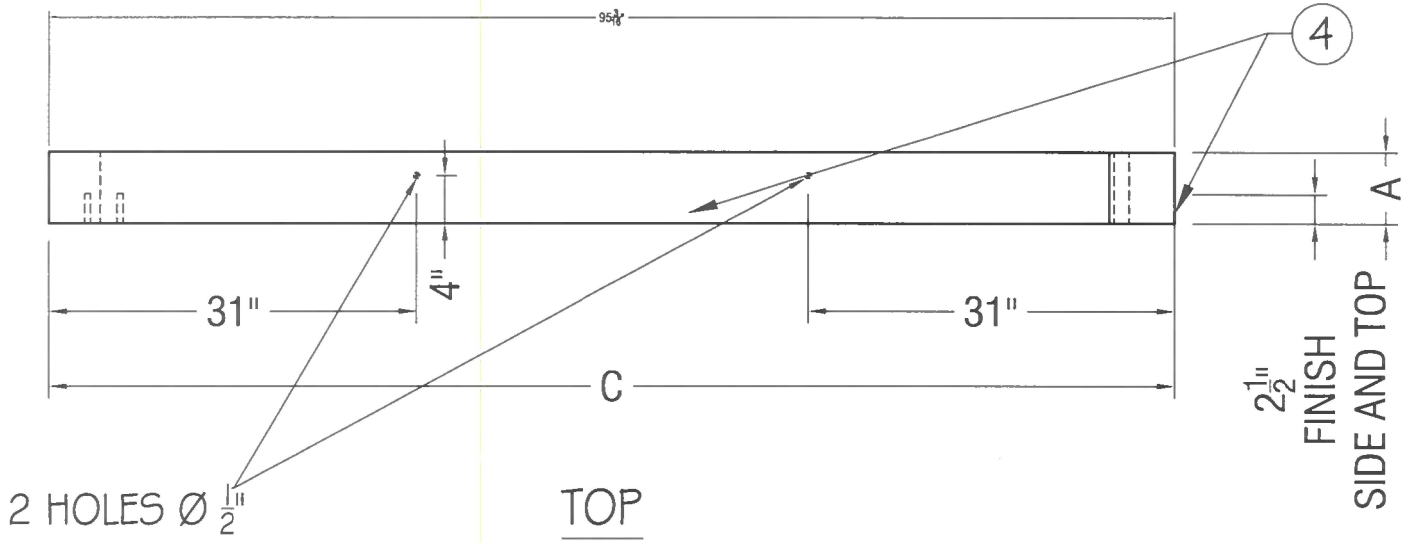

TOP

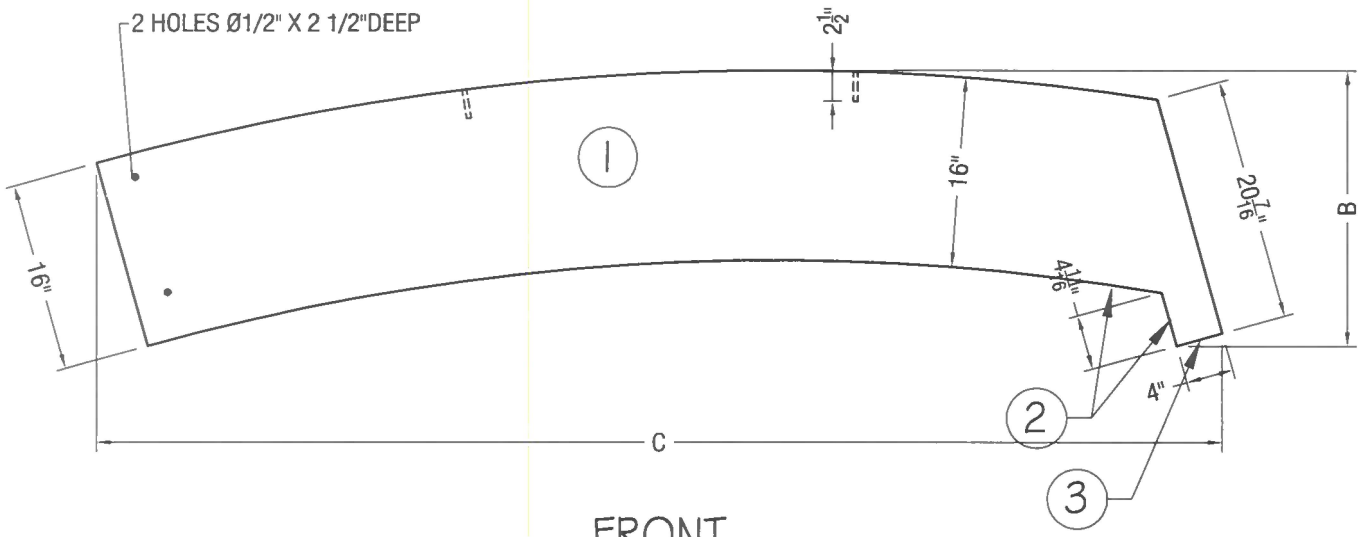

FRONT

#	QTÉ / QTY	A (PROF / DEPTH)	B (HAUT / THICK)	C (LONG / LENGTH)	SURFACES	REF
Y-A1B	5	6"	23 1/4"	95 3/16"	1@4	-

PROJET / PROJECT: S20-324 / NORTH CONWAY FIRE STATION

CLIENT / CUSTOMER: S.D. SZETELA

MATÉRIEL / MATERIAL: ~~WOODBURY~~ Cambridge

FINI / FINISH: THERMAL

DATE: 2020-10-05 PAR / BY: R.A.

REV: - PROG:

TECHNOPROFIL www.technoSIDE.ca