MATERIAL: **STANDSTEAD GRANITE**	FINISH: **THERMAL**

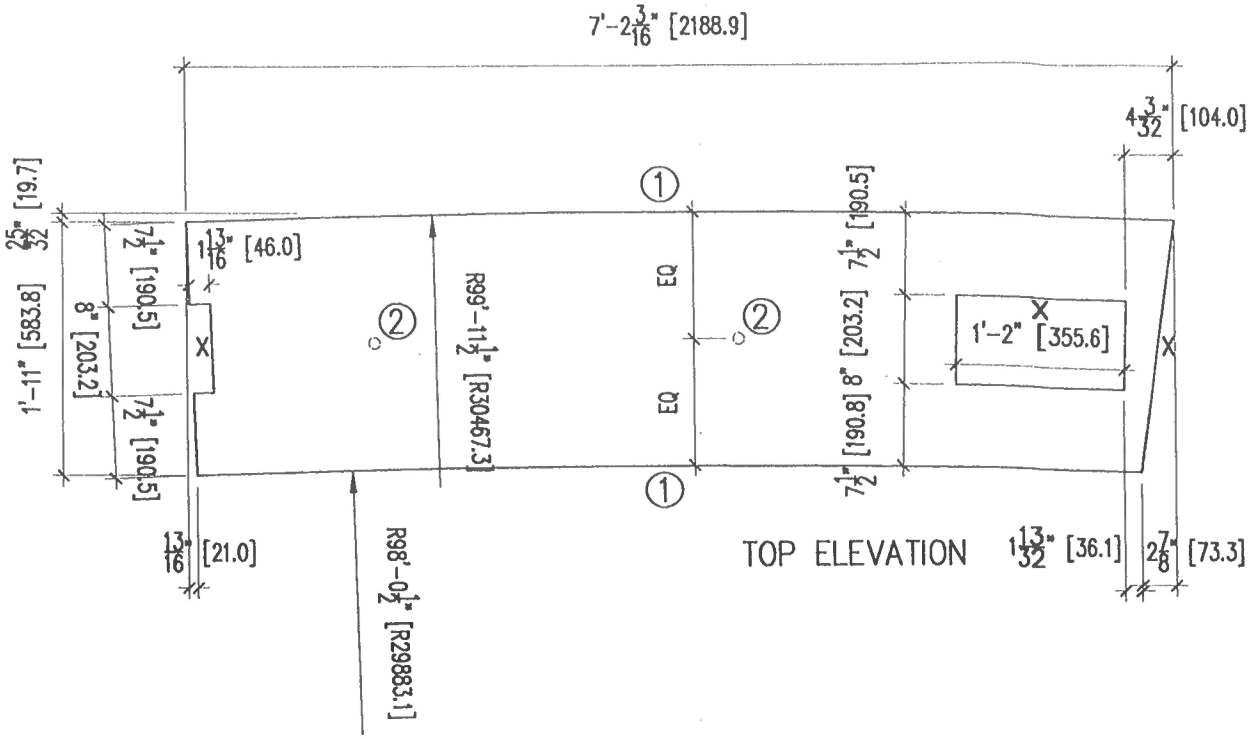

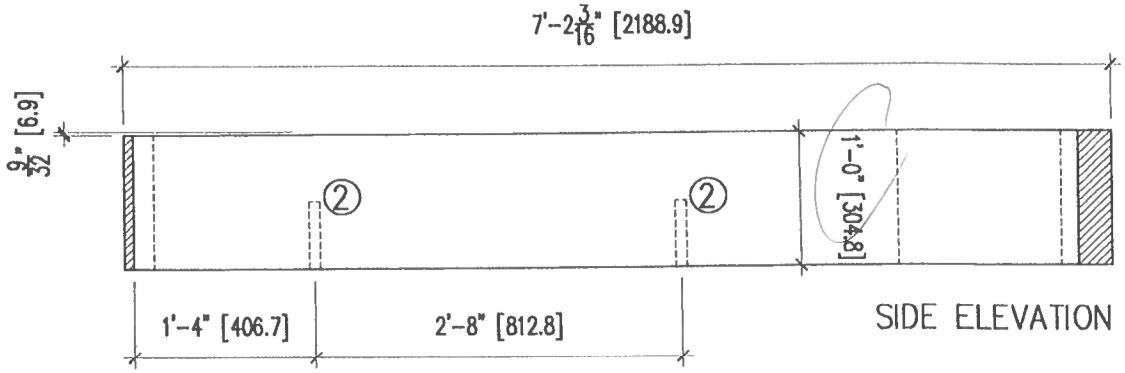

12.3

Thk: 12" (304.8mm)
Pcs: 1

R. BRATTI ASSOC., INC.
401 EAST GLEBE ROAD, ALEXANDRIA, VA 22305 703 549 6800

PROJECT : **ANCM GRANITE COPING**

DATE : **04.15.2016**	DWG NO :	NUM :	PAGE : **12.3**