南京米联电子科技有限公司

Num	Description
01	Summary
02	PRG
03	BANK_PL
04	BANK_PS
05	BANK_PWR
06	DDR3X2
07	DDR_PULL UP
08	SD0_TF
09	SD1_EMMC
10	QSPI_FLASH
11	USB UART
12	USB_OTG
13	PMU
14	ETH_1000M
15	Connector
16	PCB

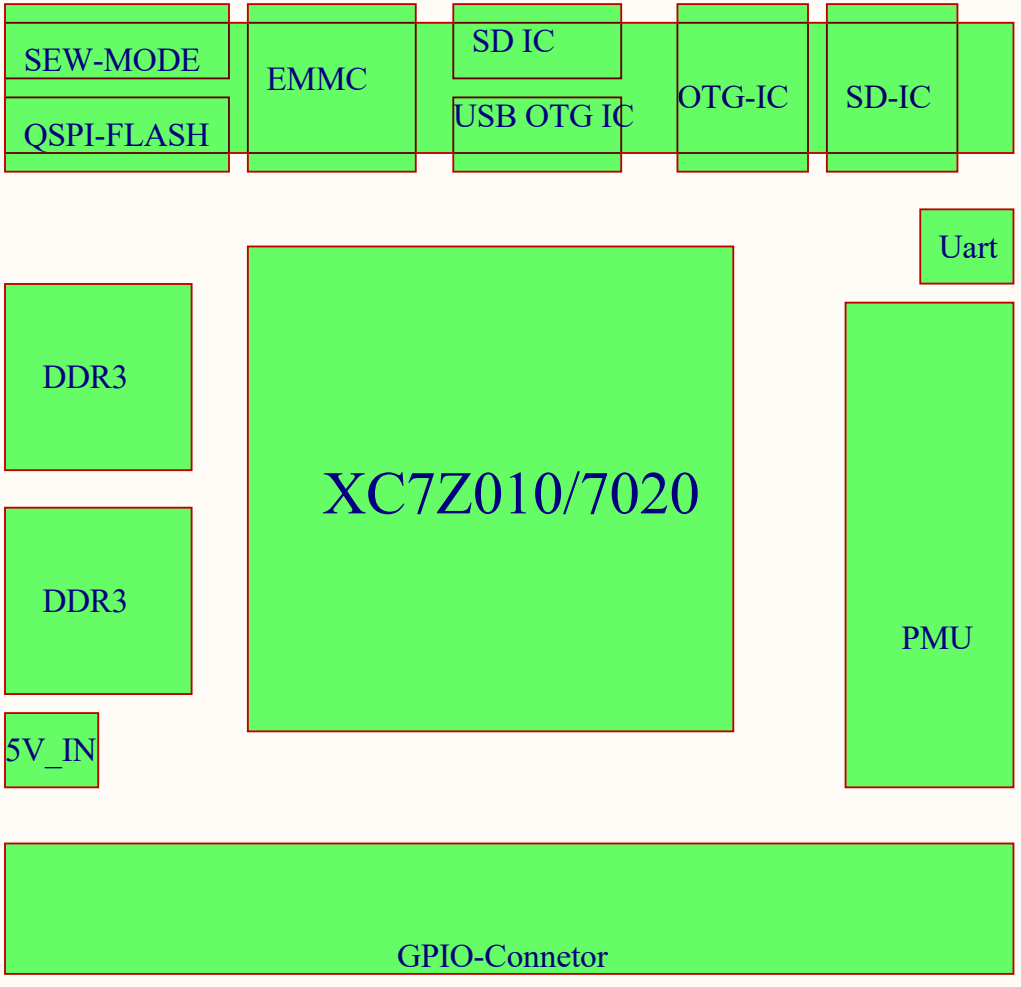

Title		
Size A4	Number	Revision
Date: 2017/3/7		Sheet of
File: E:\PCB_DS\..\01_TOP.SchDoc		Drawn By:

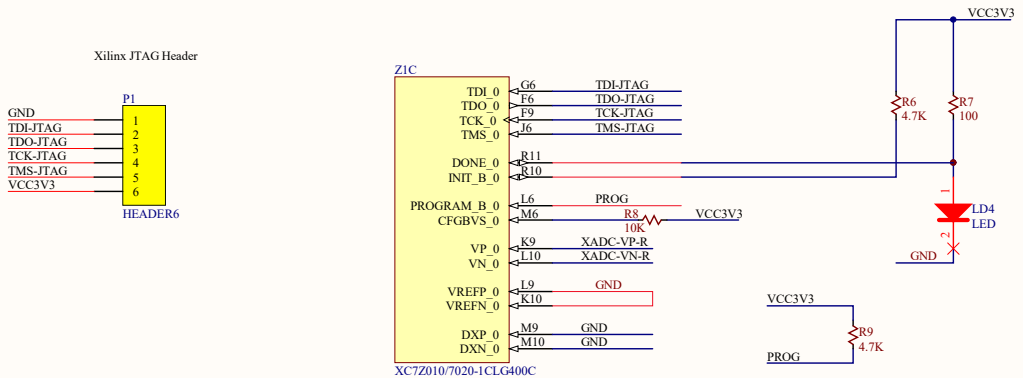

Title		
Size B	Number	Revision
Date: 2017/3/7		Sheet of
File: E:\PCB_DS\..\02_PRG.SchDoc		Drawn By:

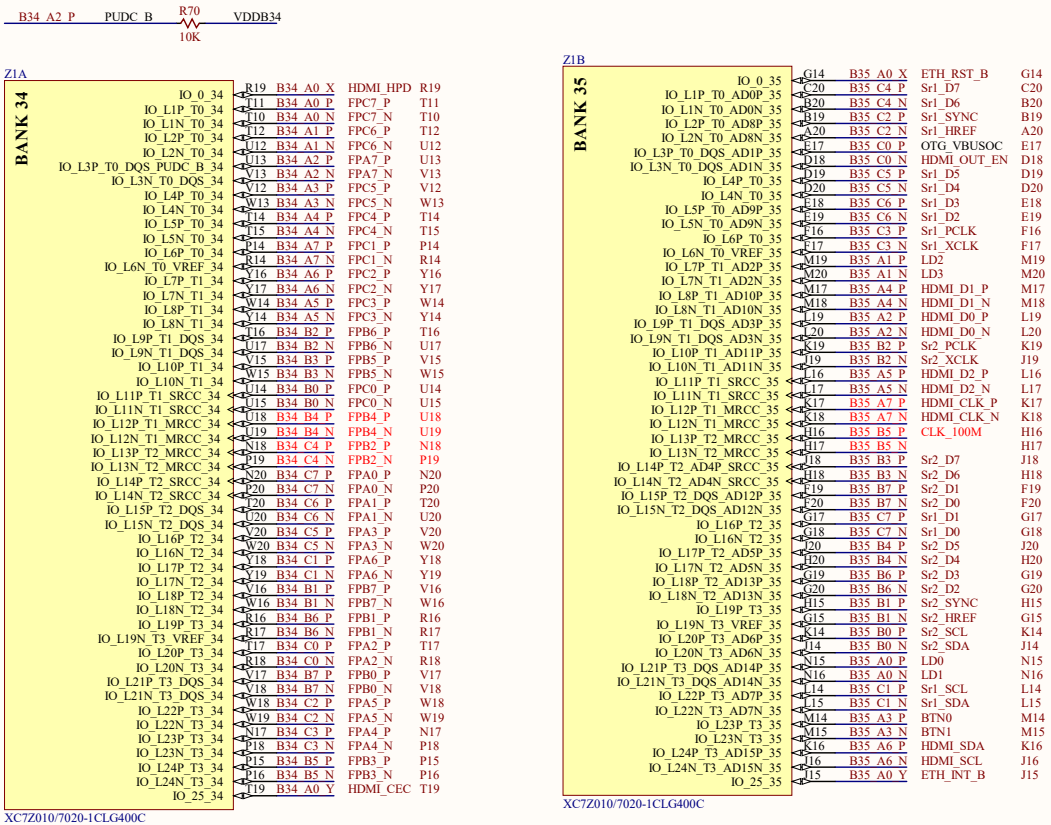

FPGA Banks

Title		
Size B	Number	Revision
Date: 2017/3/7		Sheet of
File: E:\PCB_DS\..\03_BANK_PL.SchDoc		Drawn By:

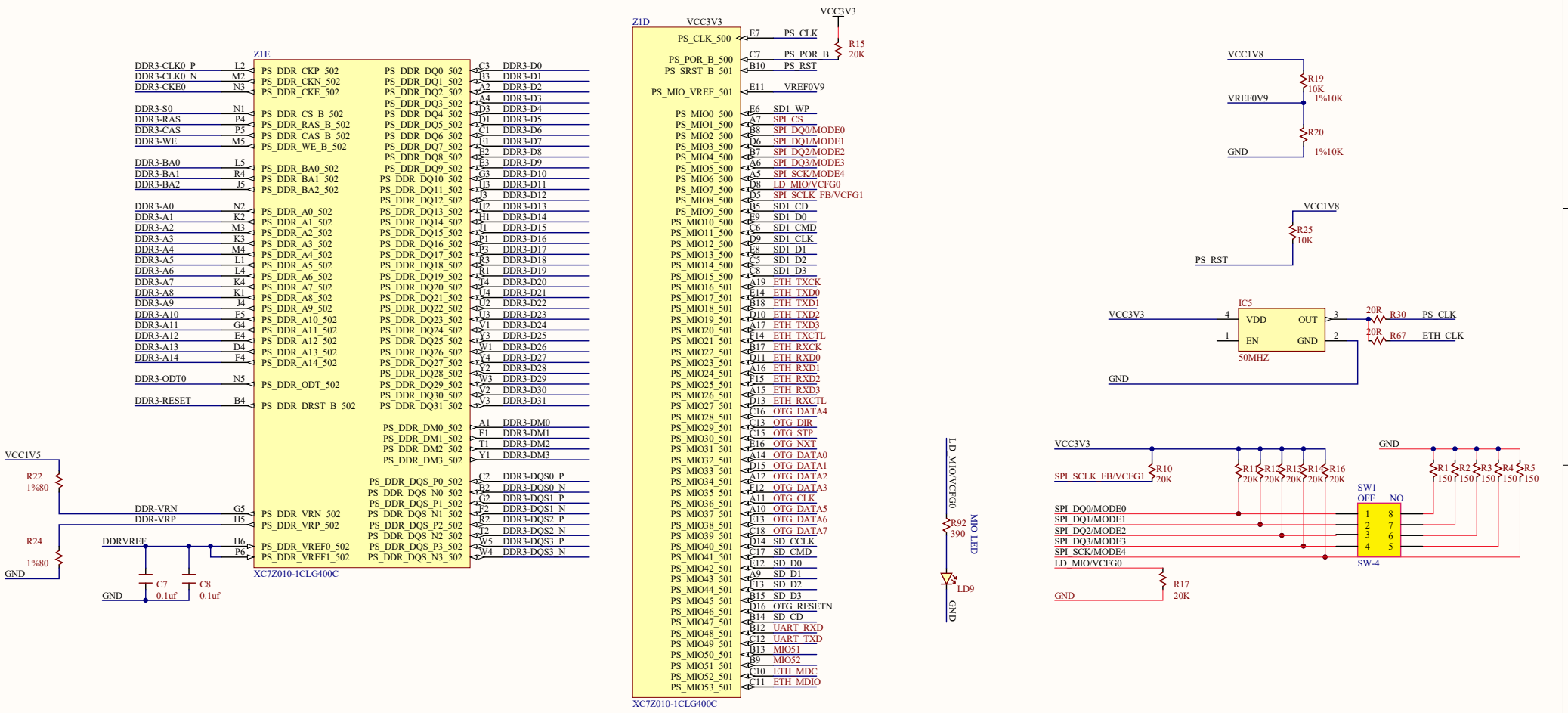

Title		
Size B	Number	Revision
Date: 2017/3/7		Sheet of
File: E:\PCB_DS\..\04_BANK_PS.SchDoc		Drawn By:

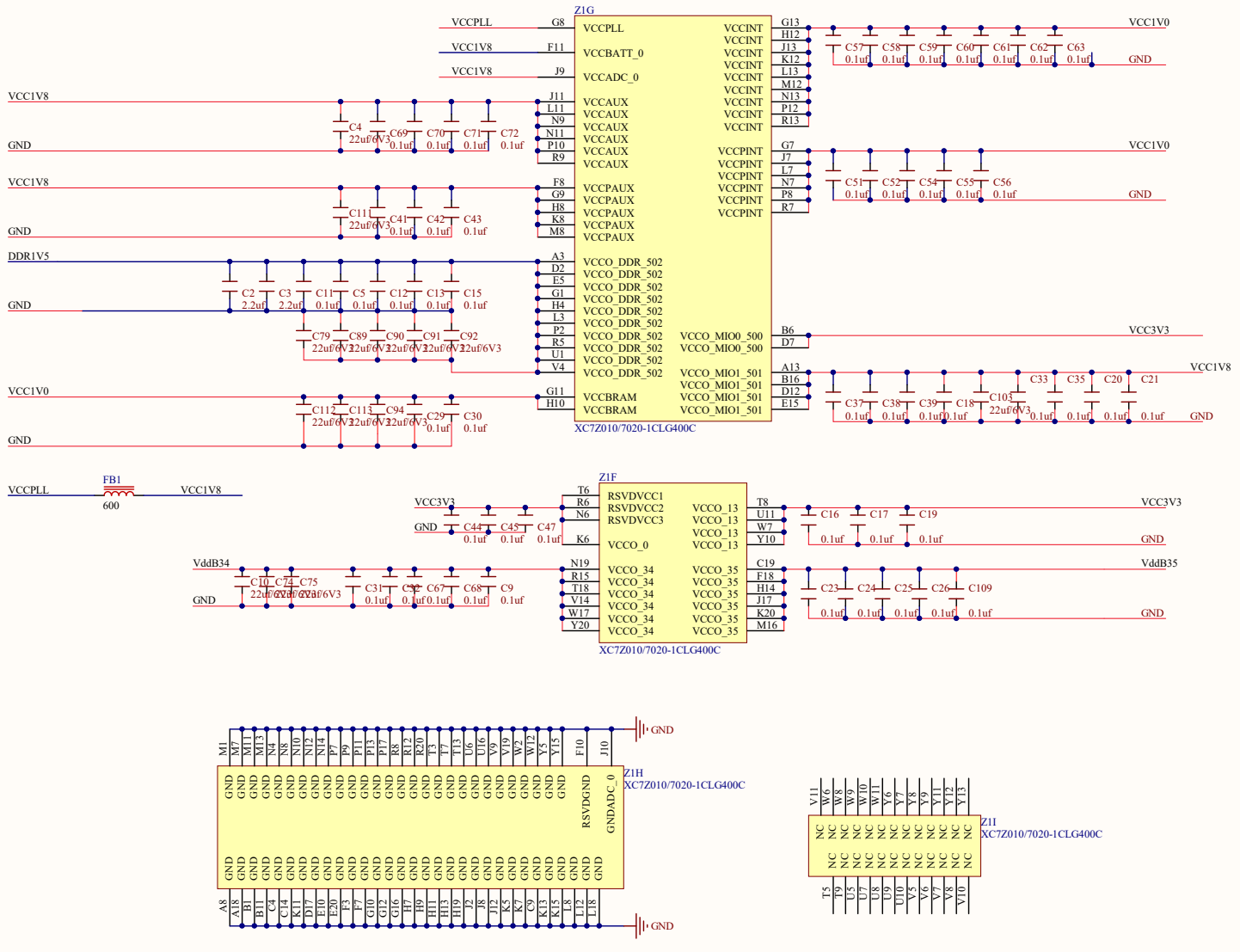

Title	POWER		
Size B	Number 5 1.1		Revision
Date: 2017/3/7		Sheet 8 of	
File: E:\PCB_DS\..\05_BANK_PWR.SchDoc		Drawn By:	

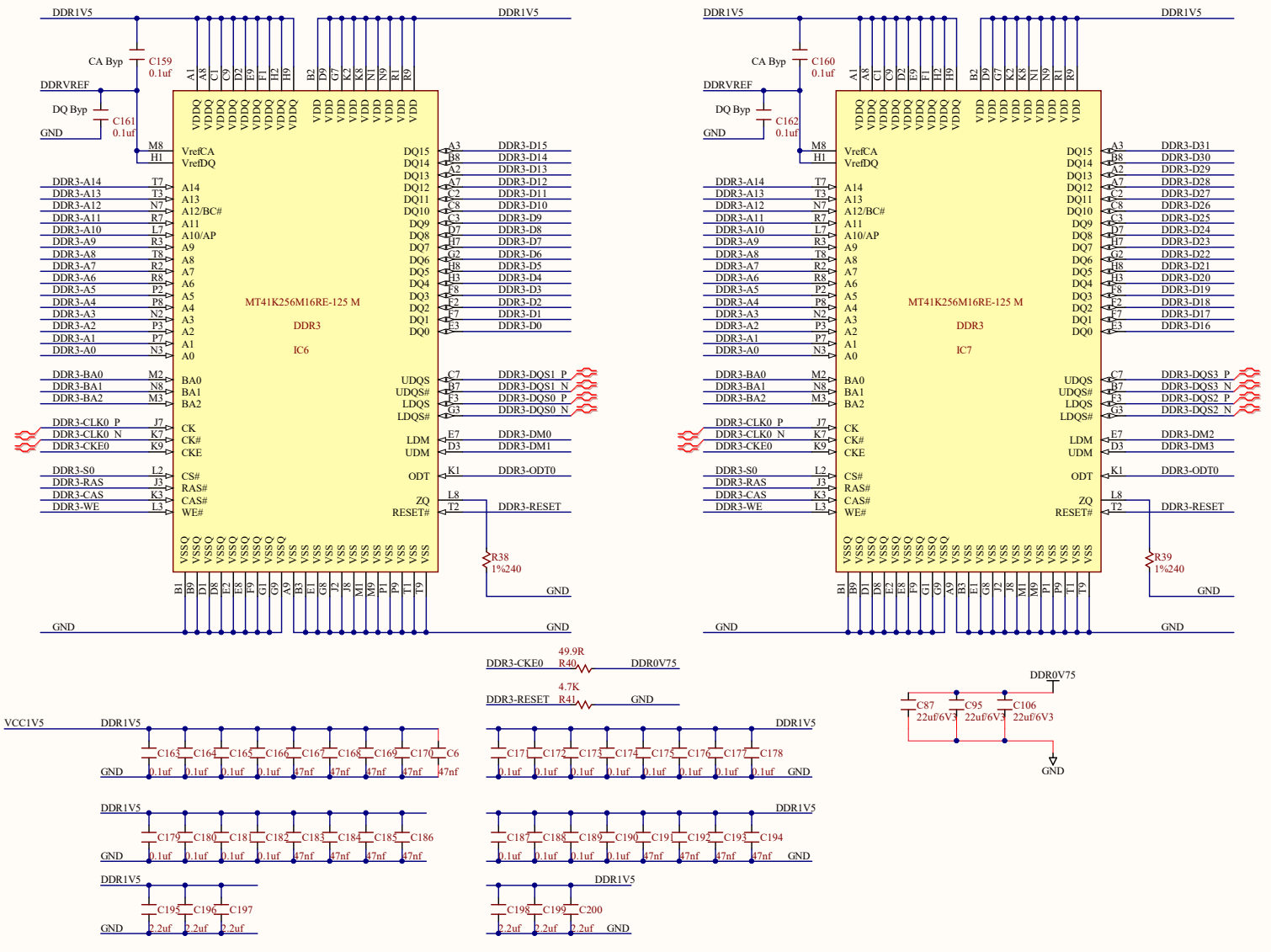

Title	DDR3X2	
Size B	Number 1.1	Revision
Date: 2017/3/7		Sheet of
File: E:\PCB_DS\...\06_DDR3X2.SchDoc		Drawn By:

6

8

DDR3 TERMINATION

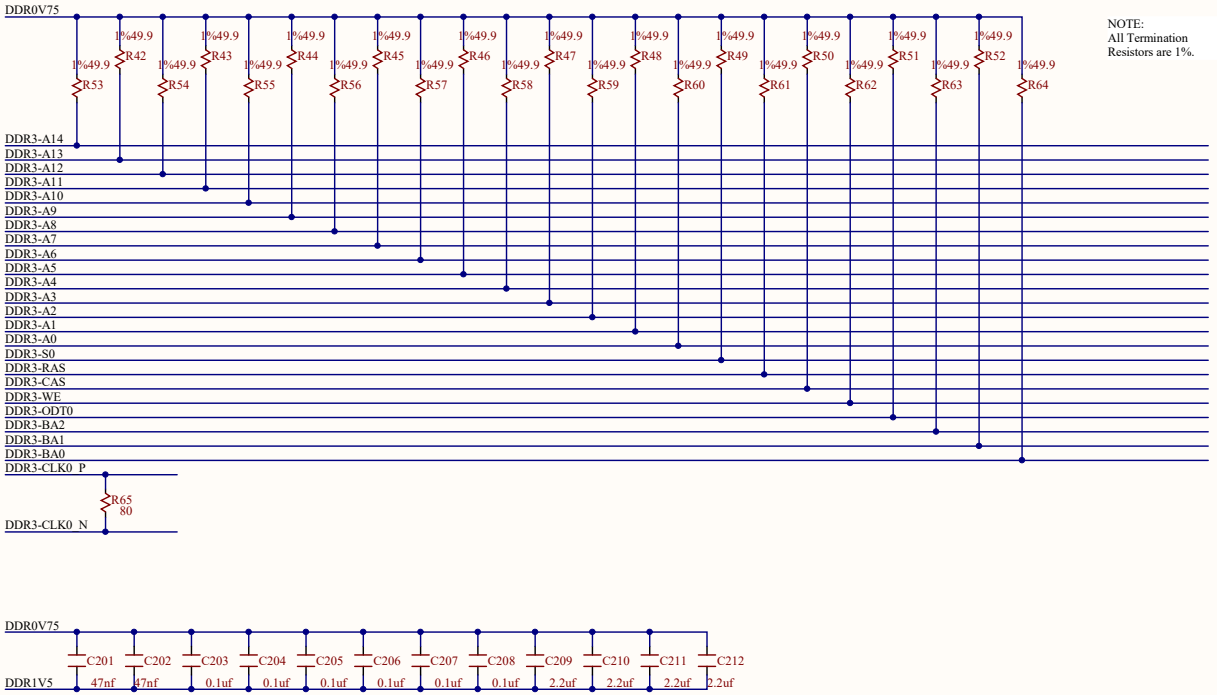

NOTE:
All Termination
Resistors are 1%.

Title		
Size B	Number	Revision
Date: 2017/3/7	Sheet of	
File: E:\PCB_DS\..\07_DDR_PULLUP.SchDoc	Drawn By:	

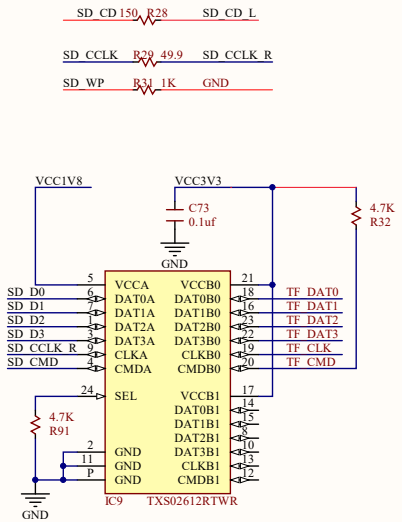

Title		
Size Orcad B	Number	Revision
Date: 2017/3/7		Sheet of
File: E:\PCB_DS\..\08_SD0_TF.SchDoc		Drawn By:

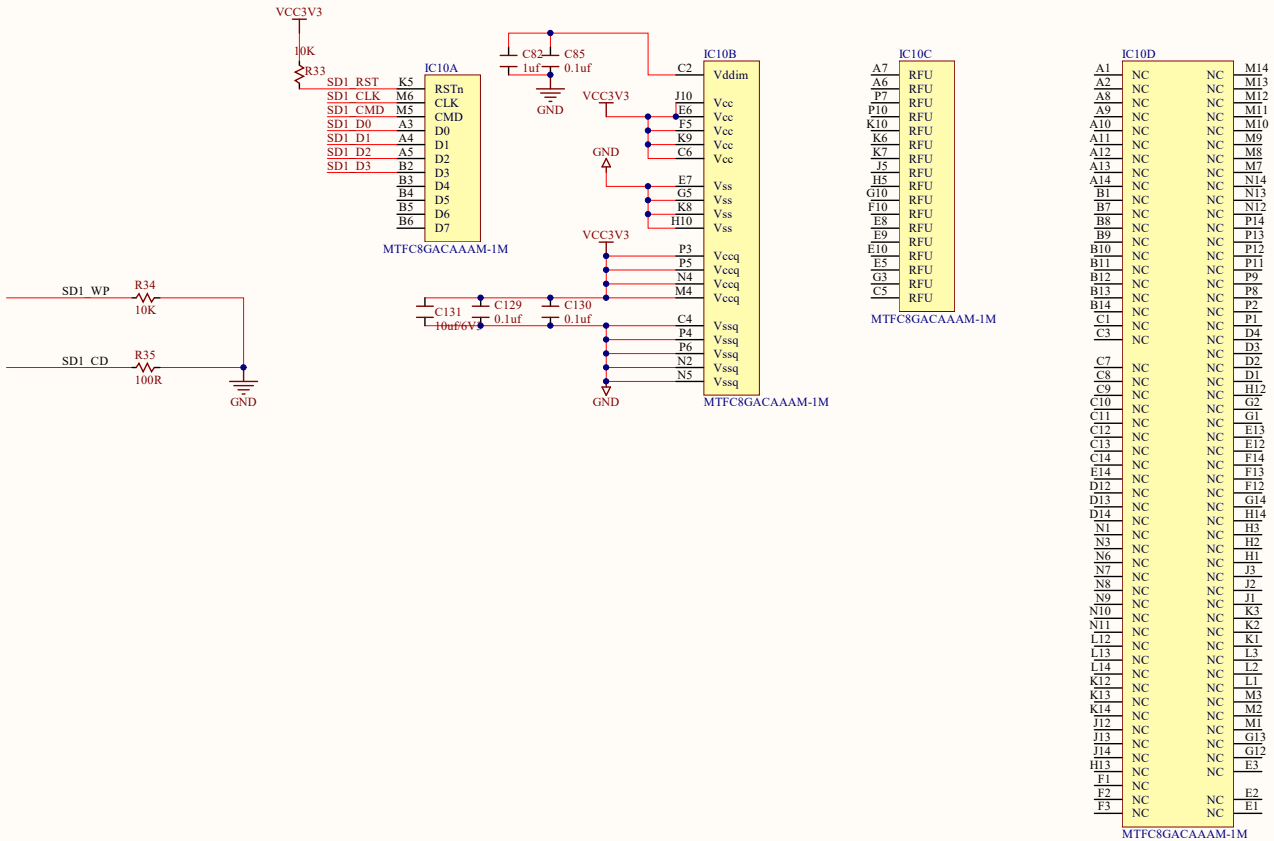

Title		
Size Orcad B	Number	Revision
Date: 2017/3/7		Sheet of
File: E:\PCB_DS\..\09_SD1_EMMC.SchDoc		Drawn By:

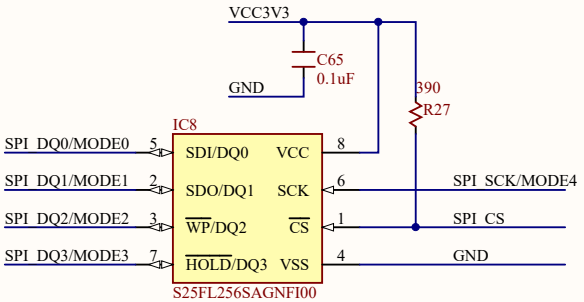

Title		
Size A4	Number	Revision
Date: 2017/3/7	Sheet of	
File: E:\PCB_DS\..\10_QSPI_FLASH.SchDoc	Drawn By:	

7

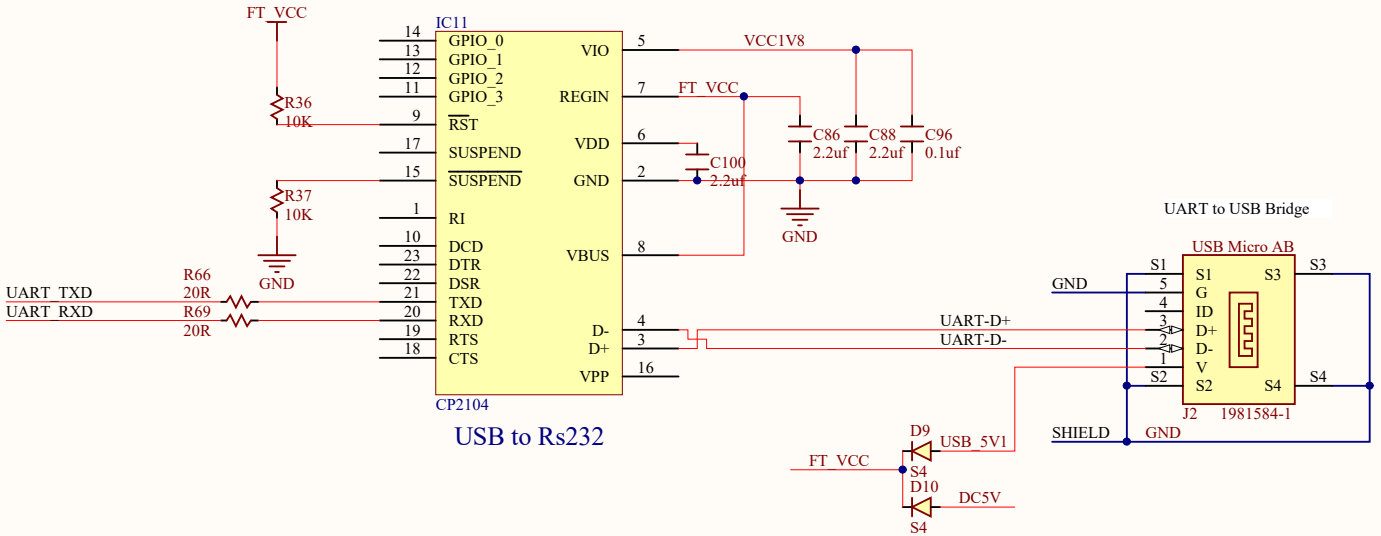

Title		
Size A4	Number	Revision
Date: 2017/3/7	Sheet of	
File: E:\PCB_DS\..\11_USB_UART.SchDoc	Drawn By:	

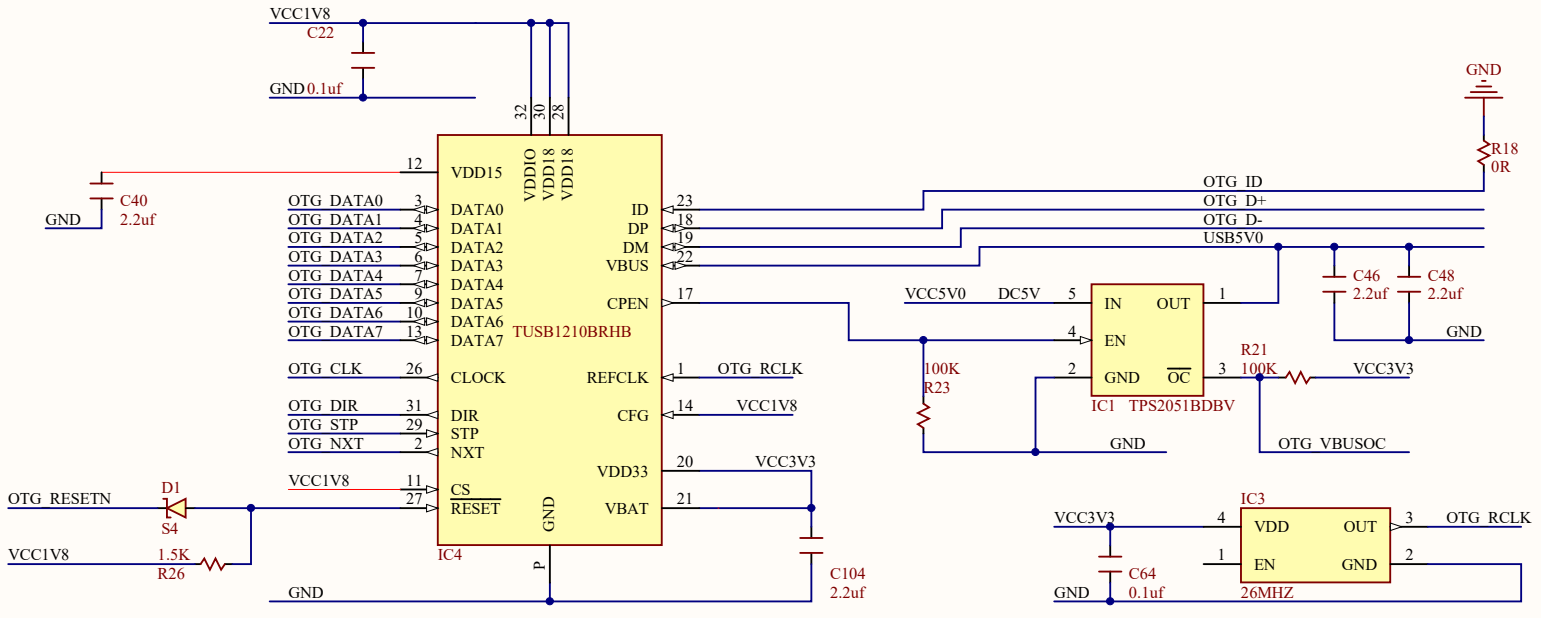

Title		
Size A4	Number	Revision
Date: 2017/3/7		Sheet of
File: E:\PCB_DS\..\12_USB_OTG.SchDoc		Drawn By:

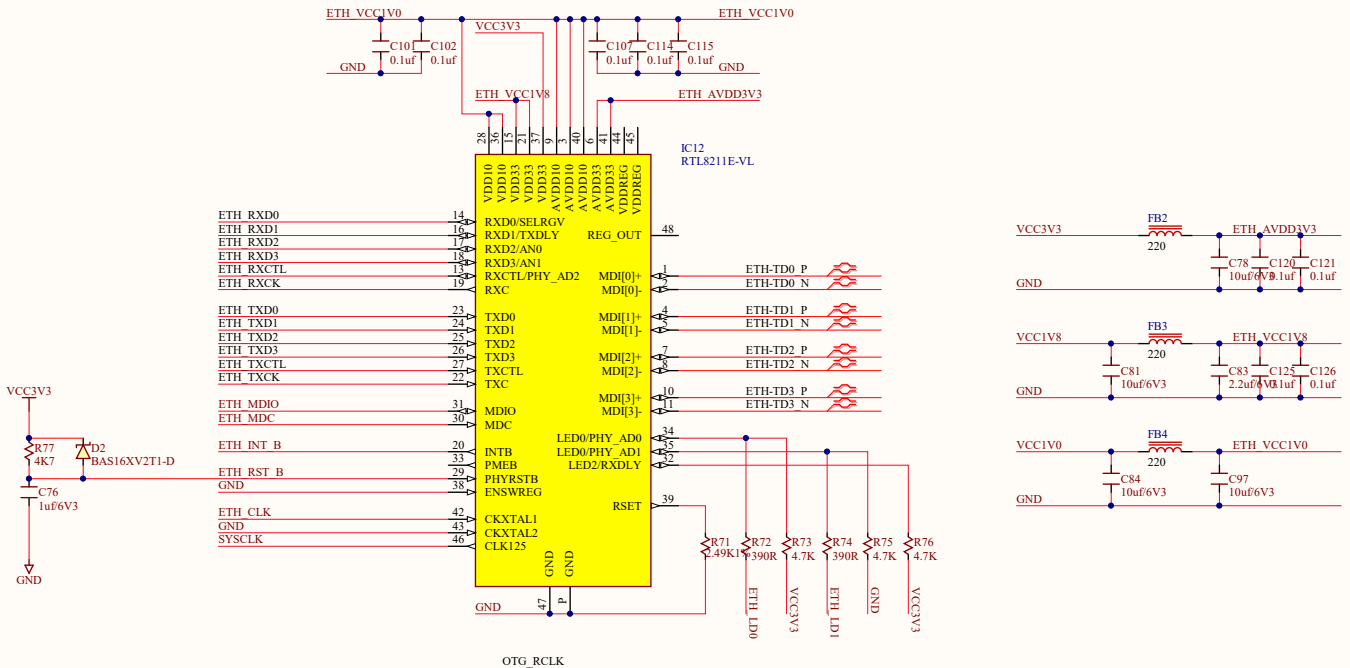

Title		
Size A3	Number	Revision
Date: 2017/3/7		Sheet of
File: E:\PCB_DS\..\13_ETH_1000M.SchDoc		Drawn By:

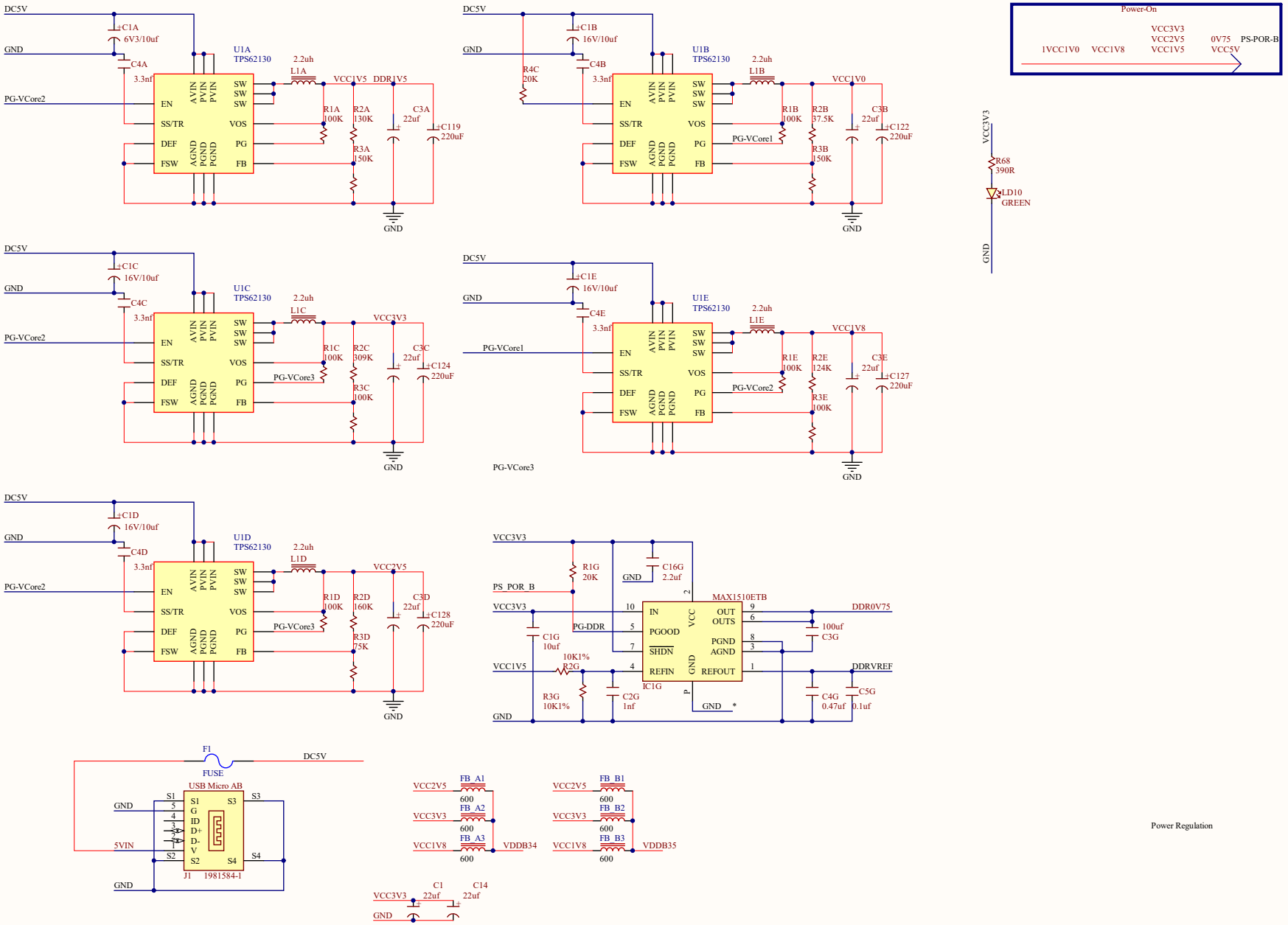

Power Regulation

Title		
Size A3	Number	Revision
Date: 2017/3/7		Sheet of
File: E:\PCB_DS\..\14_PMU.SchDoc		Drawn By:

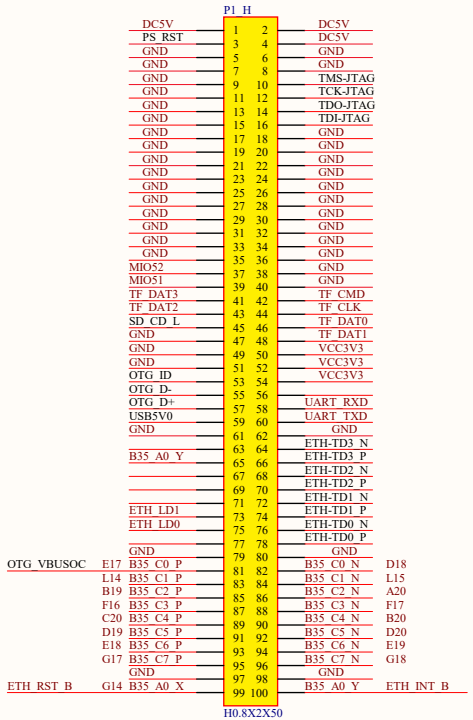

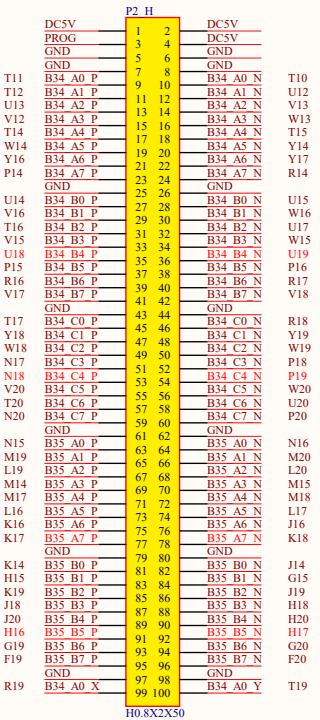

Title			
Size A3	Number		Revision
Date: 2017/3/7		Sheet of	
File: E:\PCB_DS\..\15_Connetor.SchDoc		Drawn By:	

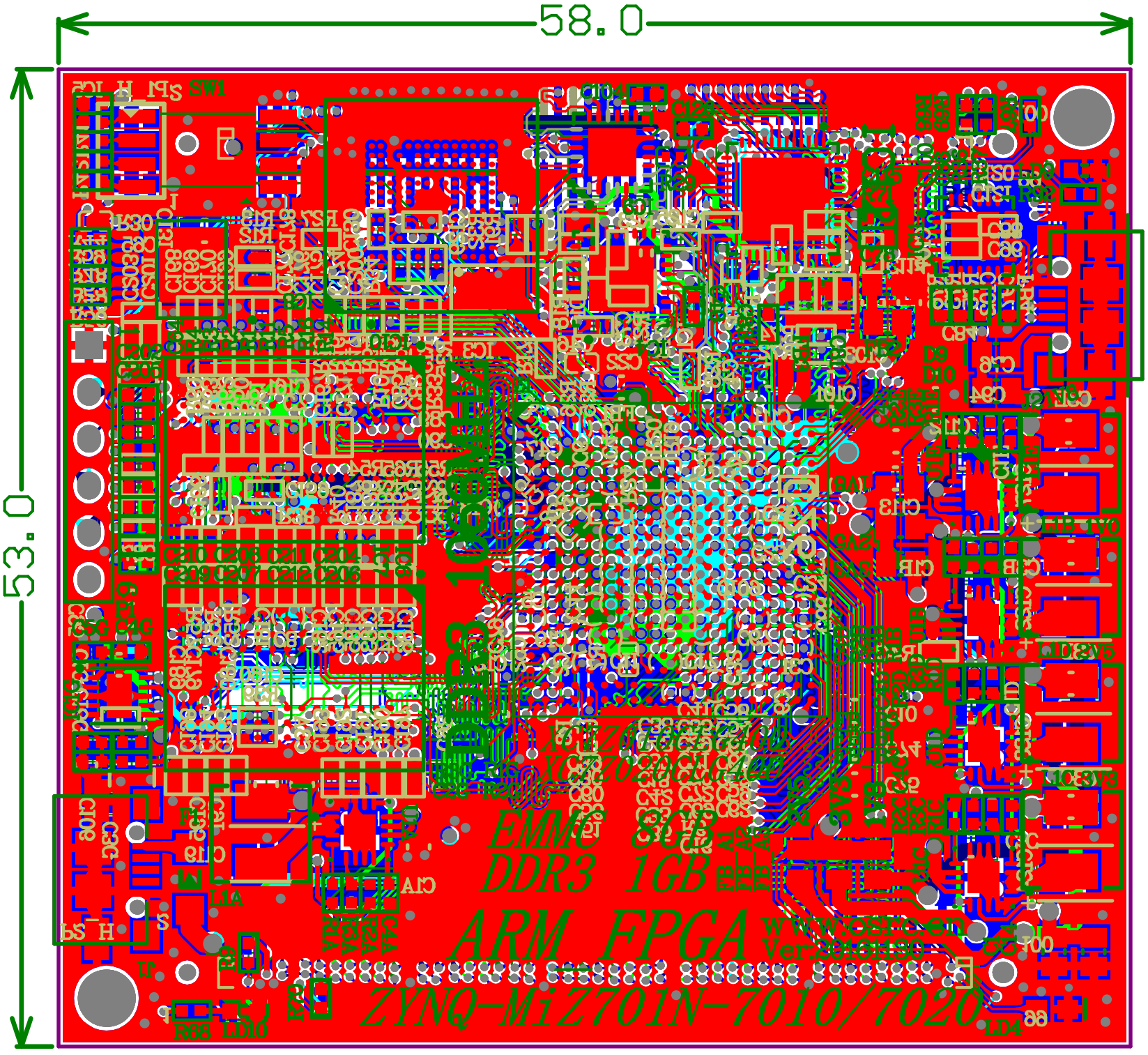
58.0
53.0
EMMC 8GB
DDR3 1GB
ARM FPGA
ZYNQ-MiZ701N-7010/7020