15-441 Computer Networking

Lecture 6 - Ethernet

Peter Steenkiste

Eric Anderson

Fall 2013

www.cs.cmu.edu/~prs/15-441-F13

Copyright ©, Carnegie Mellon 2007-13

Datalink Functions

- Framing: encapsulating a network layer datagram into a bit stream.
  - Add header, mark and detect frame boundaries, …
- Error control: error detection and correction to deal with bit errors.
  - May also include other reliability support, e.g. retransmission
- Flow control: avoid sender overrunning receiver.
- Media access: controlling which frame should be sent over the link next.
  - Easy for point-to-point links
  - Harder for multi-access links: who gets to send?

So far …

Can connect two nodes

- … But what if we want more nodes?

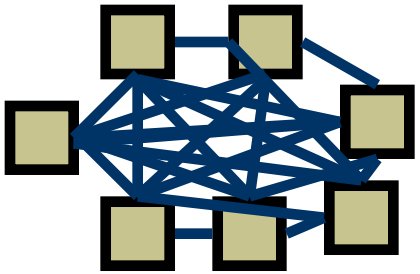

Wires for everybody!

So far …

Can connect two nodes

- … But what if we want more nodes?

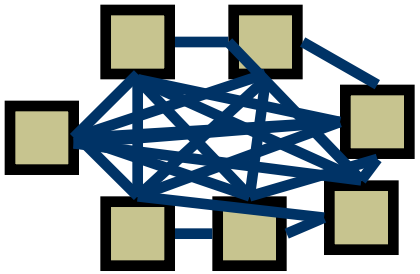

Wires for everybody!

Datalink Architectures

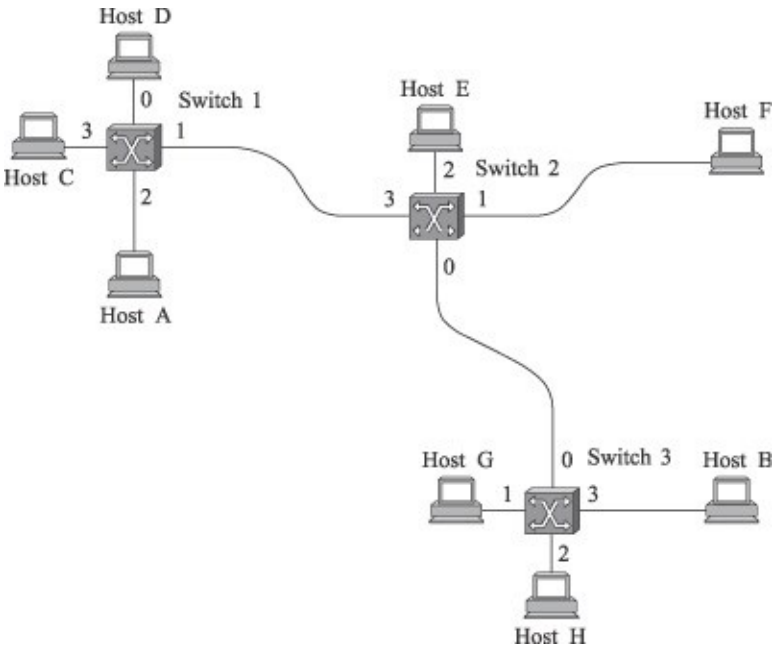

- Point-Point with switches

- Multiple access networks
- Media access control

Media Access Control

- How do we transfer packets between two hosts connected to the same network?
- Switches connected by point-to-point links -- store-and-forward.
  - Used in WAN, LAN, and for home connections
  - Conceptually similar to “routing”
    - But at the datalink layer instead of the network layer
- Multiple access networks -- contention based.
  - Multiple hosts are sharing the same transmission medium
  - Used in LANs and wireless
  - Need to control access to the medium

Datalink Classification

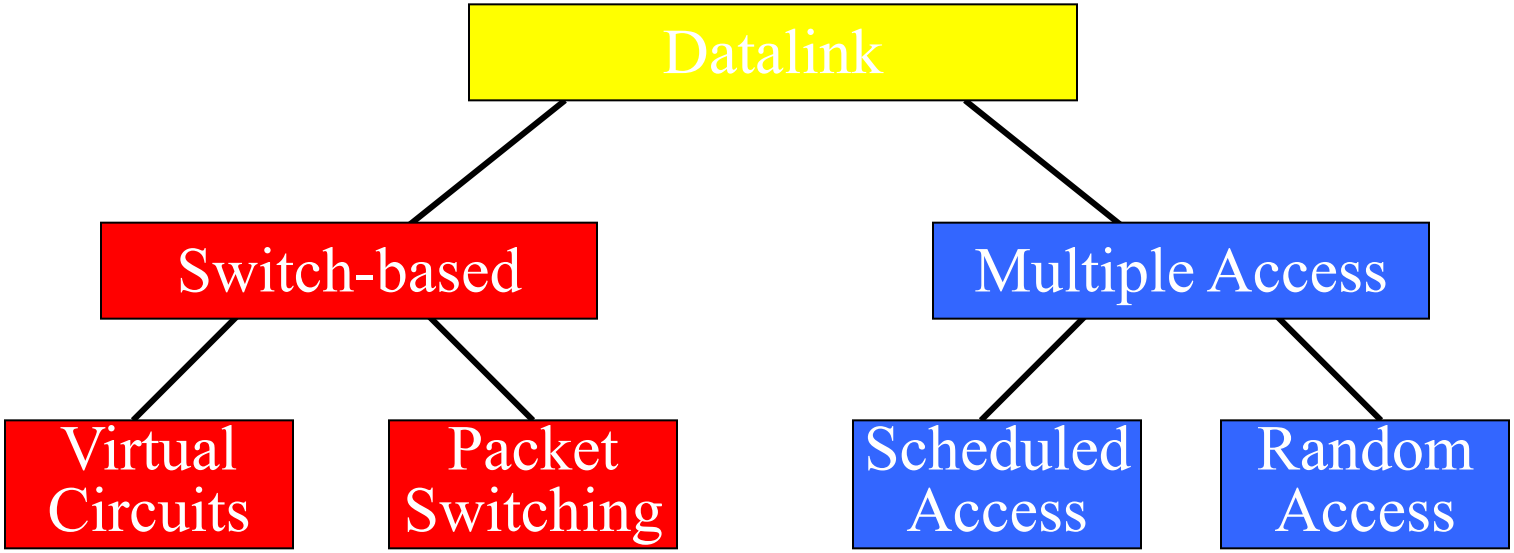

Switching

- Forward units of data based on address in header.
- Many data-link technologies use switching.
  - Virtual circuits: Frame Relay, ATM, X.25, ..
  - Packets: Ethernet, ...
- “Switching” also happens at the network layer.
  - Layer 3: Internet protocol
  - In this case, address is an IP address
  - IP over SONET, IP over ATM, ...
  - Otherwise, operation is very similar
- Switching is different from SONET mux/demux.
  - SONET channels statically configured - no addresses

A Switch-based Network

- Switches are connected by point-point links.
- Packets are forwarded hop-by-hop by the switches towards the destination.
  - Forwarding is based on the address
- How does a switch work?
- How do nodes exchange packets over a link?
- How is the destination addressed?

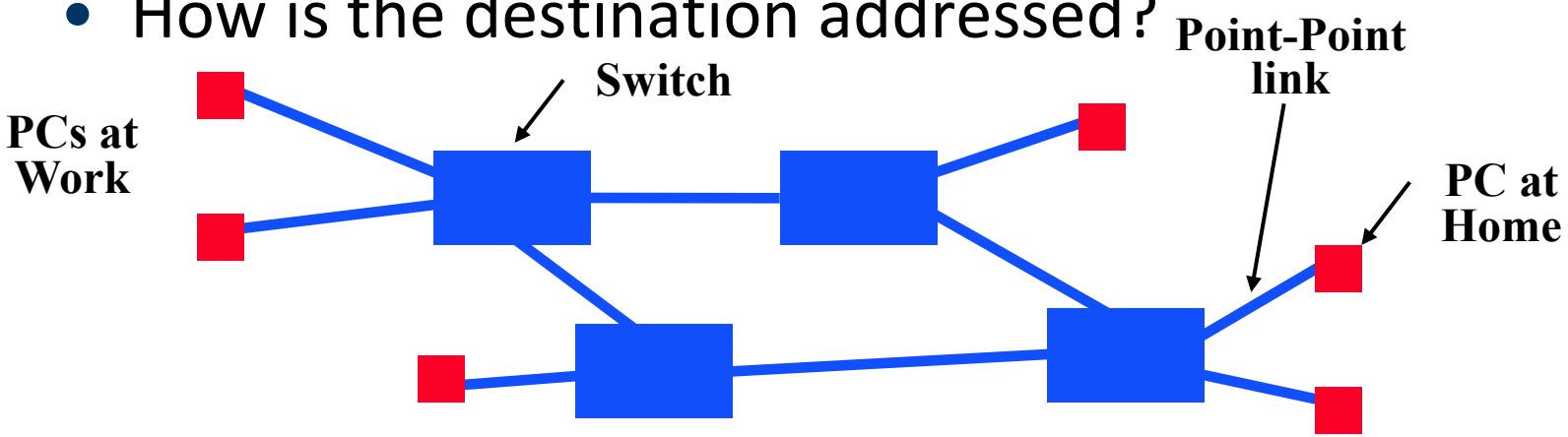

Switch Architecture

- Packets come in one interface, forwarded to output interface based on address.
  - Same idea for bridges, switches, routers: address look up differs
- Control processor manages the switch and executes higher level protocols.
  - E.g. routing, management, ...
- The switch fabric directs the traffic to the right output port.
- The input and output ports deal with transmission and reception of packets.

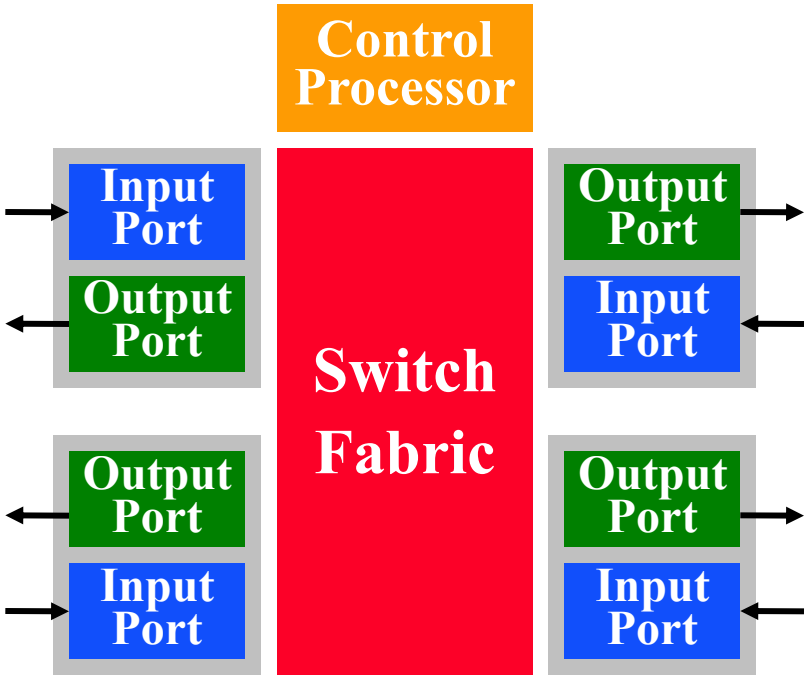

Connections or Not?

- Two basic approaches to packet forwarding
  - Connectionless
  - (virtual) Circuit switched

- When would you use?

Connectionless

- Host can send anytime anywhere
- No idea if resources are available to get to dest
- Forwarding is independent for each packet
- No setup time
- Fault tolerant
  - More on this later

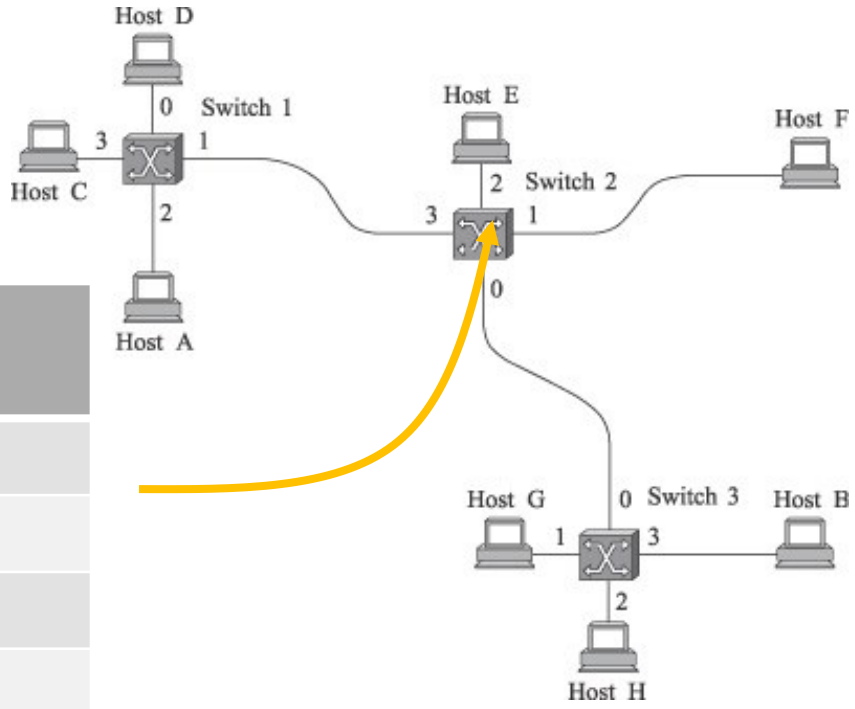

Destination	Port
A	3
B	0
C	
D	
E	

Packet Forwarding: Address Lookup

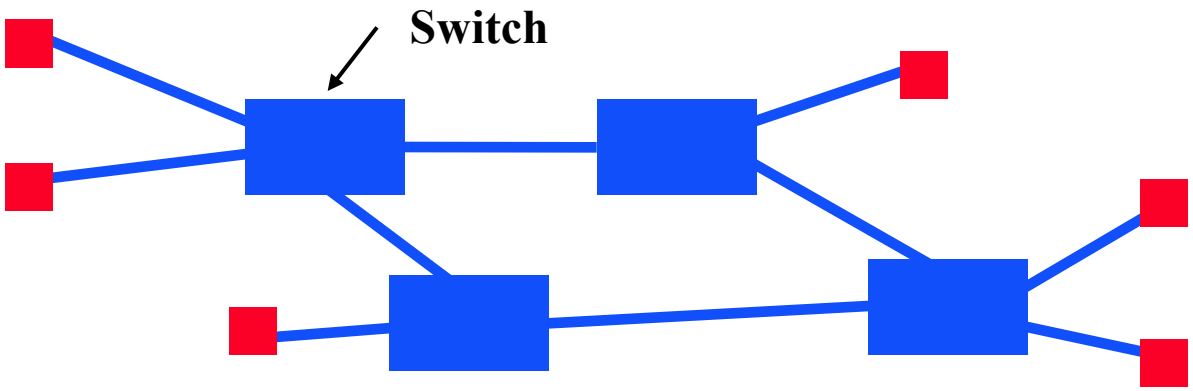

Address	Next Hop	Info
B31123812508	3	13
38913C3C2137	3	-
A21023C90590	0	-
128.2.15.1	1	(2,34)

- Address from header.
  - Absolute address (e.g. Ethernet)
  - (IP address for routers)
  - (VC identifier, e.g. ATM))
- Next hop: output port for packet.
- Info: priority, VC id, ..
- Table is filled in by protocol.

Datalink Classification

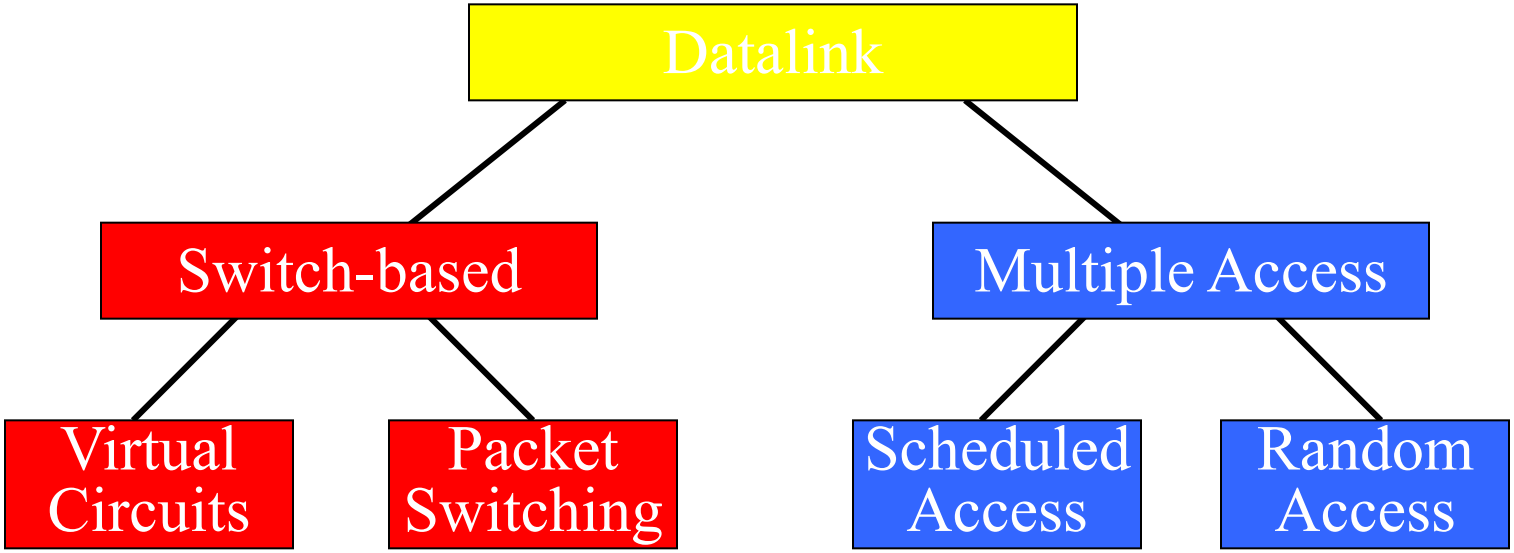

Problem: Sharing a Wire

Learned how to connect hosts

- … But what if we want more hosts?

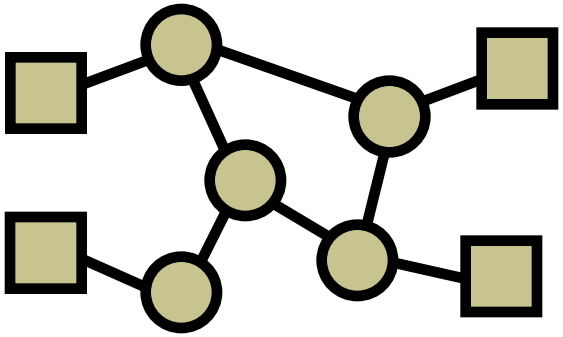

Switches

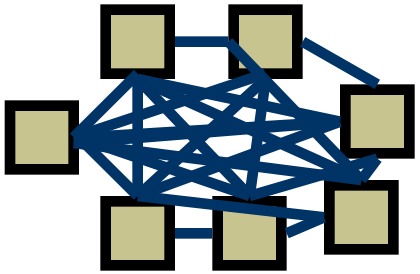

Wires for everybody!

- Expensive! How can we share a wire?

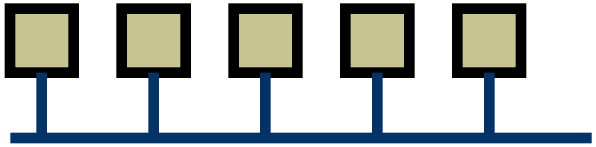

Listen and Talk

- Natural scheme – listen before you talk…
  - Works well in practice

Listen and Talk

- Natural scheme – listen before you talk…
  - Works well in practice

Listen and Talk

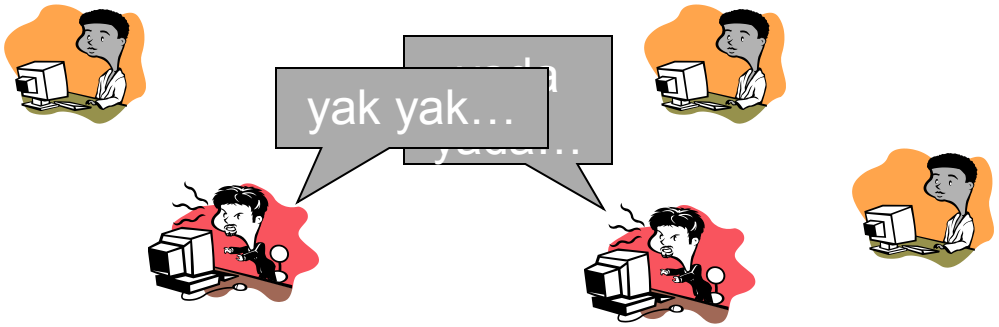

- Natural scheme – listen before you talk…
  - Works well in practice
- But sometimes this breaks down
  - Why? How do we fix/prevent this?

Problem: Who is this packet for?

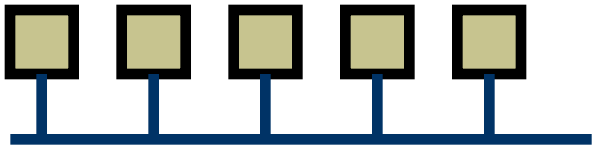

- Need to put an address on the packet
- What should it look like?
- How do you determine your own address?
- How do you know what address you want to send it to?

Outline

- Aloha
- Ethernet MAC
- Collisions
- Ethernet Frames

Random Access Protocols

- When node has packet to send
  - Transmit at full channel data rate R
  - No *a priori* coordination among nodes
- Two or more transmitting nodes → "collision"
- Random access MAC protocol specifies:
  - How to detect collisions
  - How to recover from collisions (e.g., via delayed retransmissions)
- Examples of random access MAC protocols:
  - Slotted ALOHA and ALOHA
  - CSMA and CSMA/CD

Aloha – Basic Technique

- First random MAC developed
  - For radio-based communication in Hawaii (1970)
- Basic idea:
  - When you are ready, transmit
  - Receivers send ACK for data
  - Detect collisions by timing out for ACK
  - Recover from collision by trying after random delay
    - Too short → large number of collisions
    - Too long → underutilization

Collisions in ALOHA

- Original ALOHA had no synchronization
- Pkt needs transmission:
  - Send without awaiting for beginning of slot
- Many chances for collision
  - Pkt sent at t_0 collide with other pkts sent in $[t_0-1, t_0+1]$

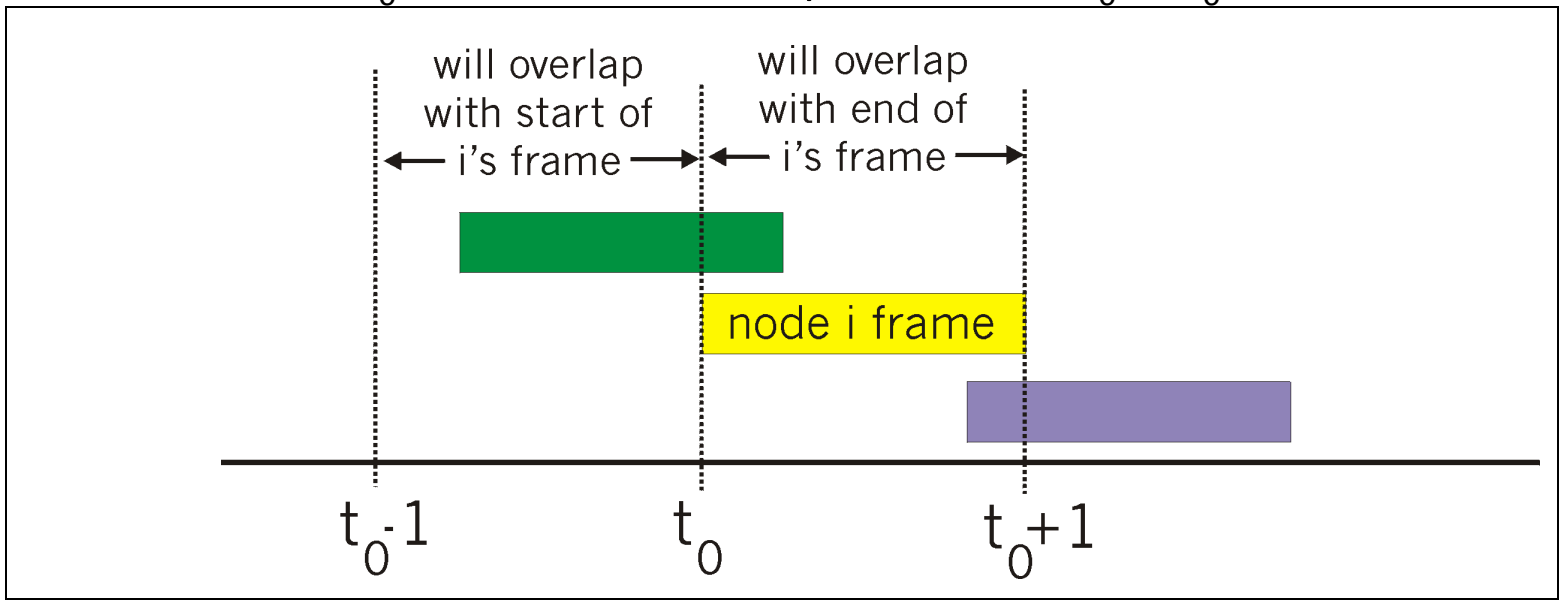

Outline

- Aloha
- Ethernet MAC
- Collisions
- Ethernet Frames

Ethernet

- First practical local area network, built at Xerox PARC in 70's
- "Dominant" LAN technology:
  - Cheap
  - Kept up with speed race: 10, 100, 1000, … Mbps

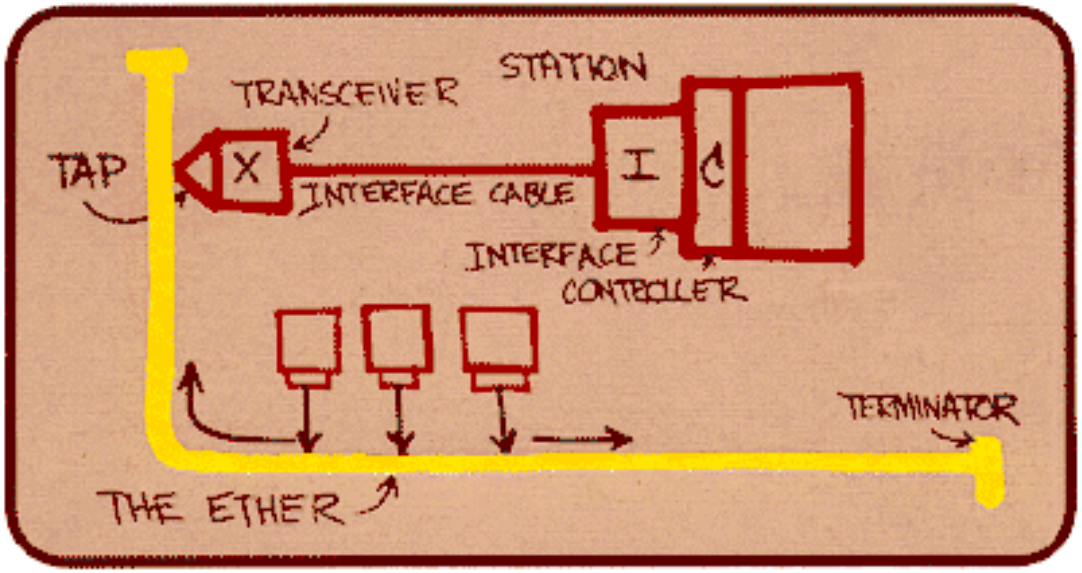

Ethernet MAC – Carrier Sense

- Basic idea:
  - Listen to wire before transmission
  - Avoid collision with active transmission
- Why didn't ALOHA have this?
  - In wireless, relevant contention at the receiver, not sender
    - Hidden terminal
    - Exposed terminal

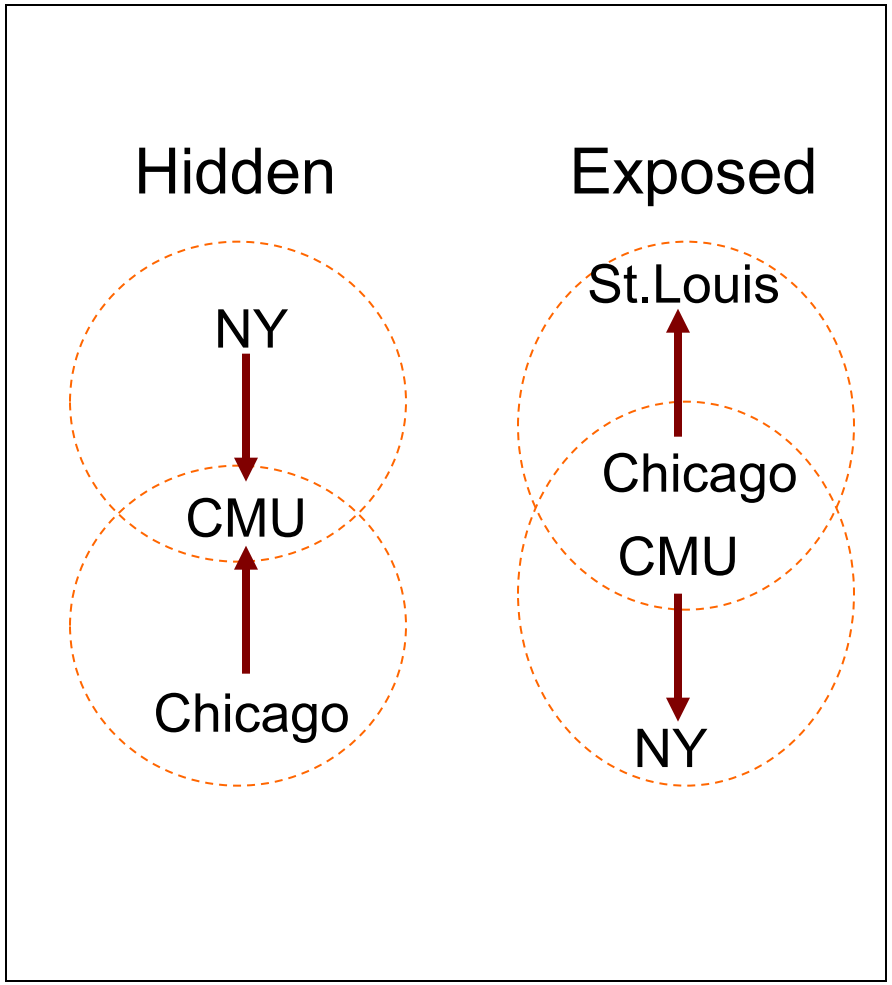

Ethernet MAC – Collision Detection

- But: ALOHA has collision detection also?
  - That was very slow and inefficient
- Basic idea:
  - Listen while transmitting
  - If you notice interference → assume collision
- Why didn't ALOHA have this?
  - Very difficult for radios to listen and transmit
  - Signal strength is reduced by distance for radio
    - Much easier to hear "local, powerful" radio station than one in NY
    - You may not notice any "interference"

Ethernet MAC (CSMA/CD)

- Carrier Sense Multiple Access/Collision Detection

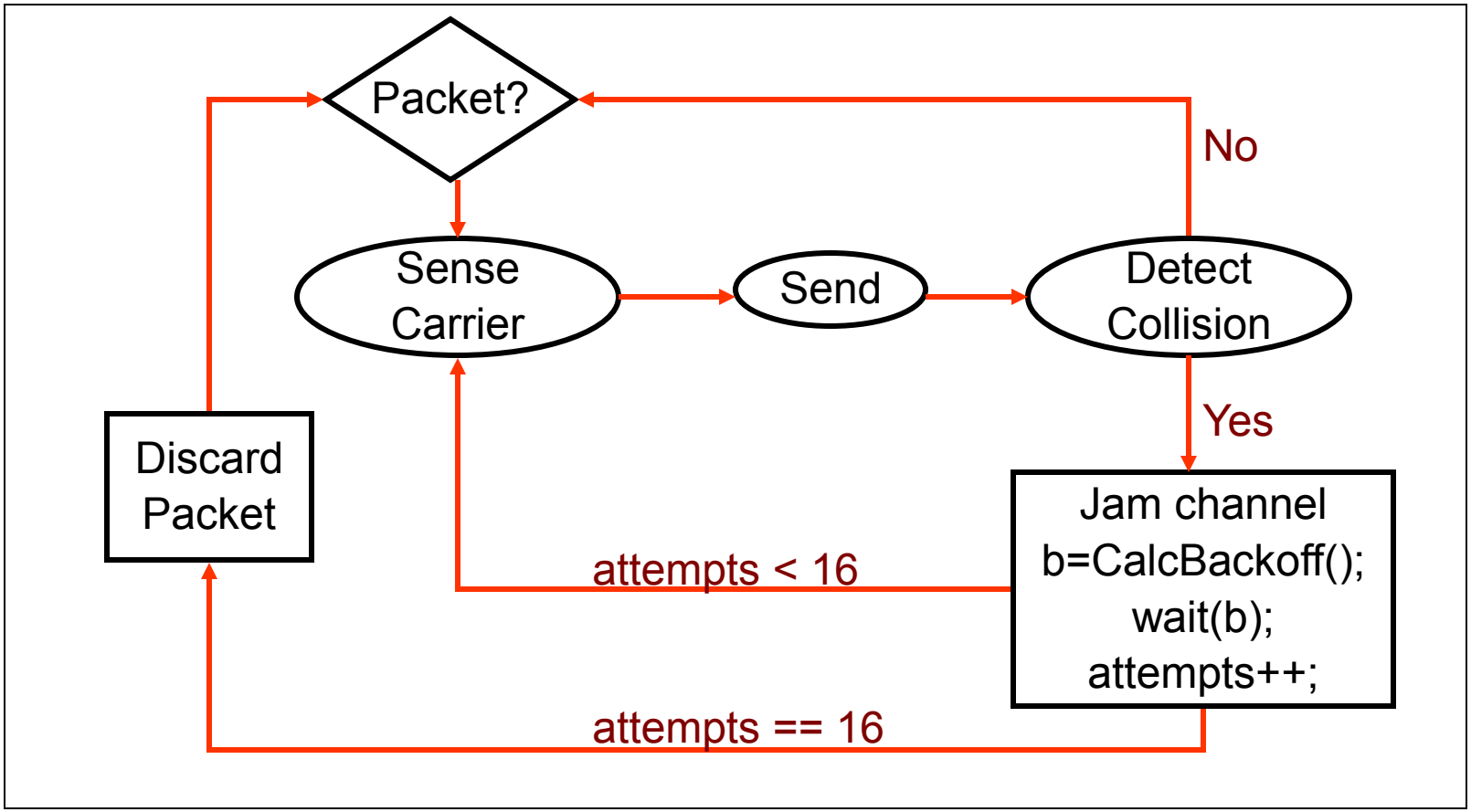

Ethernet CSMA/CD: Making it work

Jam Signal: make sure all other transmitters are aware of collision; 48 bits;

Exponential Backoff:

- If deterministic delay after collision, collision will occur again in lockstep
- Why not random delay with fixed mean?
  - Few senders → needless waiting
  - Too many senders → too many collisions
- *Goal*: adapt retransmission attempts to estimated current load
  - heavy load: random wait will be longer

Ethernet Backoff Calculation

- Exponentially increasing random delay
  - Infer senders from # of collisions
  - More senders → increase wait time
- First collision: choose K from {0,1}; delay is K x 512 bit transmission times
- After second collision: choose K from {0,1,2,3}…
- After ten or more collisions, choose K from {0,1,2,3,4,…,1023}

Outline

- Aloha
- Ethernet MAC
- Collisions
- Ethernet Frames

Collisions

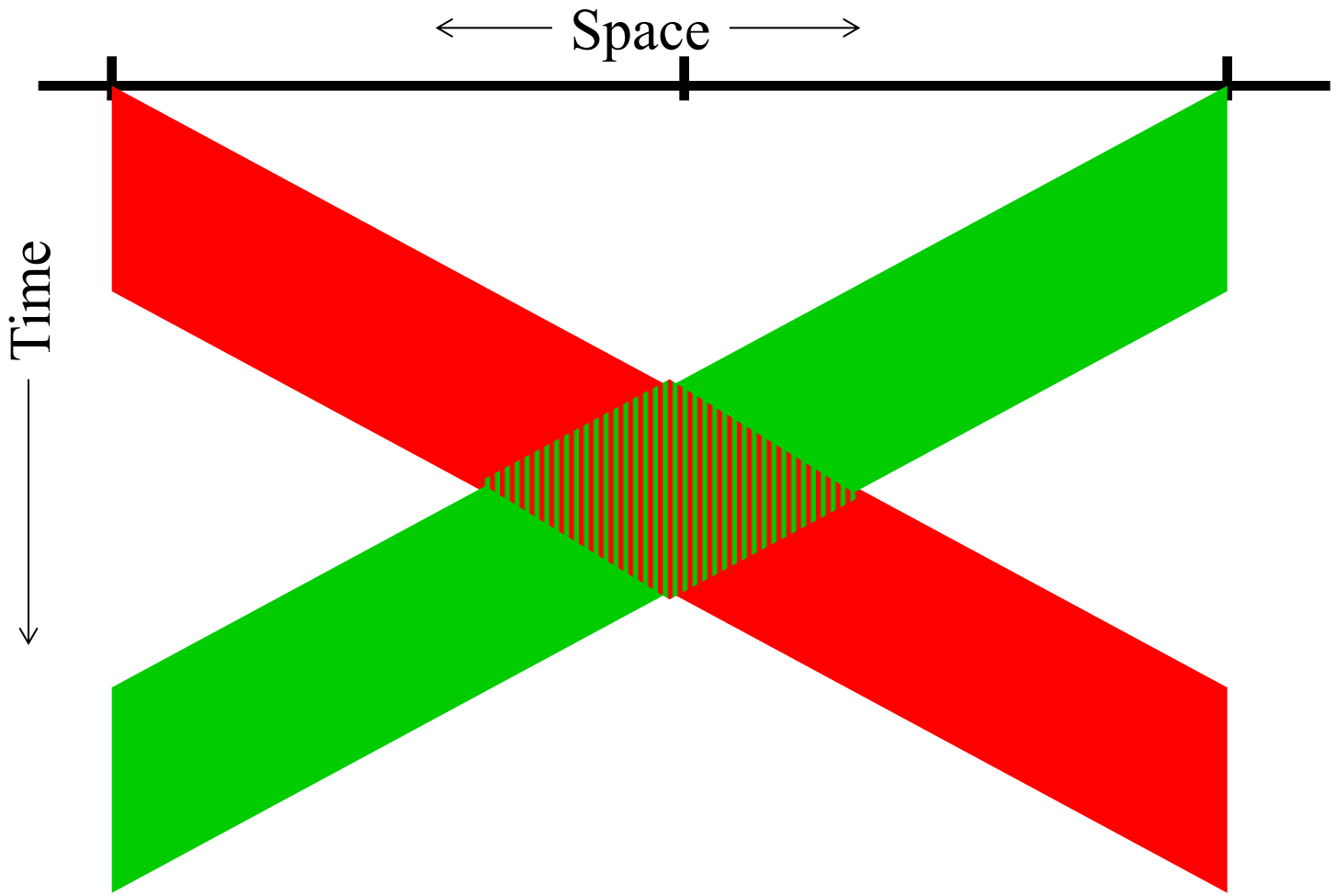

Delay & Collision Detection

- Speed in cable ~= 60% * c ~= 1.8 x 10^8 m/s
- 10Mb Ethernet
  - 2.5km, 10Mbps
  - ~= 12.5us delay
  - +Introduced repeaters (max 5 segments)
  - Worst case – 51.2us round trip time!
- Slot time = 51.2us = 512bits in flight
  - After this amount, sender is guaranteed sole access to link
  - 51.2us = slot time for backoff

Packet Size

- What about scaling? 3Mbit, 100Mbit, 1Gbit...
  - Original 3Mbit Ethernet did not have minimum packet size
    - Max length = 1Km and No repeaters
  - For higher speeds must make network smaller, minimum packet size larger or both
- What about a maximum packet size?
  - Needed to prevent node from hogging the network
  - 1500 bytes in Ethernet

Outline

- Aloha
- Ethernet MAC
- Collisions
- Ethernet Frames

Ethernet Frame Structure

- Sending adapter encapsulates IP datagram (or other network layer protocol packet) in Ethernet frame

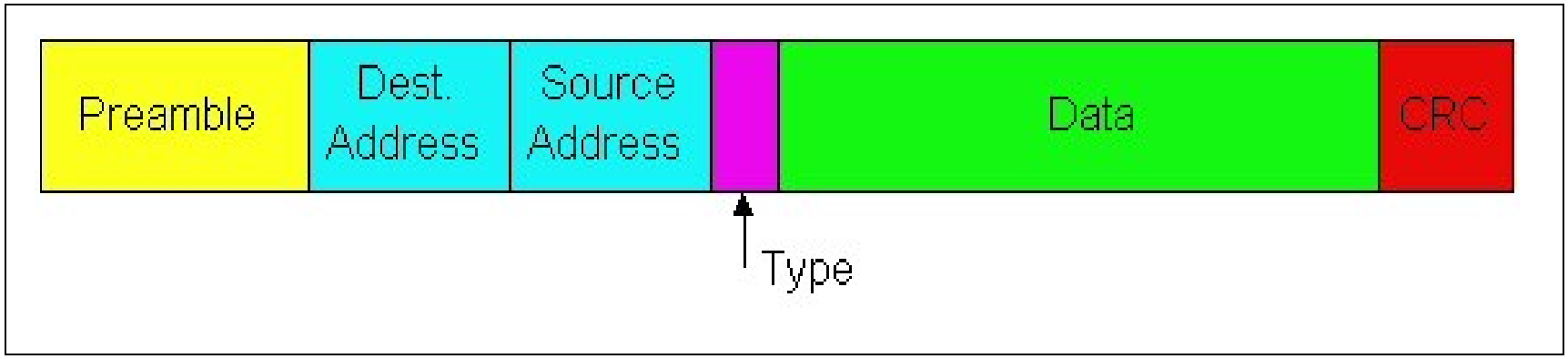

Ethernet Frame Structure (cont.)

- Preamble: 8 bytes
  - 101010…1011
  - Used to synchronize receiver, sender clock rates
- CRC: 4 bytes
  - Checked at receiver, if error is detected, the frame is simply dropped

Ethernet Frame Structure (cont.)

- Each protocol layer needs to provide some hooks to upper layer protocols
  - Demultiplexing: identify which upper layer protocol packet belongs to
  - E.g., port numbers allow TCP/UDP to identify target application
  - Ethernet uses Type field
- Type: 2 bytes
  - Indicates the higher layer protocol, mostly IP but others may be supported (such as Novell IPX and AppleTalk)

Addressing Alternatives

- Broadcast → all nodes receive all packets
  - Addressing determines which packets are kept and which are packets are thrown away
  - Packets can be sent to:
    - Unicast – one destination
    - Multicast – group of nodes (e.g. “everyone playing Quake”)
    - Broadcast – everybody on wire
- Dynamic addresses (e.g. Appletalk)
  - Pick an address at random
  - Broadcast “is anyone using address XX?”
  - If yes, repeat
- Static address (e.g. Ethernet)

Ethernet Address Assignment

- Each adapter is given a globally unique 6-byte address at manufacturing time
  - Address space is allocated to manufacturers
    - 24 bits identify manufacturer
    - E.g., 0:0:15:* → 3com adapter
  - Frame is received by all adapters on a LAN and dropped if address does not match
- Special addresses
  - Broadcast – FF:FF:FF:FF:FF:FF is “everybody”
  - Range of addresses allocated to multicast
    - Adapter maintains list of multicast groups node is interested in

Why Did Ethernet Win?

- Failure modes
  - Token rings – network unusable
  - Ethernet – node detached
- Good performance in common case
  - Deals well with bursty traffic
  - Usually used at low load
- Volume → lower cost → higher volume ….
- Adaptable
  - To higher bandwidths (vs. FDDI)
  - To switching (vs. ATM)
- Easy incremental deployment
- Cheap cabling, etc

And .. It is Easy to Manage

- You plug in the host and it basically works
  - No configuration at the datalink layer
  - Today: may need to deal with security
- Protocol is fully distributed
- Broadcast-based.
  - In part explains the easy management
  - Some of the LAN protocols (e.g. ARP) rely on broadcast
    - Networking would be harder without ARP
  - Not having natural broadcast capabilities adds complexity to a LAN
    - Example: ATM

Ethernet Problems: Unstable at High Load

- Peak throughput worst with
  - More hosts – more collisions to identify single sender
  - Smaller packet sizes – more frequent arbitration
  - Longer links – collisions take longer to observe, more wasted bandwidth
- But works well in practice
  - Can improve above

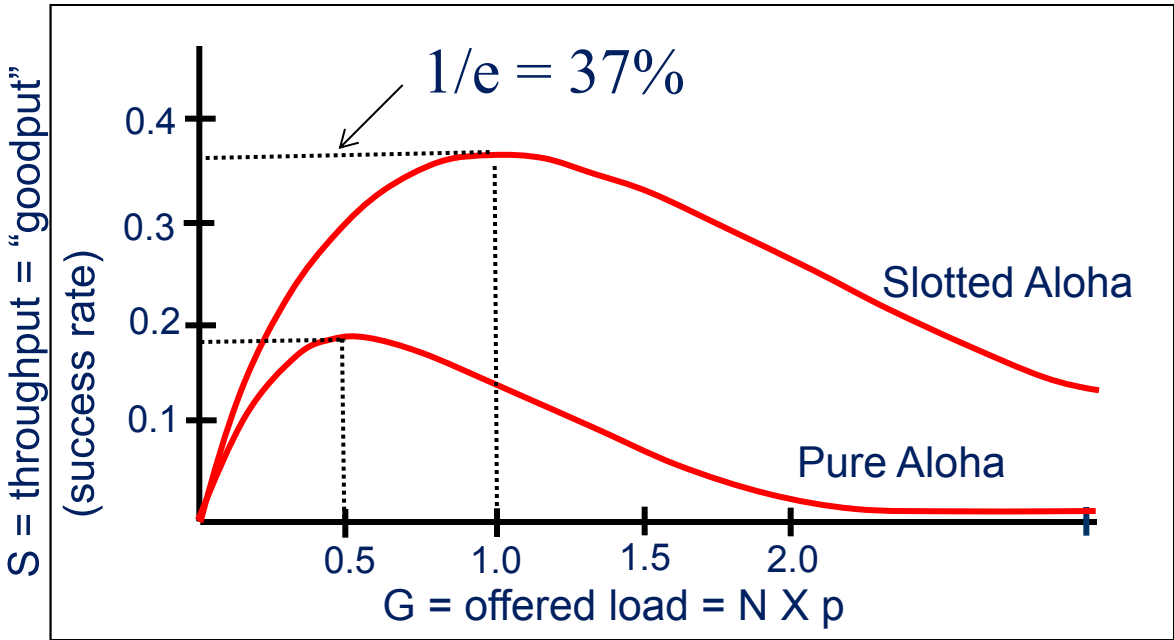

Summary

- CSMA/CD → carrier sense multiple access with collision detection
  - Why do we need exponential backoff?
  - Why does collision happen?
  - Why do we need a minimum packet size?
    - How does this scale with speed?
- Ethernet
  - What is the purpose of different header fields?
  - What do Ethernet addresses look like?
- What are some alternatives to Ethernet design?

Multiple Access Protocols

- Prevent two or more nodes from transmitting at the same time over a broadcast channel.
  - If they do, we have a collision, and receivers will not be able to interpret the signal
- Several classes of multiple access protocols.
  - Partitioning the channel, e.g. frequency-division or time division multiplexing
    - With fixed partitioning of bandwidth –
    - Not flexible; inefficient for bursty traffic
  - Taking turns, e.g. token-based, reservation-based protocols, polling based
  - Contention based protocols, e.g. Aloha, Ethernet
    - Next lecture

Fiber Distributed Data Interface (FDDI)

- One token holder may send, with a time limit
  - Provides known upper bound on delay.
- Optical version of 802.5 token ring, but multiple packets may travel in train: token released at end of frame
- 100 Mbps, 100km
- Optional dual ring for fault tolerance
- Concerns:
  - Token overhead
  - Latency
  - Single point of failure

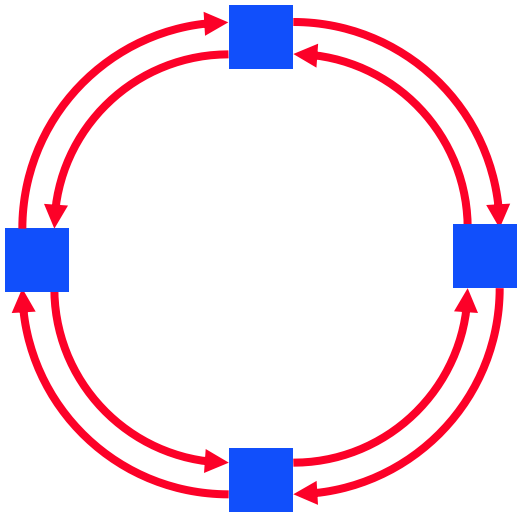

Other "Taking Turn" Protocols

- Central entity polls stations, inviting them to transmit
  - Simple design – no conflicts
  - Not very efficient – overhead of polling operation
  - Example: the "Point Control Function" mode for 802.11
- Stations reserve a slot for transmission.
  - For example, break up the transmission time in contention-based and reservation based slots
    - Contention based slots can be used for short messages or to reserve time slots
    - Communication in reservation based slots only allowed after a reservation is made
  - Issues: fairness, efficiency

MAC Protocols - Discussion

- Channel partitioning MAC protocols:
  - Share channel efficiently at high load
  - Inefficient at low load: delay in channel access, 1/N bandwidth allocated even if only 1 active node!
- "Taking turns" protocols
  - More flexible bandwidth allocation, but
  - Protocol can introduce unnecessary overhead and access delay at low load
- Random access MAC protocols (next lecture)
  - Efficient at low load: single node can fully utilize channel
  - High load: collision overhead