Lecture 8 Recurrent Neural Networks and Language Models

Notebook:	cs224N Natural Language Processing		
Created:	2019/5/29 23:02	**Updated:**	2019/5/30 20:39
Author:	wzy816@gmail.com		

Traditional Language Models

- Performance improves with keeping around higher n-grams counts and doing smoothing and so-called backoff (e.g. if 4-gram not found, try 3-gram, etc)
- There are A LOT of n-grams!
  → Gigantic RAM requirements!
- Recent state of the art: *Scalable Modified Kneser-Ney Language Model Estimation* by Heafield et al.:
  "Using one machine with 140 GB RAM for 2.8 days, we built an unpruned model on 126 billion tokens"

2/2/17

Reuse weights

Recurrent Neural Networks!

- RNNs tie the weights at each time step
- Condition the neural network on all previous words
- RAM requirement only scales with number of words

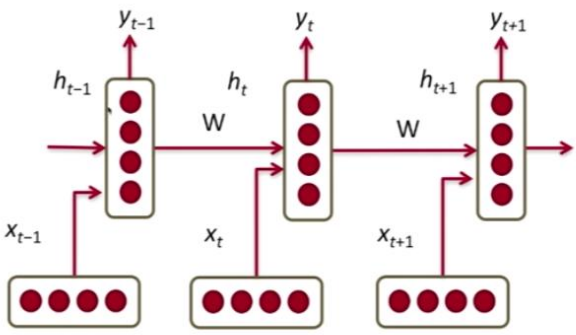

2/2/17

Recurrent Neural Network language model

Evaluation could just be negative of average log probability over dataset of size (number of words) T:

$$J = -\frac{1}{T}\sum_{t=1}^{T}\sum_{j=1}^{|V|} y_{t,j} \log \hat{y}_{t,j}$$

But more common: Perplexity: 2^J

Lower is better!

Vanish gradient problem/ exploding gradient

Recap

- Recurrent Neural Network is one of the best deepNLP model families
- Training them is hard because of vanishing and exploding gradient problems
- They can be extended in many ways and their training improved with many tricks (more to come)
- Next week: Most important and powerful RNN extensions with LSTMs and GRUs