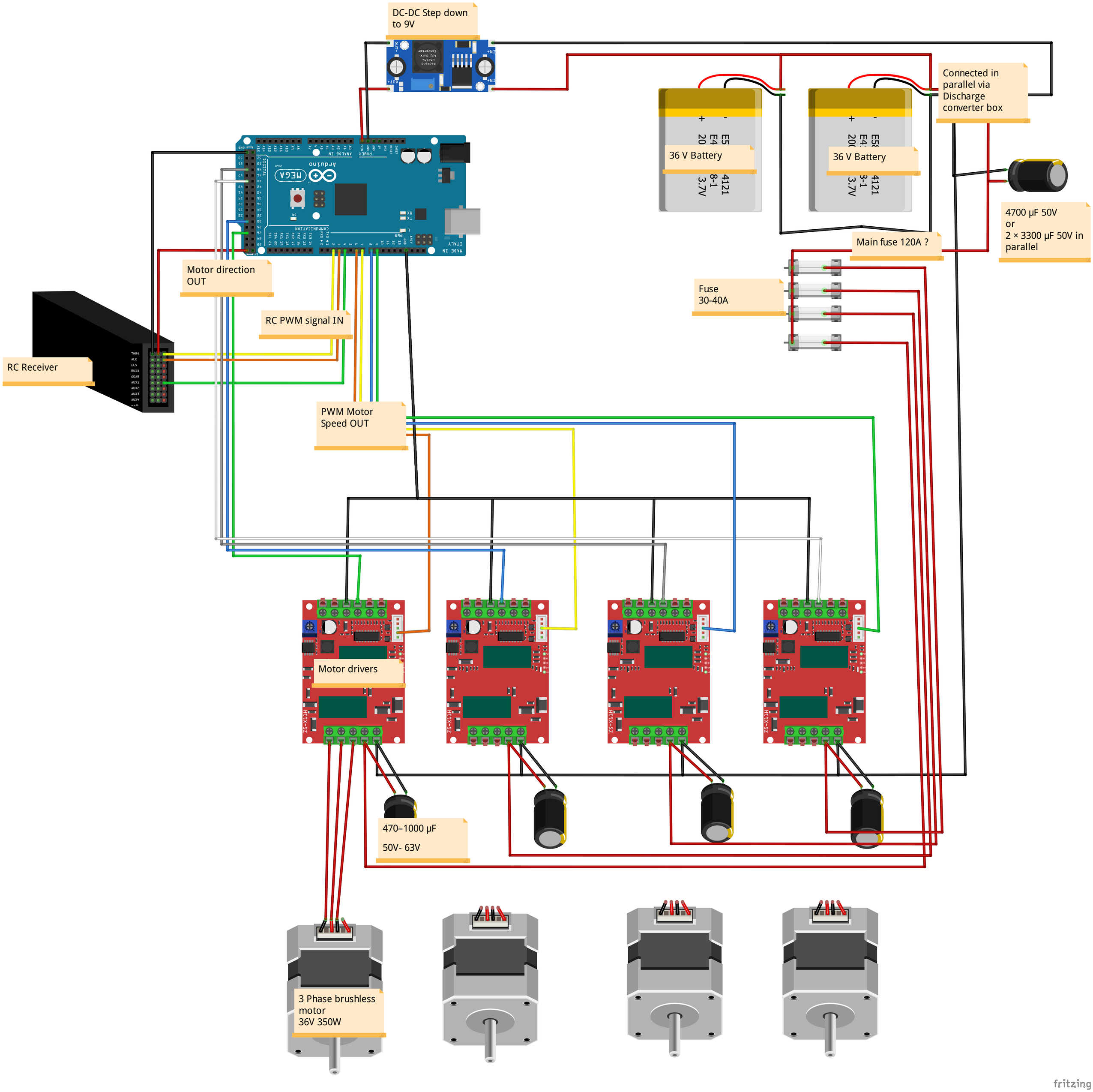
DC-DC Step down to 9V
Connected in parallel via Discharge converter box
36 V Battery
36 V Battery
4700 µF 50V or 2 × 3300 µF 50V in parallel
Main fuse 120A ?
Fuse 30-40A
Motor direction OUT
RC PWM signal IN
RC Receiver
PWM Motor Speed OUT
Motor drivers
470–1000 µF
50V- 63V
3 Phase brushless motor 36V 350W
fritzing