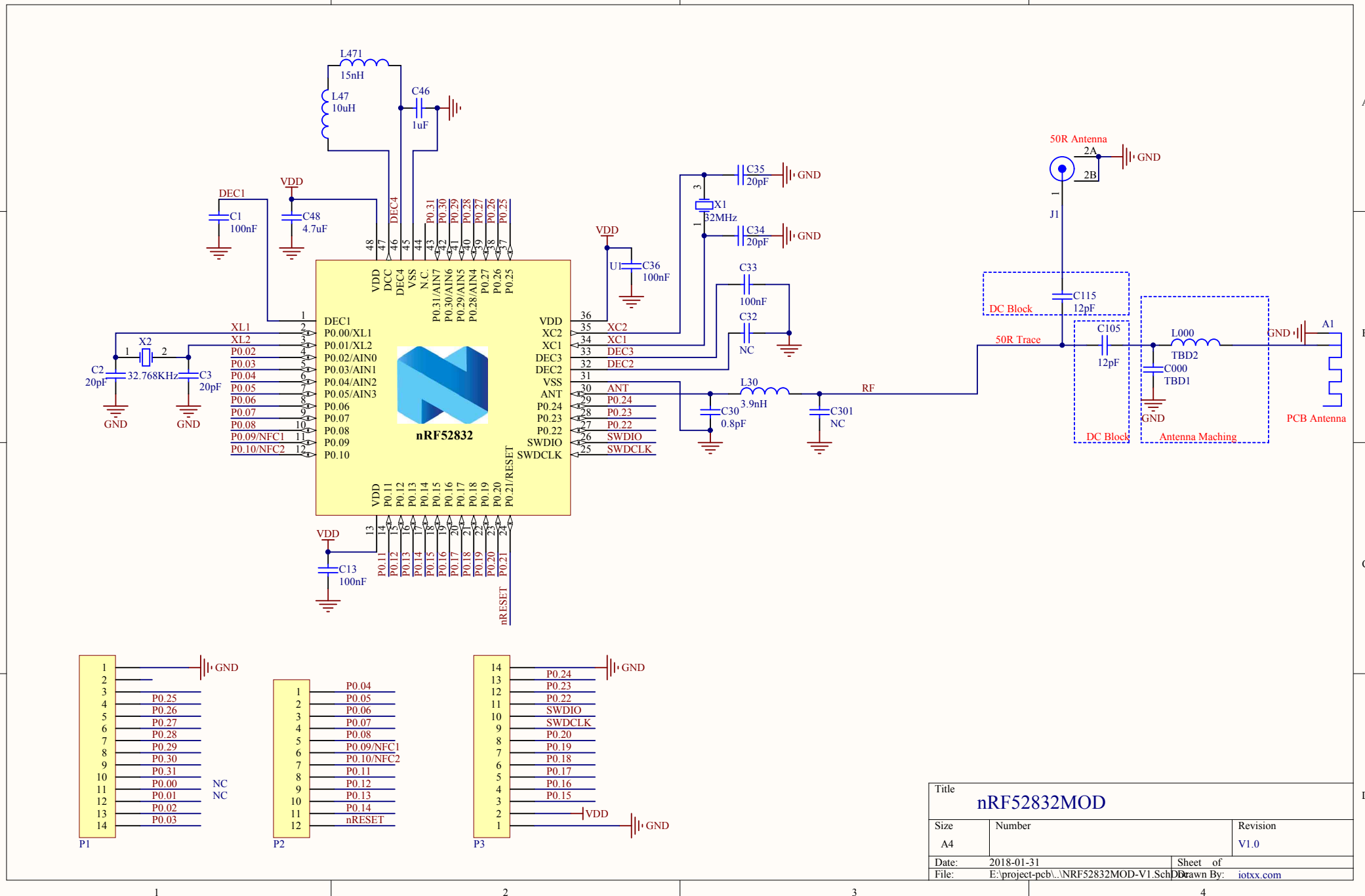
L471
15nH
L47
10uH
C46
1uF
DEC1
C1
100nF
VDD
C48
4.7uF
U1
C36
100nF
C35
20pF
GND
X1
32MHz
C34
20pF
C33
100nF
C32
NC
XL1
XL2
X2
32.768KHz
C2
20pF
C3
20pF
nRF52832
L30
3.9nH
C30
0.8pF
C301
NC
RF
50R Antenna
2A
2B
J1
C115
12pF
DC Block
50R Trace
C105
12pF
L000
TBD2
C000
TBD1
Antenna Maching
A1
PCB Antenna
C13
100nF
nRESET
P1
P2
P3
NC
Title
nRF52832MOD
Size
A4
Number
Revision
V1.0
Date:
2018-01-31
Sheet of
File:
E:\project-pcb\..\NRF52832MOD-V1.SchDoc
Drawn By:
iotxx.com