Buffet Cabinet

Product ID. 7AZYV

Scan for Support

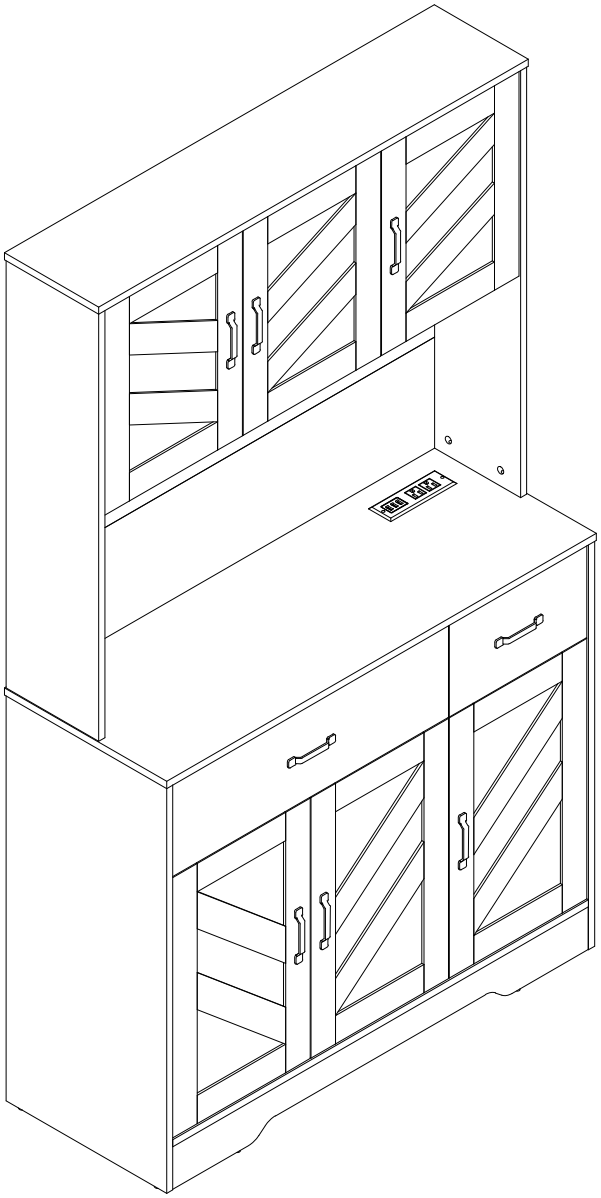

Distributed by

GARVEE.com

support@garvee.com

EN

Thank you for purchase on our products. Please contact us if you have difficulty with assembly or need replacement parts. Our customer service is here to assist you. Please attach your User Name or Order ID so that we can assist you better.

WARNING

Serious or fatal injury may occur from unexpected assembly or use.

1. During the assembly process, keep all parts away from babies or children.
2. Always securely fix this product to the wall. Make sure the wall area to be drilled is free from hidden electrical wires, water and gas pipes.
3. Use of tip-over restraints may only reduce, but not eliminate the risk of tip-over.
4. Unless specially designed to accommodate, do not set heavy objects on top of this product.
5. Place the heaviest items on the lowest shelf.
6. Never allow children to climb or bang on drawers, doors or shelves.

FR

Merci d'avoir acheté sur nos produits. Veuillez nous contacter si vous rencontrez des difficultés avec
montage ou besoin de pièces de rechange. Notre service client est là pour vous aider. Veuillez joindre votre nom d'utilisateur ou votre numéro de commande afin que nous puissions mieux vous aider.

ATTENTION

Des blessures graves ou mortelles peuvent résulter d'un assemblage ou d'une utilisation imprévus.

1. Pendant le processus d'assemblage, gardez toutes les pièces hors de portée des bébés ou des enfants.
2. Fixez toujours solidement ce produit au mur. Assurez-vous que la surface du mur à percer est exempt de fils électriques cachés, de conduites d'eau et de gaz.
3. L'utilisation de dispositifs de retenue en cas de basculement peut seulement réduire, mais pas éliminer, le risque de basculement.
4. À moins qu'il ne soit spécialement conçu pour accueillir, ne placez pas d'objets lourds sur ce produit.
5. Placez les articles les plus lourds sur l'étagère la plus basse.
6. Ne laissez jamais les enfants grimper ou cogner sur les tiroirs, les portes ou les étagères.

Parts List

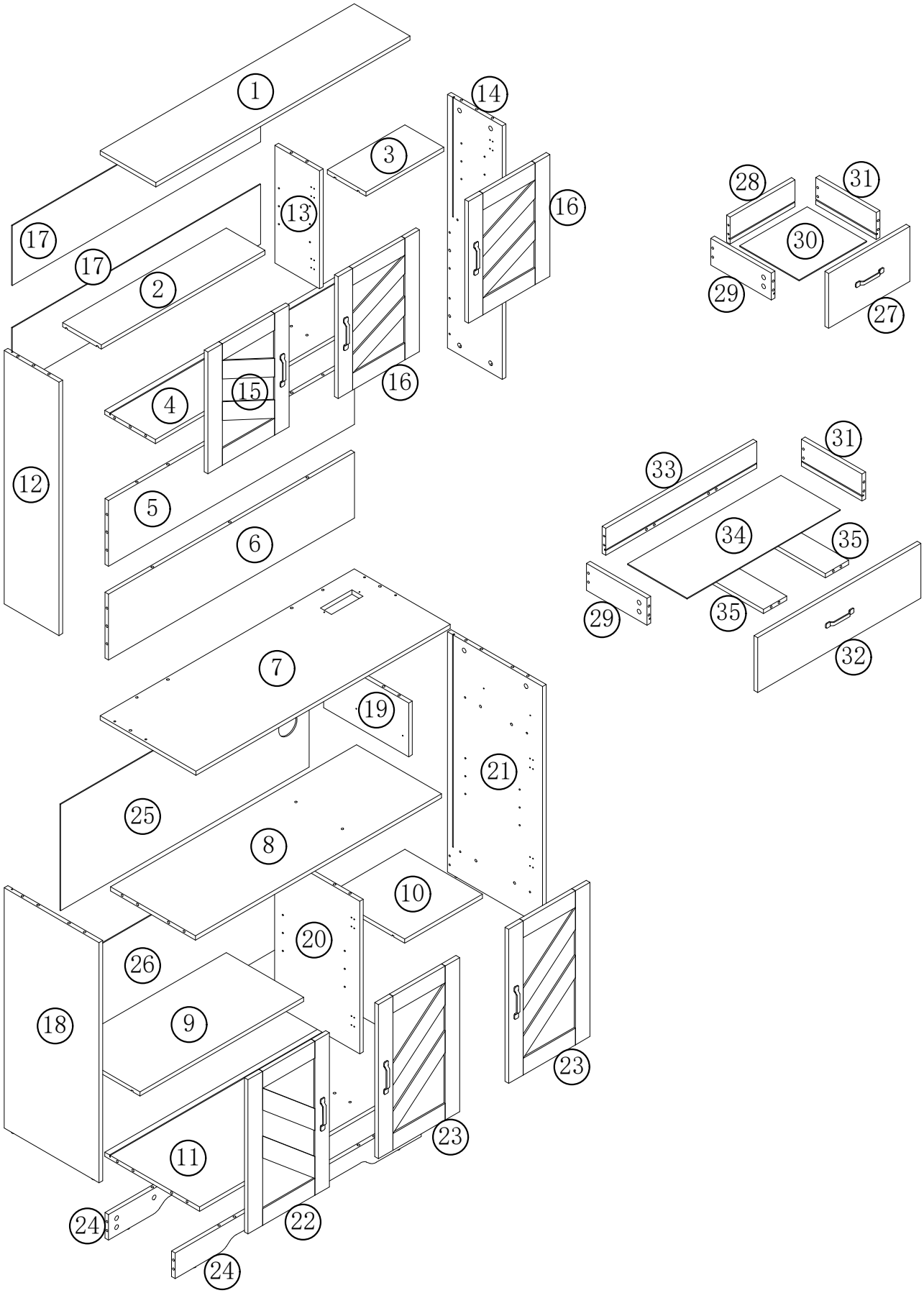
1
14
3
28
31
16
13
30
17
17
2
29
27
16
15
4
31
33
12
5
34
35
6
29
35
32
7
19
21
25
8
10
20
26
18
9
23
23
11
24
22
24

Parts List

① 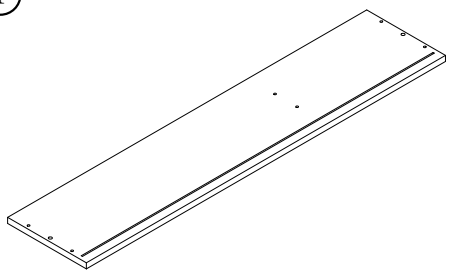 X1	② 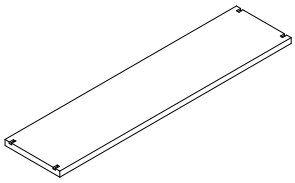 X1	③ 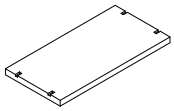 X1
④ 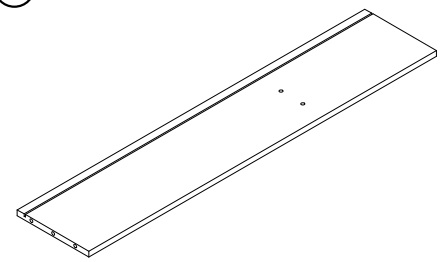 X1	⑤ 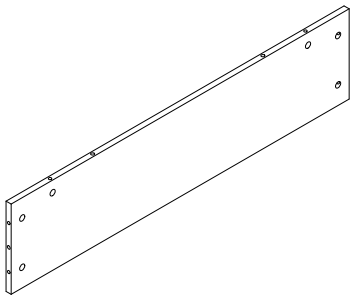 X1	⑥ 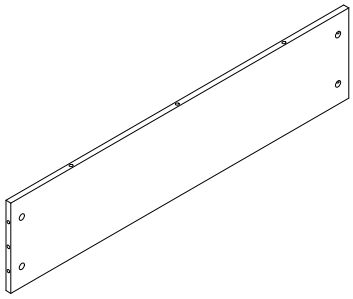 X1
⑦ 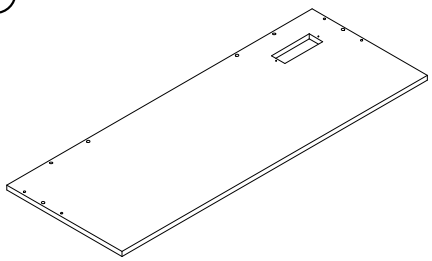 X1	⑧ 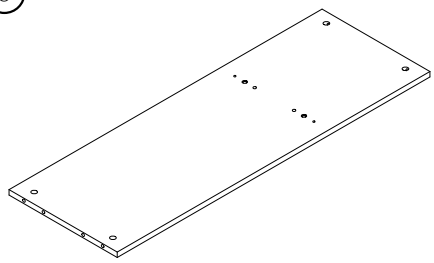 X1	⑨ 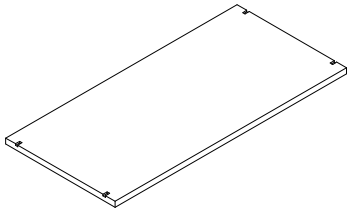 X1
⑩ 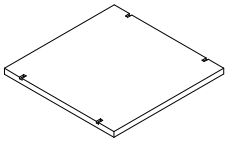 X1	⑪ 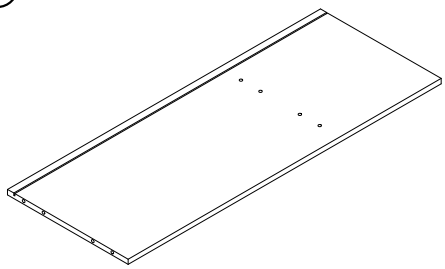 X1	⑫ X1
⑬ 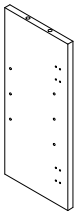 X1	⑭ 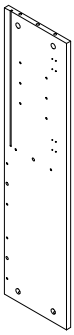 X1	⑮ 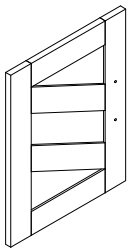 X1
⑯ 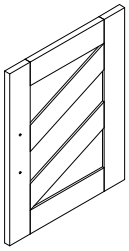 X2	⑰ 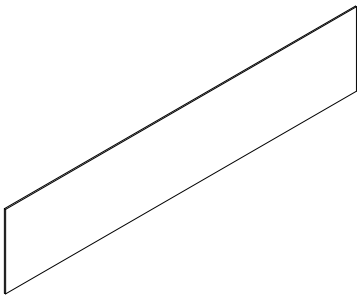 X2	⑱ 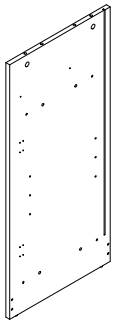 X1

Parts List

19 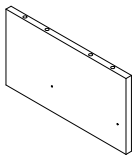 X1	20 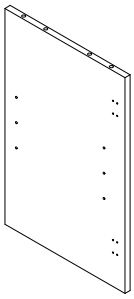 X1	21 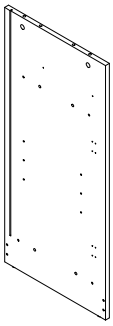 X1
22 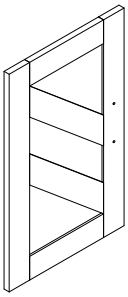 X1	23 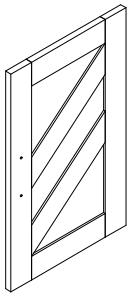 X2	24 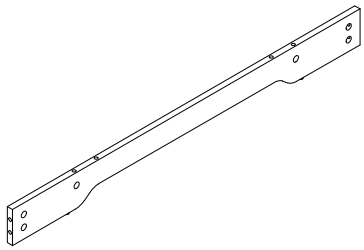 X2
25 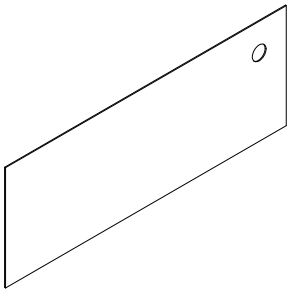 X1	26 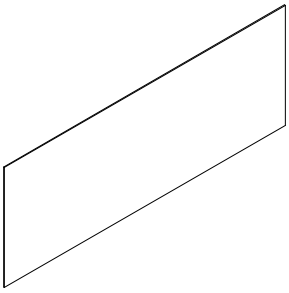 X1	27 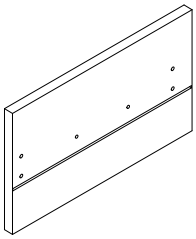 X1
28 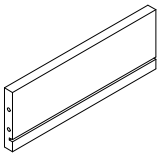 X1	29 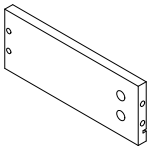 X2	30 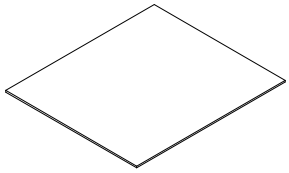 X1
31 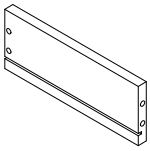 X2	32 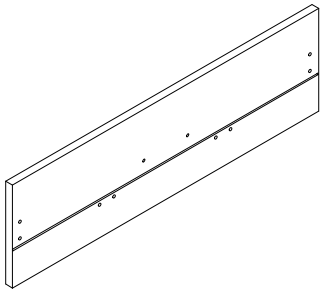 X1	33 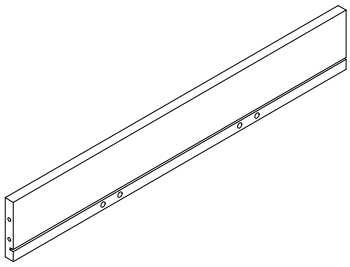 X1
34 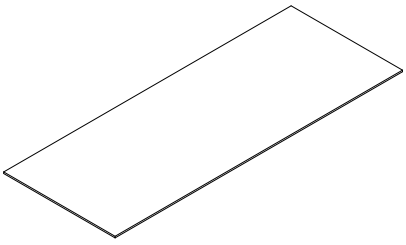 X1	35 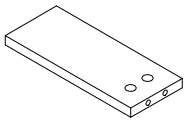 X2	

Hardware List

A M15x11mm X64	B KM6x40mm X64	C M7x50mm X20	D M4x18mm X16
E M3.5x14mm X90	F M3.5x16mm X16	G 8x50mm 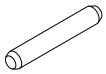 X39	H 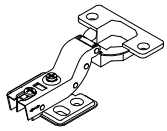 X12
I L 250mm 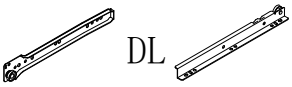 X2	X2	J X16	K 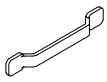 X8
L 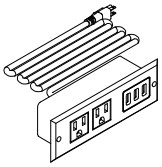 X1	M X16	N 1014mm 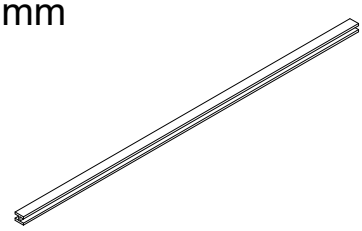 X2	
O Ø21mm X4	P 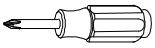 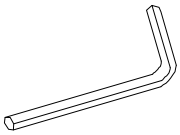 X1		

If there are missing screws or accessories, please contact us in time via the email address support@garvee.com

Tools required

Phillips Screwdriver

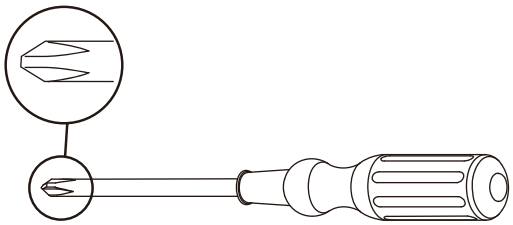

Straight Screwdriver

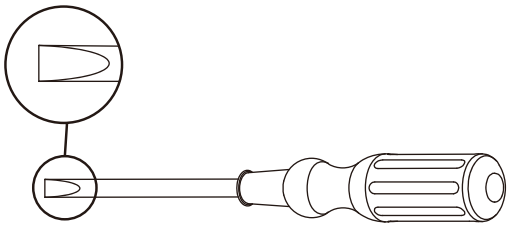

Power Tool NOT Recomemended

To ensure proper assembly we have included the following guides:

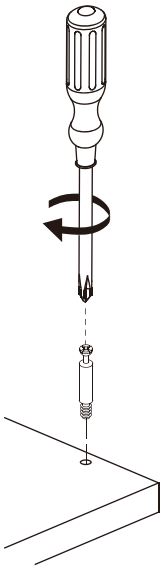

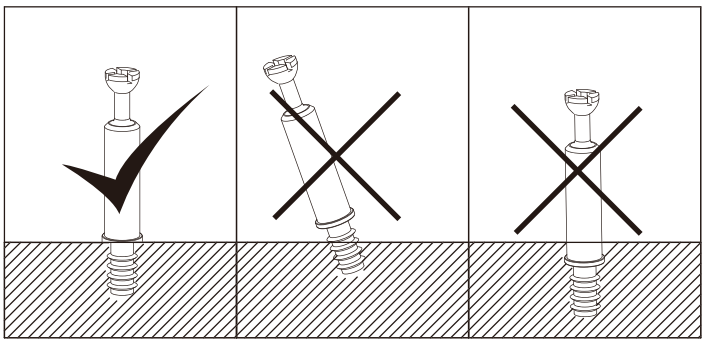

Insert threads of Locking Bolts completely，and stop once threads are no longer visible.

Do NOT overturn.

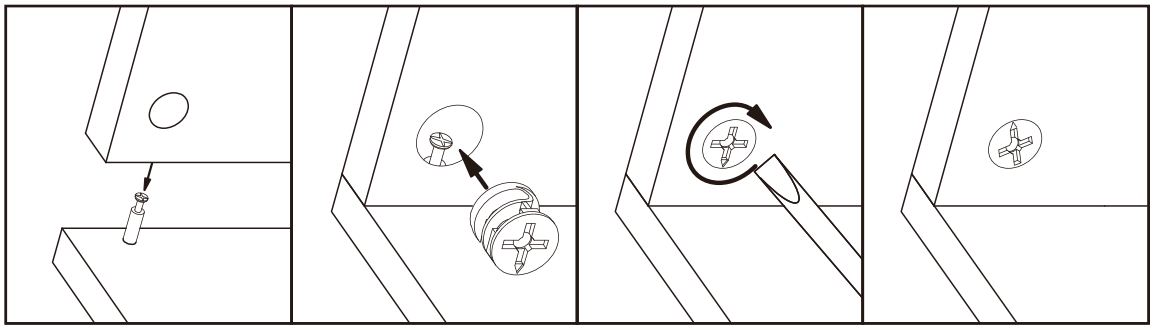

Reference this guide when assembling all Cam Locks.

Do NOT overturn.

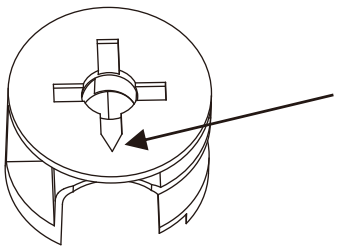

Notice:"pointer arrow"on cam face the Bolt when inserted the cam.

STEP 1

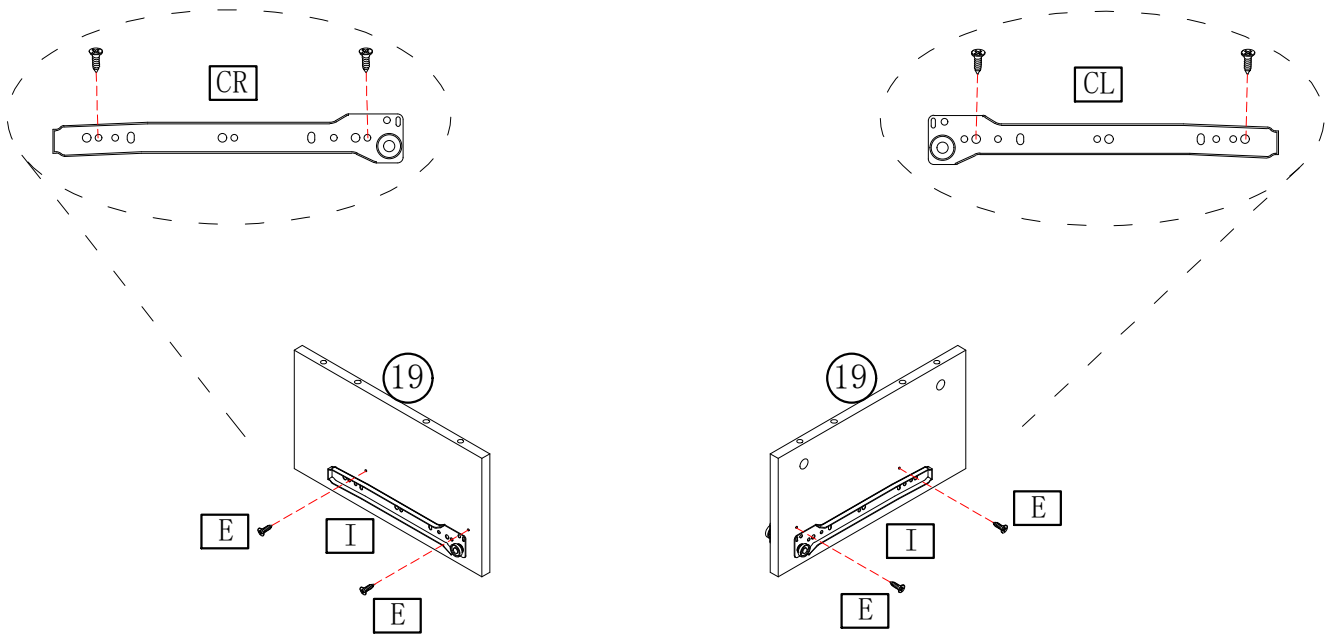

E M3.5*14 *4	I 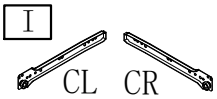 CL CR *1

STEP 2

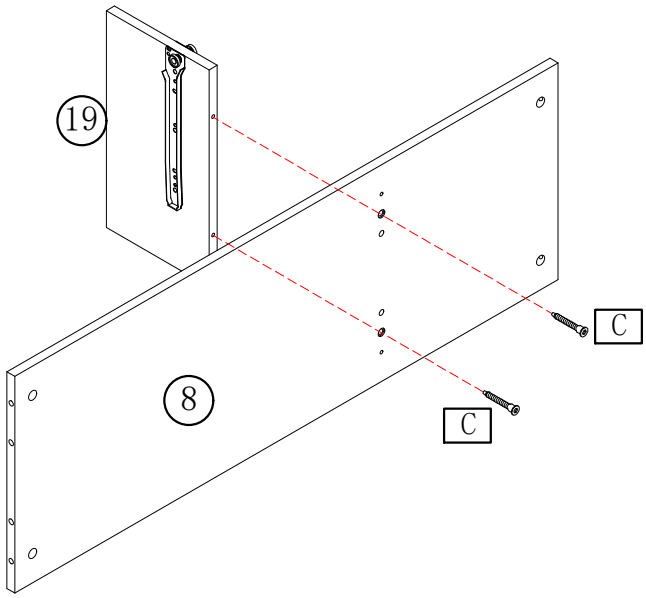

C M7*50 *2

STEP 3

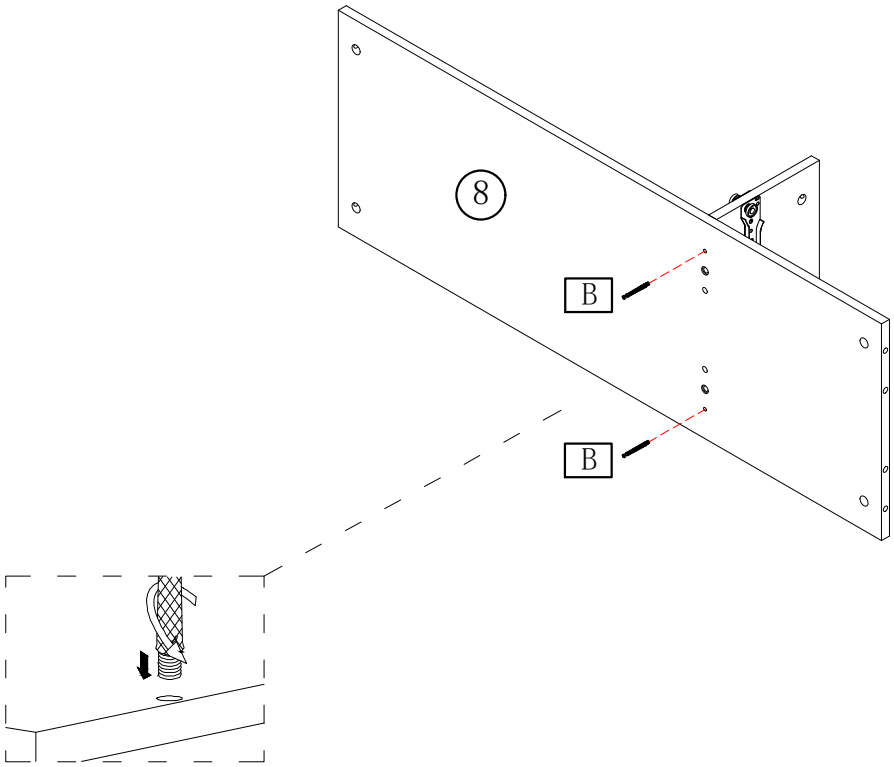

B KM6*40	*2

STEP 4

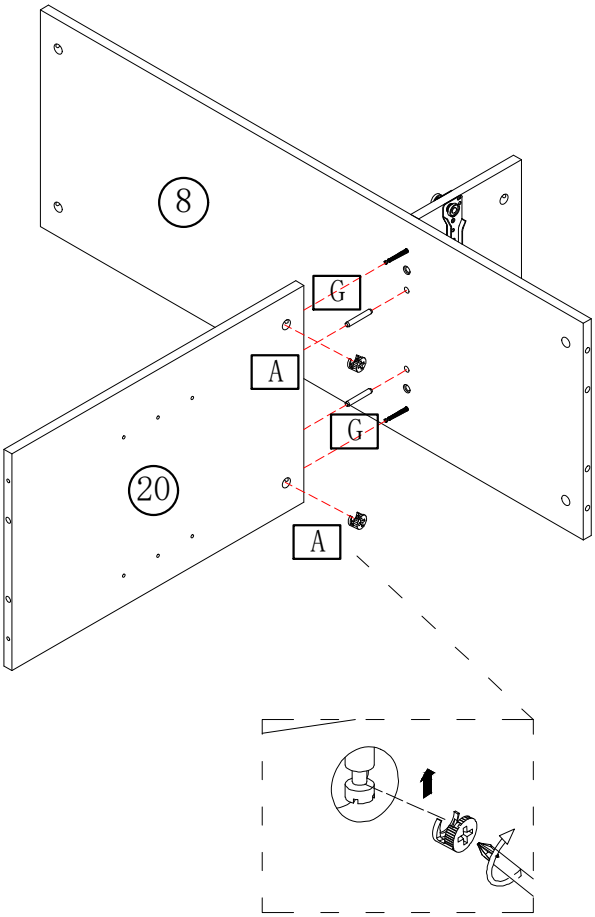

A M15*11	*2
G 8*50mm	*2

STEP 5

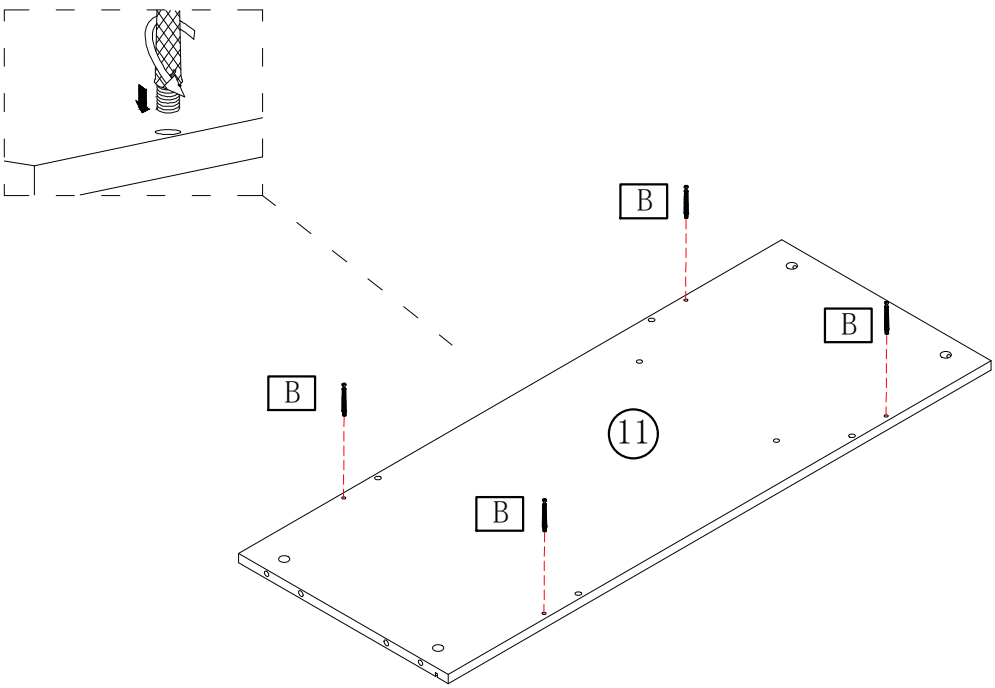

B	KM6*40 *4

STEP 6

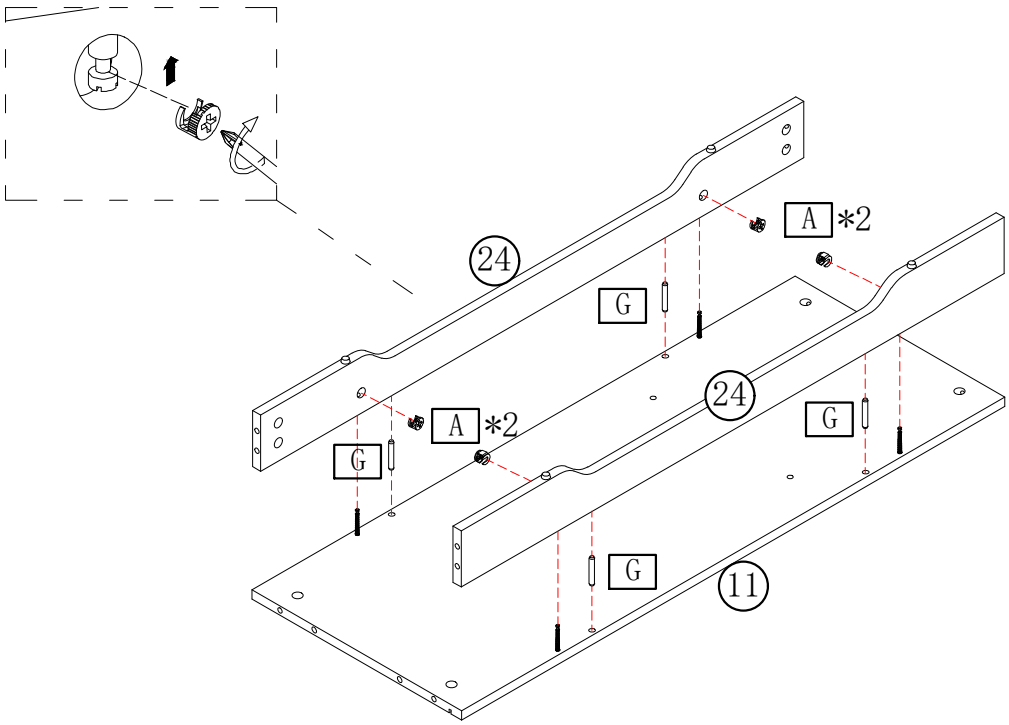

A	M15*11 *4	G	8*50mm *4

STEP 7

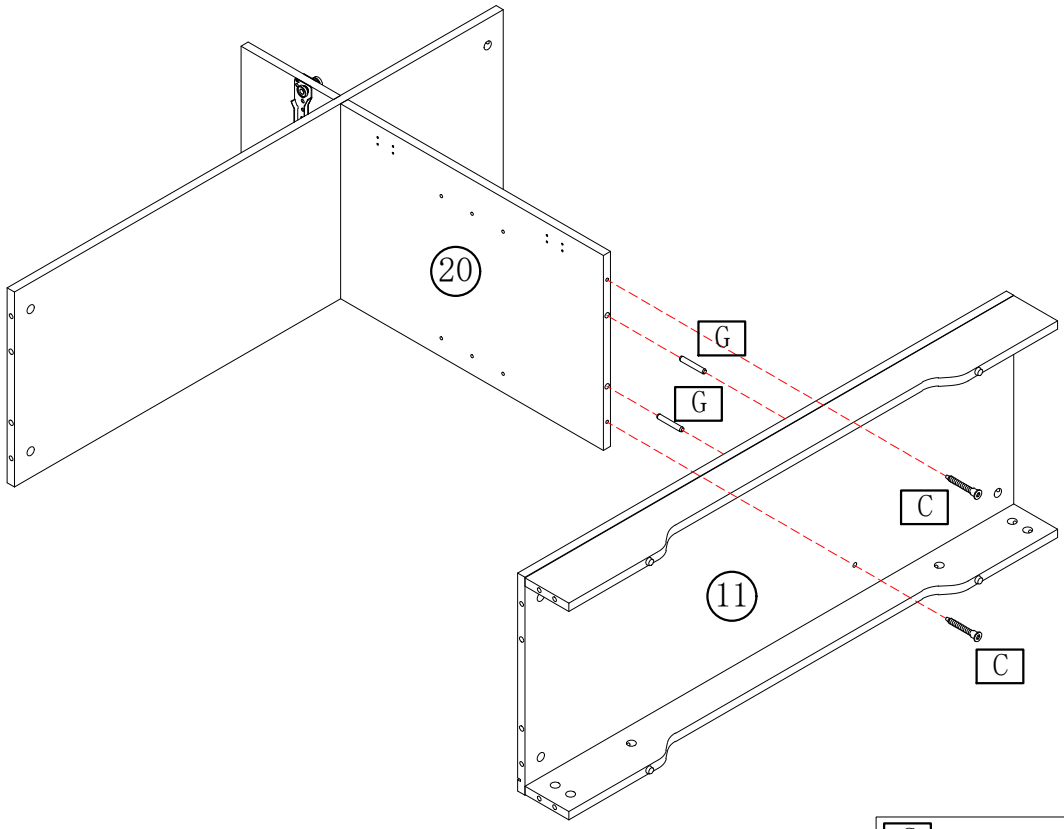

C M7*50 *2	G 8*50mm *2

STEP 8

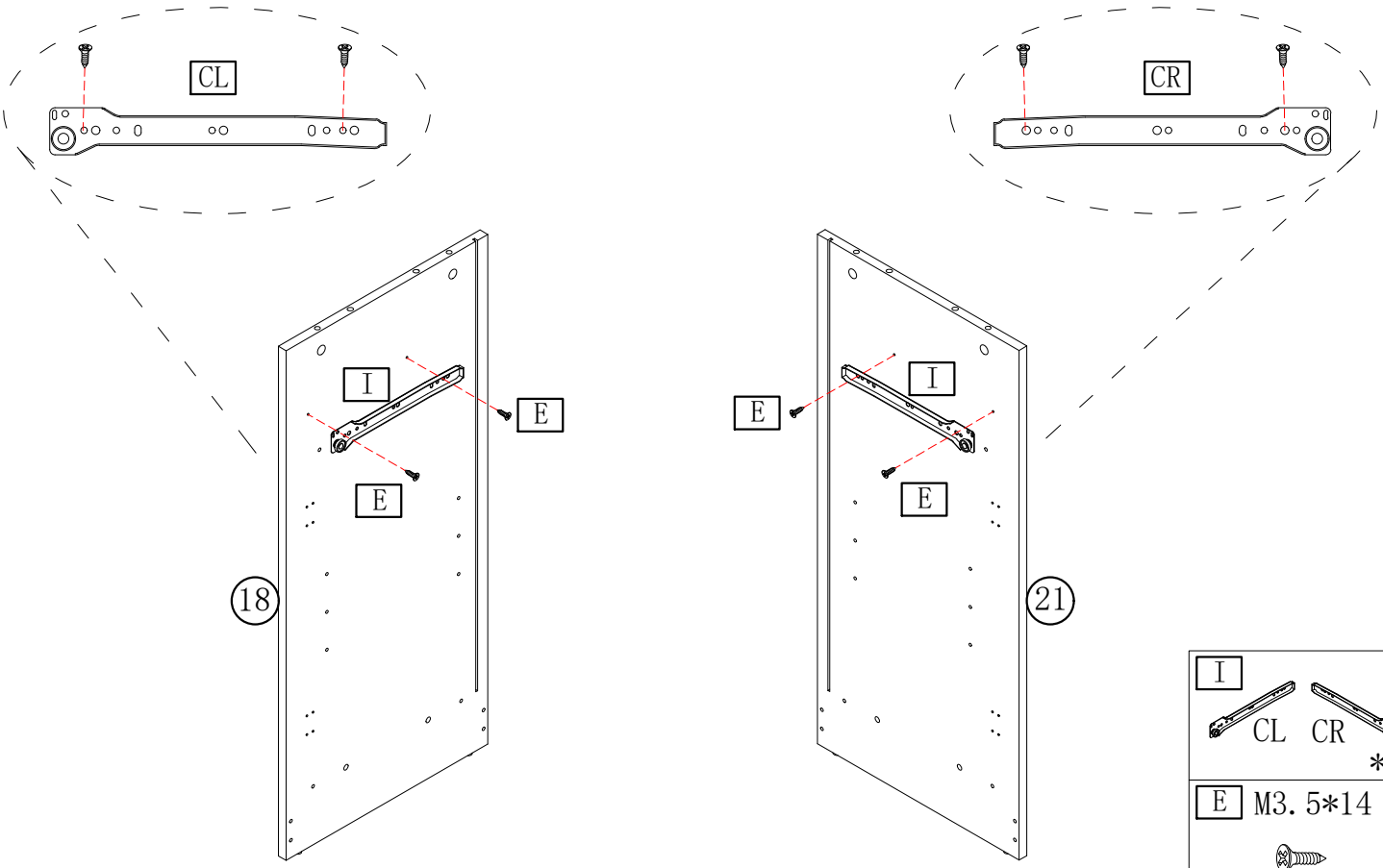

I CL CR *1
E M3.5*14 *4

STEP 9

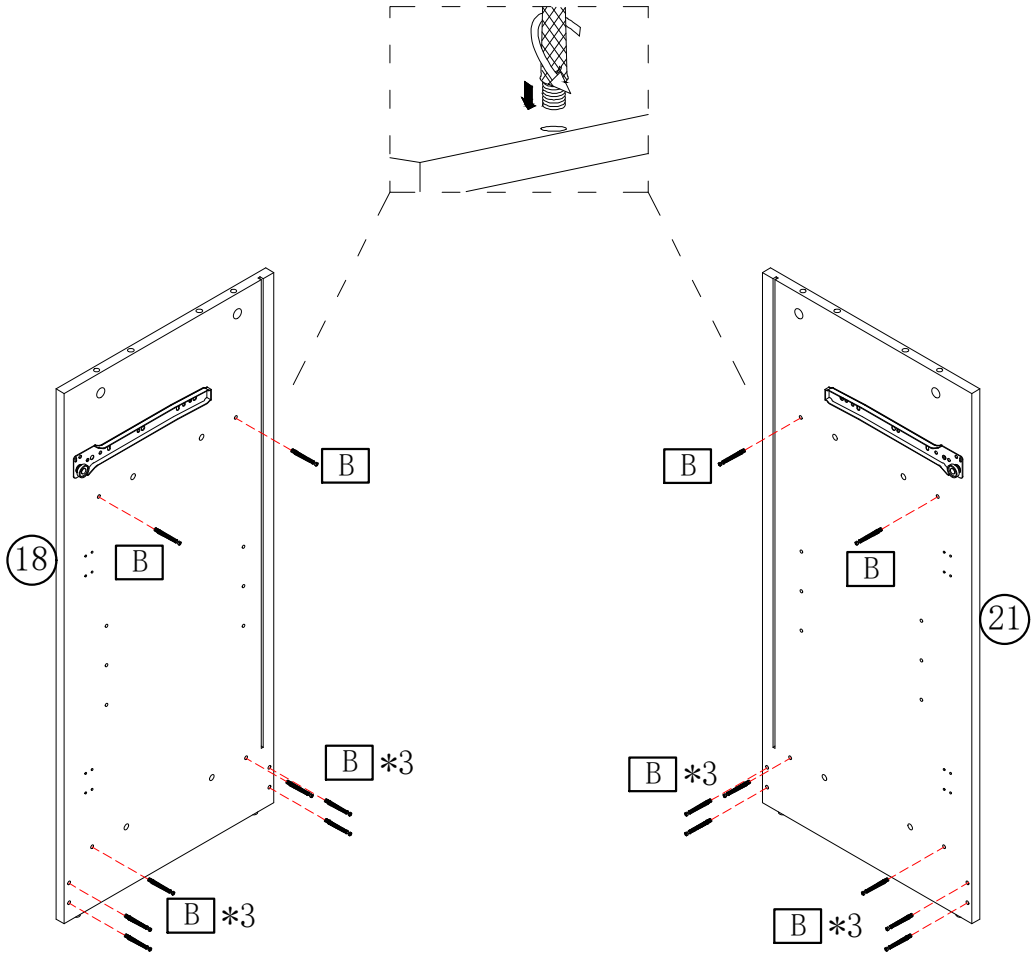

B	KM6*40
	*16

STEP 10

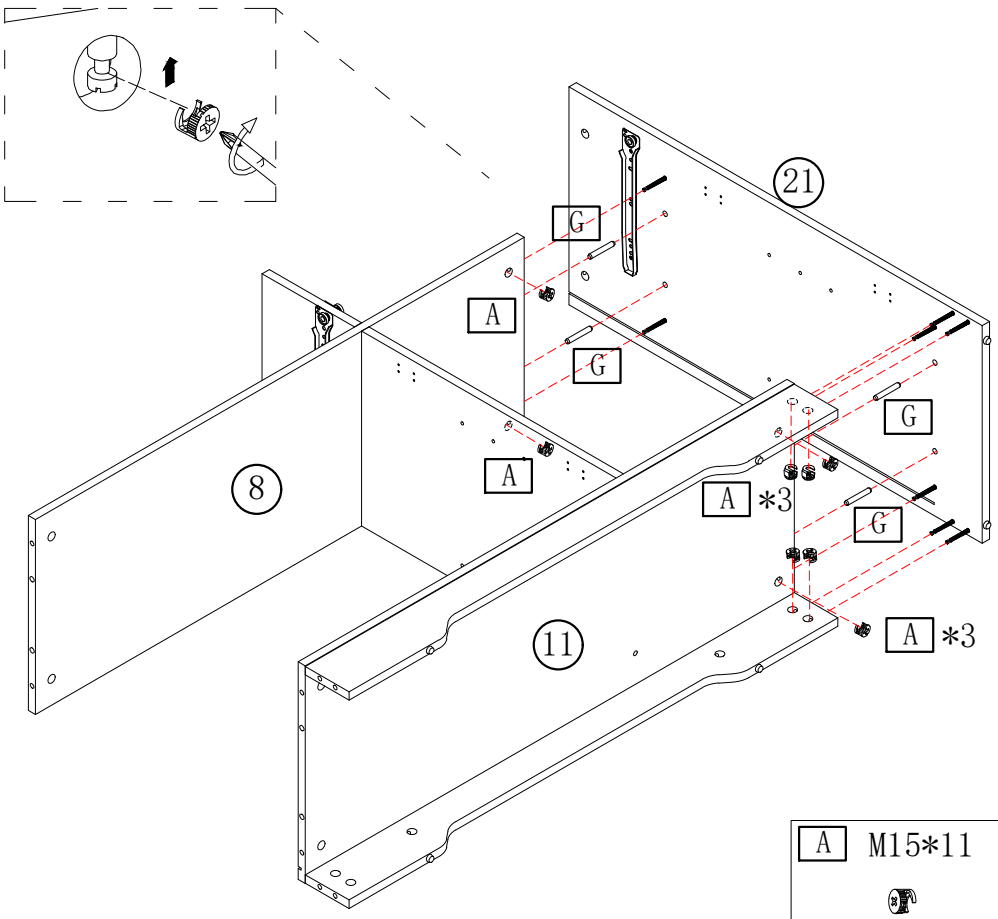

A	M15*11	G	8*50mm
	*8		*4

STEP 11

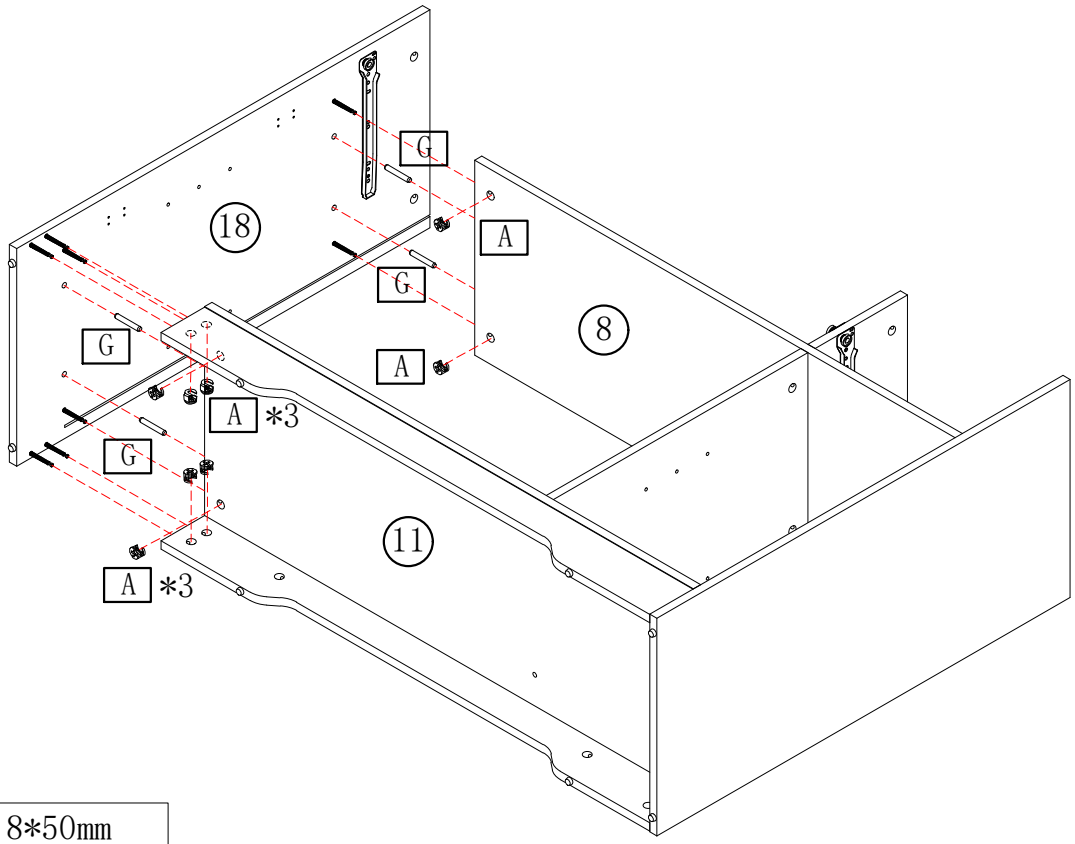

A M15*11 *8	G 8*50mm *4

STEP 12

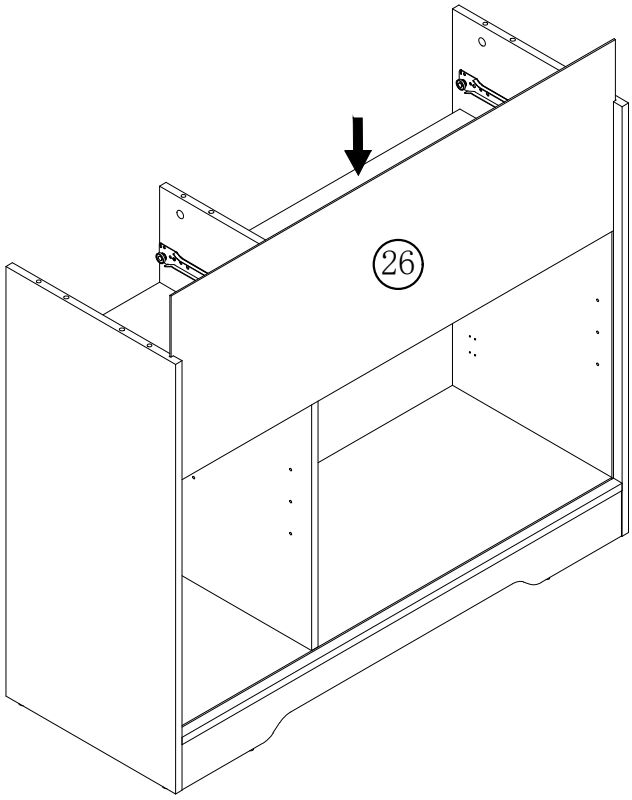

STEP 13

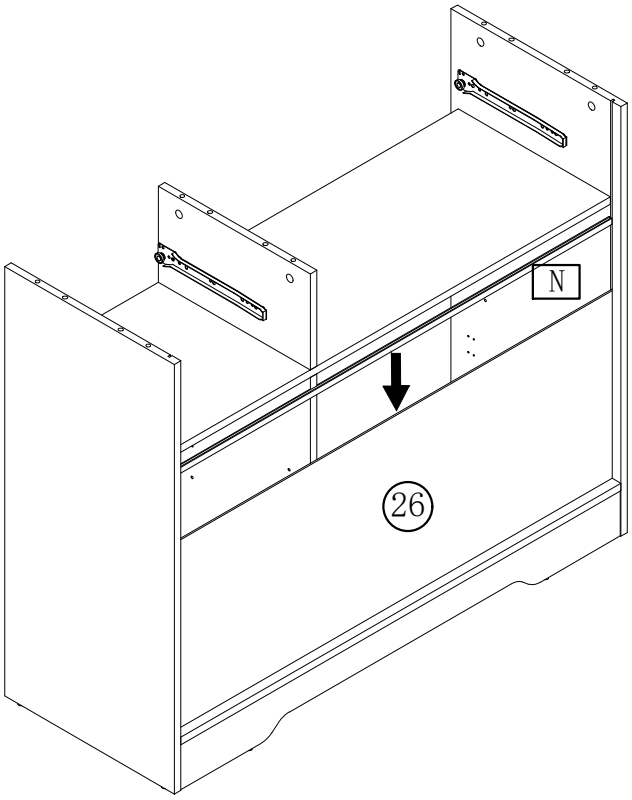

N 1014mm

*1

STEP 14

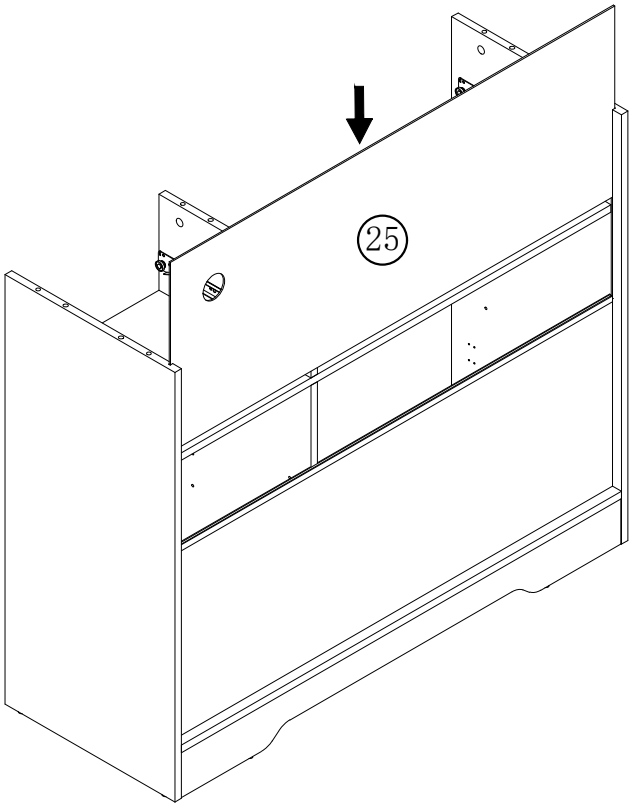

STEP 15

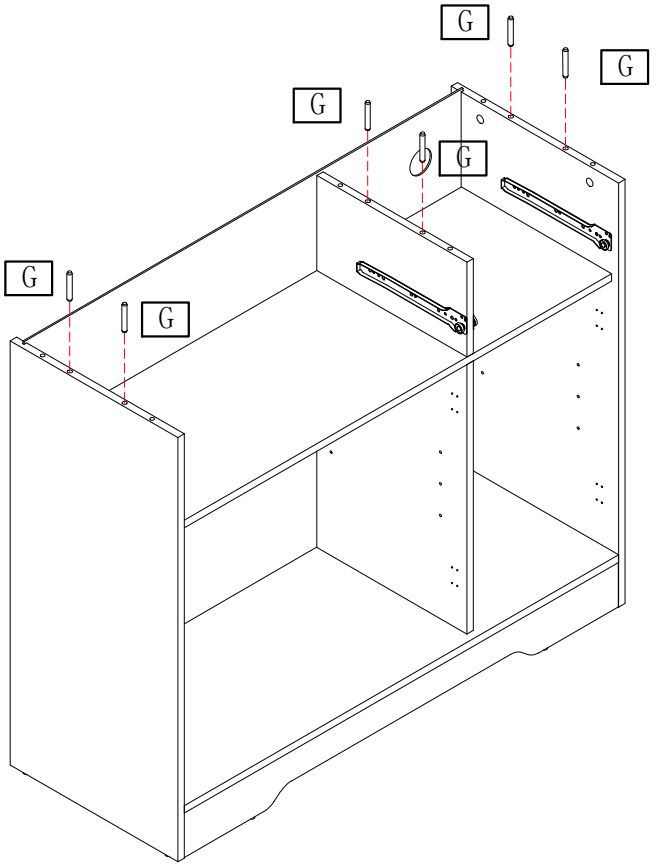

G 8*50mm

*6

STEP 16

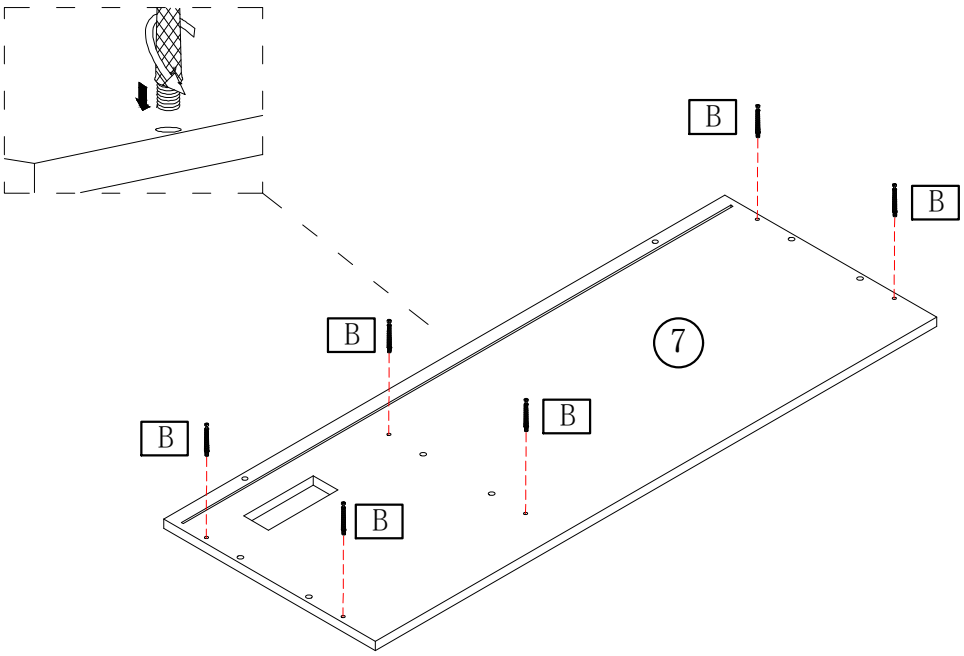

B KM6*40

*6

STEP 17

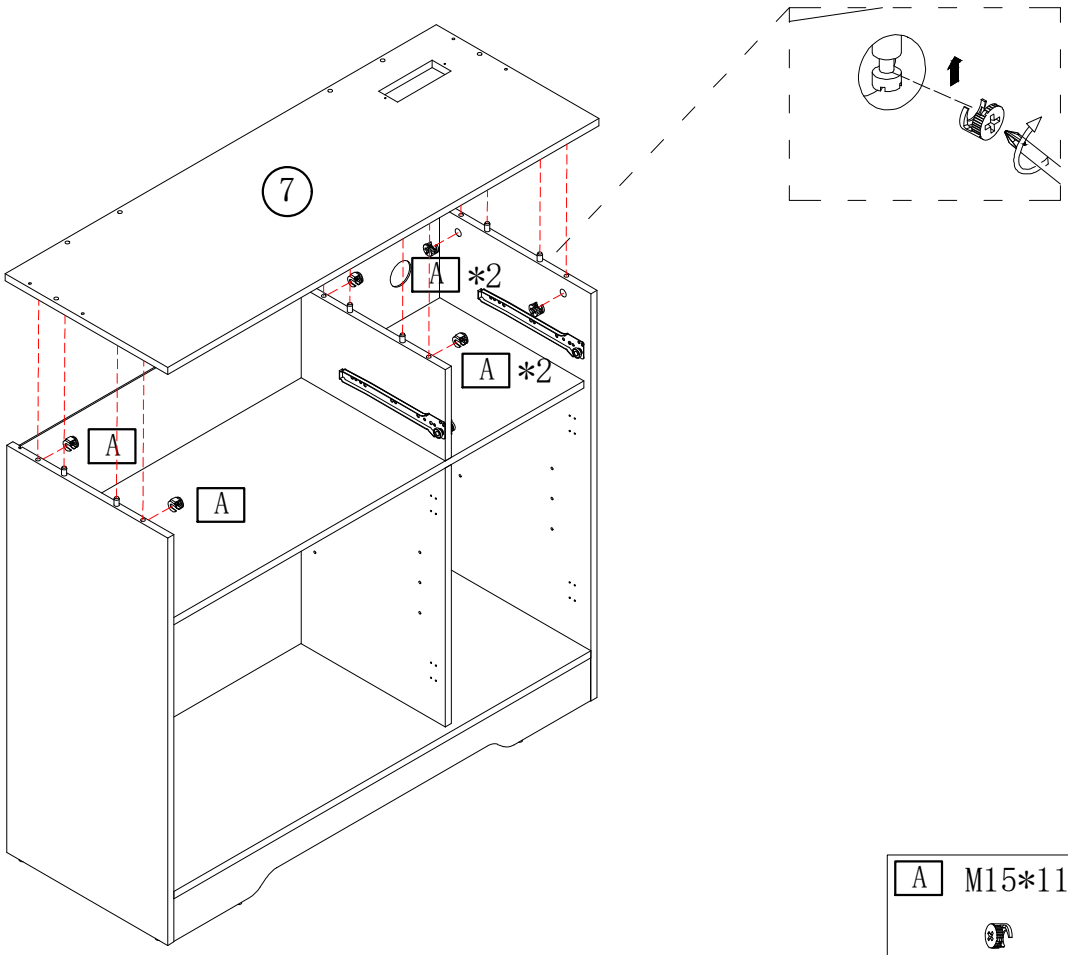

A M15*11	*6

STEP 18

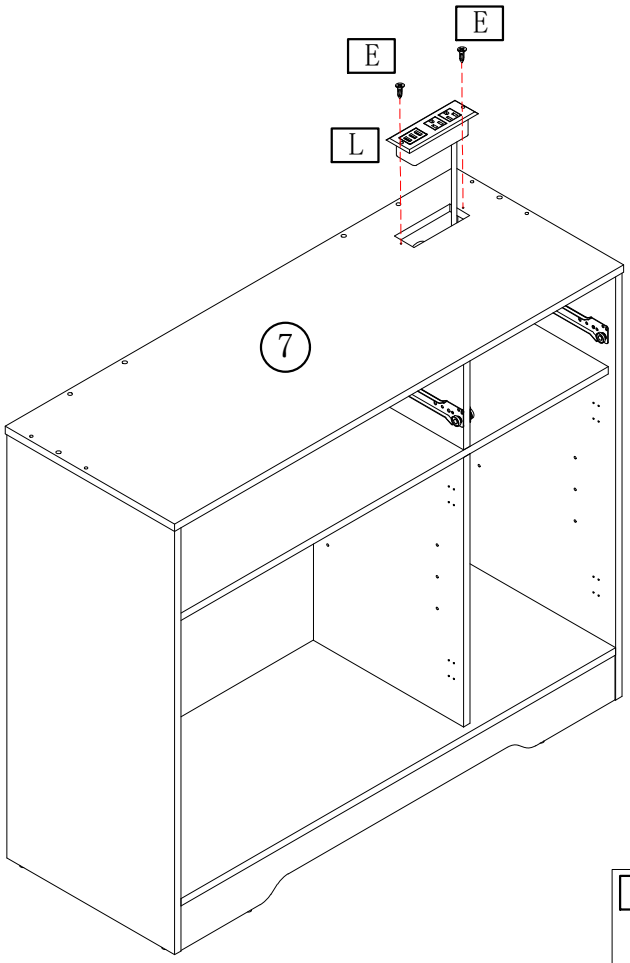

E M3.5*14	*2
L	*1

STEP 19

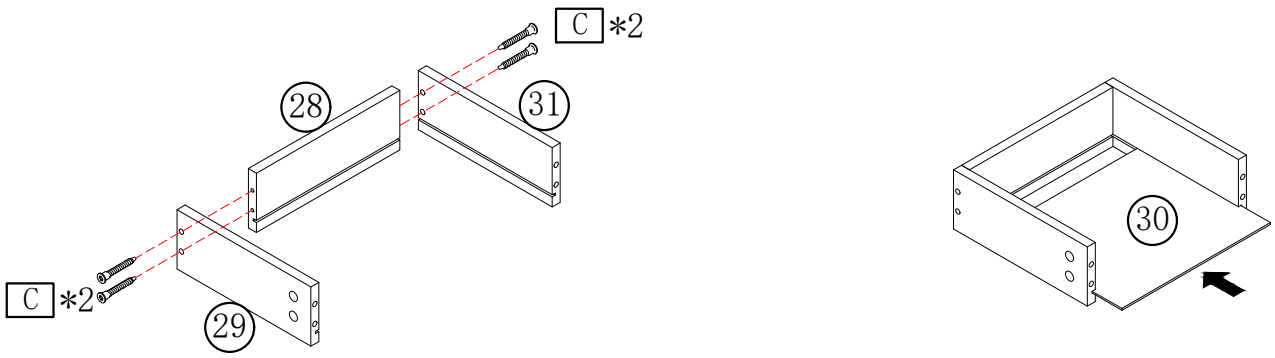

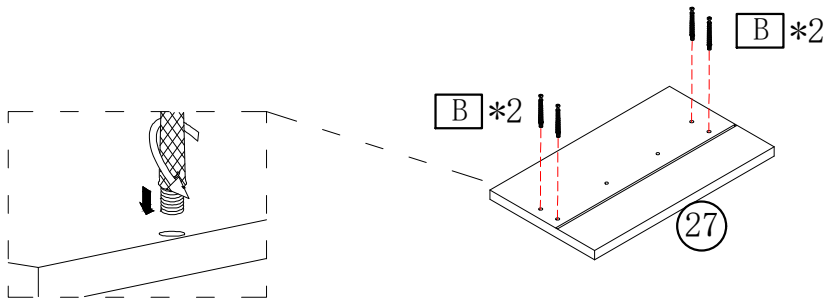

B KM6*40 *4	C M7*50 *4

STEP 20

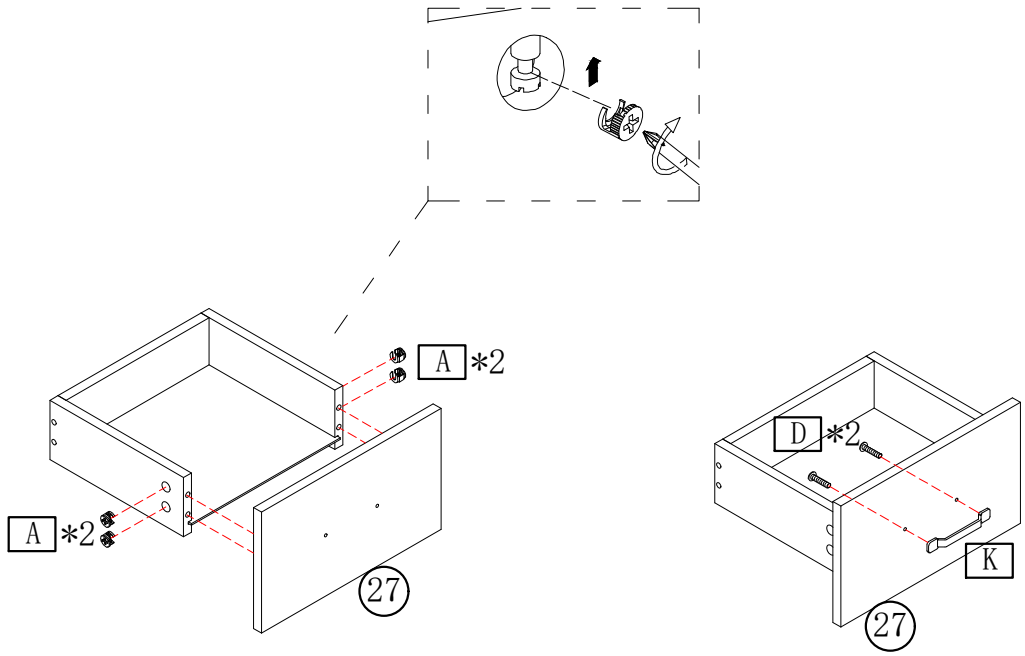

A M15*11 *4	D M4*18 *2	K *1

STEP 21

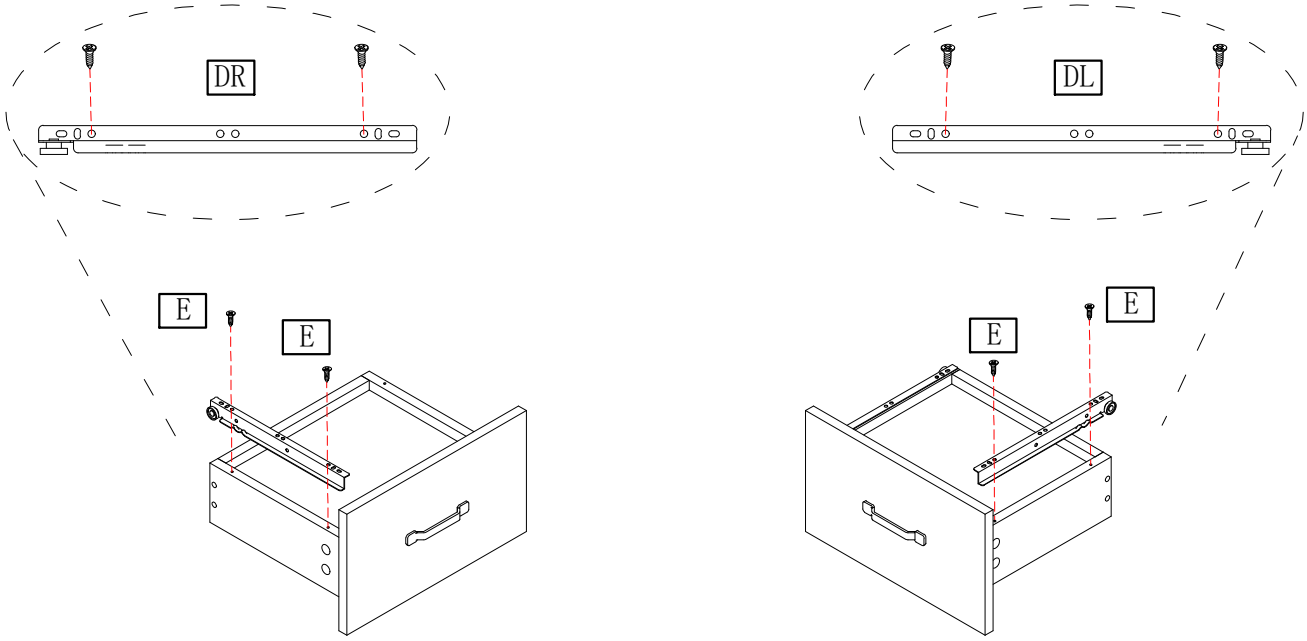

E M3.5*14 *4	I DL DR *1

STEP 22

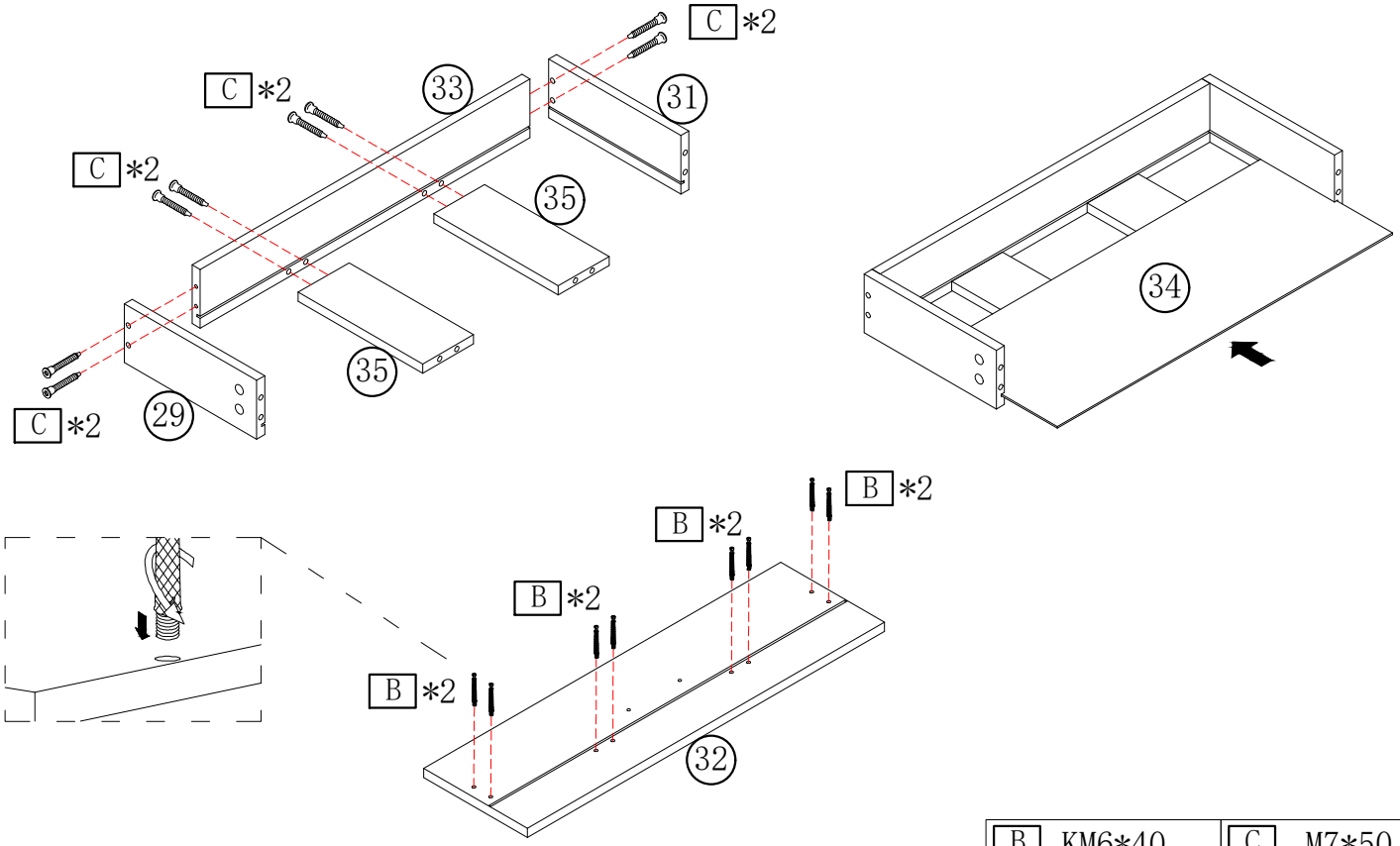

B KM6*40 *8	C M7*50 *8

STEP 23

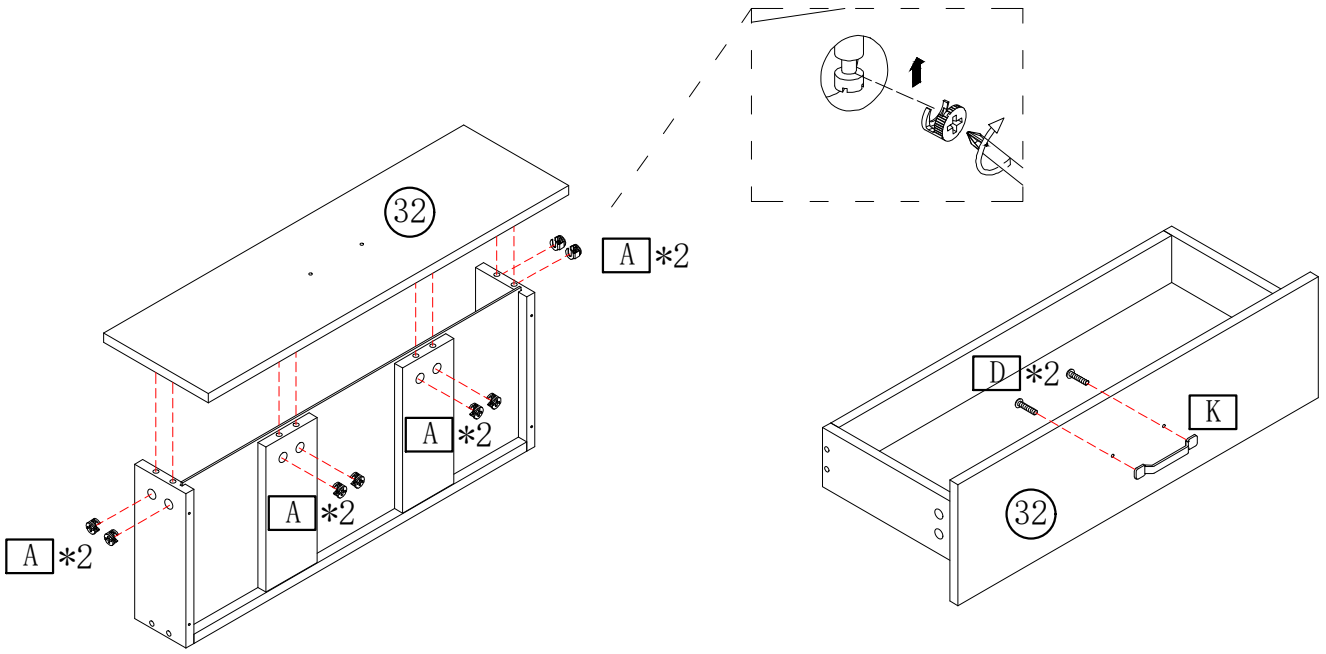

A	D	K
M15*11 *8	M4*18 *2	*1

STEP 24

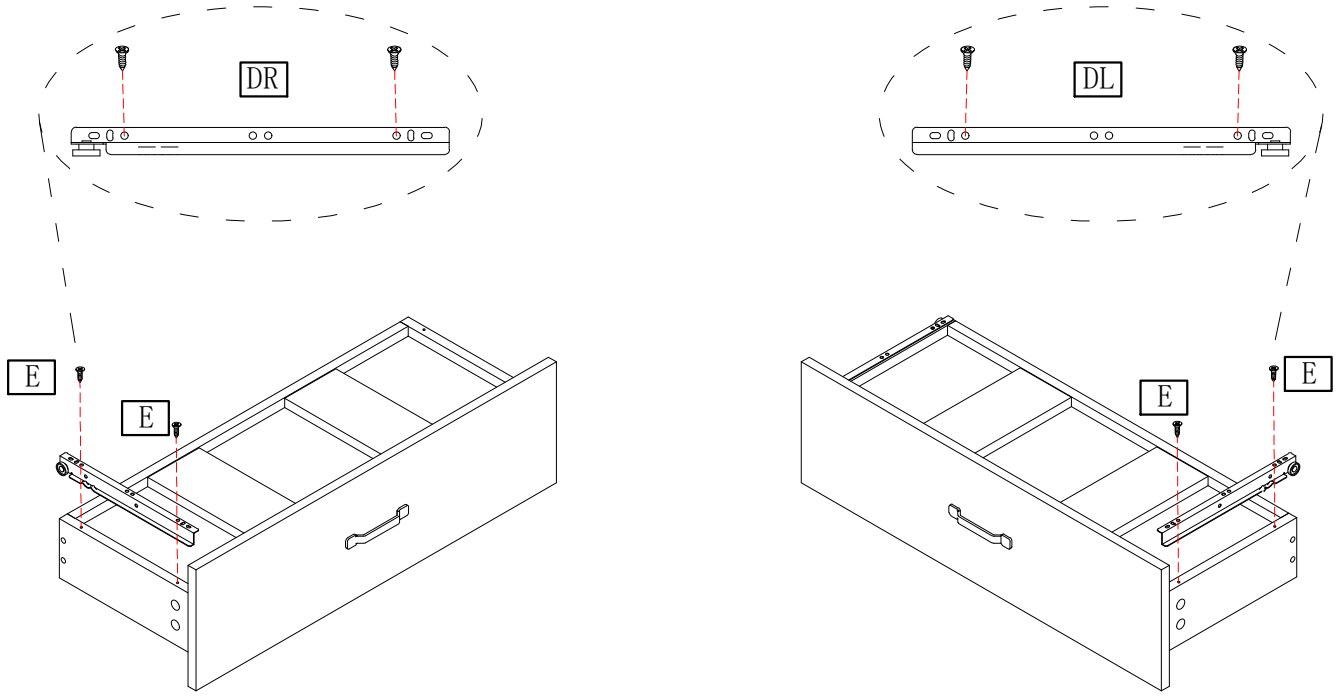

E	I
M3.5*14 *4	DL DR *1

STEP 25

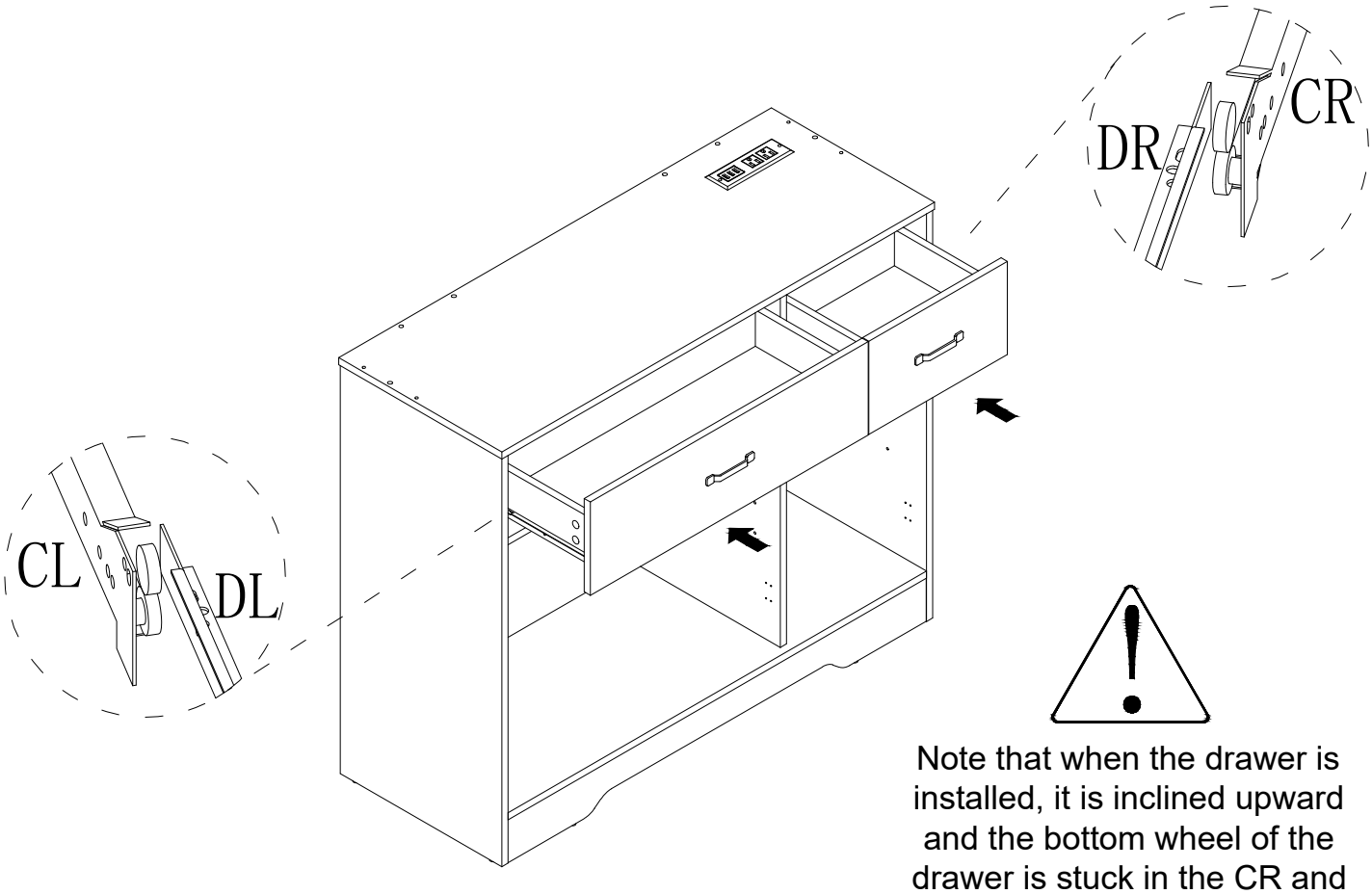

Note that when the drawer is installed, it is inclined upward and the bottom wheel of the drawer is stuck in the CR and CL rail grooves.

STEP 26

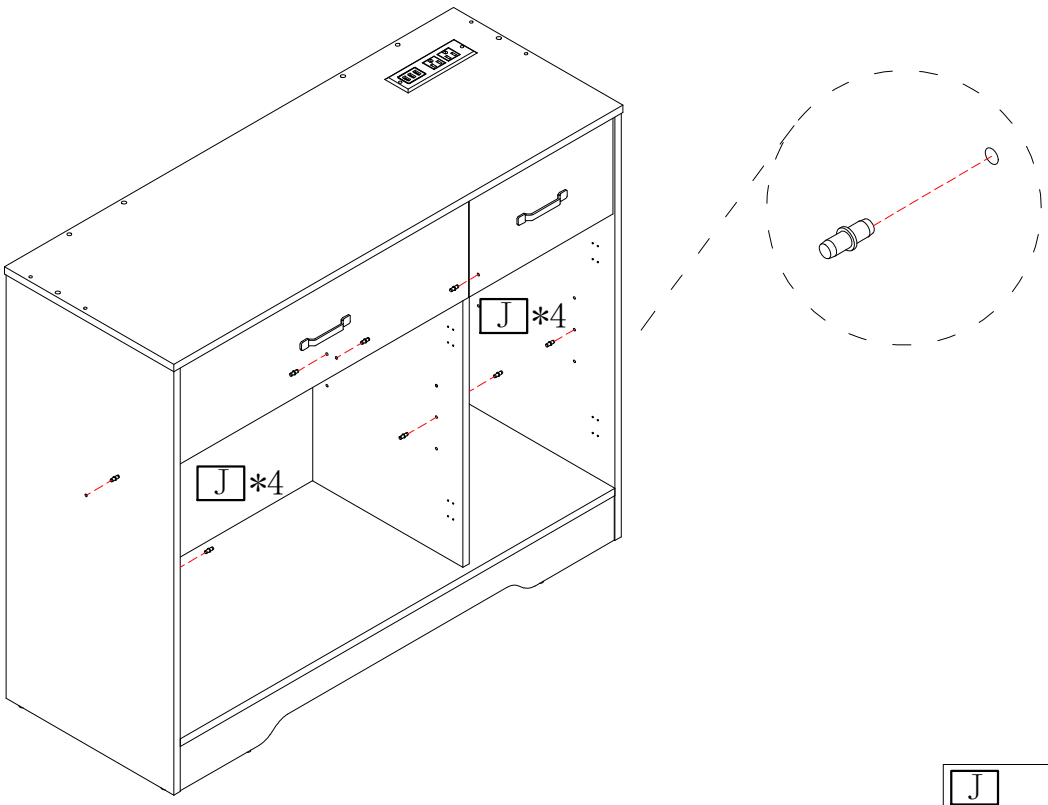

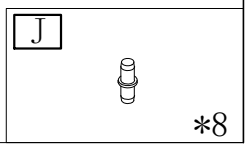

STEP 27

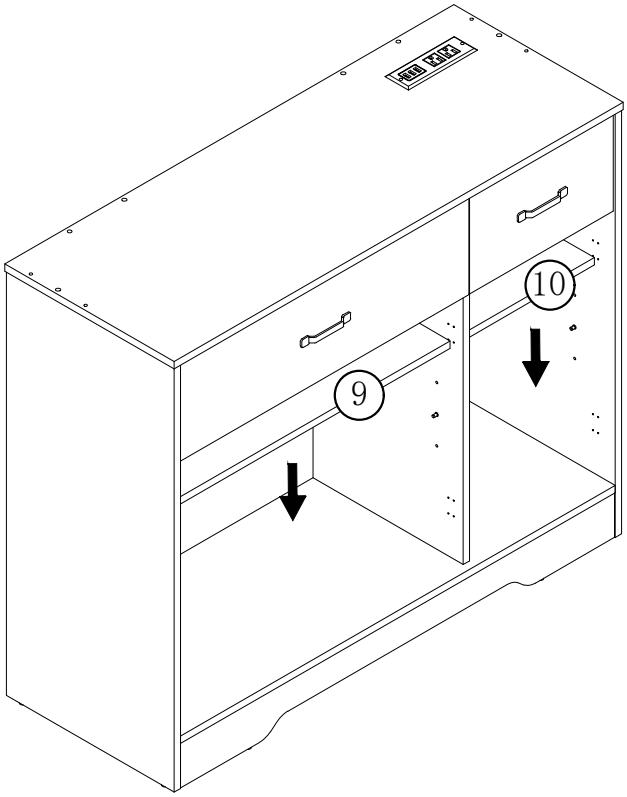

STEP 28

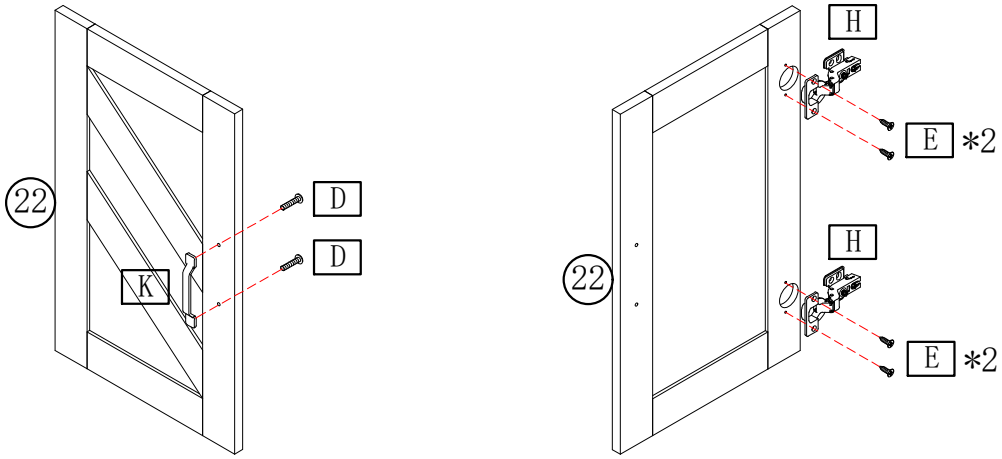

D M4*18 *2	E M3.5*14 *4	H *2	K *1

STEP 29

X2

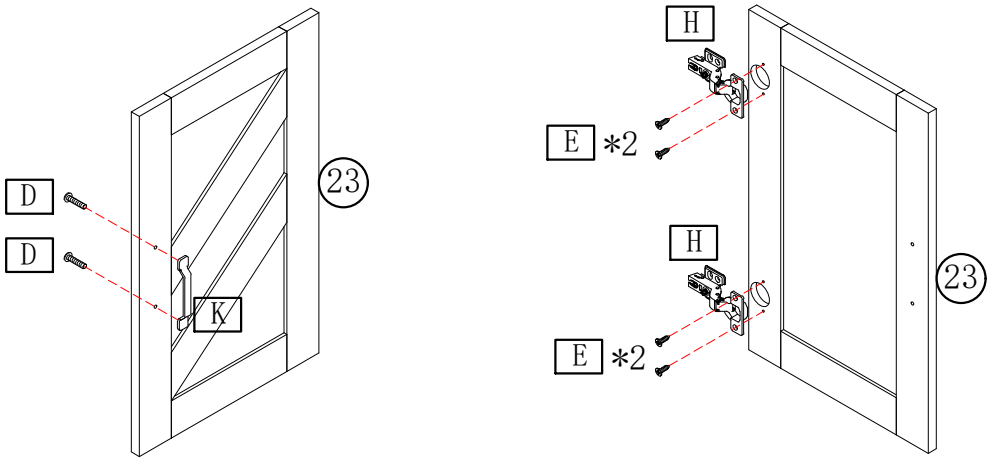

D M4*18 *4	E M3.5*14 *8	H *4	K *2

STEP 30

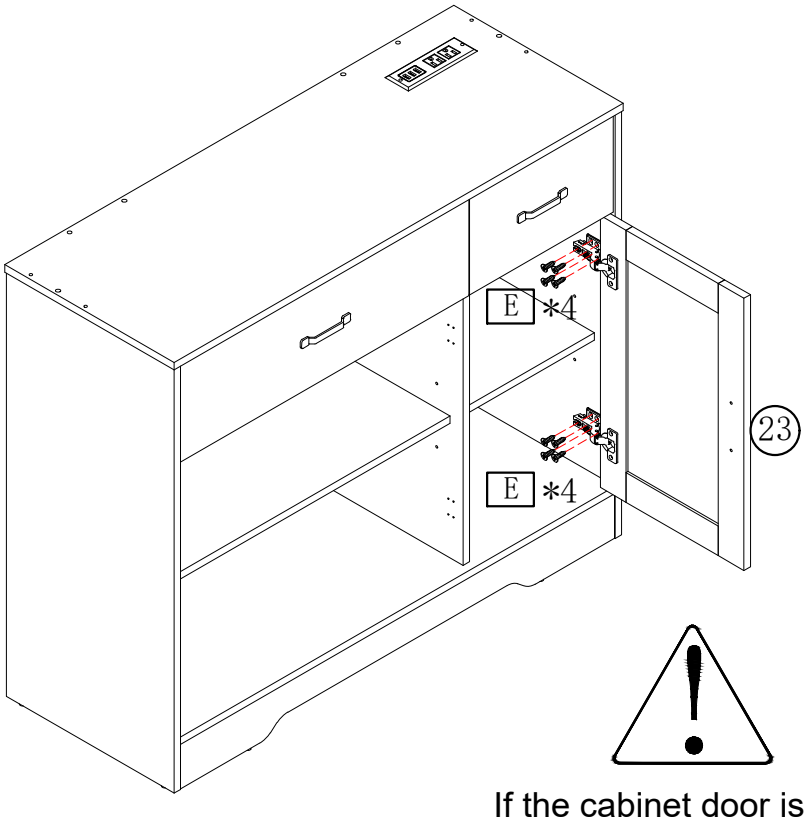

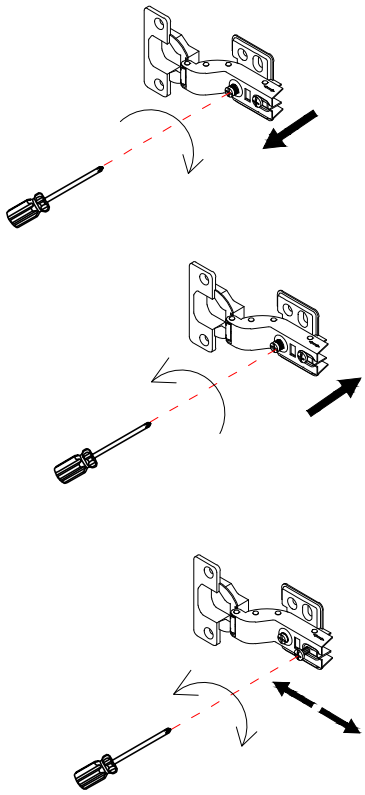

If the cabinet door is out of balance, you can adjust the hinge

E M3.5*14 *8

STEP 31

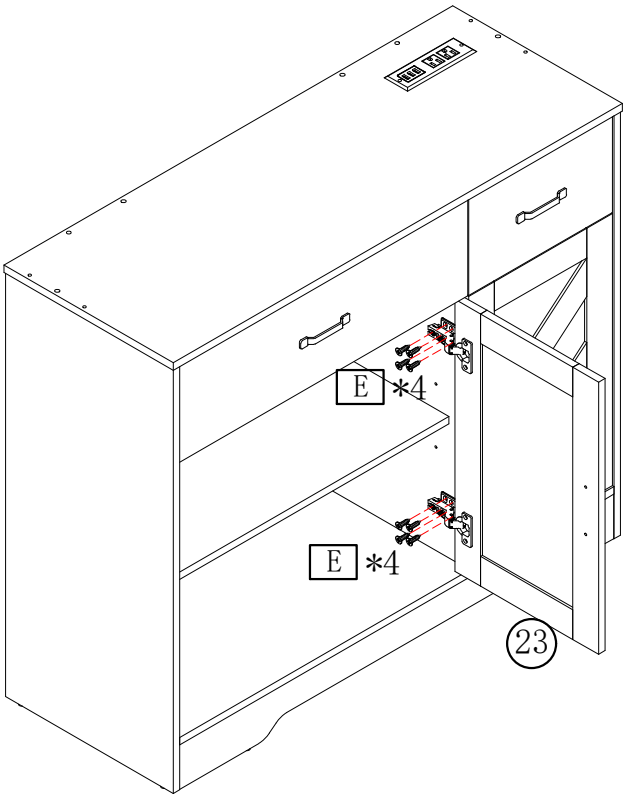

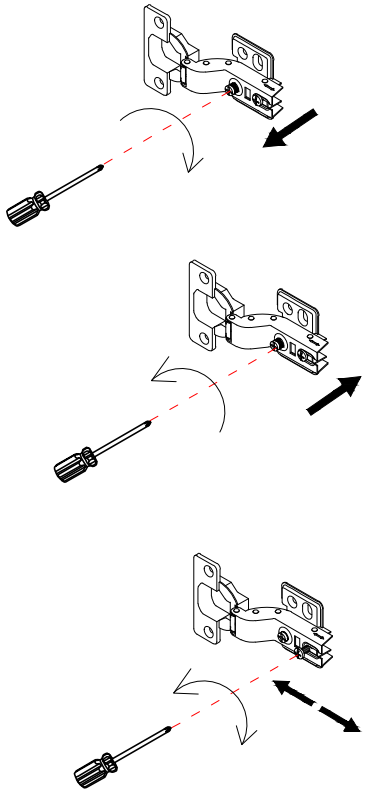

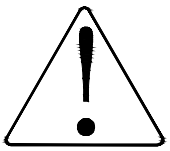

If the cabinet door is out of balance, you can adjust the hinge

E M3.5*14

*8

STEP 32

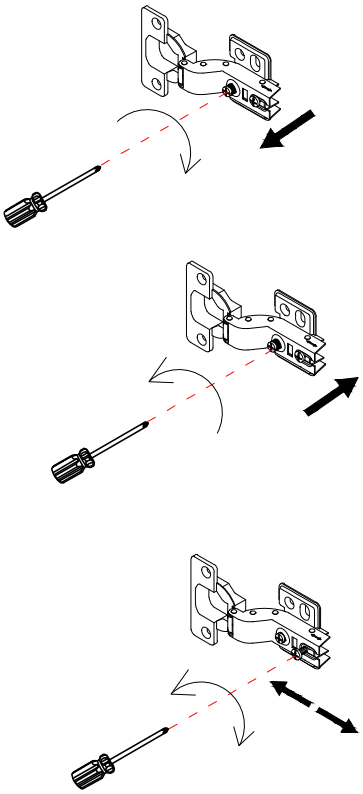

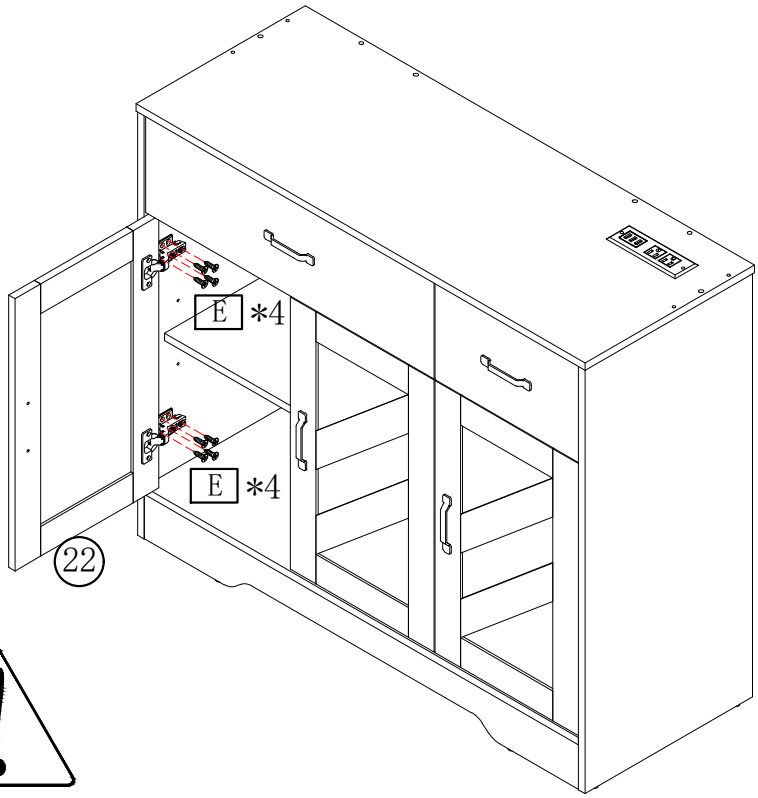

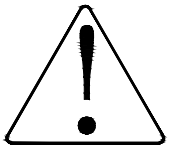

If the cabinet door is out of balance, you can adjust the hinge

E M3.5*14

*8

STEP 33

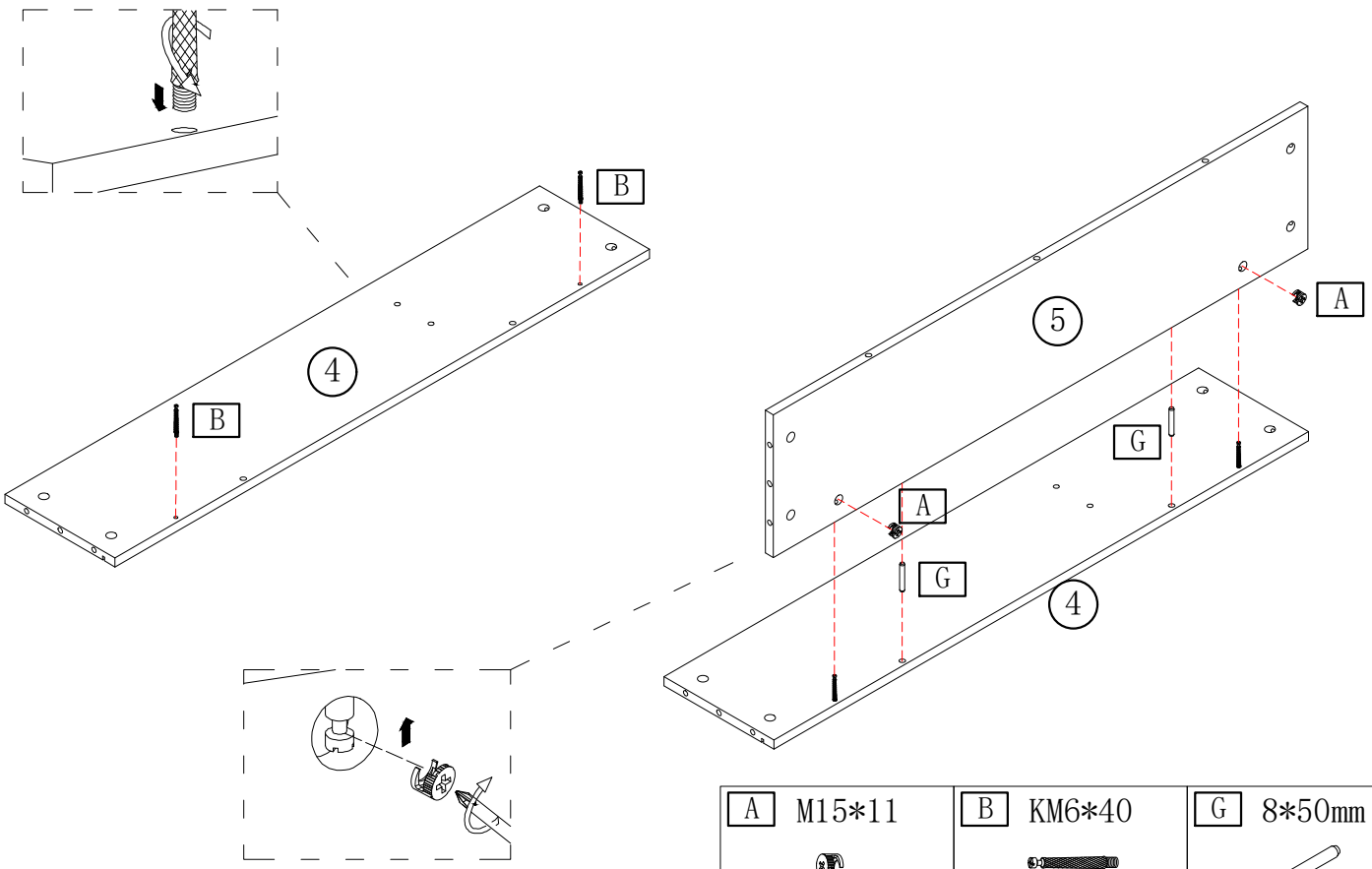

A	B	G
M15*11 *2	KM6*40 *2	8*50mm *2

STEP 34

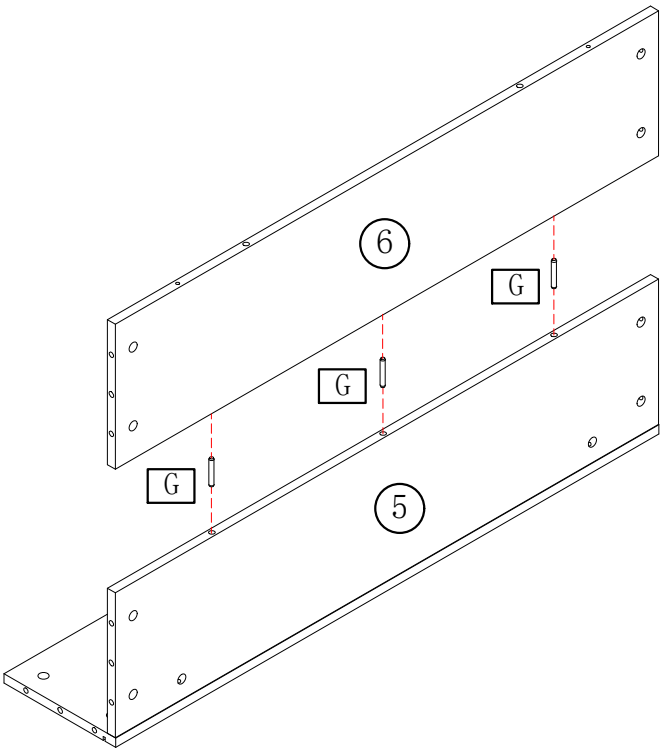

G
8*50mm *3

STEP 35

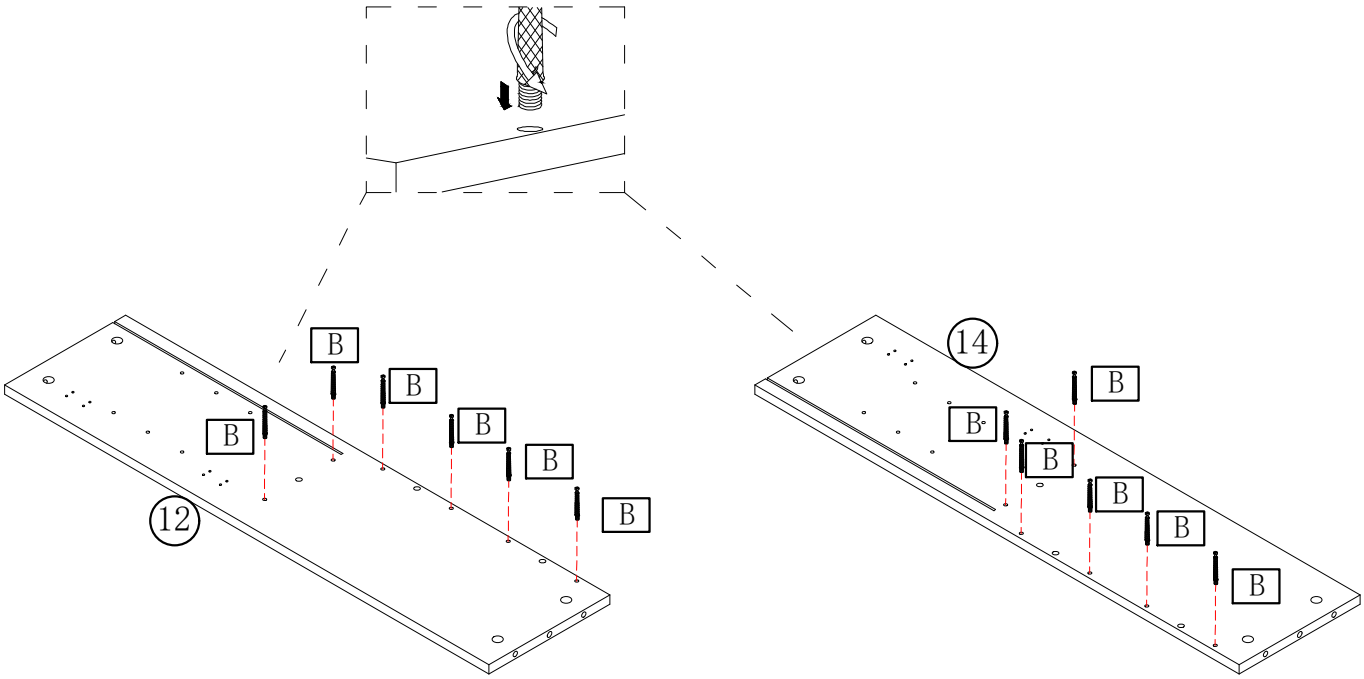

B KM6*40	*12

STEP 36

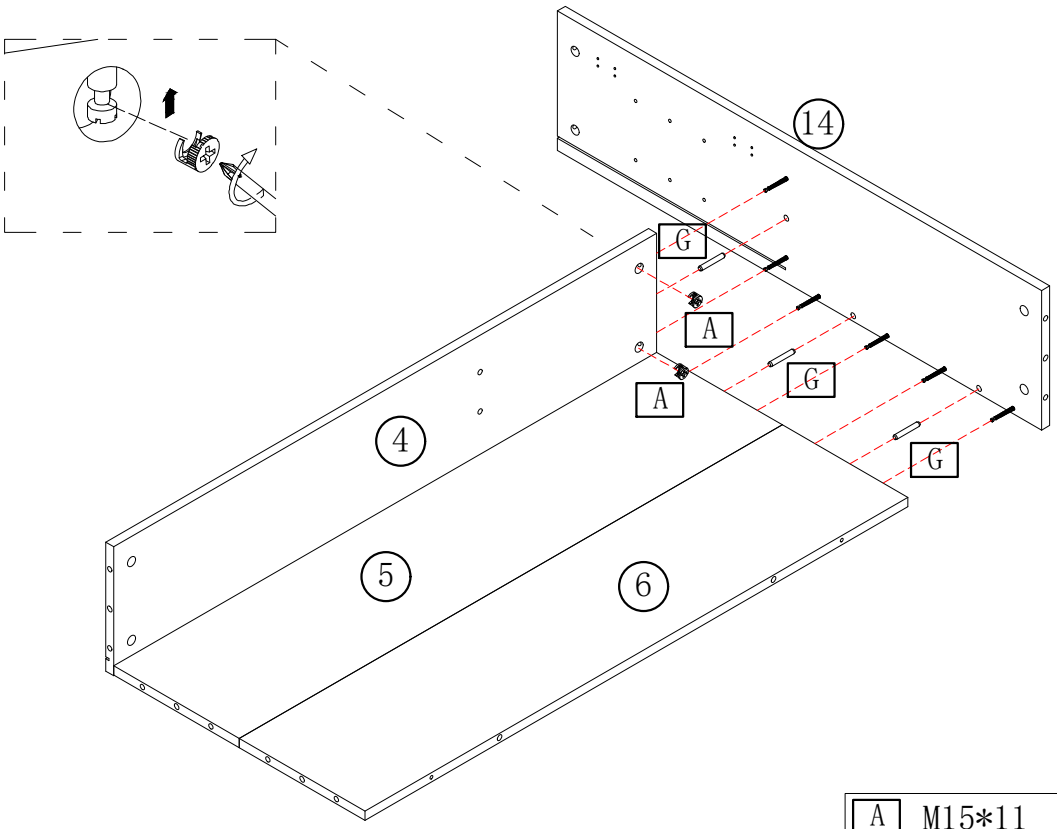

A M15*11	G 8*50mm
*2	*3

STEP 37

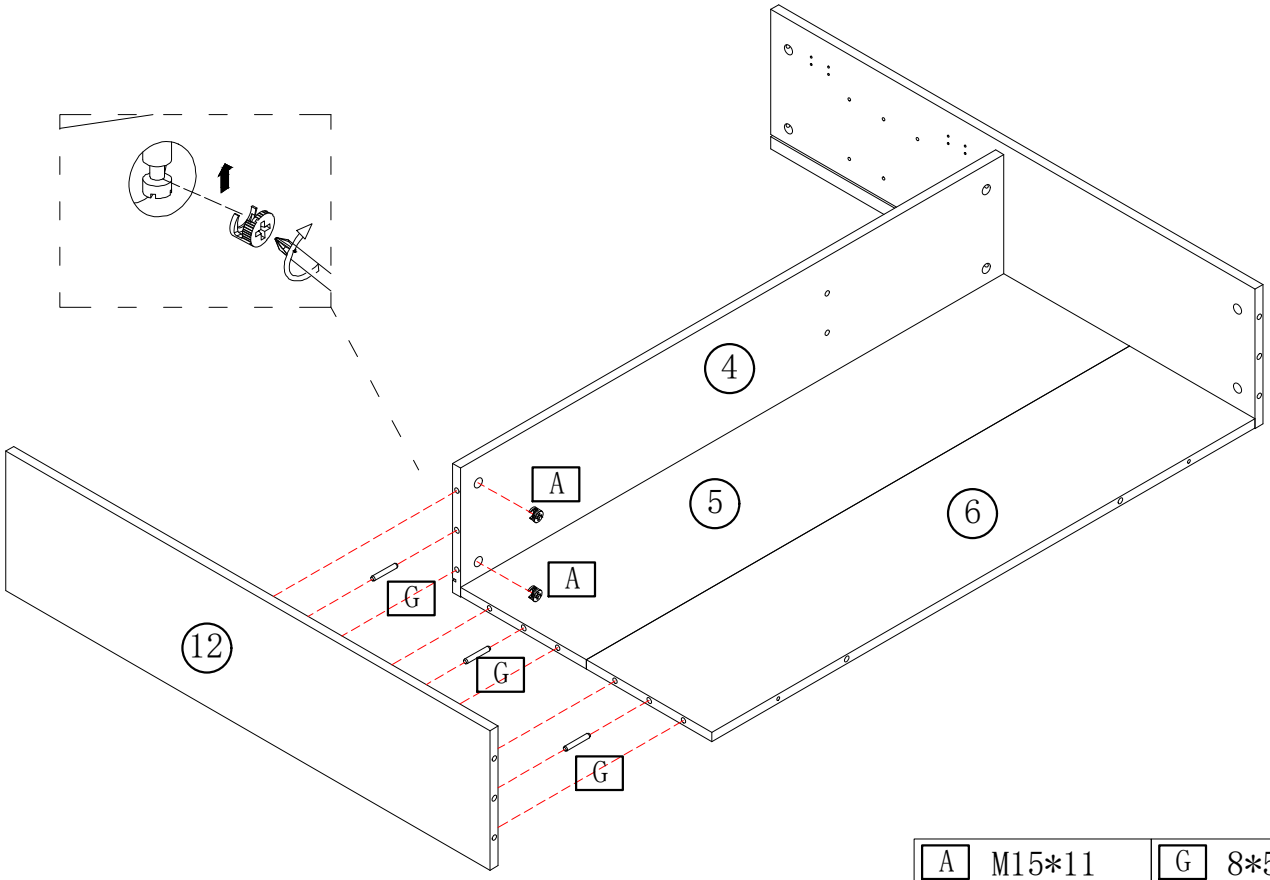

A M15*11 *2	G 8*50mm *3

STEP 38

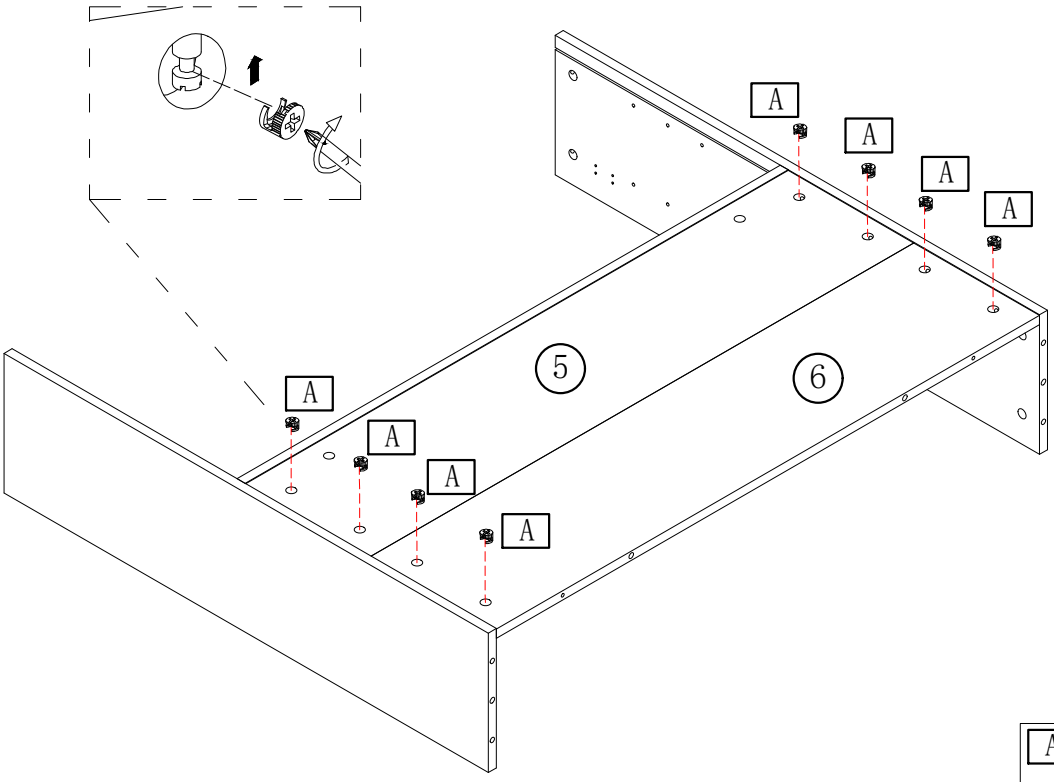

A M15*11 *8

STEP 39

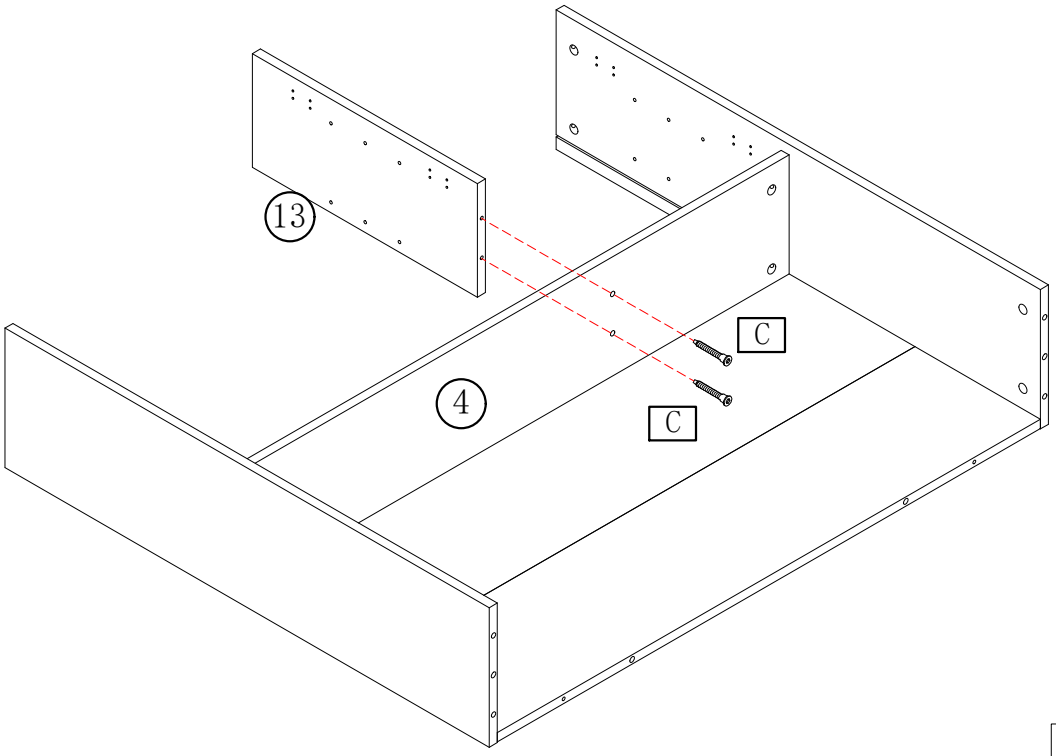

C M7*50

*2

STEP 40

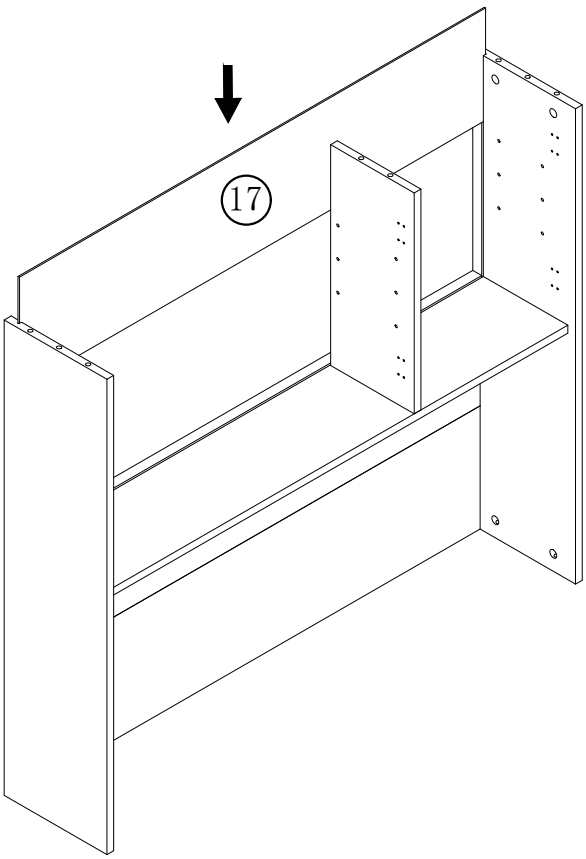

STEP 41

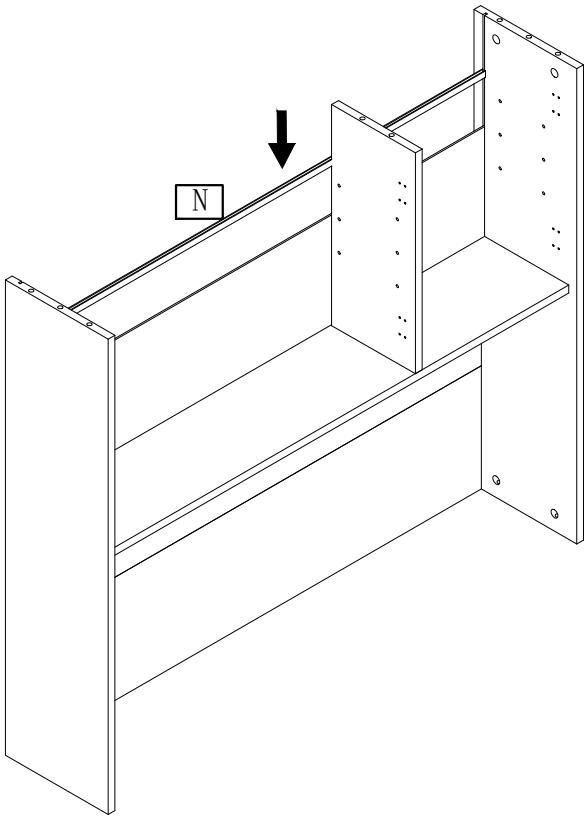

N 1014mm

*1

STEP 42

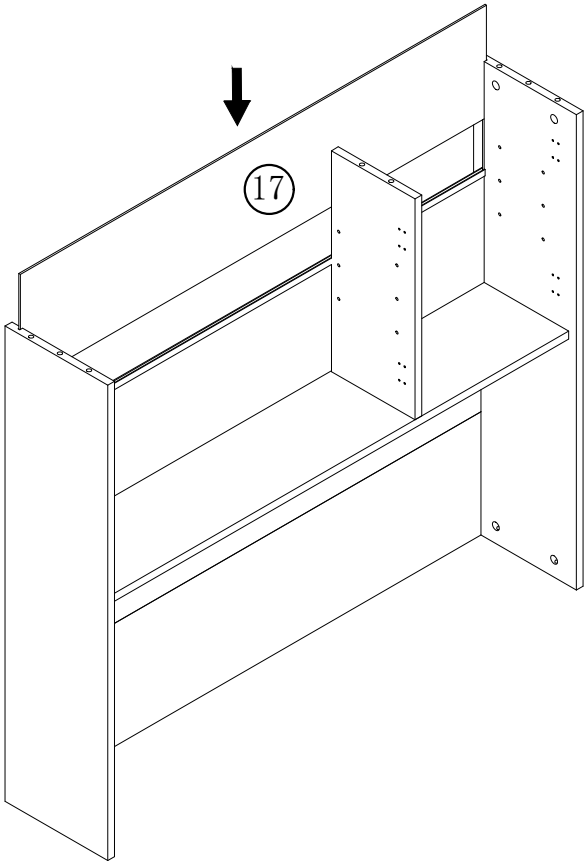

STEP 43

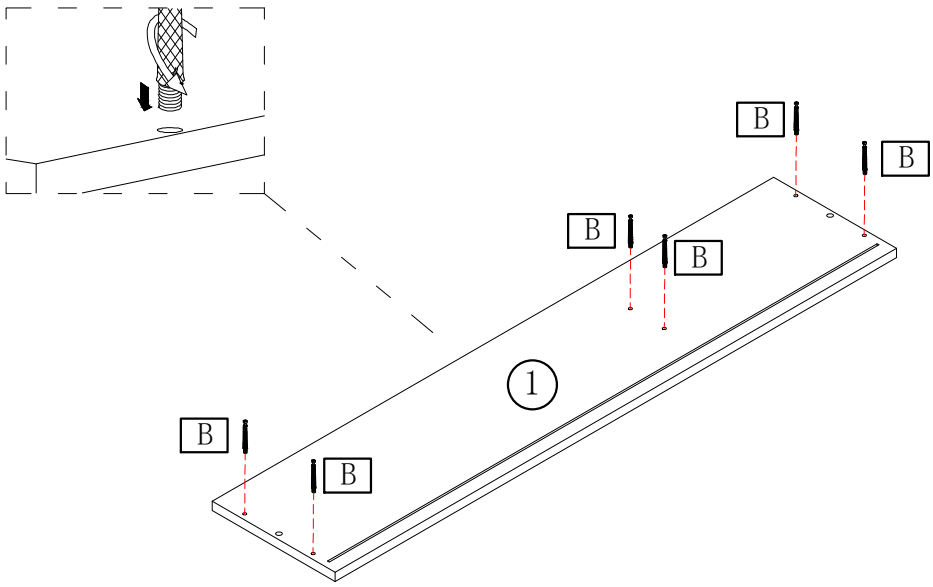

B	KM6*40 *6

STEP 44

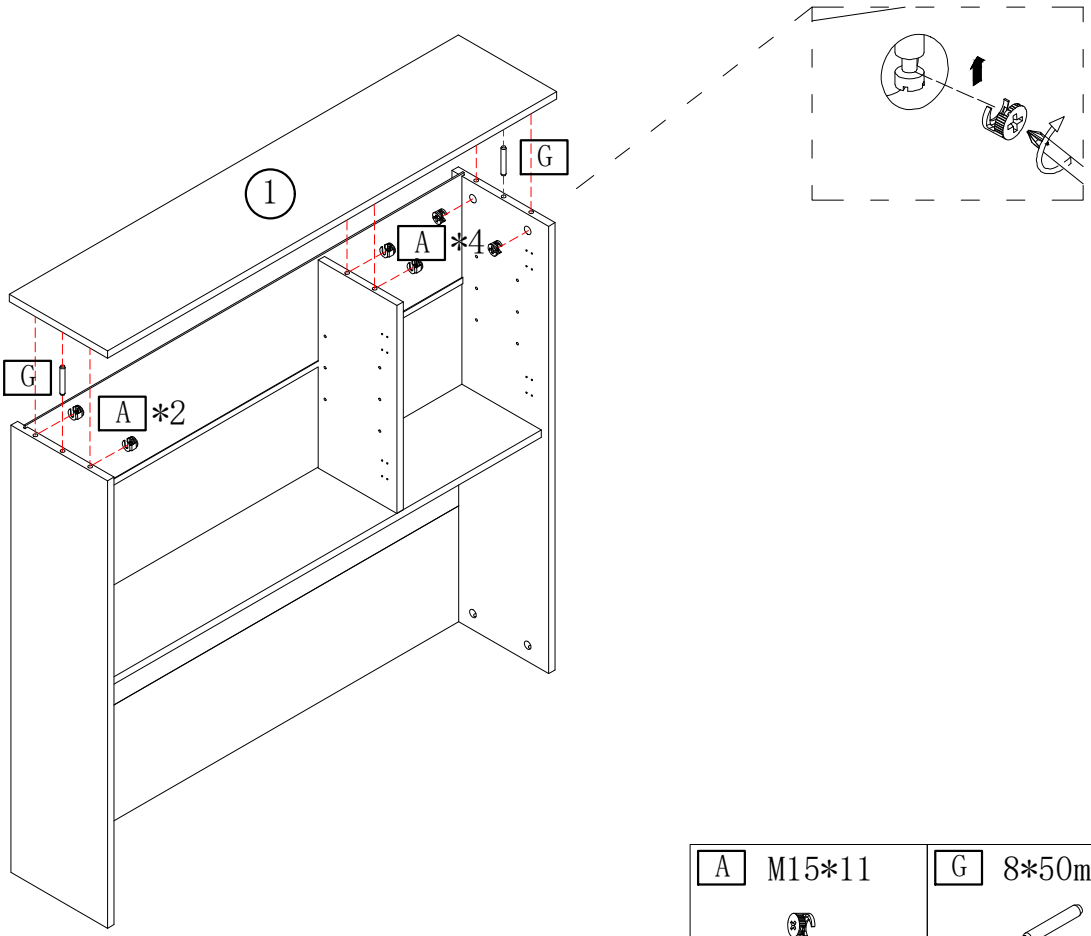

A	M15*11 *6	G	8*50mm *2

STEP 45

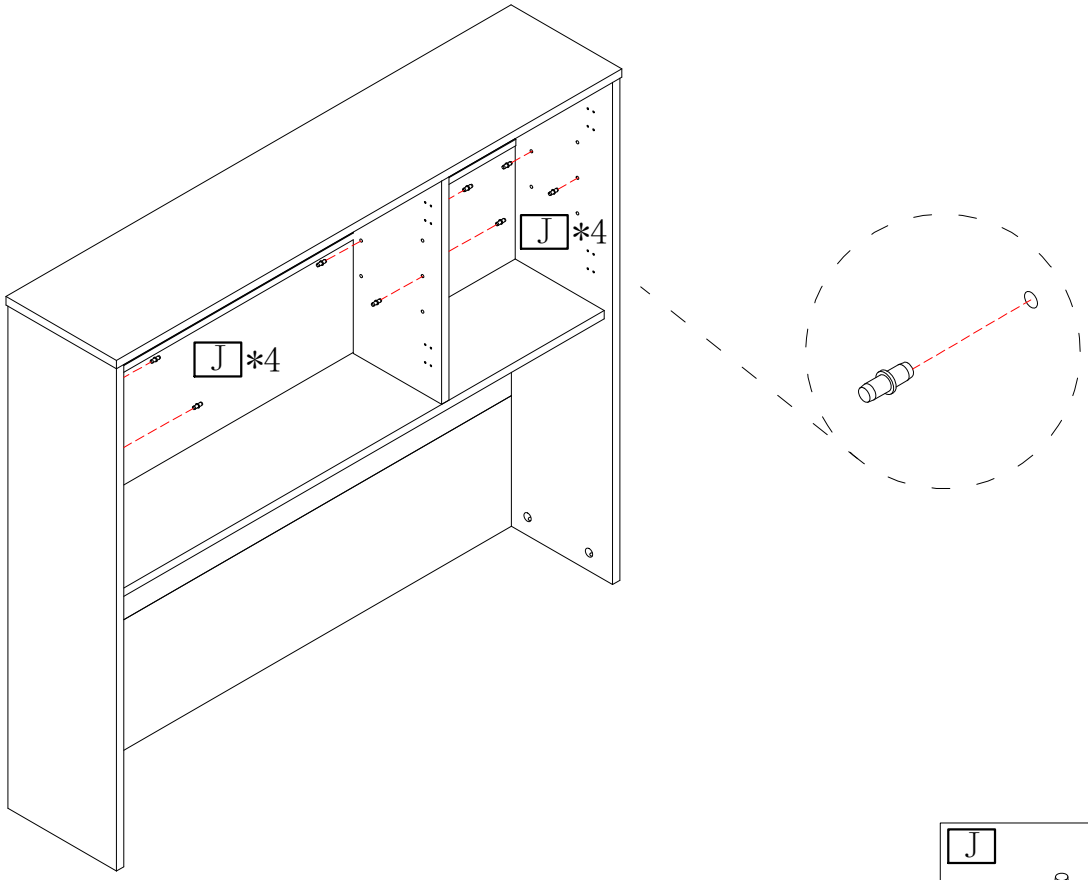

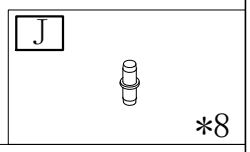

STEP 46

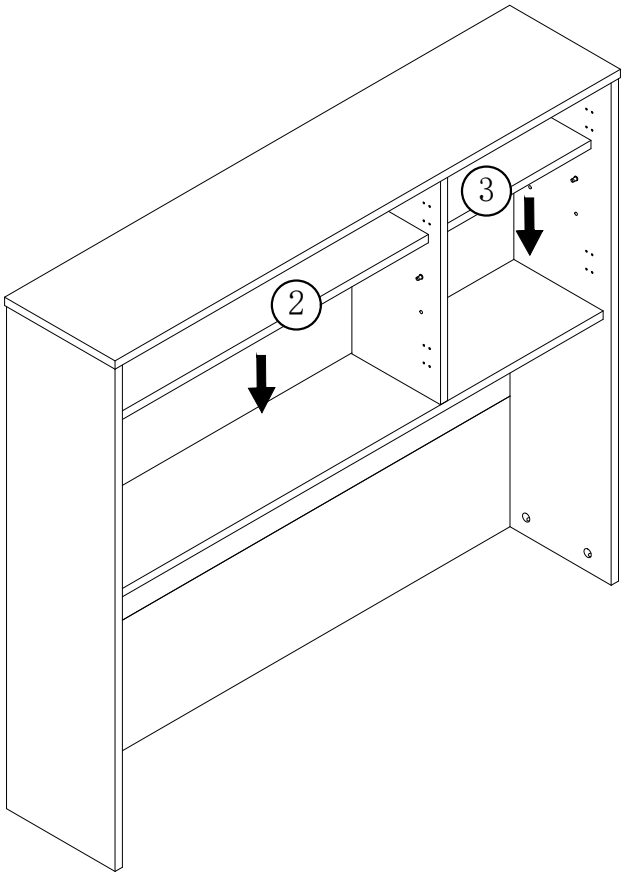

STEP 47

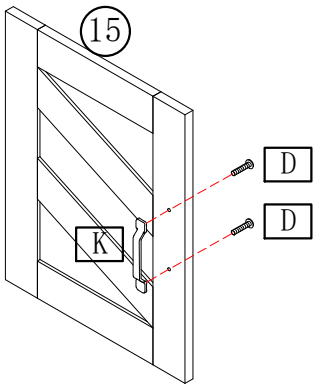

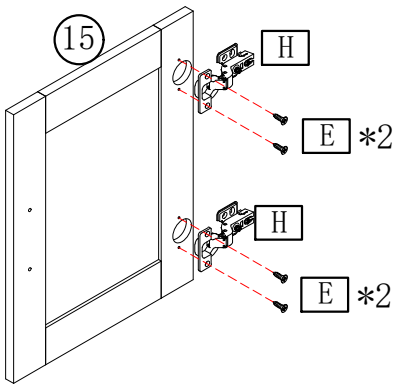

D M4*18 *2	E M3.5*14 *4	H *2	K *1

STEP 48

X2

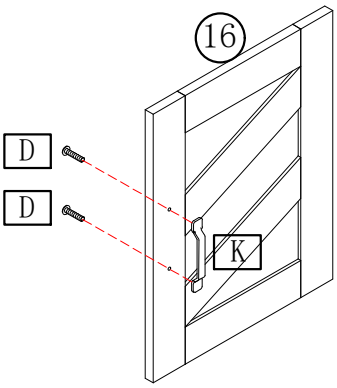

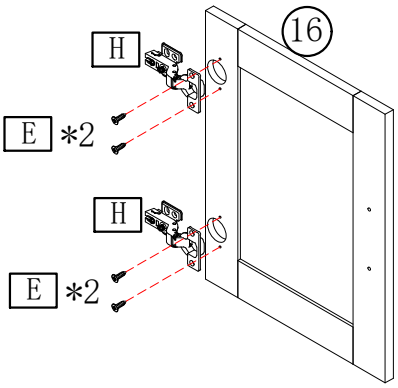

D M4*18 *4	E M3.5*14 *8	H *4	K *2

STEP 49

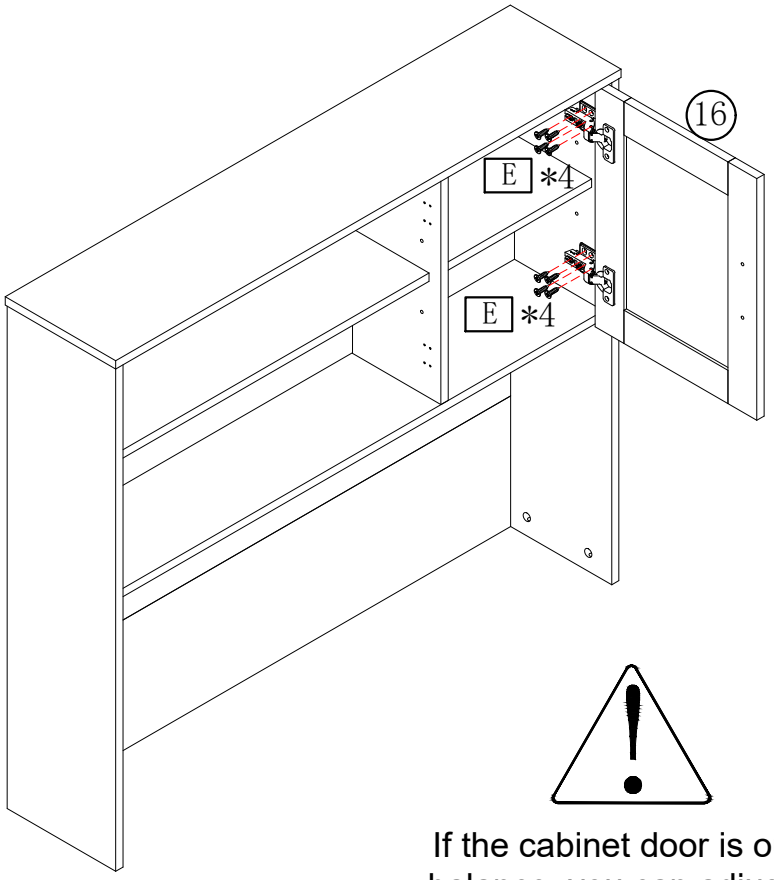

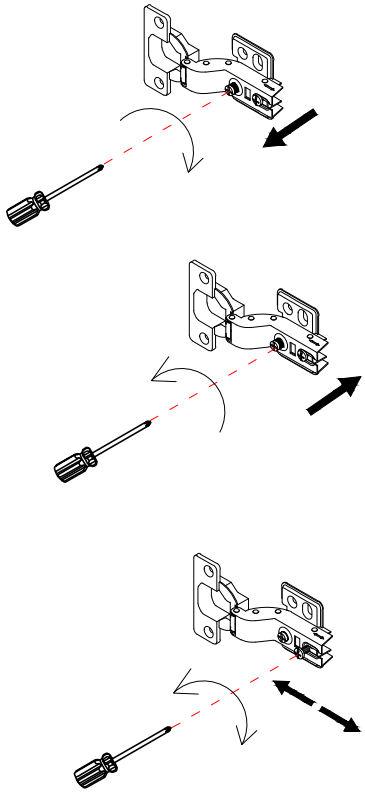

If the cabinet door is out of balance, you can adjust the hinge

E M3.5*14 *8

STEP 50

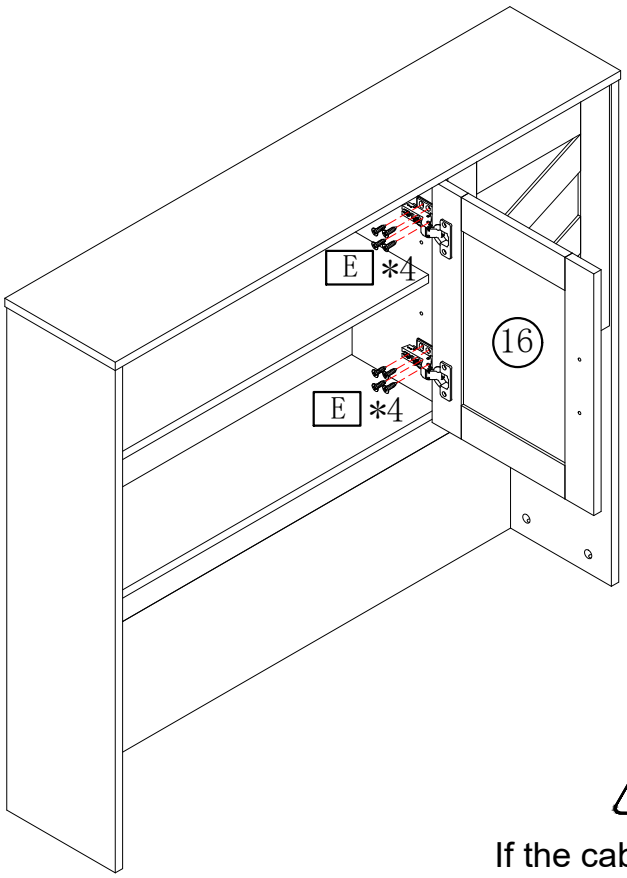

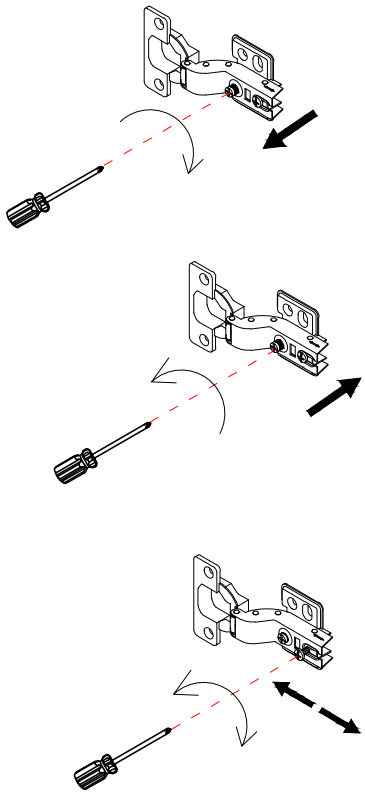

If the cabinet door is out of balance, you can adjust the hinge

E M3.5*14 *8

STEP 51

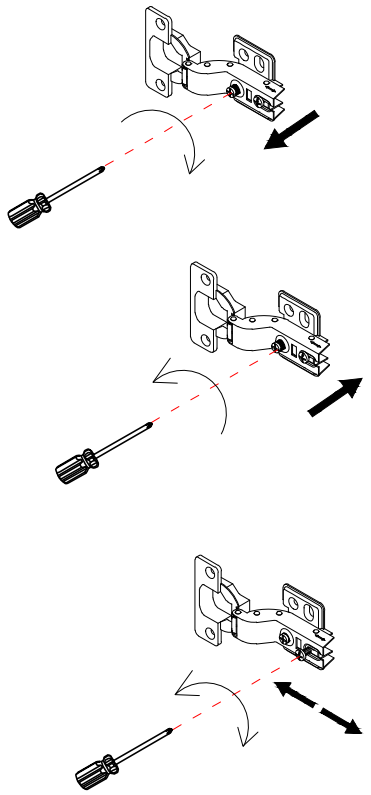

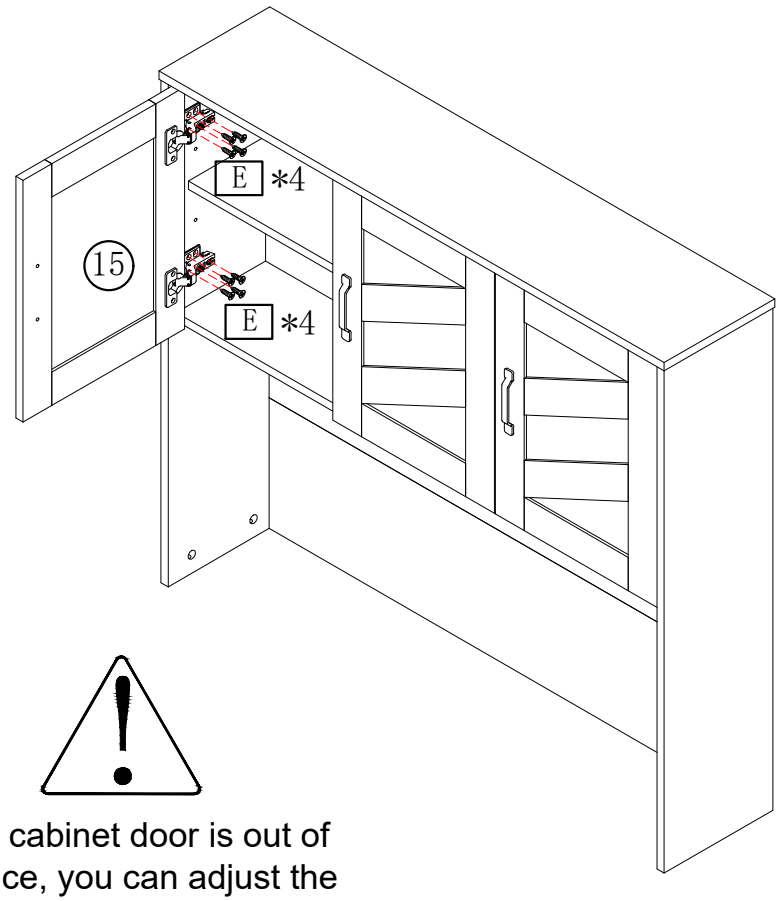

If the cabinet door is out of balance, you can adjust the hinge

E M3.5*14

*8

STEP 52

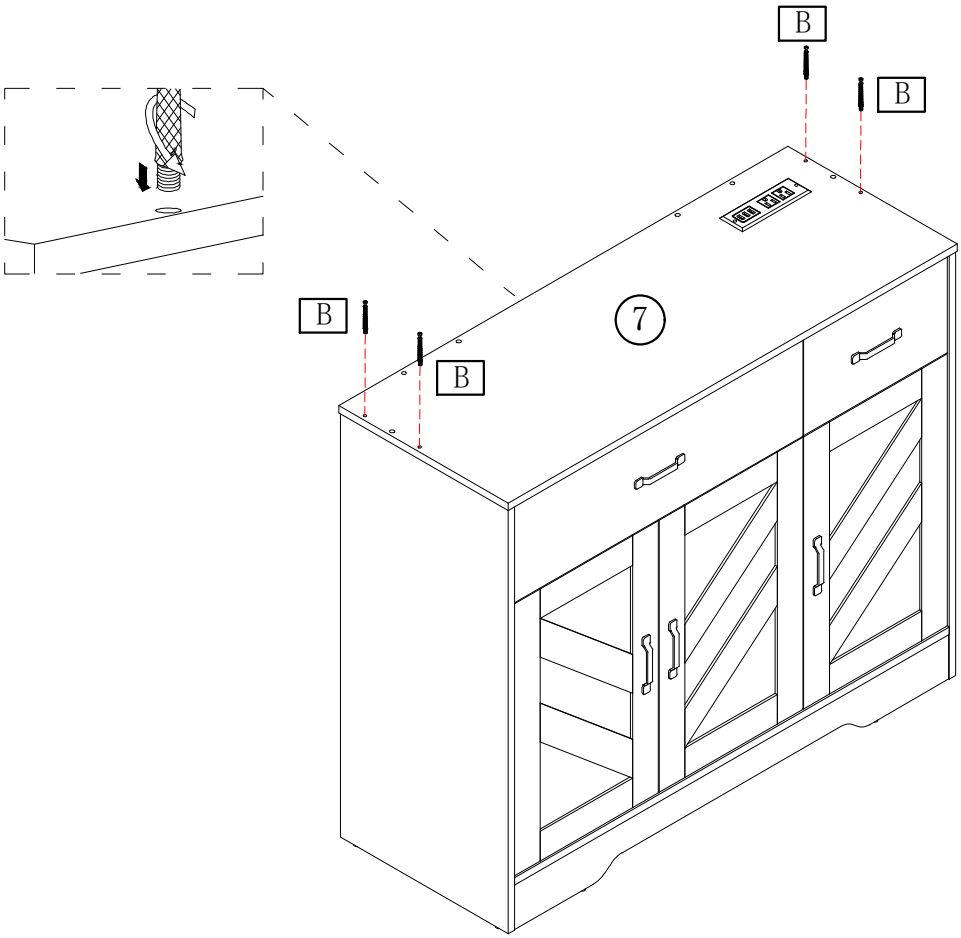

B KM6*40

*4

STEP 53

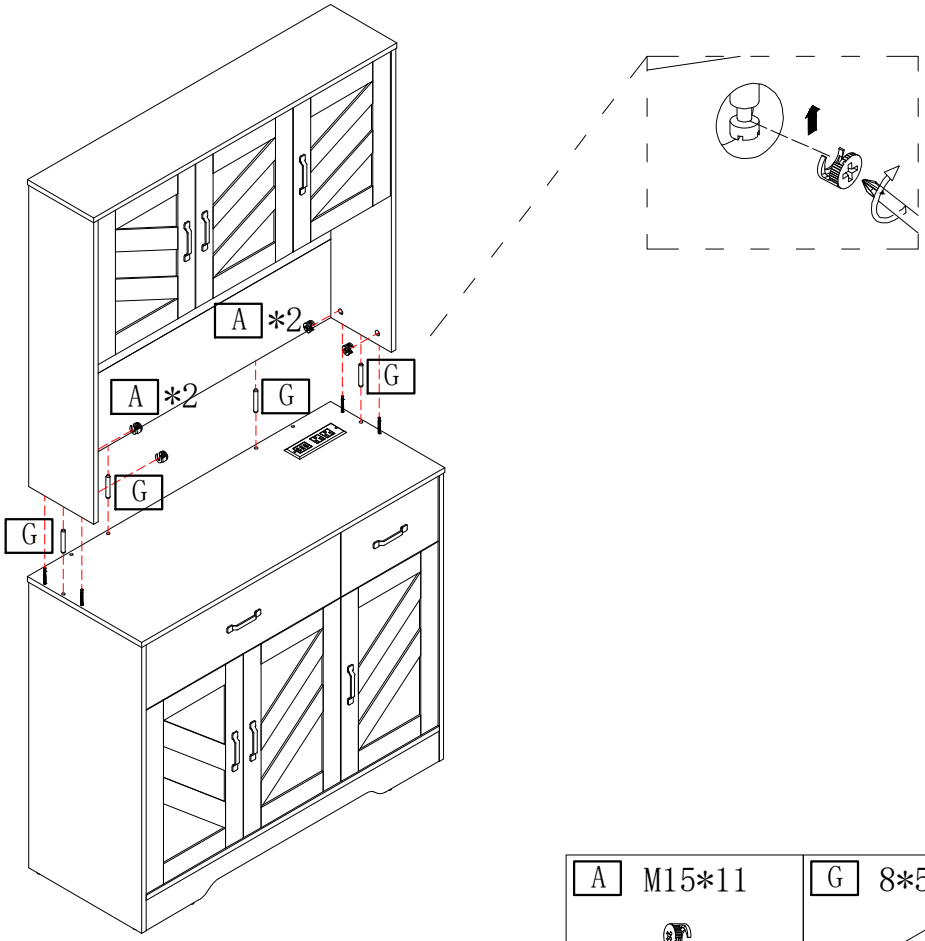

A M15*11 *4	G 8*50mm *4

STEP 54

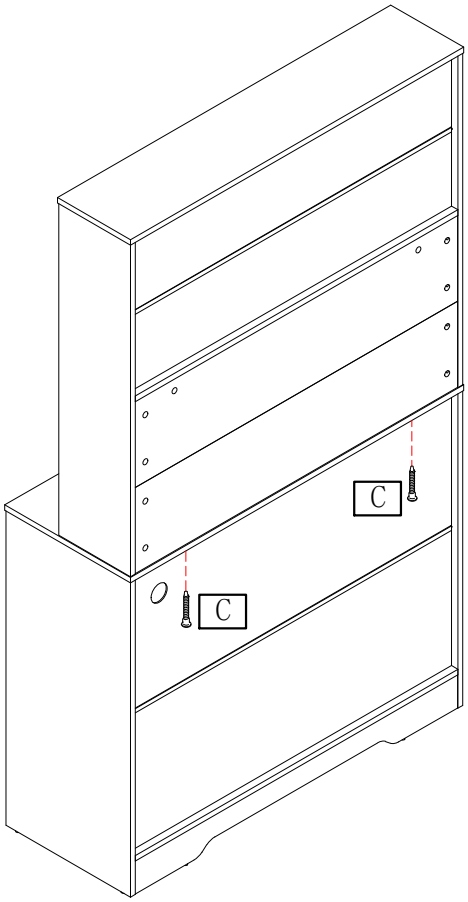

C M7*50 *2

STEP 55

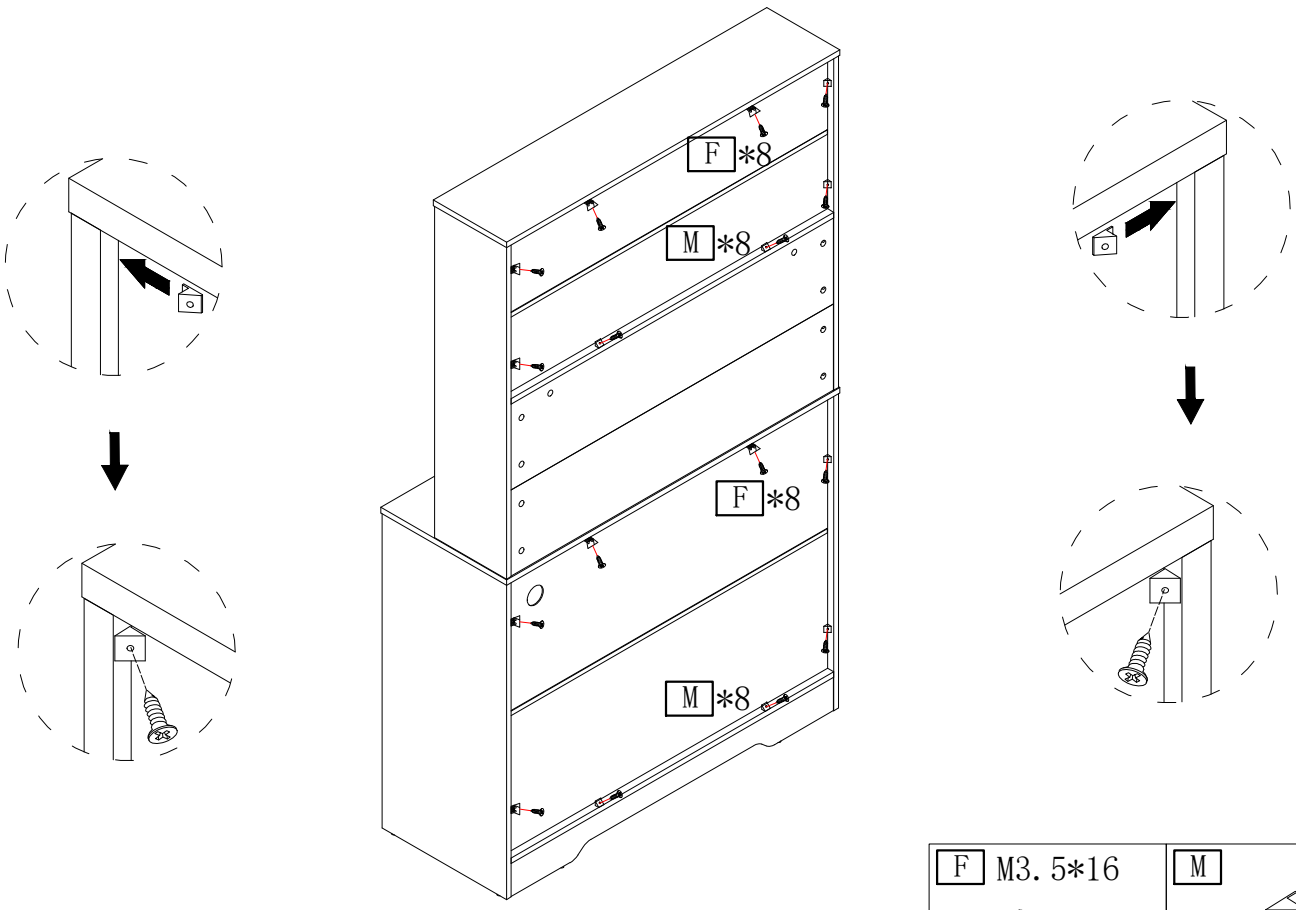

F M3.5*16	M
*16	*16

STEP 56

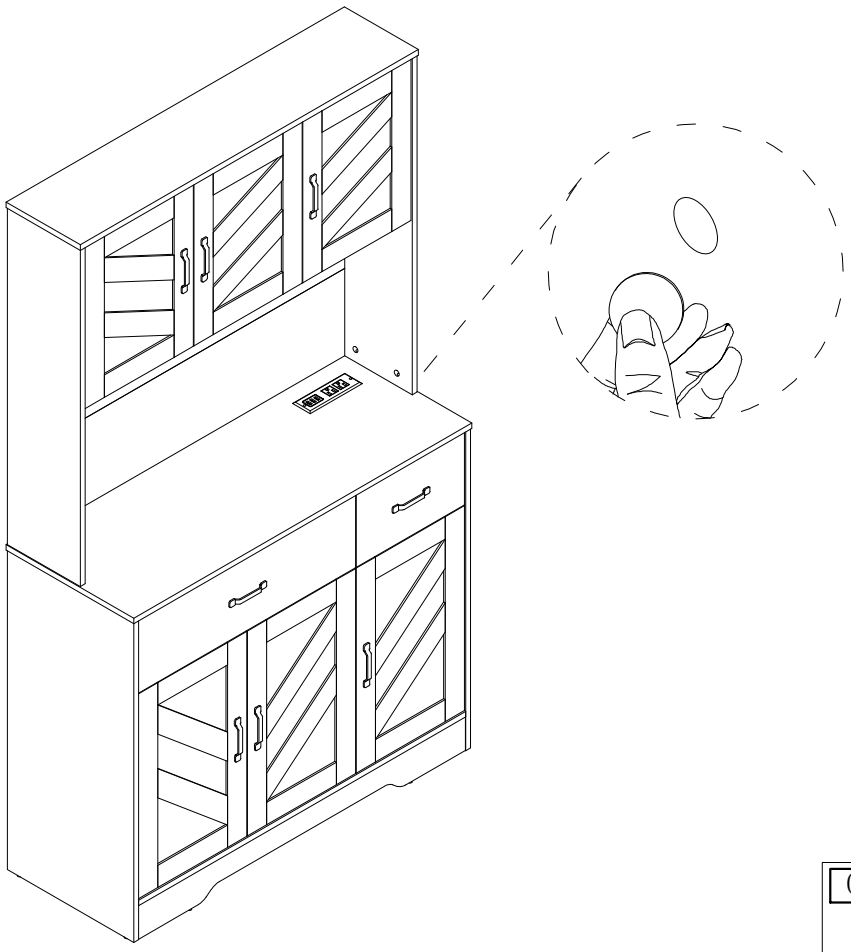

O Ø21mm
*4

STEP 57

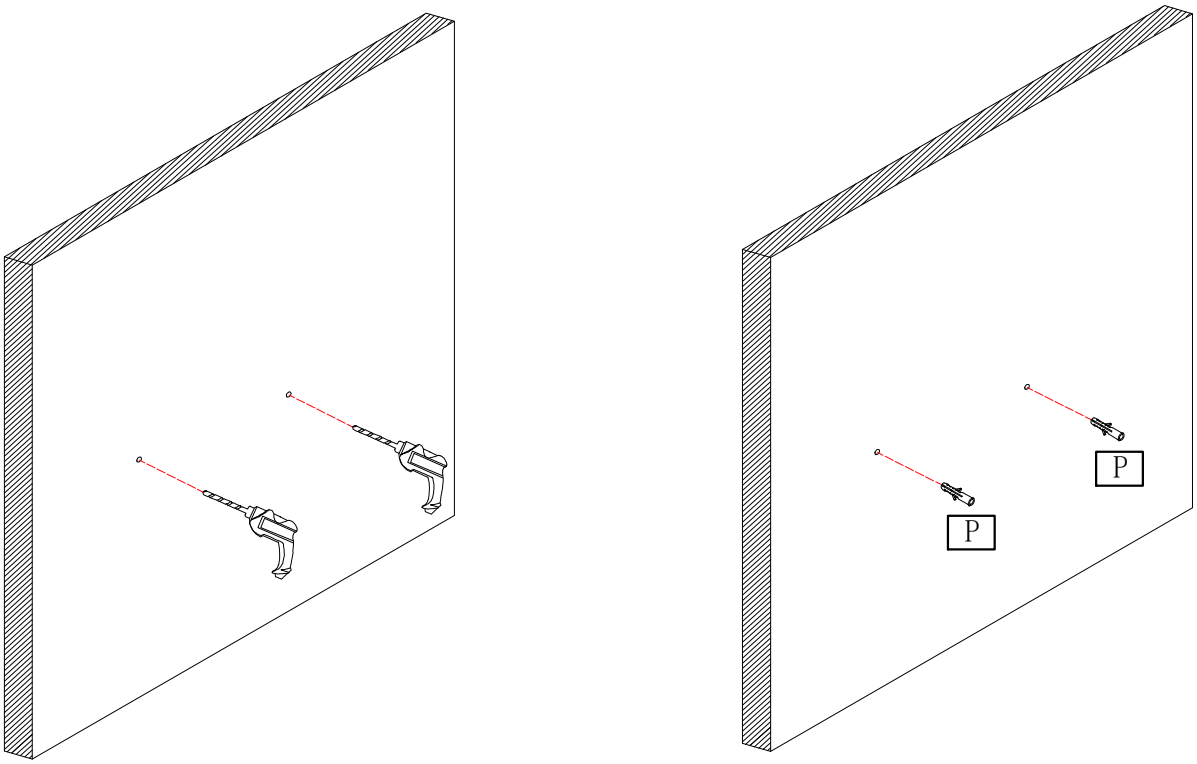

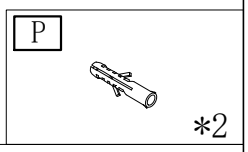

STEP 58

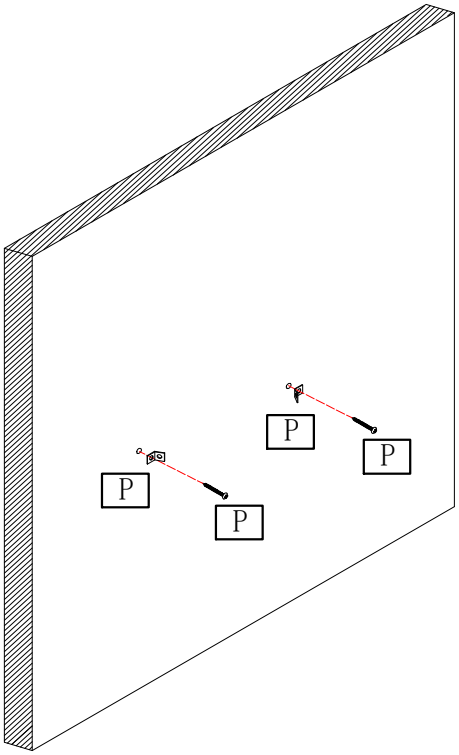

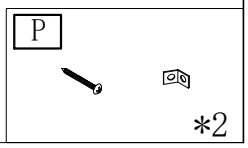

STEP 59

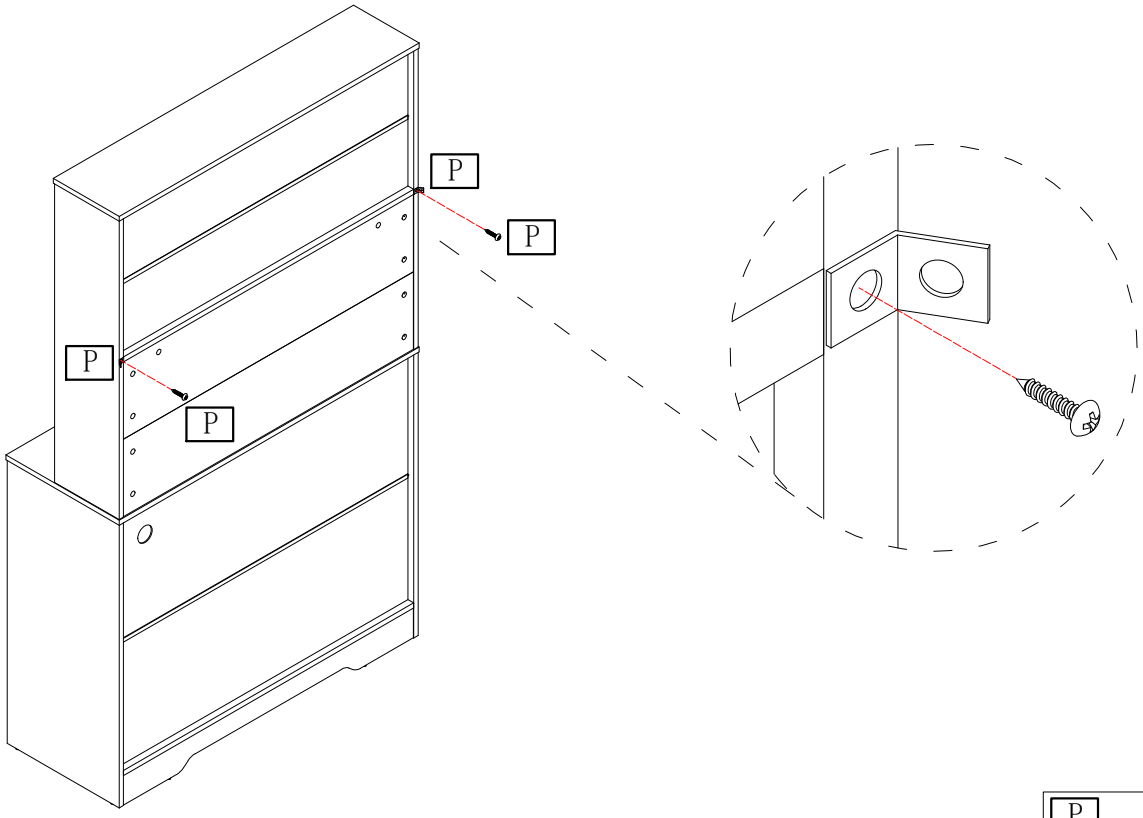

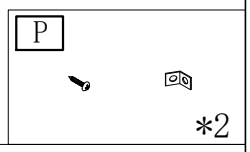

STEP 60

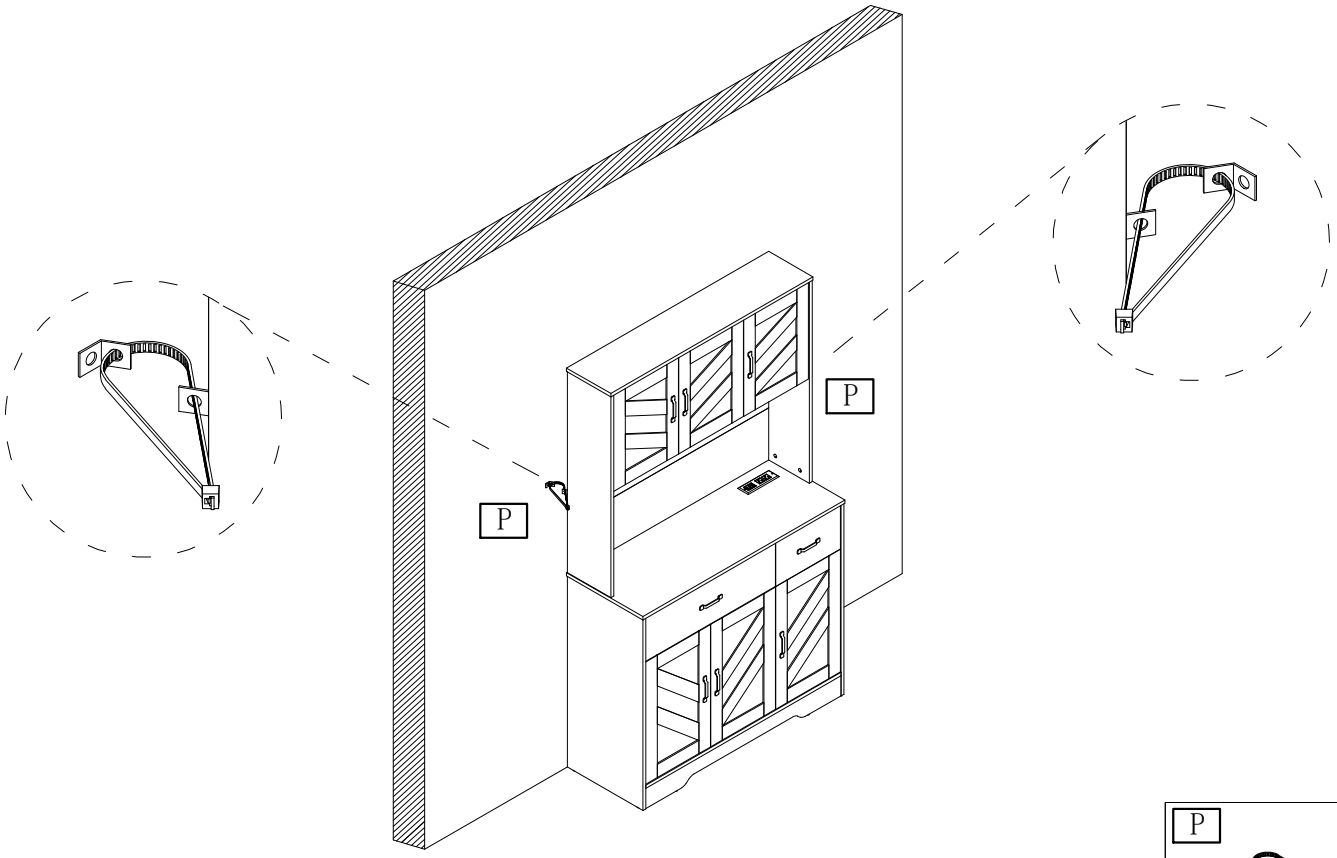

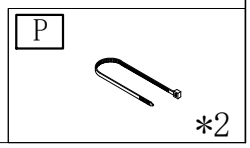

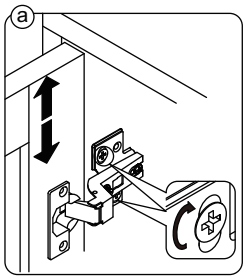

To adjust the door vertically loosen the screw as shown and move up and down as needed.

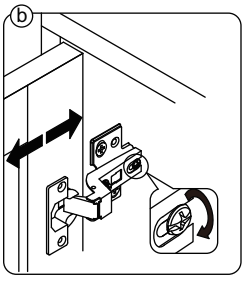

To adjust the gap from the door to the main frame turn the screw clockwise or anti-clockwise as needed.

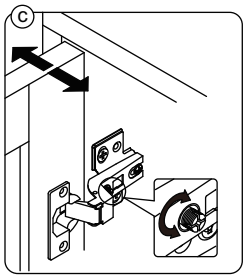

To adjust the door laterally adjust the screw as shown by turning clockwise or anti-clockwise.

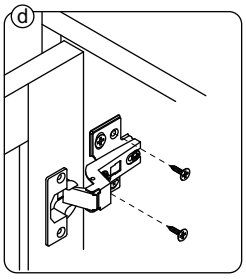

Please fix other screws.

WARNING

Children have died from furniture tipover.
To reduce the risk of furniture tipover:

- ALWAYS install tipover restraintprovided.
- NEVER put a TV on this product.
- NEVER allow children to stand,climb or hang on drawers,doors, or shelves.
- NEVER open more than one drawer at a time.
- Place heaviest items in thelowest drawers.

CONTACT US

Dear customer , thank you for purchasing our products !
We are proud to present our customers with high quality products !

If you have any product quality or use problems ,please contact our customer service by email ,we will ensure your satisfaction .

support@garvee.com