CLCL-N_MB

Rev: 1.00
Date: 2018/11/20

CAD NOTE:
ALL FOOTPRINT OF SMD PARTS ARE 0402
IF THERE IS ANY DIFFERENT WHICH WILL BE SHOWN.

INDEX

001 TATBLE OF CONTENTS
002 BLOCK DIAGRAM

System Diagram

004 POWER FLOW

CPU

014 CPU CHA
015 CPU CHB
016 CPU PCIE
017 CPU MISC
018 CPU POWER
019 CPU GND
021 CPU SIDE BAND

DDR4 DIMMs

023 CHA DIMMA0
024 CHA DIMMA1
025 CHB DIMMB0
026 CHB DIMMB1

PCIE Slot

027 PCIE MUX
028 PCIE REDRIVER
029 PCIE1 X8 OCP 3.0
030 PCIE2 X8 MUX OCP 3.0
031 PCIE2 X8 MUX SLOT

CANNON LAKE PCH

032 PCH SPI/ESPI
033 PCH DMI/PCIE/SATA/USB
034 PCH GPIO/I2C
035 PCH CLOCK
036 PCH XDP
037 PCH POWER
038 PCH GND
039 FLASH SPI/TPM
040 SATA 2.5" HDD
041 M.2 CONN/WIRELESS
041 M.2 CONN/WIRELESS
042 Merge XDP/DEBUG
043 PCH SIDEBAND
044 USB3
046 PCH HEADER
047 FP PWR

AST2500 BMC

050 AST2500 PCIE/DDR4/LPC/SMB
051 AST2500 SPI/UART/RGMII
052 AST2500 VGA/FAN/ADC/USB/SPI
053 AST2500 POWER/GND
056 AST2500 JTAG
057 AST2500 FAN
058 AST2500 STRAP
059 AST2500 PHY0 88E1512
061 AST2500 SMBUS
062 AST2500 VGA
063 ESPI

LAN

065 I350 LAN0
066 I350 LAN0
067 I350 LAN0
068 I350 LAN1
069 I350 LAN1
070 I350 LAN1
071 I350 LAN1 BYPASS01
072 I350 LAN1 BYPASS23
073 I350 LAN2
074 I350 LAN2
075 I350 LAN2
076 I350 LAN3
077 I350 LAN3
078 I350 LAN3

CPLD

079 CPLD-1
080 CPLD-2
081 CPLD-3

Other

082 JTAG MUX
083 2X2 RJ45
084 2x4 RJ45
086 PWR CONN
087 LCM OTHER
088 MECH

Power Solution

090 +3P3V_DUAL_CPLD
091 VCORE CONTROLLER
092 VCORE DRIVER 2-1
093 VCORE DRIVER 2-2
094 VCORE CAP
095 VCCGT DRIVER 1-1
096 VCCGT CAP
097 VCCSA
098 VCCIO
099 1P05V_PCH_DUAL
100 VDDQ & VTT
101 VPP
102 VCCST & 5V_RELAY
103 3P3V_DAUL
104 2P5V_DUAL
105 1P2V_DUAL
106 1P15V_DUAL
107 P1V8/3V3_PGPPA
108 P12V_P5V_DUAL
109.+1V_LAN
110. +1P8V_LAN
110. +1P8V_LAN

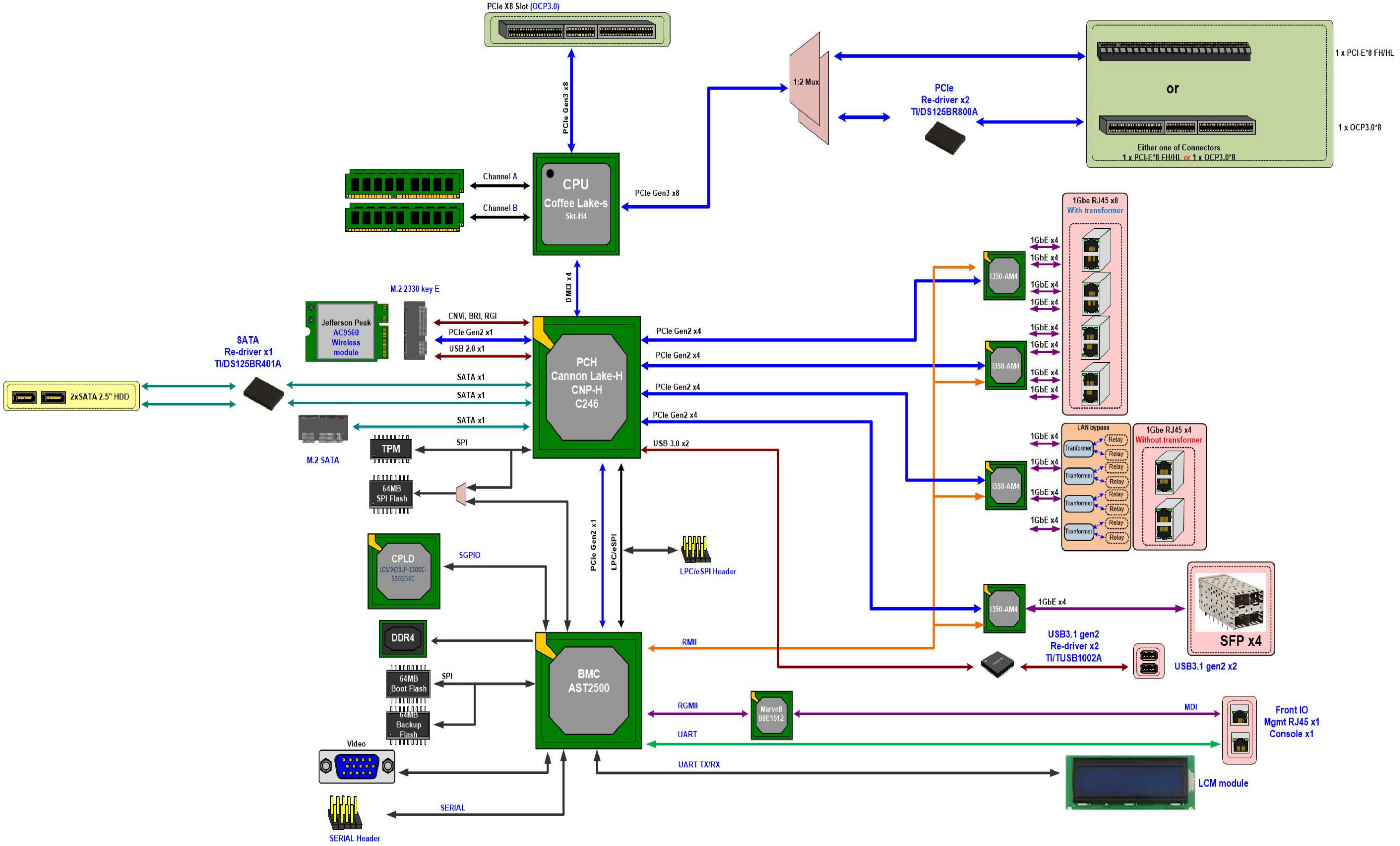
PCIe X8 Slot (OCP3.0)
PCIe Gen3 x8
1:2 Mux
PCIe
Re-driver x2
TI/DS125BR800A
1 x PCI-E*8 FH/HL
or
1 x OCP3.0*8
Either one of Connectors
1 x PCI-E*8 FH/HL or 1 x OCP3.0*8
Channel A
Channel B
CPU
Coffee Lake-s
Skt-H4
PCIe Gen3 x8
DMI3 x4
M.2 2330 key E
Jefferson Peak
AC9560
Wireless
module
CNVi, BRI, RGI
PCIe Gen2 x1
USB 2.0 x1
SATA
Re-driver x1
TI/DS125BR401A
2xSATA 2.5" HDD
SATA x1
SATA x1
SATA x1
M.2 SATA
TPM
SPI
64MB
SPI Flash
PCH
Cannon Lake-H
CNP-H
C246
PCIe Gen2 x4
PCIe Gen2 x4
PCIe Gen2 x4
PCIe Gen2 x4
USB 3.0 x2
I350-AM4
I350-AM4
I350-AM4
I350-AM4
1GbE x4
1GbE x4
1GbE x4
1GbE x4
1GbE x4
1GbE x4
1GbE x4
1GbE x4
1Gbe RJ45 x8
With transformer
1GbE x4
1GbE x4
1GbE x4
1GbE x4
LAN bypass
Tranformer
Tranformer
Tranformer
Tranformer
Relay
Relay
Relay
Relay
Relay
Relay
Relay
Relay
1Gbe RJ45 x4
Without transformer
1GbE x4
SFP x4
CPLD
LCMXO3LF-1300C-
5BG256C
SGPIO
PCIe Gen2 x1
LPC/eSPI
LPC/eSPI Header
DDR4
64MB
Boot Flash
SPI
64MB
Backup
Flash
BMC
AST2500
RMII
USB3.1 gen2
Re-driver x2
TI/TUSB1002A
USB3.1 gen2 x2
RGMII
Marvell
88E1512
MDI
Front IO
Mgmt RJ45 x1
Console x1
UART
UART TX/RX
Video
LCM module
SERIAL
SERIAL Header

<Variant Name>

PEGATRON **Title : 002 BLOCK DIAGRA**

PEGATRON PROPRIETARY AND CONFIDENTIAL

PEGATRON CORPORATION **Engineer:** *Ryan2_Wang*

Size	Project Name	Rev
A3	CLCL-N	1.00

Date: Tuesday, November 27, 2018 Sheet 2 of 110

D D

C C

B B

A A

<Variant Name>

PEGATRON **Title :** 003 PAGE
PEGATRON PROPRIETARY AND CONFIDENTIAL
PEGATRON CORPORATION **Engineer:** *Ryan2_Wang*

Size	Project Name	Rev
A3	CLCL-N	1.00

Date: Tuesday, November 27, 2018 Sheet 3 of 110

Mehlow/CLCL-N Power Flow

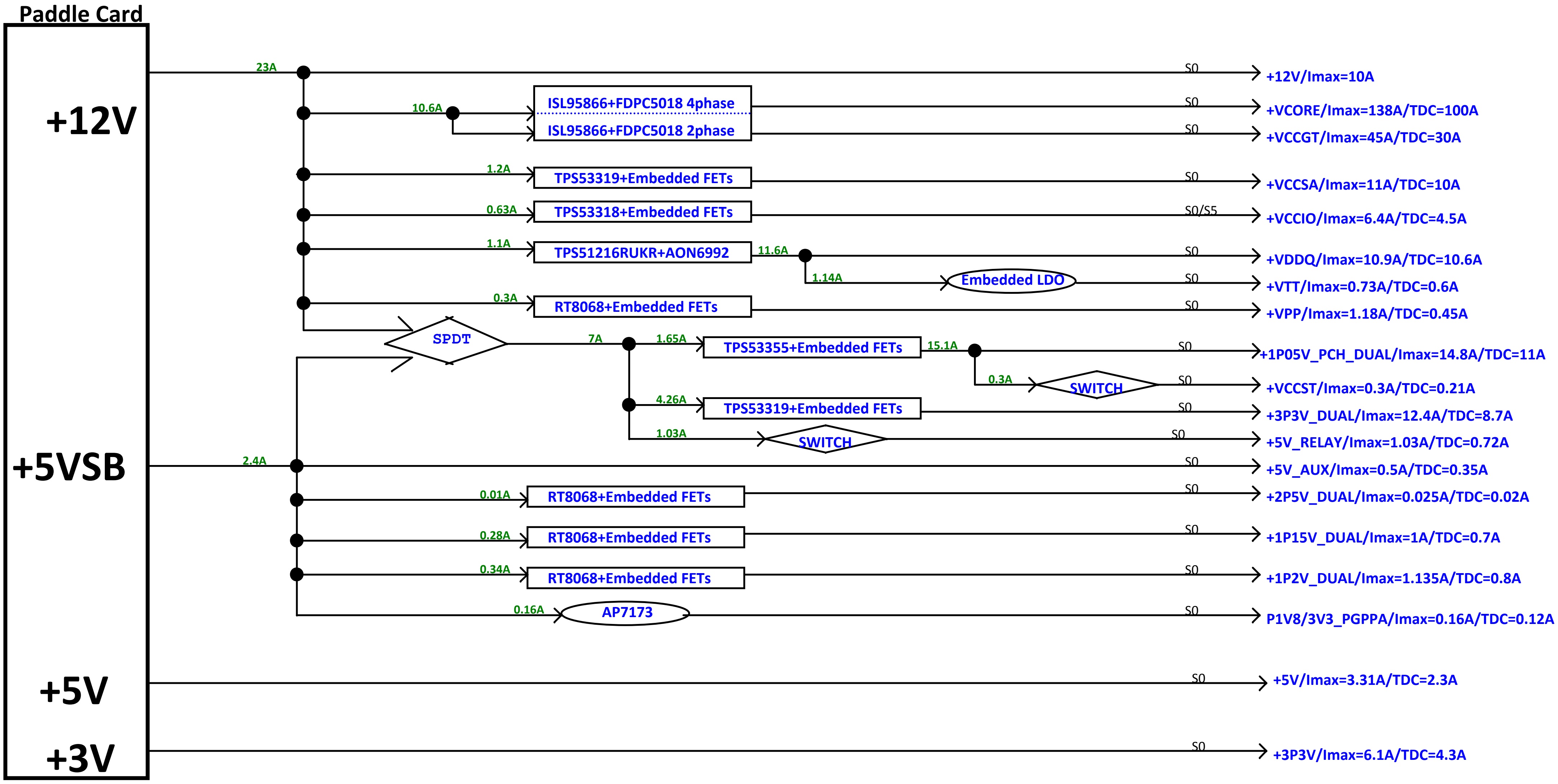
Paddle Card
+12V
+5VSB
+5V
+3V
23A
S0
+12V/Imax=10A
10.6A
ISL95866+FDPC5018 4phase
ISL95866+FDPC5018 2phase
S0
+VCORE/Imax=138A/TDC=100A
S0
+VCCGT/Imax=45A/TDC=30A
1.2A
TPS53319+Embedded FETs
S0
+VCCSA/Imax=11A/TDC=10A
0.63A
TPS53318+Embedded FETs
S0/S5
+VCCIO/Imax=6.4A/TDC=4.5A
1.1A
TPS51216RUKR+AON6992
11.6A
S0
+VDDQ/Imax=10.9A/TDC=10.6A
1.14A
Embedded LDO
S0
+VTT/Imax=0.73A/TDC=0.6A
0.3A
RT8068+Embedded FETs
S0
+VPP/Imax=1.18A/TDC=0.45A
SPDT
7A
1.65A
TPS53355+Embedded FETs
15.1A
S0
+1P05V_PCH_DUAL/Imax=14.8A/TDC=11A
0.3A
SWITCH
S0
+VCCST/Imax=0.3A/TDC=0.21A
4.26A
TPS53319+Embedded FETs
S0
+3P3V_DUAL/Imax=12.4A/TDC=8.7A
1.03A
SWITCH
S0
+5V_RELAY/Imax=1.03A/TDC=0.72A
2.4A
S0
+5V_AUX/Imax=0.5A/TDC=0.35A
0.01A
RT8068+Embedded FETs
S0
+2P5V_DUAL/Imax=0.025A/TDC=0.02A
0.28A
RT8068+Embedded FETs
S0
+1P15V_DUAL/Imax=1A/TDC=0.7A
0.34A
RT8068+Embedded FETs
S0
+1P2V_DUAL/Imax=1.135A/TDC=0.8A
0.16A
AP7173
S0
P1V8/3V3_PGPPA/Imax=0.16A/TDC=0.12A
S0
+5V/Imax=3.31A/TDC=2.3A
S0
+3P3V/Imax=6.1A/TDC=4.3A

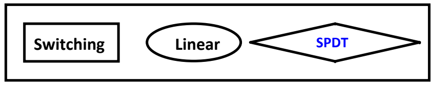
Switching
Linear
SPDT

<Variant Name>

PEGATRON	Title :	004 POWER FLOW
<OrgName>	Engineer:	Gary Chang
Size A2	Project Name CLCL-N	Rev 1.00
Date: Tuesday, November 27, 2018	Sheet 4 of 110	

D D

C C

B B

A A

<Variant Name>

PEGATRON **Title :** 005 PAGE
PEGATRON PROPRIETARY AND CONFIDENTIAL
PEGATRON CORPORATION **Engineer:** *Ryan2_Wang*

Size	Project Name	Rev
A3	CLCL-N	1.00

Date: Tuesday, November 27, 2018 Sheet 5 of 110

<Variant Name>

PEGATRON **Title :** 006 PAGE
PEGATRON PROPRIETARY AND CONFIDENTIAL
PEGATRON CORPORATION **Engineer:** *Ryan2_Wang*

Size	Project Name	Rev
A3	CLCL-N	1.00

Date: Tuesday, November 27, 2018 Sheet 6 of 110

<Variant Name>

PEGATRON **Title :** **007 PAGE**

PEGATRON PROPRIETARY AND CONFIDENTIAL

PEGATRON CORPORATION **Engineer:** ***Ryan2_Wang***

Size	Project Name	Rev
A3	CLCL-N	1.00

Date: Tuesday, November 27, 2018 Sheet 7 of 110

D D

C C

B B

A A

<Variant Name>

PEGATRON **Title :** **008 PAGE**

PEGATRON PROPRIETARY AND CONFIDENTIAL

PEGATRON CORPORATION **Engineer:** ***Ryan2_Wang***

Size	Project Name	Rev
A3	CLCL-N	1.00

Date: Tuesday, November 27, 2018 Sheet 8 of 110

<Variant Name>

PEGATRON **Title :** 009 PAGE

PEGATRON PROPRIETARY AND CONFIDENTIAL

PEGATRON CORPORATION **Engineer:** *Ryan2_Wang*

Size	Project Name	Rev
A3	CLCL-N	1.00

Date: Tuesday, November 27, 2018 Sheet 9 of 110

D C B A

<Variant Name>

PEGATRON PEGATRON PROPRIETARY AND CONFIDENTIAL	**Title :**	010 PAGE
PEGATRON CORPORATION	**Engineer:**	*Ryan2_Wang*
Size A3	Project Name CLCL-N	Rev 1.00
Date: Tuesday, November 27, 2018	Sheet 10 of 110	

<Variant Name>

PEGATRON **Title :** **011 PAGE**
PEGATRON PROPRIETARY AND CONFIDENTIAL
PEGATRON CORPORATION **Engineer:** ***Ryan2_Wang***

Size	Project Name	Rev
A3	**CLCL-N**	1.00

Date: Tuesday, November 27, 2018 Sheet 11 of 110

D C B A

<Variant Name>

PEGATRON **Title :** 012 PAGE
PEGATRON PROPRIETARY AND CONFIDENTIAL
PEGATRON CORPORATION **Engineer:** *Ryan2_Wang*

Size	Project Name	Rev
A3	CLCL-N	1.00

Date: Tuesday, November 27, 2018 Sheet 12 of 110

<Variant Name>

PEGATRON **Title :** 013 PAGE
PEGATRON PROPRIETARY AND CONFIDENTIAL
PEGATRON CORPORATION **Engineer:** *Ryan2_Wang*

Size	Project Name	Rev
A3	CLCL-N	1.00

Date: Tuesday, November 27, 2018 Sheet 13 of 110

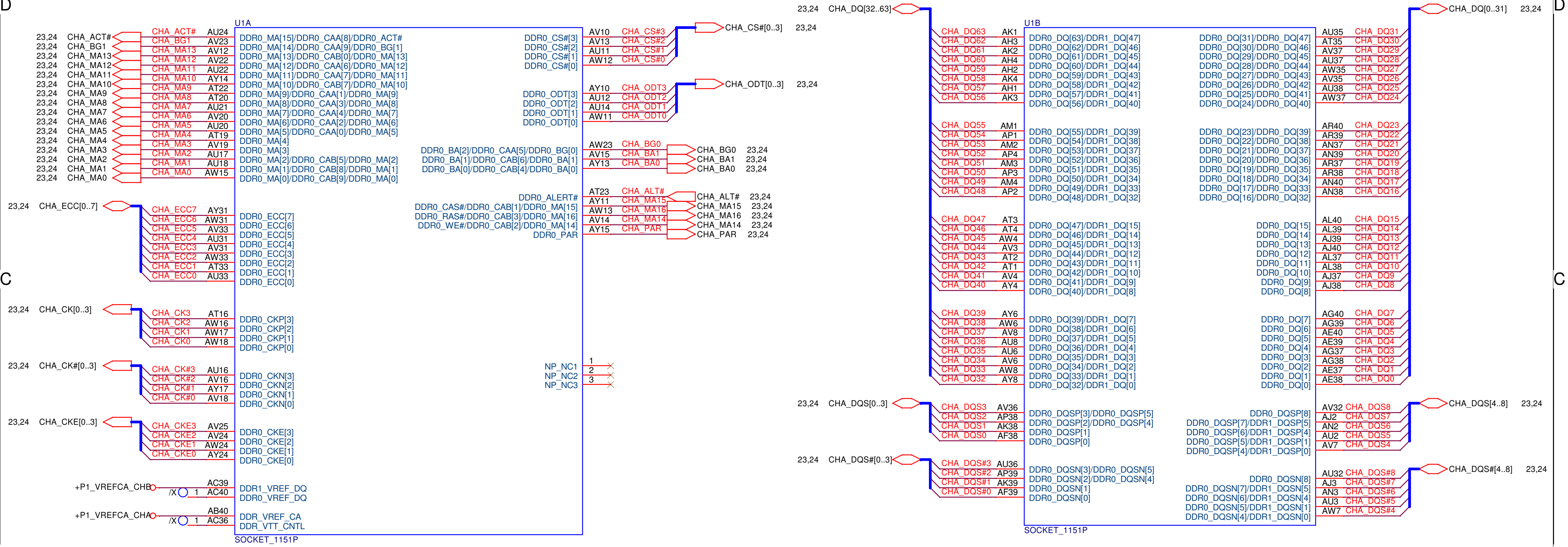
U1A
23,24 CHA_ACT# CHA_ACT# AU24 DDR0_MA[15]/DDR0_CAA[8]/DDR0_ACT#
23,24 CHA_BG1 CHA_BG1 AV23 DDR0_MA[14]/DDR0_CAA[9]/DDR0_BG[1]
23,24 CHA_MA13 CHA_MA13 AV12 DDR0_MA[13]/DDR0_CAB[0]/DDR0_MA[13]
23,24 CHA_MA12 CHA_MA12 AV22 DDR0_MA[12]/DDR0_CAA[6]/DDR0_MA[12]
23,24 CHA_MA11 CHA_MA11 AU22 DDR0_MA[11]/DDR0_CAA[7]/DDR0_MA[11]
23,24 CHA_MA10 CHA_MA10 AY14 DDR0_MA[10]/DDR0_CAB[7]/DDR0_MA[10]
23,24 CHA_MA9 CHA_MA9 AT22 DDR0_MA[9]/DDR0_CAA[1]/DDR0_MA[9]
23,24 CHA_MA8 CHA_MA8 AT20 DDR0_MA[8]/DDR0_CAA[3]/DDR0_MA[8]
23,24 CHA_MA7 CHA_MA7 AU21 DDR0_MA[7]/DDR0_CAA[4]/DDR0_MA[7]
23,24 CHA_MA6 CHA_MA6 AV20 DDR0_MA[6]/DDR0_CAA[2]/DDR0_MA[6]
23,24 CHA_MA5 CHA_MA5 AU20 DDR0_MA[5]/DDR0_CAA[0]/DDR0_MA[5]
23,24 CHA_MA4 CHA_MA4 AT19 DDR0_MA[4]
23,24 CHA_MA3 CHA_MA3 AV19 DDR0_MA[3]
23,24 CHA_MA2 CHA_MA2 AU17 DDR0_MA[2]/DDR0_CAB[5]/DDR0_MA[2]
23,24 CHA_MA1 CHA_MA1 AU18 DDR0_MA[1]/DDR0_CAB[8]/DDR0_MA[1]
23,24 CHA_MA0 CHA_MA0 AW15 DDR0_MA[0]/DDR0_CAB[9]/DDR0_MA[0]
23,24 CHA_ECC[0..7]
CHA_ECC7 AY31 DDR0_ECC[7]
CHA_ECC6 AW31 DDR0_ECC[6]
CHA_ECC5 AV33 DDR0_ECC[5]
CHA_ECC4 AU31 DDR0_ECC[4]
CHA_ECC3 AV31 DDR0_ECC[3]
CHA_ECC2 AW33 DDR0_ECC[2]
CHA_ECC1 AT33 DDR0_ECC[1]
CHA_ECC0 AU33 DDR0_ECC[0]
23,24 CHA_CK[0..3]
CHA_CK3 AT16 DDR0_CKP[3]
CHA_CK2 AW16 DDR0_CKP[2]
CHA_CK1 AW17 DDR0_CKP[1]
CHA_CK0 AW18 DDR0_CKP[0]
23,24 CHA_CK#[0..3]
CHA_CK#3 AU16 DDR0_CKN[3]
CHA_CK#2 AV16 DDR0_CKN[2]
CHA_CK#1 AV17 DDR0_CKN[1]
CHA_CK#0 AV18 DDR0_CKN[0]
23,24 CHA_CKE[0..3]
CHA_CKE3 AV25 DDR0_CKE[3]
CHA_CKE2 AV24 DDR0_CKE[2]
CHA_CKE1 AW24 DDR0_CKE[1]
CHA_CKE0 AY24 DDR0_CKE[0]
+P1_VREFCA_CHB AC39 DDR1_VREF_DQ
/X 1 AC40 DDR0_VREF_DQ
+P1_VREFCA_CHA AB40 DDR_VREF_CA
/X 1 AC36 DDR_VTT_CNTL
SOCKET_1151P
DDR0_CS#[3] AV10 CHA_CS#3
DDR0_CS#[2] AV13 CHA_CS#2
DDR0_CS#[1] AU11 CHA_CS#1
DDR0_CS#[0] AW12 CHA_CS#0
CHA_CS#[0..3] 23,24
DDR0_ODT[3] AY10 CHA_ODT3
DDR0_ODT[2] AU12 CHA_ODT2
DDR0_ODT[1] AU14 CHA_ODT1
DDR0_ODT[0] AW11 CHA_ODT0
CHA_ODT[0..3] 23,24
DDR0_BA[2]/DDR0_CAA[5]/DDR0_BG[0] AW23 CHA_BG0 CHA_BG0 23,24
DDR0_BA[1]/DDR0_CAB[6]/DDR0_BA[1] AV15 CHA_BA1 CHA_BA1 23,24
DDR0_BA[0]/DDR0_CAB[4]/DDR0_BA[0] AY13 CHA_BA0 CHA_BA0 23,24
DDR0_ALERT# AT23 CHA_ALT# CHA_ALT# 23,24
DDR0_CAS#/DDR0_CAB[1]/DDR0_MA[15] AY11 CHA_MA15 CHA_MA15 23,24
DDR0_RAS#/DDR0_CAB[3]/DDR0_MA[16] AW13 CHA_MA16 CHA_MA16 23,24
DDR0_WE#/DDR0_CAB[2]/DDR0_MA[14] AV14 CHA_MA14 CHA_MA14 23,24
DDR0_PAR AY15 CHA_PAR CHA_PAR 23,24
NP_NC1 1
NP_NC2 2
NP_NC3 3
U1B
23,24 CHA_DQ[32..63]
CHA_DQ63 AK1 DDR0_DQ[63]/DDR1_DQ[47]
CHA_DQ62 AH3 DDR0_DQ[62]/DDR1_DQ[46]
CHA_DQ61 AK2 DDR0_DQ[61]/DDR1_DQ[45]
CHA_DQ60 AH4 DDR0_DQ[60]/DDR1_DQ[44]
CHA_DQ59 AH2 DDR0_DQ[59]/DDR1_DQ[43]
CHA_DQ58 AK4 DDR0_DQ[58]/DDR1_DQ[42]
CHA_DQ57 AH1 DDR0_DQ[57]/DDR1_DQ[41]
CHA_DQ56 AK3 DDR0_DQ[56]/DDR1_DQ[40]
CHA_DQ55 AM1 DDR0_DQ[55]/DDR1_DQ[39]
CHA_DQ54 AP1 DDR0_DQ[54]/DDR1_DQ[38]
CHA_DQ53 AM2 DDR0_DQ[53]/DDR1_DQ[37]
CHA_DQ52 AP4 DDR0_DQ[52]/DDR1_DQ[36]
CHA_DQ51 AM3 DDR0_DQ[51]/DDR1_DQ[35]
CHA_DQ50 AP3 DDR0_DQ[50]/DDR1_DQ[34]
CHA_DQ49 AM4 DDR0_DQ[49]/DDR1_DQ[33]
CHA_DQ48 AP2 DDR0_DQ[48]/DDR1_DQ[32]
CHA_DQ47 AT3 DDR0_DQ[47]/DDR1_DQ[15]
CHA_DQ46 AT4 DDR0_DQ[46]/DDR1_DQ[14]
CHA_DQ45 AW4 DDR0_DQ[45]/DDR1_DQ[13]
CHA_DQ44 AV3 DDR0_DQ[44]/DDR1_DQ[12]
CHA_DQ43 AT2 DDR0_DQ[43]/DDR1_DQ[11]
CHA_DQ42 AT1 DDR0_DQ[42]/DDR1_DQ[10]
CHA_DQ41 AV4 DDR0_DQ[41]/DDR1_DQ[9]
CHA_DQ40 AY4 DDR0_DQ[40]/DDR1_DQ[8]
CHA_DQ39 AY6 DDR0_DQ[39]/DDR1_DQ[7]
CHA_DQ38 AW6 DDR0_DQ[38]/DDR1_DQ[6]
CHA_DQ37 AV8 DDR0_DQ[37]/DDR1_DQ[5]
CHA_DQ36 AU8 DDR0_DQ[36]/DDR1_DQ[4]
CHA_DQ35 AU6 DDR0_DQ[35]/DDR1_DQ[3]
CHA_DQ34 AV6 DDR0_DQ[34]/DDR1_DQ[2]
CHA_DQ33 AW8 DDR0_DQ[33]/DDR1_DQ[1]
CHA_DQ32 AY8 DDR0_DQ[32]/DDR1_DQ[0]
23,24 CHA_DQS[0..3]
CHA_DQS3 AV36 DDR0_DQSP[3]/DDR0_DQSP[5]
CHA_DQS2 AP38 DDR0_DQSP[2]/DDR0_DQSP[4]
CHA_DQS1 AK38 DDR0_DQSP[1]
CHA_DQS0 AF38 DDR0_DQSP[0]
23,24 CHA_DQS#[0..3]
CHA_DQS#3 AU36 DDR0_DQSN[3]/DDR0_DQSN[5]
CHA_DQS#2 AP39 DDR0_DQSN[2]/DDR0_DQSN[4]
CHA_DQS#1 AK39 DDR0_DQSN[1]
CHA_DQS#0 AF39 DDR0_DQSN[0]
SOCKET_1151P
CHA_DQ[0..31] 23,24
DDR0_DQ[31]/DDR0_DQ[47] AU35 CHA_DQ31
DDR0_DQ[30]/DDR0_DQ[46] AT35 CHA_DQ30
DDR0_DQ[29]/DDR0_DQ[45] AV37 CHA_DQ29
DDR0_DQ[28]/DDR0_DQ[44] AU37 CHA_DQ28
DDR0_DQ[27]/DDR0_DQ[43] AW35 CHA_DQ27
DDR0_DQ[26]/DDR0_DQ[42] AV35 CHA_DQ26
DDR0_DQ[25]/DDR0_DQ[41] AU38 CHA_DQ25
DDR0_DQ[24]/DDR0_DQ[40] AW37 CHA_DQ24
DDR0_DQ[23]/DDR0_DQ[39] AR40 CHA_DQ23
DDR0_DQ[22]/DDR0_DQ[38] AR39 CHA_DQ22
DDR0_DQ[21]/DDR0_DQ[37] AN37 CHA_DQ21
DDR0_DQ[20]/DDR0_DQ[36] AN39 CHA_DQ20
DDR0_DQ[19]/DDR0_DQ[35] AR37 CHA_DQ19
DDR0_DQ[18]/DDR0_DQ[34] AR38 CHA_DQ18
DDR0_DQ[17]/DDR0_DQ[33] AN40 CHA_DQ17
DDR0_DQ[16]/DDR0_DQ[32] AN38 CHA_DQ16
DDR0_DQ[15] AL40 CHA_DQ15
DDR0_DQ[14] AL39 CHA_DQ14
DDR0_DQ[13] AJ39 CHA_DQ13
DDR0_DQ[12] AJ40 CHA_DQ12
DDR0_DQ[11] AL37 CHA_DQ11
DDR0_DQ[10] AL38 CHA_DQ10
DDR0_DQ[9] AJ37 CHA_DQ9
DDR0_DQ[8] AJ38 CHA_DQ8
DDR0_DQ[7] AG40 CHA_DQ7
DDR0_DQ[6] AG39 CHA_DQ6
DDR0_DQ[5] AE40 CHA_DQ5
DDR0_DQ[4] AE39 CHA_DQ4
DDR0_DQ[3] AG37 CHA_DQ3
DDR0_DQ[2] AG38 CHA_DQ2
DDR0_DQ[1] AE37 CHA_DQ1
DDR0_DQ[0] AE38 CHA_DQ0
CHA_DQS[4..8] 23,24
DDR0_DQSP[8] AV32 CHA_DQS8
DDR0_DQSP[7]/DDR1_DQSP[5] AJ2 CHA_DQS7
DDR0_DQSP[6]/DDR1_DQSP[4] AN2 CHA_DQS6
DDR0_DQSP[5]/DDR1_DQSP[1] AU2 CHA_DQS5
DDR0_DQSP[4]/DDR1_DQSP[0] AV7 CHA_DQS4
CHA_DQS#[4..8] 23,24
DDR0_DQSN[8] AU32 CHA_DQS#8
DDR0_DQSN[7]/DDR1_DQSN[5] AJ3 CHA_DQS#7
DDR0_DQSN[6]/DDR1_DQSN[4] AN3 CHA_DQS#6
DDR0_DQSN[5]/DDR1_DQSN[1] AU3 CHA_DQS#5
DDR0_DQSN[4]/DDR1_DQSN[0] AW7 CHA_DQS#4

<Variant Name>

PEGATRON **Title :** 014 CPU CHA
PEGATRON PROPRIETARY AND CONFIDENTIAL
PEGATRON CORPORATION **Engineer:** *Ryan2_Wang*

Size	Project Name	Rev
A3	CLCL-N	1.00

Date: Tuesday, November 27, 2018 Sheet 14 of 110

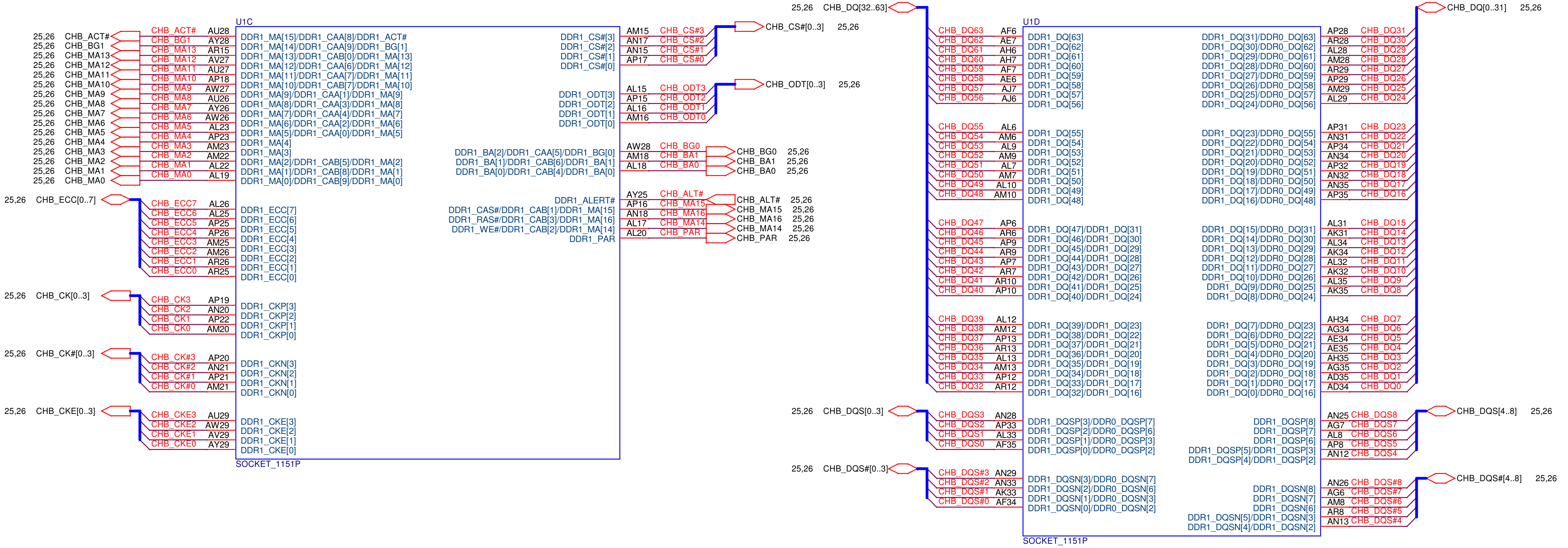

5
4
3
2
1
D
C
B
A
U1C
25,26 CHB_ACT#
25,26 CHB_BG1
25,26 CHB_MA13
25,26 CHB_MA12
25,26 CHB_MA11
25,26 CHB_MA10
25,26 CHB_MA9
25,26 CHB_MA8
25,26 CHB_MA7
25,26 CHB_MA6
25,26 CHB_MA5
25,26 CHB_MA4
25,26 CHB_MA3
25,26 CHB_MA2
25,26 CHB_MA1
25,26 CHB_MA0
CHB_ACT# AU28 DDR1_MA[15]/DDR1_CAA[8]/DDR1_ACT#
CHB_BG1 AY28 DDR1_MA[14]/DDR1_CAA[9]/DDR1_BG[1]
CHB_MA13 AR15 DDR1_MA[13]/DDR1_CAB[0]/DDR1_MA[13]
CHB_MA12 AV27 DDR1_MA[12]/DDR1_CAA[6]/DDR1_MA[12]
CHB_MA11 AU27 DDR1_MA[11]/DDR1_CAA[7]/DDR1_MA[11]
CHB_MA10 AP18 DDR1_MA[10]/DDR1_CAB[7]/DDR1_MA[10]
CHB_MA9 AW27 DDR1_MA[9]/DDR1_CAA[1]/DDR1_MA[9]
CHB_MA8 AU26 DDR1_MA[8]/DDR1_CAA[3]/DDR1_MA[8]
CHB_MA7 AY26 DDR1_MA[7]/DDR1_CAA[4]/DDR1_MA[7]
CHB_MA6 AW26 DDR1_MA[6]/DDR1_CAA[2]/DDR1_MA[6]
CHB_MA5 AL23 DDR1_MA[5]/DDR1_CAA[0]/DDR1_MA[5]
CHB_MA4 AP23 DDR1_MA[4]
CHB_MA3 AM23 DDR1_MA[3]
CHB_MA2 AM22 DDR1_MA[2]/DDR1_CAB[5]/DDR1_MA[2]
CHB_MA1 AL22 DDR1_MA[1]/DDR1_CAB[8]/DDR1_MA[1]
CHB_MA0 AL19 DDR1_MA[0]/DDR1_CAB[9]/DDR1_MA[0]
25,26 CHB_ECC[0..7]
CHB_ECC7 AL26 DDR1_ECC[7]
CHB_ECC6 AL25 DDR1_ECC[6]
CHB_ECC5 AP25 DDR1_ECC[5]
CHB_ECC4 AP26 DDR1_ECC[4]
CHB_ECC3 AM25 DDR1_ECC[3]
CHB_ECC2 AM26 DDR1_ECC[2]
CHB_ECC1 AR26 DDR1_ECC[1]
CHB_ECC0 AR25 DDR1_ECC[0]
25,26 CHB_CK[0..3]
CHB_CK3 AP19 DDR1_CKP[3]
CHB_CK2 AN20 DDR1_CKP[2]
CHB_CK1 AP22 DDR1_CKP[1]
CHB_CK0 AM20 DDR1_CKP[0]
25,26 CHB_CK#[0..3]
CHB_CK#3 AP20 DDR1_CKN[3]
CHB_CK#2 AN21 DDR1_CKN[2]
CHB_CK#1 AP21 DDR1_CKN[1]
CHB_CK#0 AM21 DDR1_CKN[0]
25,26 CHB_CKE[0..3]
CHB_CKE3 AU29 DDR1_CKE[3]
CHB_CKE2 AW29 DDR1_CKE[2]
CHB_CKE1 AV29 DDR1_CKE[1]
CHB_CKE0 AY29 DDR1_CKE[0]
SOCKET_1151P
DDR1_CS#[3] AM15 CHB_CS#3
DDR1_CS#[2] AN17 CHB_CS#2
DDR1_CS#[1] AN15 CHB_CS#1
DDR1_CS#[0] AP17 CHB_CS#0
CHB_CS#[0..3] 25,26
DDR1_ODT[3] AL15 CHB_ODT3
DDR1_ODT[2] AP15 CHB_ODT2
DDR1_ODT[1] AL16 CHB_ODT1
DDR1_ODT[0] AM16 CHB_ODT0
CHB_ODT[0..3] 25,26
DDR1_BA[2]/DDR1_CAA[5]/DDR1_BG[0] AW28 CHB_BG0
DDR1_BA[1]/DDR1_CAB[6]/DDR1_BA[1] AM18 CHB_BA1
DDR1_BA[0]/DDR1_CAB[4]/DDR1_BA[0] AL18 CHB_BA0
CHB_BG0 25,26
CHB_BA1 25,26
CHB_BA0 25,26
DDR1_ALERT# AY25 CHB_ALT#
DDR1_CAS#/DDR1_CAB[1]/DDR1_MA[15] AP16 CHB_MA15
DDR1_RAS#/DDR1_CAB[3]/DDR1_MA[16] AN18 CHB_MA16
DDR1_WE#/DDR1_CAB[2]/DDR1_MA[14] AL17 CHB_MA14
DDR1_PAR AL20 CHB_PAR
CHB_ALT# 25,26
CHB_MA15 25,26
CHB_MA16 25,26
CHB_MA14 25,26
CHB_PAR 25,26
25,26 CHB_DQ[32..63]
U1D
CHB_DQ63 AF6 DDR1_DQ[63]
CHB_DQ62 AE7 DDR1_DQ[62]
CHB_DQ61 AH6 DDR1_DQ[61]
CHB_DQ60 AH7 DDR1_DQ[60]
CHB_DQ59 AF7 DDR1_DQ[59]
CHB_DQ58 AE6 DDR1_DQ[58]
CHB_DQ57 AJ7 DDR1_DQ[57]
CHB_DQ56 AJ6 DDR1_DQ[56]
CHB_DQ55 AL6 DDR1_DQ[55]
CHB_DQ54 AM6 DDR1_DQ[54]
CHB_DQ53 AL9 DDR1_DQ[53]
CHB_DQ52 AM9 DDR1_DQ[52]
CHB_DQ51 AL7 DDR1_DQ[51]
CHB_DQ50 AM7 DDR1_DQ[50]
CHB_DQ49 AL10 DDR1_DQ[49]
CHB_DQ48 AM10 DDR1_DQ[48]
CHB_DQ47 AP6 DDR1_DQ[47]/DDR1_DQ[31]
CHB_DQ46 AR6 DDR1_DQ[46]/DDR1_DQ[30]
CHB_DQ45 AP9 DDR1_DQ[45]/DDR1_DQ[29]
CHB_DQ44 AR9 DDR1_DQ[44]/DDR1_DQ[28]
CHB_DQ43 AP7 DDR1_DQ[43]/DDR1_DQ[27]
CHB_DQ42 AR7 DDR1_DQ[42]/DDR1_DQ[26]
CHB_DQ41 AR10 DDR1_DQ[41]/DDR1_DQ[25]
CHB_DQ40 AP10 DDR1_DQ[40]/DDR1_DQ[24]
CHB_DQ39 AL12 DDR1_DQ[39]/DDR1_DQ[23]
CHB_DQ38 AM12 DDR1_DQ[38]/DDR1_DQ[22]
CHB_DQ37 AP13 DDR1_DQ[37]/DDR1_DQ[21]
CHB_DQ36 AR13 DDR1_DQ[36]/DDR1_DQ[20]
CHB_DQ35 AL13 DDR1_DQ[35]/DDR1_DQ[19]
CHB_DQ34 AM13 DDR1_DQ[34]/DDR1_DQ[18]
CHB_DQ33 AP12 DDR1_DQ[33]/DDR1_DQ[17]
CHB_DQ32 AR12 DDR1_DQ[32]/DDR1_DQ[16]
25,26 CHB_DQS[0..3]
CHB_DQS3 AN28 DDR1_DQSP[3]/DDR0_DQSP[7]
CHB_DQS2 AP33 DDR1_DQSP[2]/DDR0_DQSP[6]
CHB_DQS1 AL33 DDR1_DQSP[1]/DDR0_DQSP[3]
CHB_DQS0 AF35 DDR1_DQSP[0]/DDR0_DQSP[2]
25,26 CHB_DQS#[0..3]
CHB_DQS#3 AN29 DDR1_DQSN[3]/DDR0_DQSN[7]
CHB_DQS#2 AN33 DDR1_DQSN[2]/DDR0_DQSN[6]
CHB_DQS#1 AK33 DDR1_DQSN[1]/DDR0_DQSN[3]
CHB_DQS#0 AF34 DDR1_DQSN[0]/DDR0_DQSN[2]
CHB_DQ[0..31] 25,26
DDR1_DQ[31]/DDR0_DQ[63] AP28 CHB_DQ31
DDR1_DQ[30]/DDR0_DQ[62] AR28 CHB_DQ30
DDR1_DQ[29]/DDR0_DQ[61] AL28 CHB_DQ29
DDR1_DQ[28]/DDR0_DQ[60] AM28 CHB_DQ28
DDR1_DQ[27]/DDR0_DQ[59] AR29 CHB_DQ27
DDR1_DQ[26]/DDR0_DQ[58] AP29 CHB_DQ26
DDR1_DQ[25]/DDR0_DQ[57] AM29 CHB_DQ25
DDR1_DQ[24]/DDR0_DQ[56] AL29 CHB_DQ24
DDR1_DQ[23]/DDR0_DQ[55] AP31 CHB_DQ23
DDR1_DQ[22]/DDR0_DQ[54] AN31 CHB_DQ22
DDR1_DQ[21]/DDR0_DQ[53] AP34 CHB_DQ21
DDR1_DQ[20]/DDR0_DQ[52] AN34 CHB_DQ20
DDR1_DQ[19]/DDR0_DQ[51] AP32 CHB_DQ19
DDR1_DQ[18]/DDR0_DQ[50] AN32 CHB_DQ18
DDR1_DQ[17]/DDR0_DQ[49] AN35 CHB_DQ17
DDR1_DQ[16]/DDR0_DQ[48] AP35 CHB_DQ16
DDR1_DQ[15]/DDR0_DQ[31] AL31 CHB_DQ15
DDR1_DQ[14]/DDR0_DQ[30] AK31 CHB_DQ14
DDR1_DQ[13]/DDR0_DQ[29] AL34 CHB_DQ13
DDR1_DQ[12]/DDR0_DQ[28] AK34 CHB_DQ12
DDR1_DQ[11]/DDR0_DQ[27] AL32 CHB_DQ11
DDR1_DQ[10]/DDR0_DQ[26] AK32 CHB_DQ10
DDR1_DQ[9]/DDR0_DQ[25] AL35 CHB_DQ9
DDR1_DQ[8]/DDR0_DQ[24] AK35 CHB_DQ8
DDR1_DQ[7]/DDR0_DQ[23] AH34 CHB_DQ7
DDR1_DQ[6]/DDR0_DQ[22] AG34 CHB_DQ6
DDR1_DQ[5]/DDR0_DQ[21] AE34 CHB_DQ5
DDR1_DQ[4]/DDR0_DQ[20] AE35 CHB_DQ4
DDR1_DQ[3]/DDR0_DQ[19] AH35 CHB_DQ3
DDR1_DQ[2]/DDR0_DQ[18] AG35 CHB_DQ2
DDR1_DQ[1]/DDR0_DQ[17] AD35 CHB_DQ1
DDR1_DQ[0]/DDR0_DQ[16] AD34 CHB_DQ0
CHB_DQS[4..8] 25,26
DDR1_DQSP[8] AN25 CHB_DQS8
DDR1_DQSP[7] AG7 CHB_DQS7
DDR1_DQSP[6] AL8 CHB_DQS6
DDR1_DQSP[5]/DDR1_DQSP[3] AP8 CHB_DQS5
DDR1_DQSP[4]/DDR1_DQSP[2] AN12 CHB_DQS4
CHB_DQS#[4..8] 25,26
DDR1_DQSN[8] AN26 CHB_DQS#8
DDR1_DQSN[7] AG6 CHB_DQS#7
DDR1_DQSN[6] AM8 CHB_DQS#6
DDR1_DQSN[5]/DDR1_DQSN[3] AR8 CHB_DQS#5
DDR1_DQSN[4]/DDR1_DQSN[2] AN13 CHB_DQS#4
SOCKET_1151P

<Variant Name>

PEGATRON **Title : 015 CPU CHB**

PEGATRON PROPRIETARY AND CONFIDENTIAL

PEGATRON CORPORATION **Engineer:** *Ryan2_Wang*

Size	Project Name	Rev
A3	CLCL-N	1.00

Date: Tuesday, November 27, 2018 Sheet 15 of 110

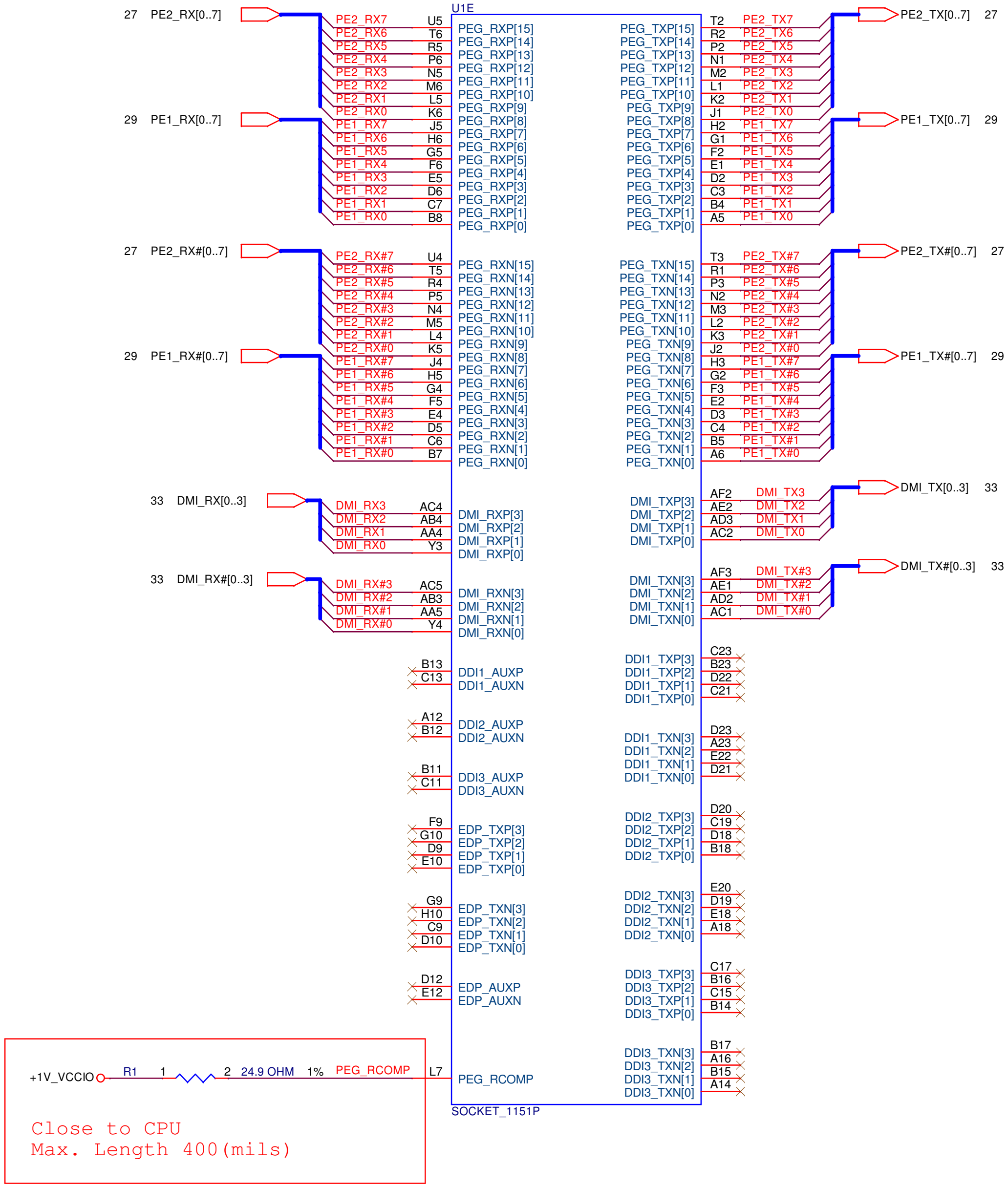
U1E
SOCKET_1151P
27 PE2_RX[0..7]
29 PE1_RX[0..7]
27 PE2_RX#[0..7]
29 PE1_RX#[0..7]
33 DMI_RX[0..3]
33 DMI_RX#[0..3]
PE2_TX[0..7] 27
PE1_TX[0..7] 29
PE2_TX#[0..7] 27
PE1_TX#[0..7] 29
DMI_TX[0..3] 33
DMI_TX#[0..3] 33
PE2_RX7 U5 PEG_RXP[15]
PE2_RX6 T6 PEG_RXP[14]
PE2_RX5 R5 PEG_RXP[13]
PE2_RX4 P6 PEG_RXP[12]
PE2_RX3 N5 PEG_RXP[11]
PE2_RX2 M6 PEG_RXP[10]
PE2_RX1 L5 PEG_RXP[9]
PE2_RX0 K6 PEG_RXP[8]
PE1_RX7 J5 PEG_RXP[7]
PE1_RX6 H6 PEG_RXP[6]
PE1_RX5 G5 PEG_RXP[5]
PE1_RX4 F6 PEG_RXP[4]
PE1_RX3 E5 PEG_RXP[3]
PE1_RX2 D6 PEG_RXP[2]
PE1_RX1 C7 PEG_RXP[1]
PE1_RX0 B8 PEG_RXP[0]
PE2_RX#7 U4 PEG_RXN[15]
PE2_RX#6 T5 PEG_RXN[14]
PE2_RX#5 R4 PEG_RXN[13]
PE2_RX#4 P5 PEG_RXN[12]
PE2_RX#3 N4 PEG_RXN[11]
PE2_RX#2 M5 PEG_RXN[10]
PE2_RX#1 L4 PEG_RXN[9]
PE2_RX#0 K5 PEG_RXN[8]
PE1_RX#7 J4 PEG_RXN[7]
PE1_RX#6 H5 PEG_RXN[6]
PE1_RX#5 G4 PEG_RXN[5]
PE1_RX#4 F5 PEG_RXN[4]
PE1_RX#3 E4 PEG_RXN[3]
PE1_RX#2 D5 PEG_RXN[2]
PE1_RX#1 C6 PEG_RXN[1]
PE1_RX#0 B7 PEG_RXN[0]
DMI_RX3 AC4 DMI_RXP[3]
DMI_RX2 AB4 DMI_RXP[2]
DMI_RX1 AA4 DMI_RXP[1]
DMI_RX0 Y3 DMI_RXP[0]
DMI_RX#3 AC5 DMI_RXN[3]
DMI_RX#2 AB3 DMI_RXN[2]
DMI_RX#1 AA5 DMI_RXN[1]
DMI_RX#0 Y4 DMI_RXN[0]
B13 DDI1_AUXP
C13 DDI1_AUXN
A12 DDI2_AUXP
B12 DDI2_AUXN
B11 DDI3_AUXP
C11 DDI3_AUXN
F9 EDP_TXP[3]
G10 EDP_TXP[2]
D9 EDP_TXP[1]
E10 EDP_TXP[0]
G9 EDP_TXN[3]
H10 EDP_TXN[2]
C9 EDP_TXN[1]
D10 EDP_TXN[0]
D12 EDP_AUXP
E12 EDP_AUXN
PEG_TXP[15] T2 PE2_TX7
PEG_TXP[14] R2 PE2_TX6
PEG_TXP[13] P2 PE2_TX5
PEG_TXP[12] N1 PE2_TX4
PEG_TXP[11] M2 PE2_TX3
PEG_TXP[10] L1 PE2_TX2
PEG_TXP[9] K2 PE2_TX1
PEG_TXP[8] J1 PE2_TX0
PEG_TXP[7] H2 PE1_TX7
PEG_TXP[6] G1 PE1_TX6
PEG_TXP[5] F2 PE1_TX5
PEG_TXP[4] E1 PE1_TX4
PEG_TXP[3] D2 PE1_TX3
PEG_TXP[2] C3 PE1_TX2
PEG_TXP[1] B4 PE1_TX1
PEG_TXP[0] A5 PE1_TX0
PEG_TXN[15] T3 PE2_TX#7
PEG_TXN[14] R1 PE2_TX#6
PEG_TXN[13] P3 PE2_TX#5
PEG_TXN[12] N2 PE2_TX#4
PEG_TXN[11] M3 PE2_TX#3
PEG_TXN[10] L2 PE2_TX#2
PEG_TXN[9] K3 PE2_TX#1
PEG_TXN[8] J2 PE2_TX#0
PEG_TXN[7] H3 PE1_TX#7
PEG_TXN[6] G2 PE1_TX#6
PEG_TXN[5] F3 PE1_TX#5
PEG_TXN[4] E2 PE1_TX#4
PEG_TXN[3] D3 PE1_TX#3
PEG_TXN[2] C4 PE1_TX#2
PEG_TXN[1] B5 PE1_TX#1
PEG_TXN[0] A6 PE1_TX#0
DMI_TXP[3] AF2 DMI_TX3
DMI_TXP[2] AE2 DMI_TX2
DMI_TXP[1] AD3 DMI_TX1
DMI_TXP[0] AC2 DMI_TX0
DMI_TXN[3] AF3 DMI_TX#3
DMI_TXN[2] AE1 DMI_TX#2
DMI_TXN[1] AD2 DMI_TX#1
DMI_TXN[0] AC1 DMI_TX#0
DDI1_TXP[3] C23
DDI1_TXP[2] B23
DDI1_TXP[1] D22
DDI1_TXP[0] C21
DDI1_TXN[3] D23
DDI1_TXN[2] A23
DDI1_TXN[1] E22
DDI1_TXN[0] D21
DDI2_TXP[3] D20
DDI2_TXP[2] C19
DDI2_TXP[1] D18
DDI2_TXP[0] B18
DDI2_TXN[3] E20
DDI2_TXN[2] D19
DDI2_TXN[1] E18
DDI2_TXN[0] A18
DDI3_TXP[3] C17
DDI3_TXP[2] B16
DDI3_TXP[1] C15
DDI3_TXP[0] B14
DDI3_TXN[3] B17
DDI3_TXN[2] A16
DDI3_TXN[1] B15
DDI3_TXN[0] A14
+1V_VCCIO
R1
1
2
24.9 OHM
1%
PEG_RCOMP
L7 PEG_RCOMP
Close to CPU
Max. Length 400(mils)

<Variant Name>

PEGATRON **Title : 016 CPU PCIE**

PEGATRON PROPRIETARY AND CONFIDENTIAL

PEGATRON CORPORATION **Engineer:** ***Ryan2_Wang***

Size	Project Name	Rev
A3	CLCL-N	1.00

Date: Tuesday, November 27, 2018 Sheet 16 of 110

PINS DEFINITION OF CPU NEED TO BE VERIFIED

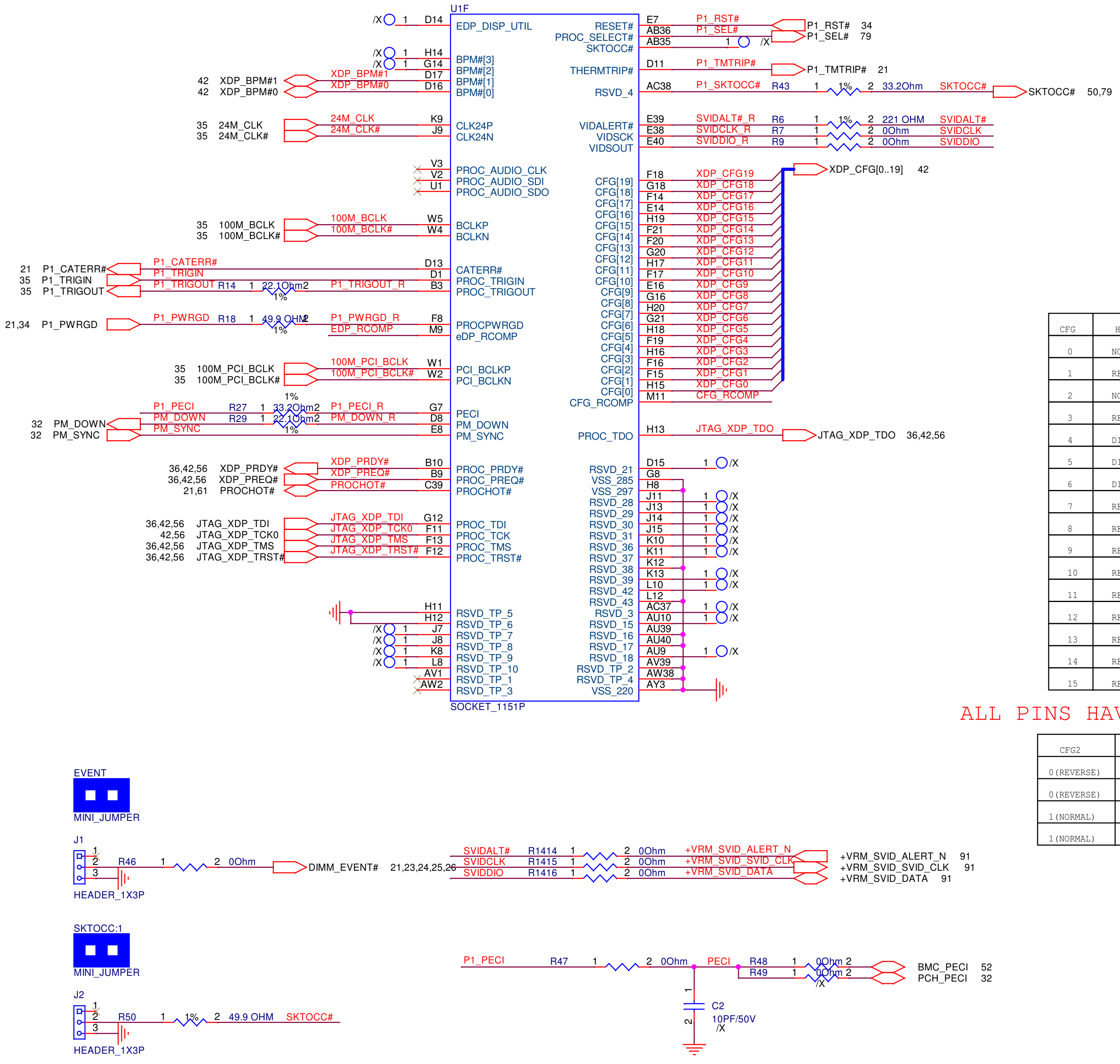
U1F
/X 1 D14 EDP_DISP_UTIL
/X 1 H14 BPM#[3]
/X 1 G14 BPM#[2]
42 XDP_BPM#1 XDP_BPM#1 D17 BPM#[1]
42 XDP_BPM#0 XDP_BPM#0 D16 BPM#[0]
35 24M_CLK 24M_CLK K9 CLK24P
35 24M_CLK# 24M_CLK# J9 CLK24N
V3 PROC_AUDIO_CLK
V2 PROC_AUDIO_SDI
U1 PROC_AUDIO_SDO
35 100M_BCLK 100M_BCLK W5 BCLKP
35 100M_BCLK# 100M_BCLK# W4 BCLKN
21 P1_CATERR# P1_CATERR# D13 CATERR#
35 P1_TRIGIN P1_TRIGIN D1 PROC_TRIGIN
35 P1_TRIGOUT P1_TRIGOUT R14 1 22.1Ohm 2 1% P1_TRIGOUT_R B3 PROC_TRIGOUT
21,34 P1_PWRGD P1_PWRGD R18 1 49.9 OHM 2 1% P1_PWRGD_R F8 PROCPWRGD
EDP_RCOMP M9 eDP_RCOMP
35 100M_PCI_BCLK 100M_PCI_BCLK W1 PCI_BCLKP
35 100M_PCI_BCLK# 100M_PCI_BCLK# W2 PCI_BCLKN
P1_PECI R27 1 33.2Ohm 2 1% P1_PECI_R G7 PECI
32 PM_DOWN PM_DOWN R29 1 22.1Ohm 2 1% PM_DOWN_R D8 PM_DOWN
32 PM_SYNC PM_SYNC E8 PM_SYNC
36,42,56 XDP_PRDY# XDP_PRDY# B10 PROC_PRDY#
36,42,56 XDP_PREQ# XDP_PREQ# B9 PROC_PREQ#
21,61 PROCHOT# PROCHOT# C39 PROCHOT#
36,42,56 JTAG_XDP_TDI JTAG_XDP_TDI G12 PROC_TDI
42,56 JTAG_XDP_TCK0 JTAG_XDP_TCK0 F11 PROC_TCK
36,42,56 JTAG_XDP_TMS JTAG_XDP_TMS F13 PROC_TMS
36,42,56 JTAG_XDP_TRST# JTAG_XDP_TRST# F12 PROC_TRST#
H11 RSVD_TP_5
H12 RSVD_TP_6
/X 1 J7 RSVD_TP_7
/X 1 J8 RSVD_TP_8
/X 1 K8 RSVD_TP_9
/X 1 L8 RSVD_TP_10
AV1 RSVD_TP_1
AW2 RSVD_TP_3
SOCKET_1151P
RESET# E7 P1_RST# P1_RST# 34
PROC_SELECT# AB36 P1_SEL# P1_SEL# 79
SKTOCC# AB35 1 /X
THERMTRIP# D11 P1_TMTRIP# P1_TMTRIP# 21
RSVD_4 AC38 P1_SKTOCC# R43 1 1% 2 33.2Ohm SKTOCC# SKTOCC# 50,79
VIDALERT# E39 SVIDALT#_R R6 1 1% 2 221 OHM SVIDALT#
VIDSCK E38 SVIDCLK_R R7 1 2 0Ohm SVIDCLK
VIDSOUT E40 SVIDDIO_R R9 1 2 0Ohm SVIDDIO
XDP_CFG[0..19] 42
CFG[19] F18 XDP_CFG19
CFG[18] G18 XDP_CFG18
CFG[17] F14 XDP_CFG17
CFG[16] E14 XDP_CFG16
CFG[15] H19 XDP_CFG15
CFG[14] F21 XDP_CFG14
CFG[13] F20 XDP_CFG13
CFG[12] G20 XDP_CFG12
CFG[11] H17 XDP_CFG11
CFG[10] F17 XDP_CFG10
CFG[9] E16 XDP_CFG9
CFG[8] G16 XDP_CFG8
CFG[7] H20 XDP_CFG7
CFG[6] G21 XDP_CFG6
CFG[5] H18 XDP_CFG5
CFG[4] F19 XDP_CFG4
CFG[3] H16 XDP_CFG3
CFG[2] F16 XDP_CFG2
CFG[1] F15 XDP_CFG1
CFG[0] H15 XDP_CFG0
CFG_RCOMP M11 CFG_RCOMP
PROC_TDO H13 JTAG_XDP_TDO JTAG_XDP_TDO 36,42,56
RSVD_21 D15 1 /X
VSS_285 G8
VSS_297 H8
RSVD_28 J11 1 /X
RSVD_29 J13 1 /X
RSVD_30 J14 1 /X
RSVD_31 J15 1 /X
RSVD_36 K10 1 /X
RSVD_37 K11 1 /X
RSVD_38 K12
RSVD_39 K13 1 /X
RSVD_42 L10 1 /X
RSVD_43 L12
RSVD_3 AC37 1 /X
RSVD_15 AU10 1 /X
RSVD_16 AU39
RSVD_17 AU40
RSVD_18 AU9 1 /X
RSVD_TP_2 AV39
RSVD_TP_4 AW38
VSS_220 AY3
EVENT
MINI_JUMPER
J1
1 2 3
R46 1 2 0Ohm
DIMM_EVENT# 21,23,24,25,26
HEADER_1X3P
SVIDALT# R1414 1 2 0Ohm +VRM_SVID_ALERT_N
SVIDCLK R1415 1 2 0Ohm +VRM_SVID_SVID_CLK
SVIDDIO R1416 1 2 0Ohm +VRM_SVID_DATA
+VRM_SVID_ALERT_N 91
+VRM_SVID_SVID_CLK 91
+VRM_SVID_DATA 91
SKTOCC:1
MINI_JUMPER
J2
1 2 3
R50 1 1% 2 49.9 OHM SKTOCC#
HEADER_1X3P
P1_PECI R47 1 2 0Ohm PECI
R48 1 0Ohm 2
R49 1 0Ohm 2 /X
BMC_PECI 52
PCH_PECI 32
1 C2 2
10PF/50V
/X

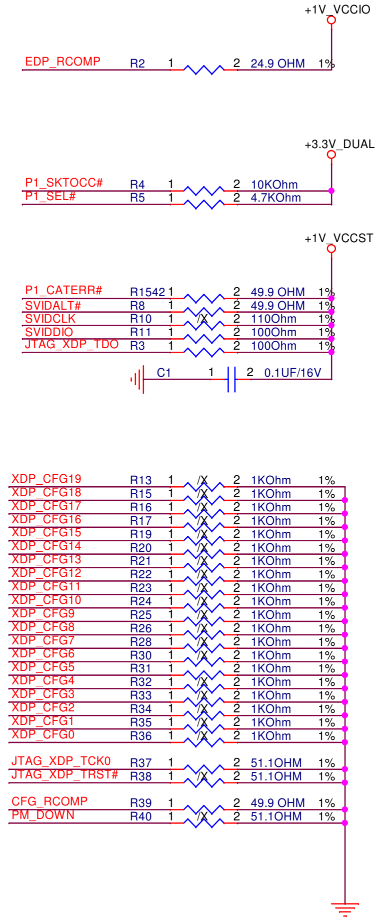
+1V_VCCIO
EDP_RCOMP R2 1 2 24.9 OHM 1%
+3.3V_DUAL
P1_SKTOCC# R4 1 2 10KOhm
P1_SEL# R5 1 2 4.7KOhm
+1V_VCCST
P1_CATERR# R1542 1 2 49.9 OHM 1%
SVIDALT# R8 1 2 49.9 OHM 1%
SVIDCLK R10 1 /X 2 110Ohm 1%
SVIDDIO R11 1 2 100Ohm 1%
JTAG_XDP_TDO R3 1 2 100Ohm 1%
C1 1 2 0.1UF/16V
XDP_CFG19 R13 1 /X 2 1KOhm 1%
XDP_CFG18 R15 1 /X 2 1KOhm 1%
XDP_CFG17 R16 1 /X 2 1KOhm 1%
XDP_CFG16 R17 1 /X 2 1KOhm 1%
XDP_CFG15 R19 1 /X 2 1KOhm 1%
XDP_CFG14 R20 1 /X 2 1KOhm 1%
XDP_CFG13 R21 1 /X 2 1KOhm 1%
XDP_CFG12 R22 1 /X 2 1KOhm 1%
XDP_CFG11 R23 1 /X 2 1KOhm 1%
XDP_CFG10 R24 1 /X 2 1KOhm 1%
XDP_CFG9 R25 1 /X 2 1KOhm 1%
XDP_CFG8 R26 1 /X 2 1KOhm 1%
XDP_CFG7 R28 1 /X 2 1KOhm 1%
XDP_CFG6 R30 1 /X 2 1KOhm 1%
XDP_CFG5 R31 1 2 1KOhm 1%
XDP_CFG4 R32 1 /X 2 1KOhm 1%
XDP_CFG3 R33 1 /X 2 1KOhm 1%
XDP_CFG2 R34 1 /X 2 1KOhm 1%
XDP_CFG1 R35 1 /X 2 1KOhm 1%
XDP_CFG0 R36 1 /X 2 1KOhm 1%
JTAG_XDP_TCK0 R37 1 2 51.1OHM 1%
JTAG_XDP_TRST# R38 1 /X 2 51.1OHM 1%
CFG_RCOMP R39 1 2 49.9 OHM 1%
PM_DOWN R40 1 /X 2 51.1OHM 1%

CFG	HIGH	LOW	STRAP DESCRIPTION
0	NORMAL	STALL	EAR
1	RESERVED		
2	NORMAL	REVERSE	PEG_LANE_REVERSAL
3	RESERVED		
4	DISABLE	ENABLE	DP PRESENCE
5	DISABLE	ENABLE	PEG0CFGSEL[0]
6	DISABLE	ENABLE	PEG0CFGSEL[1]
7	RESET_N	BIOS REQ	PEG_DEFER_TRAINING
8	RESERVED		
9	RESERVED		
10	RESERVED		
11	RESERVED		
12	RESERVED		
13	RESERVED		
14	RESERVED		
15	RESERVED		

ALL PINS HAVE INTERNAL PULL-UPS

CFG2	CFG6	CFG5	PCI-E CONFIG
0(REVERSE)	0	0	X8 X4 X4 (DEFUALT)
0(REVERSE)	0	1	RESERVED
1(NORMAL)	1	0	X8 X8
1(NORMAL)	1	1	X16

<Variant Name>

PEGATRON Title : 017 CPU MISC

PEGATRON PROPRIETARY AND CONFIDENTIAL

PEGATRON CORPORATION Engineer: Ryan2_Wang

Size	Project Name	Rev
A3	CLCL-N	1.00

Date: Tuesday, November 27, 2018 Sheet 17 of 110

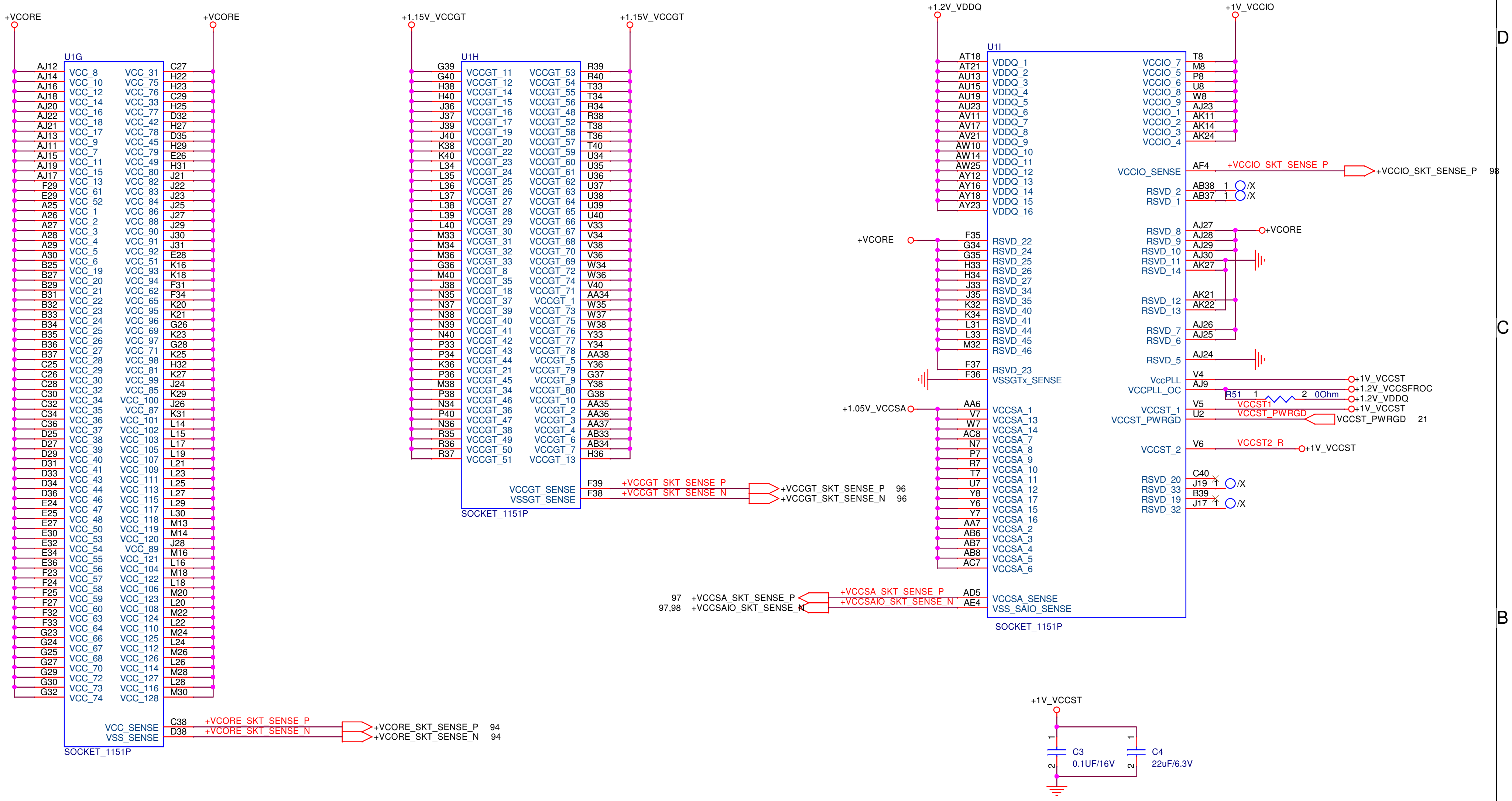
+VCORE
+VCORE
U1G
AJ12 VCC_8
AJ14 VCC_10
AJ16 VCC_12
AJ18 VCC_14
AJ20 VCC_16
AJ22 VCC_18
AJ21 VCC_17
AJ13 VCC_9
AJ11 VCC_7
AJ15 VCC_11
AJ19 VCC_15
AJ17 VCC_13
F29 VCC_61
E29 VCC_52
A25 VCC_1
A26 VCC_2
A27 VCC_3
A28 VCC_4
A29 VCC_5
A30 VCC_6
B25 VCC_19
B27 VCC_20
B29 VCC_21
B31 VCC_22
B32 VCC_23
B33 VCC_24
B34 VCC_25
B35 VCC_26
B36 VCC_27
B37 VCC_28
C25 VCC_29
C26 VCC_30
C28 VCC_32
C30 VCC_34
C32 VCC_35
C34 VCC_36
C36 VCC_37
D25 VCC_38
D27 VCC_39
D29 VCC_40
D31 VCC_41
D33 VCC_43
D34 VCC_44
D36 VCC_46
E24 VCC_47
E25 VCC_48
E27 VCC_50
E30 VCC_53
E32 VCC_54
E34 VCC_55
E36 VCC_56
F23 VCC_57
F24 VCC_58
F25 VCC_59
F27 VCC_60
F32 VCC_63
F33 VCC_64
G23 VCC_66
G24 VCC_67
G25 VCC_68
G27 VCC_70
G29 VCC_72
G30 VCC_73
G32 VCC_74
VCC_31 C27
VCC_75 H22
VCC_76 H23
VCC_33 C29
VCC_77 H25
VCC_42 D32
VCC_78 H27
VCC_45 D35
VCC_79 H29
VCC_49 E26
VCC_80 H31
VCC_82 J21
VCC_83 J22
VCC_84 J23
VCC_86 J25
VCC_88 J27
VCC_90 J29
VCC_91 J30
VCC_92 J31
VCC_51 E28
VCC_93 K16
VCC_94 K18
VCC_62 F31
VCC_65 F34
VCC_95 K20
VCC_96 K21
VCC_69 G26
VCC_97 K23
VCC_71 G28
VCC_98 K25
VCC_81 H32
VCC_99 K27
VCC_85 J24
VCC_100 K29
VCC_87 J26
VCC_101 K31
VCC_102 L14
VCC_103 L15
VCC_105 L17
VCC_107 L19
VCC_109 L21
VCC_111 L23
VCC_113 L25
VCC_115 L27
VCC_117 L29
VCC_118 L30
VCC_119 M13
VCC_120 M14
VCC_89 J28
VCC_121 M16
VCC_104 L16
VCC_122 M18
VCC_106 L18
VCC_123 M20
VCC_108 L20
VCC_124 M22
VCC_110 L22
VCC_125 M24
VCC_112 L24
VCC_126 M26
VCC_114 L26
VCC_127 M28
VCC_116 L28
VCC_128 M30
VCC_SENSE C38 +VCORE_SKT_SENSE_P
VSS_SENSE D38 +VCORE_SKT_SENSE_N
+VCORE_SKT_SENSE_P 94
+VCORE_SKT_SENSE_N 94
SOCKET_1151P
+1.15V_VCCGT
+1.15V_VCCGT
U1H
G39 VCCGT_11
G40 VCCGT_12
H38 VCCGT_14
H40 VCCGT_15
J36 VCCGT_16
J37 VCCGT_17
J39 VCCGT_19
J40 VCCGT_20
K38 VCCGT_22
K40 VCCGT_23
L34 VCCGT_24
L35 VCCGT_25
L36 VCCGT_26
L37 VCCGT_27
L38 VCCGT_28
L39 VCCGT_29
L40 VCCGT_30
M33 VCCGT_31
M34 VCCGT_32
M36 VCCGT_33
G36 VCCGT_8
M40 VCCGT_35
J38 VCCGT_18
N35 VCCGT_37
N37 VCCGT_39
N38 VCCGT_40
N39 VCCGT_41
N40 VCCGT_42
P33 VCCGT_43
P34 VCCGT_44
K36 VCCGT_21
P36 VCCGT_45
M38 VCCGT_34
P38 VCCGT_46
N34 VCCGT_36
P40 VCCGT_47
N36 VCCGT_38
R35 VCCGT_49
R36 VCCGT_50
R37 VCCGT_51
VCCGT_53 R39
VCCGT_54 R40
VCCGT_55 T33
VCCGT_56 T34
VCCGT_48 R34
VCCGT_52 R38
VCCGT_58 T36
VCCGT_57 T38
VCCGT_59 T40
VCCGT_60 U34
VCCGT_61 U35
VCCGT_62 U36
VCCGT_63 U37
VCCGT_64 U38
VCCGT_65 U39
VCCGT_66 U40
VCCGT_67 V33
VCCGT_68 V34
VCCGT_70 V38
VCCGT_69 V36
VCCGT_72 W34
VCCGT_74 W36
VCCGT_71 V40
VCCGT_1 AA34
VCCGT_73 W35
VCCGT_75 W37
VCCGT_76 W38
VCCGT_77 Y33
VCCGT_78 Y34
VCCGT_5 AA38
VCCGT_79 Y36
VCCGT_9 G37
VCCGT_80 Y38
VCCGT_10 G38
VCCGT_2 AA35
VCCGT_3 AA36
VCCGT_4 AA37
VCCGT_6 AB33
VCCGT_7 AB34
VCCGT_13 H36
VCCGT_SENSE F39 +VCCGT_SKT_SENSE_P
VSSGT_SENSE F38 +VCCGT_SKT_SENSE_N
+VCCGT_SKT_SENSE_P 96
+VCCGT_SKT_SENSE_N 96
SOCKET_1151P
+1.2V_VDDQ
+1V_VCCIO
U1I
AT18 VDDQ_1
AT21 VDDQ_2
AU13 VDDQ_3
AU15 VDDQ_4
AU19 VDDQ_5
AU23 VDDQ_6
AV11 VDDQ_7
AV17 VDDQ_8
AV21 VDDQ_9
AW10 VDDQ_10
AW14 VDDQ_11
AW25 VDDQ_12
AY12 VDDQ_13
AY16 VDDQ_14
AY18 VDDQ_15
AY23 VDDQ_16
+VCORE
F35 RSVD_22
G34 RSVD_24
G35 RSVD_25
H33 RSVD_26
H34 RSVD_27
J33 RSVD_34
J35 RSVD_35
K32 RSVD_40
K34 RSVD_41
L31 RSVD_44
L33 RSVD_45
M32 RSVD_46
F37 RSVD_23
F36 VSSGTx_SENSE
+1.05V_VCCSA
AA6 VCCSA_1
V7 VCCSA_13
W7 VCCSA_14
AC8 VCCSA_7
N7 VCCSA_8
P7 VCCSA_9
R7 VCCSA_10
T7 VCCSA_11
U7 VCCSA_12
Y8 VCCSA_17
Y6 VCCSA_15
Y7 VCCSA_16
AA7 VCCSA_2
AB6 VCCSA_3
AB7 VCCSA_4
AB8 VCCSA_5
AC7 VCCSA_6
AD5 VCCSA_SENSE +VCCSA_SKT_SENSE_P
AE4 VSS_SAIO_SENSE +VCCSAIO_SKT_SENSE_N
97 +VCCSA_SKT_SENSE_P
97,98 +VCCSAIO_SKT_SENSE_N
VCCIO_7 T8
VCCIO_5 M8
VCCIO_6 P8
VCCIO_8 U8
VCCIO_9 W8
VCCIO_1 AJ23
VCCIO_2 AK11
VCCIO_3 AK14
VCCIO_4 AK24
VCCIO_SENSE AF4 +VCCIO_SKT_SENSE_P
+VCCIO_SKT_SENSE_P 98
RSVD_2 AB38 1 /X
RSVD_1 AB37 1 /X
RSVD_8 AJ27 +VCORE
RSVD_9 AJ28
RSVD_10 AJ29
RSVD_11 AJ30
RSVD_14 AK27
RSVD_12 AK21
RSVD_13 AK22
RSVD_7 AJ26
RSVD_6 AJ25
RSVD_5 AJ24
VccPLL V4 +1V_VCCST
VCCPLL_OC AJ9 +1.2V_VCCSFROC
R51 1 2 0Ohm +1.2V_VDDQ
VCCST_1 V5 VCCST1 +1V_VCCST
VCCST_PWRGD U2 VCCST_PWRGD
VCCST_PWRGD 21
VCCST_2 V6 VCCST2_R +1V_VCCST
RSVD_20 C40
RSVD_33 J19 1 /X
RSVD_19 B39
RSVD_32 J17 1 /X
SOCKET_1151P
+1V_VCCST
1
C3
2
0.1UF/16V
1
C4
2
22uF/6.3V

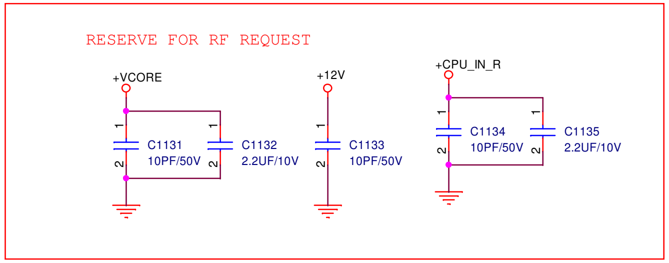
RESERVE FOR RF REQUEST
+VCORE
1
C1131
2
10PF/50V
1
C1132
2
2.2UF/10V
+12V
1
C1133
2
10PF/50V
+CPU_IN_R
1
C1134
2
10PF/50V
1
C1135
2
2.2UF/10V

<Variant Name>

PEGATRON **Title : 018 CPU POWER**

PEGATRON PROPRIETARY AND CONFIDENTIAL

PEGATRON CORPORATION **Engineer:** *Ryan2_Wang*

Size	Project Name	Rev
A3	CLCL-N	1.00

Date: Tuesday, November 27, 2018 Sheet 18 of 110

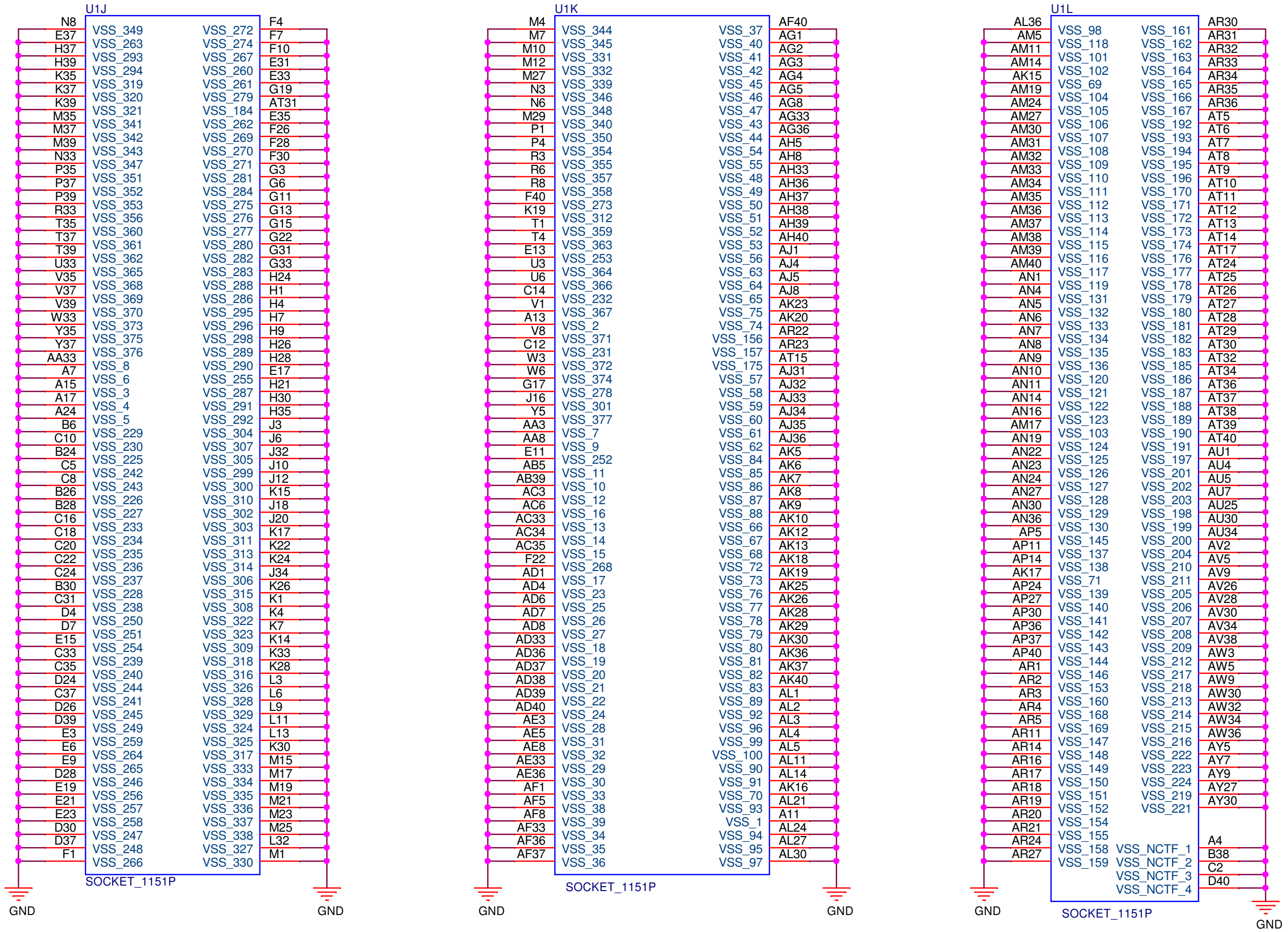
U1J
N8 VSS_349
E37 VSS_263
H37 VSS_293
H39 VSS_294
K35 VSS_319
K37 VSS_320
K39 VSS_321
M35 VSS_341
M37 VSS_342
M39 VSS_343
N33 VSS_347
P35 VSS_351
P37 VSS_352
P39 VSS_353
R33 VSS_356
T35 VSS_360
T37 VSS_361
T39 VSS_362
U33 VSS_365
V35 VSS_368
V37 VSS_369
V39 VSS_370
W33 VSS_373
Y35 VSS_375
Y37 VSS_376
AA33 VSS_8
A7 VSS_6
A15 VSS_3
A17 VSS_4
A24 VSS_5
B6 VSS_229
C10 VSS_230
B24 VSS_225
C5 VSS_242
C8 VSS_243
B26 VSS_226
B28 VSS_227
C16 VSS_233
C18 VSS_234
C20 VSS_235
C22 VSS_236
C24 VSS_237
B30 VSS_228
C31 VSS_238
D4 VSS_250
D7 VSS_251
E15 VSS_254
C33 VSS_239
C35 VSS_240
D24 VSS_244
C37 VSS_241
D26 VSS_245
D39 VSS_249
E3 VSS_259
E6 VSS_264
E9 VSS_265
D28 VSS_246
E19 VSS_256
E21 VSS_257
E23 VSS_258
D30 VSS_247
D37 VSS_248
F1 VSS_266
VSS_272 F4
VSS_274 F7
VSS_267 F10
VSS_260 E31
VSS_261 E33
VSS_279 G19
VSS_184 AT31
VSS_262 E35
VSS_269 F26
VSS_270 F28
VSS_271 F30
VSS_281 G3
VSS_284 G6
VSS_275 G11
VSS_276 G13
VSS_277 G15
VSS_280 G22
VSS_282 G31
VSS_283 G33
VSS_288 H24
VSS_286 H1
VSS_295 H4
VSS_296 H7
VSS_298 H9
VSS_289 H26
VSS_290 H28
VSS_255 E17
VSS_287 H21
VSS_291 H30
VSS_292 H35
VSS_304 J3
VSS_307 J6
VSS_305 J32
VSS_299 J10
VSS_300 J12
VSS_310 K15
VSS_302 J18
VSS_303 J20
VSS_311 K17
VSS_313 K22
VSS_314 K24
VSS_306 J34
VSS_315 K26
VSS_308 K1
VSS_322 K4
VSS_323 K7
VSS_309 K14
VSS_318 K33
VSS_316 K28
VSS_326 L3
VSS_328 L6
VSS_329 L9
VSS_324 L11
VSS_325 L13
VSS_317 K30
VSS_333 M15
VSS_334 M17
VSS_335 M19
VSS_336 M21
VSS_337 M23
VSS_338 M25
VSS_327 L32
VSS_330 M1
SOCKET_1151P
GND
GND
U1K
M4 VSS_344
M7 VSS_345
M10 VSS_331
M12 VSS_332
M27 VSS_339
N3 VSS_346
N6 VSS_348
M29 VSS_340
P1 VSS_350
P4 VSS_354
R3 VSS_355
R6 VSS_357
R8 VSS_358
F40 VSS_273
K19 VSS_312
T1 VSS_359
T4 VSS_363
E13 VSS_253
U3 VSS_364
U6 VSS_366
C14 VSS_232
V1 VSS_367
A13 VSS_2
V8 VSS_371
C12 VSS_231
W3 VSS_372
W6 VSS_374
G17 VSS_278
J16 VSS_301
Y5 VSS_377
AA3 VSS_7
AA8 VSS_9
E11 VSS_252
AB5 VSS_11
AB39 VSS_10
AC3 VSS_12
AC6 VSS_16
AC33 VSS_13
AC34 VSS_14
AC35 VSS_15
F22 VSS_268
AD1 VSS_17
AD4 VSS_23
AD6 VSS_25
AD7 VSS_26
AD8 VSS_27
AD33 VSS_18
AD36 VSS_19
AD37 VSS_20
AD38 VSS_21
AD39 VSS_22
AD40 VSS_24
AE3 VSS_28
AE5 VSS_31
AE8 VSS_32
AE33 VSS_29
AE36 VSS_30
AF1 VSS_33
AF5 VSS_38
AF8 VSS_39
AF33 VSS_34
AF36 VSS_35
AF37 VSS_36
VSS_37 AF40
VSS_40 AG1
VSS_41 AG2
VSS_42 AG3
VSS_45 AG4
VSS_46 AG5
VSS_47 AG8
VSS_43 AG33
VSS_44 AG36
VSS_54 AH5
VSS_55 AH8
VSS_48 AH33
VSS_49 AH36
VSS_50 AH37
VSS_51 AH38
VSS_52 AH39
VSS_53 AH40
VSS_56 AJ1
VSS_63 AJ4
VSS_64 AJ5
VSS_65 AJ8
VSS_75 AK23
VSS_74 AK20
VSS_156 AR22
VSS_157 AR23
VSS_175 AT15
VSS_57 AJ31
VSS_58 AJ32
VSS_59 AJ33
VSS_60 AJ34
VSS_61 AJ35
VSS_62 AJ36
VSS_84 AK5
VSS_85 AK6
VSS_86 AK7
VSS_87 AK8
VSS_88 AK9
VSS_66 AK10
VSS_67 AK12
VSS_68 AK13
VSS_72 AK18
VSS_73 AK19
VSS_76 AK25
VSS_77 AK26
VSS_78 AK28
VSS_79 AK29
VSS_80 AK30
VSS_81 AK36
VSS_82 AK37
VSS_83 AK40
VSS_89 AL1
VSS_92 AL2
VSS_96 AL3
VSS_99 AL4
VSS_100 AL5
VSS_90 AL11
VSS_91 AL14
VSS_70 AK16
VSS_93 AL21
VSS_1 A11
VSS_94 AL24
VSS_95 AL27
VSS_97 AL30
SOCKET_1151P
GND
GND
U1L
AL36 VSS_98
AM5 VSS_118
AM11 VSS_101
AM14 VSS_102
AK15 VSS_69
AM19 VSS_104
AM24 VSS_105
AM27 VSS_106
AM30 VSS_107
AM31 VSS_108
AM32 VSS_109
AM33 VSS_110
AM34 VSS_111
AM35 VSS_112
AM36 VSS_113
AM37 VSS_114
AM38 VSS_115
AM39 VSS_116
AM40 VSS_117
AN1 VSS_119
AN4 VSS_131
AN5 VSS_132
AN6 VSS_133
AN7 VSS_134
AN8 VSS_135
AN9 VSS_136
AN10 VSS_120
AN11 VSS_121
AN14 VSS_122
AN16 VSS_123
AM17 VSS_103
AN19 VSS_124
AN22 VSS_125
AN23 VSS_126
AN24 VSS_127
AN27 VSS_128
AN30 VSS_129
AN36 VSS_130
AP5 VSS_145
AP11 VSS_137
AP14 VSS_138
AK17 VSS_71
AP24 VSS_139
AP27 VSS_140
AP30 VSS_141
AP36 VSS_142
AP37 VSS_143
AP40 VSS_144
AR1 VSS_146
AR2 VSS_153
AR3 VSS_160
AR4 VSS_168
AR5 VSS_169
AR11 VSS_147
AR14 VSS_148
AR16 VSS_149
AR17 VSS_150
AR18 VSS_151
AR19 VSS_152
AR20 VSS_154
AR21 VSS_155
AR24 VSS_158
AR27 VSS_159
VSS_161 AR30
VSS_162 AR31
VSS_163 AR32
VSS_164 AR33
VSS_165 AR34
VSS_166 AR35
VSS_167 AR36
VSS_192 AT5
VSS_193 AT6
VSS_194 AT7
VSS_195 AT8
VSS_196 AT9
VSS_170 AT10
VSS_171 AT11
VSS_172 AT12
VSS_173 AT13
VSS_174 AT14
VSS_176 AT17
VSS_177 AT24
VSS_178 AT25
VSS_179 AT26
VSS_180 AT27
VSS_181 AT28
VSS_182 AT29
VSS_183 AT30
VSS_185 AT32
VSS_186 AT34
VSS_187 AT36
VSS_188 AT37
VSS_189 AT38
VSS_190 AT39
VSS_191 AT40
VSS_197 AU1
VSS_201 AU4
VSS_202 AU5
VSS_203 AU7
VSS_198 AU25
VSS_199 AU30
VSS_200 AU34
VSS_204 AV2
VSS_210 AV5
VSS_211 AV9
VSS_205 AV26
VSS_206 AV28
VSS_207 AV30
VSS_208 AV34
VSS_209 AV38
VSS_212 AW3
VSS_217 AW5
VSS_218 AW9
VSS_213 AW30
VSS_214 AW32
VSS_215 AW34
VSS_216 AW36
VSS_222 AY5
VSS_223 AY7
VSS_224 AY9
VSS_219 AY27
VSS_221 AY30
VSS_NCTF_1 A4
VSS_NCTF_2 B38
VSS_NCTF_3 C2
VSS_NCTF_4 D40
SOCKET_1151P
GND
GND

<Variant Name>

PEGATRON **Title :** 019 CPU GND
PEGATRON PROPRIETARY AND CONFIDENTIAL
PEGATRON CORPORATION **Engineer:** *Ryan2_Wang*

Size	Project Name	Rev
A3	CLCL-N	1.00

Date: Tuesday, November 27, 2018 Sheet 19 of 110

<Variant Name>

PEGATRON **Title :** 020 PAGE
PEGATRON PROPRIETARY AND CONFIDENTIAL
PEGATRON CORPORATION **Engineer:** *Ryan2_Wang*

Size	Project Name	Rev
A3	CLCL-N	1.00

Date: Tuesday, November 27, 2018 Sheet 20 of 110

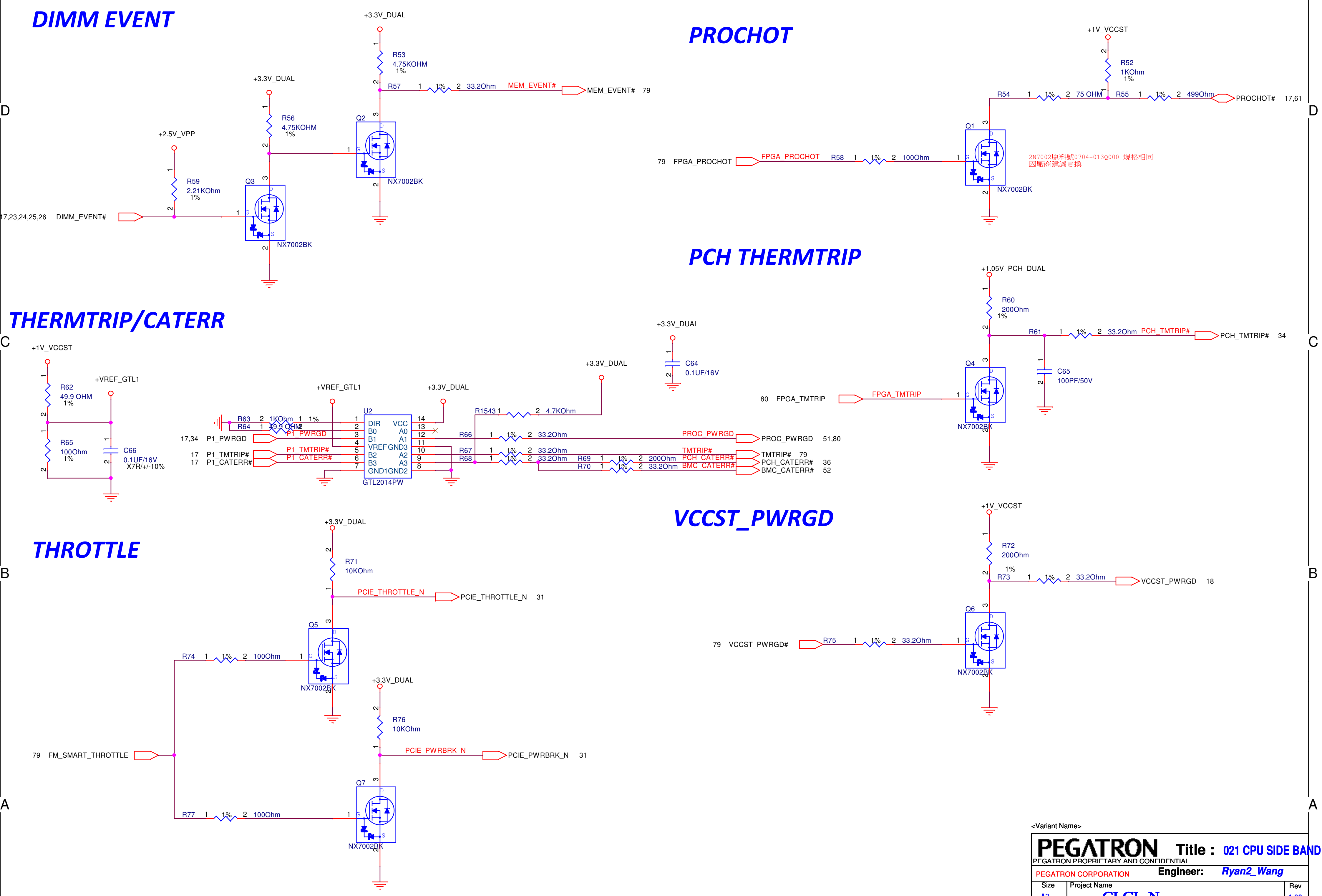
DIMM EVENT
+3.3V_DUAL
R53
4.75KOHM
1%
R57 1 1% 2 33.2Ohm
MEM_EVENT#
MEM_EVENT# 79
+3.3V_DUAL
R56
4.75KOHM
1%
Q2
NX7002BK
+2.5V_VPP
R59
2.21KOhm
1%
Q3
NX7002BK
17,23,24,25,26 DIMM_EVENT#
PROCHOT
+1V_VCCST
R52
1KOhm
1%
R54 1 1% 2 75 OHM
R55 1 1% 2 499Ohm
PROCHOT# 17,61
Q1
79 FPGA_PROCHOT
FPGA_PROCHOT
R58 1 1% 2 100Ohm
NX7002BK
2N7002原料號0704-013Q000 規格相同
因廠商建議更換
PCH THERMTRIP
+1.05V_PCH_DUAL
R60
200Ohm
1%
R61 1 1% 2 33.2Ohm
PCH_TMTRIP#
PCH_TMTRIP# 34
C65
100PF/50V
Q4
80 FPGA_TMTRIP
FPGA_TMTRIP
NX7002BK
THERMTRIP/CATERR
+1V_VCCST
R62
49.9 OHM
1%
+VREF_GTL1
R65
100Ohm
1%
C66
0.1UF/16V
X7R/+/-10%
+VREF_GTL1
+3.3V_DUAL
+3.3V_DUAL
+3.3V_DUAL
C64
0.1UF/16V
R63 2 1KOhm 1 1%
R64 1 49.9 OHM 2
P1_PWRGD
17,34 P1_PWRGD
17 P1_TMTRIP#
17 P1_CATERR#
P1_TMTRIP#
P1_CATERR#
U2
DIR VCC
B0 A0
B1 A1
VREF GND3
B2 A2
B3 A3
GND1 GND2
GTL2014PW
R1543 1 2 4.7KOhm
R66 1 1% 2 33.2Ohm
R67 1 1% 2 33.2Ohm
R68 1 1% 2 33.2Ohm
R69 1 1% 2 200Ohm
R70 1 1% 2 33.2Ohm
PROC_PWRGD
PROC_PWRGD 51,80
TMTRIP#
TMTRIP# 79
PCH_CATERR#
PCH_CATERR# 36
BMC_CATERR#
BMC_CATERR# 52
VCCST_PWRGD
+1V_VCCST
R72
200Ohm
1%
R73 1 1% 2 33.2Ohm
VCCST_PWRGD 18
Q6
79 VCCST_PWRGD#
R75 1 1% 2 33.2Ohm
NX7002BK
THROTTLE
+3.3V_DUAL
R71
10KOhm
PCIE_THROTTLE_N
PCIE_THROTTLE_N 31
Q5
R74 1 1% 2 100Ohm
NX7002BK
+3.3V_DUAL
R76
10KOhm
PCIE_PWRBRK_N
PCIE_PWRBRK_N 31
79 FM_SMART_THROTTLE
Q7
R77 1 1% 2 100Ohm
NX7002BK

<Variant Name>

PEGATRON

Title : 021 CPU SIDE BAND

PEGATRON PROPRIETARY AND CONFIDENTIAL

PEGATRON CORPORATION

Engineer: Ryan2_Wang

Size	Project Name	Rev
A3	CLCL-N	1.00

Date: Tuesday, November 27, 2018 Sheet 21 of 110

5 4 3 2 1

D

C

B

A

<Variant Name>

PEGATRON
Title : 022 PAGE
PEGATRON PROPRIETARY AND CONFIDENTIAL
PEGATRON CORPORATION
Engineer: *Ryan2_Wang*

Size	Project Name	Rev
A3	CLCL-N	1.00

Date: Tuesday, November 27, 2018

5 4 3 2 1

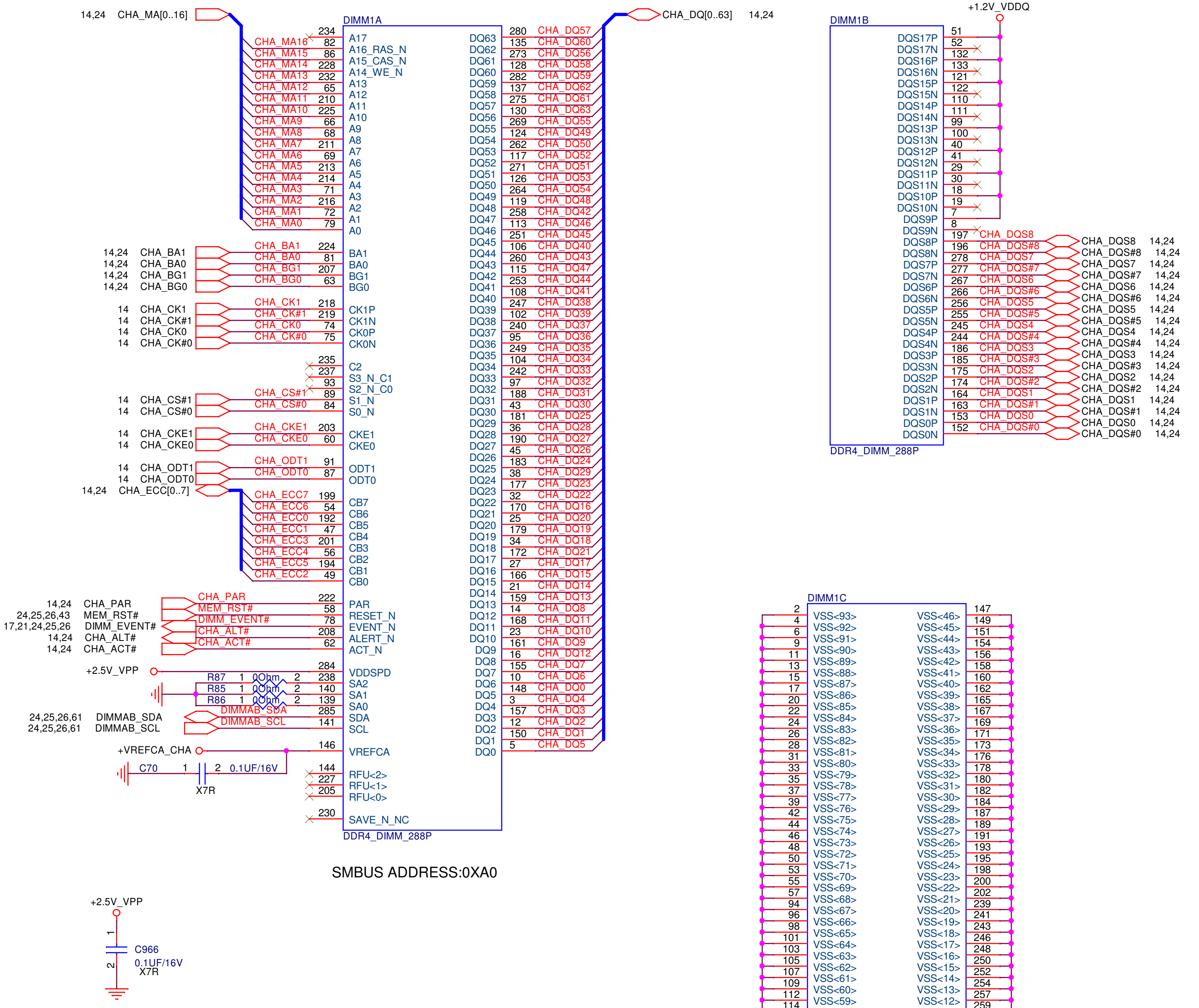
DIMM1A
14,24 CHA_MA[0..16]
CHA_MA16 234 82 A17
CHA_MA15 86 A16_RAS_N
CHA_MA14 228 A15_CAS_N
CHA_MA13 232 A14_WE_N
CHA_MA12 65 A13
CHA_MA11 210 A12
CHA_MA10 225 A11
CHA_MA9 66 A10
CHA_MA8 68 A9
CHA_MA7 211 A8
CHA_MA6 69 A7
CHA_MA5 213 A6
CHA_MA4 214 A5
CHA_MA3 71 A4
CHA_MA2 216 A3
CHA_MA1 72 A2
CHA_MA0 79 A1
A0
14,24 CHA_BA1 — CHA_BA1 224 BA1
14,24 CHA_BA0 — CHA_BA0 81 BA0
14,24 CHA_BG1 — CHA_BG1 207 BG1
14,24 CHA_BG0 — CHA_BG0 63 BG0
14 CHA_CK1 — CHA_CK1 218 CK1P
14 CHA_CK#1 — CHA_CK#1 219 CK1N
14 CHA_CK0 — CHA_CK0 74 CK0P
14 CHA_CK#0 — CHA_CK#0 75 CK0N
235 C2
237 S3_N_C1
93 S2_N_C0
14 CHA_CS#1 — CHA_CS#1 89 S1_N
14 CHA_CS#0 — CHA_CS#0 84 S0_N
14 CHA_CKE1 — CHA_CKE1 203 CKE1
14 CHA_CKE0 — CHA_CKE0 60 CKE0
14 CHA_ODT1 — CHA_ODT1 91 ODT1
14 CHA_ODT0 — CHA_ODT0 87 ODT0
14,24 CHA_ECC[0..7]
CHA_ECC7 199 CB7
CHA_ECC6 54 CB6
CHA_ECC0 192 CB5
CHA_ECC1 47 CB4
CHA_ECC3 201 CB3
CHA_ECC4 56 CB2
CHA_ECC5 194 CB1
CHA_ECC2 49 CB0
14,24 CHA_PAR — CHA_PAR 222 PAR
24,25,26,43 MEM_RST# — MEM_RST# 58 RESET_N
17,21,24,25,26 DIMM_EVENT# — DIMM_EVENT# 78 EVENT_N
14,24 CHA_ALT# — CHA_ALT# 208 ALERT_N
14,24 CHA_ACT# — CHA_ACT# 62 ACT_N
+2.5V_VPP 284 VDDSPD
R87 1 0Ohm 2 238 SA2
R85 1 0Ohm 2 140 SA1
R86 1 0Ohm 2 139 SA0
24,25,26,61 DIMMAB_SDA — DIMMAB_SDA 285 SDA
24,25,26,61 DIMMAB_SCL — DIMMAB_SCL 141 SCL
+VREFCA_CHA 146 VREFCA
C70 1 2 0.1UF/16V X7R
144 RFU<2>
227 RFU<1>
205 RFU<0>
230 SAVE_N_NC
DDR4_DIMM_288P
CHA_DQ[0..63] 14,24
DQ63 280 CHA_DQ57
DQ62 135 CHA_DQ60
DQ61 273 CHA_DQ56
DQ60 128 CHA_DQ58
DQ59 282 CHA_DQ59
DQ58 137 CHA_DQ62
DQ57 275 CHA_DQ61
DQ56 130 CHA_DQ63
DQ55 269 CHA_DQ55
DQ54 124 CHA_DQ49
DQ53 262 CHA_DQ50
DQ52 117 CHA_DQ52
DQ51 271 CHA_DQ51
DQ50 126 CHA_DQ53
DQ49 264 CHA_DQ54
DQ48 119 CHA_DQ48
DQ47 258 CHA_DQ42
DQ46 113 CHA_DQ46
DQ45 251 CHA_DQ45
DQ44 106 CHA_DQ40
DQ43 260 CHA_DQ43
DQ42 115 CHA_DQ47
DQ41 253 CHA_DQ44
DQ40 108 CHA_DQ41
DQ39 247 CHA_DQ38
DQ38 102 CHA_DQ39
DQ37 240 CHA_DQ37
DQ36 95 CHA_DQ36
DQ35 249 CHA_DQ35
DQ34 104 CHA_DQ34
DQ33 242 CHA_DQ33
DQ32 97 CHA_DQ32
DQ31 188 CHA_DQ31
DQ30 43 CHA_DQ30
DQ29 181 CHA_DQ25
DQ28 36 CHA_DQ28
DQ27 190 CHA_DQ27
DQ26 45 CHA_DQ26
DQ25 183 CHA_DQ24
DQ24 38 CHA_DQ29
DQ23 177 CHA_DQ23
DQ22 32 CHA_DQ22
DQ21 170 CHA_DQ16
DQ20 25 CHA_DQ20
DQ19 179 CHA_DQ19
DQ18 34 CHA_DQ18
DQ17 172 CHA_DQ21
DQ16 27 CHA_DQ17
DQ15 166 CHA_DQ15
DQ14 21 CHA_DQ14
DQ13 159 CHA_DQ13
DQ12 14 CHA_DQ8
DQ11 168 CHA_DQ11
DQ10 23 CHA_DQ10
DQ9 161 CHA_DQ9
DQ8 16 CHA_DQ12
DQ7 155 CHA_DQ7
DQ6 10 CHA_DQ6
DQ5 148 CHA_DQ0
DQ4 3 CHA_DQ4
DQ3 157 CHA_DQ3
DQ2 12 CHA_DQ2
DQ1 150 CHA_DQ1
DQ0 5 CHA_DQ5
SMBUS ADDRESS:0XA0
+2.5V_VPP
C966 1 2 0.1UF/16V X7R
DIMM1B
+1.2V_VDDQ
DQS17P 51
DQS17N 52
DQS16P 132
DQS16N 133
DQS15P 121
DQS15N 122
DQS14P 110
DQS14N 111
DQS13P 99
DQS13N 100
DQS12P 40
DQS12N 41
DQS11P 29
DQS11N 30
DQS10P 18
DQS10N 19
DQS9P 7
DQS9N 8
DQS8P 197 CHA_DQS8 — CHA_DQS8 14,24
DQS8N 196 CHA_DQS#8 — CHA_DQS#8 14,24
DQS7P 278 CHA_DQS7 — CHA_DQS7 14,24
DQS7N 277 CHA_DQS#7 — CHA_DQS#7 14,24
DQS6P 267 CHA_DQS6 — CHA_DQS6 14,24
DQS6N 266 CHA_DQS#6 — CHA_DQS#6 14,24
DQS5P 256 CHA_DQS5 — CHA_DQS5 14,24
DQS5N 255 CHA_DQS#5 — CHA_DQS#5 14,24
DQS4P 245 CHA_DQS4 — CHA_DQS4 14,24
DQS4N 244 CHA_DQS#4 — CHA_DQS#4 14,24
DQS3P 186 CHA_DQS3 — CHA_DQS3 14,24
DQS3N 185 CHA_DQS#3 — CHA_DQS#3 14,24
DQS2P 175 CHA_DQS2 — CHA_DQS2 14,24
DQS2N 174 CHA_DQS#2 — CHA_DQS#2 14,24
DQS1P 164 CHA_DQS1 — CHA_DQS1 14,24
DQS1N 163 CHA_DQS#1 — CHA_DQS#1 14,24
DQS0P 153 CHA_DQS0 — CHA_DQS0 14,24
DQS0N 152 CHA_DQS#0 — CHA_DQS#0 14,24
DDR4_DIMM_288P
DIMM1D
+2.5V_VPP
142 VPP<4>
143 VPP<3>
288 VPP<2>
286 VPP<1>
287 VPP<0>
+0.6V_VTT 77 VTT<1>
221 VTT<0>
+1.2V_VDDQ
59 VDD<25>
61 VDD<24>
64 VDD<23>
67 VDD<22>
70 VDD<21>
73 VDD<20>
76 VDD<19>
80 VDD<18>
83 VDD<17>
85 VDD<16>
88 VDD<15>
90 VDD<14>
92 VDD<13>
204 VDD<12>
206 VDD<11>
209 VDD<10>
212 VDD<9>
215 VDD<8>
217 VDD<7>
220 VDD<6>
223 VDD<5>
226 VDD<4>
229 VDD<3>
231 VDD<2>
233 VDD<1>
236 VDD<0>
12V<1> 1
12V<0> 145
NP_NC1 289
NP_NC2 290
NP_NC3 291
DDR4_DIMM_288P
DIMM1C
2 VSS<93>
4 VSS<92>
6 VSS<91>
9 VSS<90>
11 VSS<89>
13 VSS<88>
15 VSS<87>
17 VSS<86>
20 VSS<85>
22 VSS<84>
24 VSS<83>
26 VSS<82>
28 VSS<81>
31 VSS<80>
33 VSS<79>
35 VSS<78>
37 VSS<77>
39 VSS<76>
42 VSS<75>
44 VSS<74>
46 VSS<73>
48 VSS<72>
50 VSS<71>
53 VSS<70>
55 VSS<69>
57 VSS<68>
94 VSS<67>
96 VSS<66>
98 VSS<65>
101 VSS<64>
103 VSS<63>
105 VSS<62>
107 VSS<61>
109 VSS<60>
112 VSS<59>
114 VSS<58>
116 VSS<57>
118 VSS<56>
120 VSS<55>
123 VSS<54>
125 VSS<53>
127 VSS<52>
129 VSS<51>
131 VSS<50>
134 VSS<49>
136 VSS<48>
138 VSS<47>
VSS<46> 147
VSS<45> 149
VSS<44> 151
VSS<43> 154
VSS<42> 156
VSS<41> 158
VSS<40> 160
VSS<39> 162
VSS<38> 165
VSS<37> 167
VSS<36> 169
VSS<35> 171
VSS<34> 173
VSS<33> 176
VSS<32> 178
VSS<31> 180
VSS<30> 182
VSS<29> 184
VSS<28> 187
VSS<27> 189
VSS<26> 191
VSS<25> 193
VSS<24> 195
VSS<23> 198
VSS<22> 200
VSS<21> 202
VSS<20> 239
VSS<19> 241
VSS<18> 243
VSS<17> 246
VSS<16> 248
VSS<15> 250
VSS<14> 252
VSS<13> 254
VSS<12> 257
VSS<11> 259
VSS<10> 261
VSS<9> 263
VSS<8> 265
VSS<7> 268
VSS<6> 270
VSS<5> 272
VSS<4> 274
VSS<3> 276
VSS<2> 279
VSS<1> 281
VSS<0> 283
DDR4_DIMM_288P

<Variant Name>

PEGATRON **Title : 023 CHA DIMMA0**

PEGATRON PROPRIETARY AND CONFIDENTIAL

PEGATRON CORPORATION **Engineer:** ***Ryan2_Wang***

Size	Project Name	Rev
A3	CLCL-N	1.00

Date: Tuesday, November 27, 2018 Sheet 23 of 110

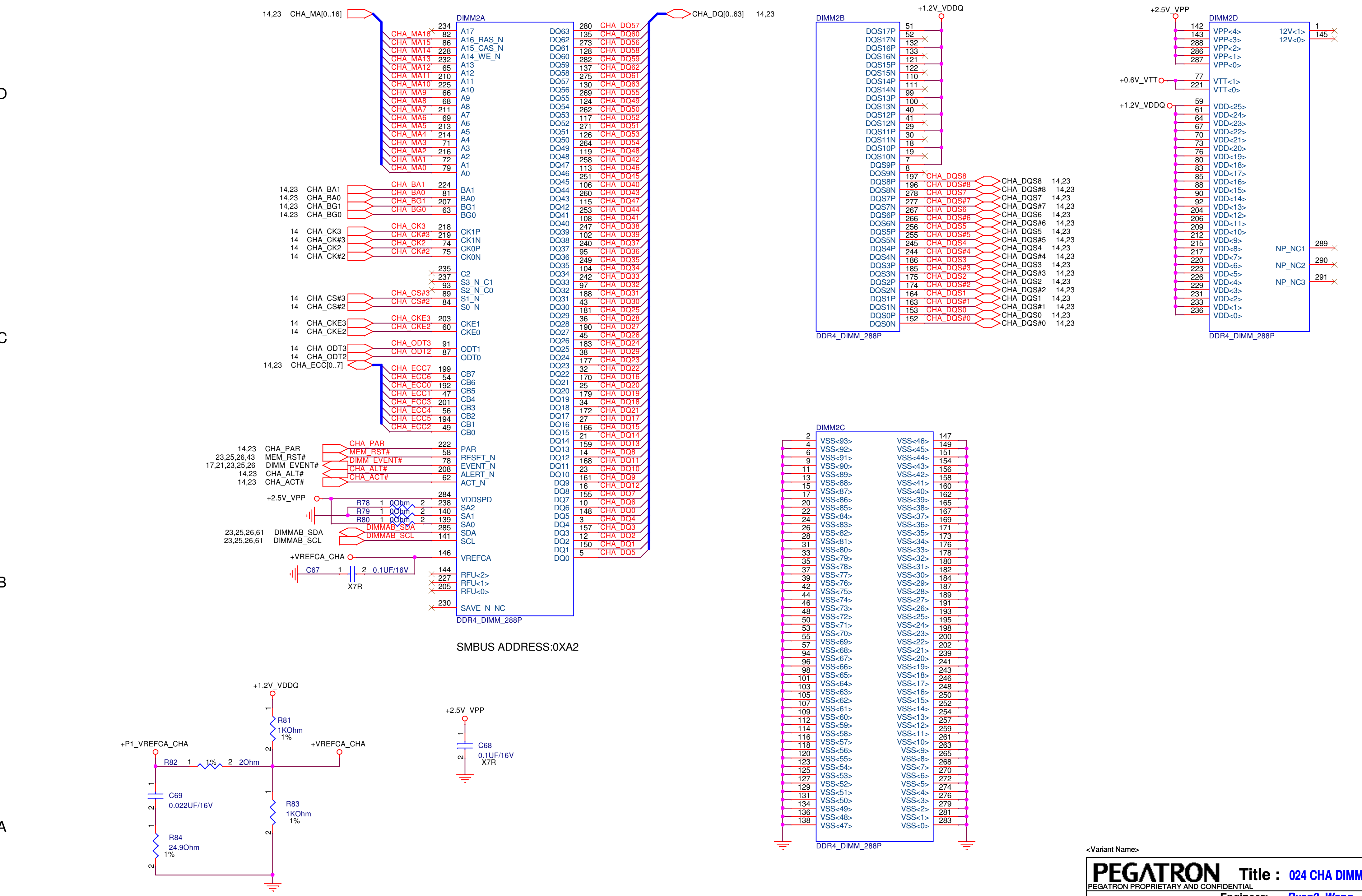
5
4
3
2
1
D
C
B
A
14,23 CHA_MA[0..16]
DIMM2A
234 A17
CHA_MA16 82 A16_RAS_N
CHA_MA15 86 A15_CAS_N
CHA_MA14 228 A14_WE_N
CHA_MA13 232 A13
CHA_MA12 65 A12
CHA_MA11 210 A11
CHA_MA10 225 A10
CHA_MA9 66 A9
CHA_MA8 68 A8
CHA_MA7 211 A7
CHA_MA6 69 A6
CHA_MA5 213 A5
CHA_MA4 214 A4
CHA_MA3 71 A3
CHA_MA2 216 A2
CHA_MA1 72 A1
CHA_MA0 79 A0
14,23 CHA_BA1
14,23 CHA_BA0
14,23 CHA_BG1
14,23 CHA_BG0
CHA_BA1 224 BA1
CHA_BA0 81 BA0
CHA_BG1 207 BG1
CHA_BG0 63 BG0
14 CHA_CK3
14 CHA_CK#3
14 CHA_CK2
14 CHA_CK#2
CHA_CK3 218 CK1P
CHA_CK#3 219 CK1N
CHA_CK2 74 CK0P
CHA_CK#2 75 CK0N
235 C2
237 S3_N_C1
93 S2_N_C0
14 CHA_CS#3
14 CHA_CS#2
CHA_CS#3 89 S1_N
CHA_CS#2 84 S0_N
14 CHA_CKE3
14 CHA_CKE2
CHA_CKE3 203 CKE1
CHA_CKE2 60 CKE0
14 CHA_ODT3
14 CHA_ODT2
CHA_ODT3 91 ODT1
CHA_ODT2 87 ODT0
14,23 CHA_ECC[0..7]
CHA_ECC7 199 CB7
CHA_ECC6 54 CB6
CHA_ECC0 192 CB5
CHA_ECC1 47 CB4
CHA_ECC3 201 CB3
CHA_ECC4 56 CB2
CHA_ECC5 194 CB1
CHA_ECC2 49 CB0
14,23 CHA_PAR
23,25,26,43 MEM_RST#
17,21,23,25,26 DIMM_EVENT#
14,23 CHA_ALT#
14,23 CHA_ACT#
CHA_PAR 222 PAR
MEM_RST# 58 RESET_N
DIMM_EVENT# 78 EVENT_N
CHA_ALT# 208 ALERT_N
CHA_ACT# 62 ACT_N
+2.5V_VPP
284 VDDSPD
R78 1 0Ohm 2 238 SA2
R79 1 0Ohm 2 140 SA1
R80 1 0Ohm 2 139 SA0
23,25,26,61 DIMMAB_SDA
23,25,26,61 DIMMAB_SCL
DIMMAB_SDA 285 SDA
DIMMAB_SCL 141 SCL
+VREFCA_CHA
146 VREFCA
C67 1 2 0.1UF/16V
X7R
144 RFU<2>
227 RFU<1>
205 RFU<0>
230 SAVE_N_NC
DDR4_DIMM_288P
CHA_DQ[0..63] 14,23
DQ63 280 CHA_DQ57
DQ62 135 CHA_DQ60
DQ61 273 CHA_DQ56
DQ60 128 CHA_DQ58
DQ59 282 CHA_DQ59
DQ58 137 CHA_DQ62
DQ57 275 CHA_DQ61
DQ56 130 CHA_DQ63
DQ55 269 CHA_DQ55
DQ54 124 CHA_DQ49
DQ53 262 CHA_DQ50
DQ52 117 CHA_DQ52
DQ51 271 CHA_DQ51
DQ50 126 CHA_DQ53
DQ49 264 CHA_DQ54
DQ48 119 CHA_DQ48
DQ47 258 CHA_DQ42
DQ46 113 CHA_DQ46
DQ45 251 CHA_DQ45
DQ44 106 CHA_DQ40
DQ43 260 CHA_DQ43
DQ42 115 CHA_DQ47
DQ41 253 CHA_DQ44
DQ40 108 CHA_DQ41
DQ39 247 CHA_DQ38
DQ38 102 CHA_DQ39
DQ37 240 CHA_DQ37
DQ36 95 CHA_DQ36
DQ35 249 CHA_DQ35
DQ34 104 CHA_DQ34
DQ33 242 CHA_DQ33
DQ32 97 CHA_DQ32
DQ31 188 CHA_DQ31
DQ30 43 CHA_DQ30
DQ29 181 CHA_DQ25
DQ28 36 CHA_DQ28
DQ27 190 CHA_DQ27
DQ26 45 CHA_DQ26
DQ25 183 CHA_DQ24
DQ24 38 CHA_DQ29
DQ23 177 CHA_DQ23
DQ22 32 CHA_DQ22
DQ21 170 CHA_DQ16
DQ20 25 CHA_DQ20
DQ19 179 CHA_DQ19
DQ18 34 CHA_DQ18
DQ17 172 CHA_DQ21
DQ16 27 CHA_DQ17
DQ15 166 CHA_DQ15
DQ14 21 CHA_DQ14
DQ13 159 CHA_DQ13
DQ12 14 CHA_DQ8
DQ11 168 CHA_DQ11
DQ10 23 CHA_DQ10
DQ9 161 CHA_DQ9
DQ8 16 CHA_DQ12
DQ7 155 CHA_DQ7
DQ6 10 CHA_DQ6
DQ5 148 CHA_DQ0
DQ4 3 CHA_DQ4
DQ3 157 CHA_DQ3
DQ2 12 CHA_DQ2
DQ1 150 CHA_DQ1
DQ0 5 CHA_DQ5
SMBUS ADDRESS:0XA2
DIMM2B
+1.2V_VDDQ
DQS17P 51
DQS17N 52
DQS16P 132
DQS16N 133
DQS15P 121
DQS15N 122
DQS14P 110
DQS14N 111
DQS13P 99
DQS13N 100
DQS12P 40
DQS12N 41
DQS11P 29
DQS11N 30
DQS10P 18
DQS10N 19
DQS9P 7
DQS9N 8
DQS8P 197 CHA_DQS8 CHA_DQS8 14,23
DQS8N 196 CHA_DQS#8 CHA_DQS#8 14,23
DQS7P 278 CHA_DQS7 CHA_DQS7 14,23
DQS7N 277 CHA_DQS#7 CHA_DQS#7 14,23
DQS6P 267 CHA_DQS6 CHA_DQS6 14,23
DQS6N 266 CHA_DQS#6 CHA_DQS#6 14,23
DQS5P 256 CHA_DQS5 CHA_DQS5 14,23
DQS5N 255 CHA_DQS#5 CHA_DQS#5 14,23
DQS4P 245 CHA_DQS4 CHA_DQS4 14,23
DQS4N 244 CHA_DQS#4 CHA_DQS#4 14,23
DQS3P 186 CHA_DQS3 CHA_DQS3 14,23
DQS3N 185 CHA_DQS#3 CHA_DQS#3 14,23
DQS2P 175 CHA_DQS2 CHA_DQS2 14,23
DQS2N 174 CHA_DQS#2 CHA_DQS#2 14,23
DQS1P 164 CHA_DQS1 CHA_DQS1 14,23
DQS1N 163 CHA_DQS#1 CHA_DQS#1 14,23
DQS0P 153 CHA_DQS0 CHA_DQS0 14,23
DQS0N 152 CHA_DQS#0 CHA_DQS#0 14,23
DDR4_DIMM_288P
DIMM2D
+2.5V_VPP
142 VPP<4>
143 VPP<3>
288 VPP<2>
286 VPP<1>
287 VPP<0>
+0.6V_VTT
77 VTT<1>
221 VTT<0>
+1.2V_VDDQ
59 VDD<25>
61 VDD<24>
64 VDD<23>
67 VDD<22>
70 VDD<21>
73 VDD<20>
76 VDD<19>
80 VDD<18>
83 VDD<17>
85 VDD<16>
88 VDD<15>
90 VDD<14>
92 VDD<13>
204 VDD<12>
206 VDD<11>
209 VDD<10>
212 VDD<9>
215 VDD<8>
217 VDD<7>
220 VDD<6>
223 VDD<5>
226 VDD<4>
229 VDD<3>
231 VDD<2>
233 VDD<1>
236 VDD<0>
12V<1> 1
12V<0> 145
NP_NC1 289
NP_NC2 290
NP_NC3 291
DDR4_DIMM_288P
DIMM2C
2 VSS<93> VSS<46> 147
4 VSS<92> VSS<45> 149
6 VSS<91> VSS<44> 151
9 VSS<90> VSS<43> 154
11 VSS<89> VSS<42> 156
13 VSS<88> VSS<41> 158
15 VSS<87> VSS<40> 160
17 VSS<86> VSS<39> 162
20 VSS<85> VSS<38> 165
22 VSS<84> VSS<37> 167
24 VSS<83> VSS<36> 169
26 VSS<82> VSS<35> 171
28 VSS<81> VSS<34> 173
31 VSS<80> VSS<33> 176
33 VSS<79> VSS<32> 178
35 VSS<78> VSS<31> 180
37 VSS<77> VSS<30> 182
39 VSS<76> VSS<29> 184
42 VSS<75> VSS<28> 187
44 VSS<74> VSS<27> 189
46 VSS<73> VSS<26> 191
48 VSS<72> VSS<25> 193
50 VSS<71> VSS<24> 195
53 VSS<70> VSS<23> 198
55 VSS<69> VSS<22> 200
57 VSS<68> VSS<21> 202
94 VSS<67> VSS<20> 239
96 VSS<66> VSS<19> 241
98 VSS<65> VSS<18> 243
101 VSS<64> VSS<17> 246
103 VSS<63> VSS<16> 248
105 VSS<62> VSS<15> 250
107 VSS<61> VSS<14> 252
109 VSS<60> VSS<13> 254
112 VSS<59> VSS<12> 257
114 VSS<58> VSS<11> 259
116 VSS<57> VSS<10> 261
118 VSS<56> VSS<9> 263
120 VSS<55> VSS<8> 265
123 VSS<54> VSS<7> 268
125 VSS<53> VSS<6> 270
127 VSS<52> VSS<5> 272
129 VSS<51> VSS<4> 274
131 VSS<50> VSS<3> 276
134 VSS<49> VSS<2> 279
136 VSS<48> VSS<1> 281
138 VSS<47> VSS<0> 283
DDR4_DIMM_288P
+1.2V_VDDQ
1
R81
1KOhm
1%
2
+P1_VREFCA_CHA
+VREFCA_CHA
R82 1 1% 2 2Ohm
1
C69
0.022UF/16V
2
1
R83
1KOhm
1%
2
1
R84
24.9Ohm
1%
2
+2.5V_VPP
1
C68
0.1UF/16V
2
X7R

<Variant Name>

PEGATRON
PEGATRON PROPRIETARY AND CONFIDENTIAL
PEGATRON CORPORATION

Title : 024 CHA DIMMA1
Engineer: Ryan2_Wang

Size	Project Name	Rev
A3	CLCL-N	1.00

Date: Tuesday, November 27, 2018 Sheet 24 of 110

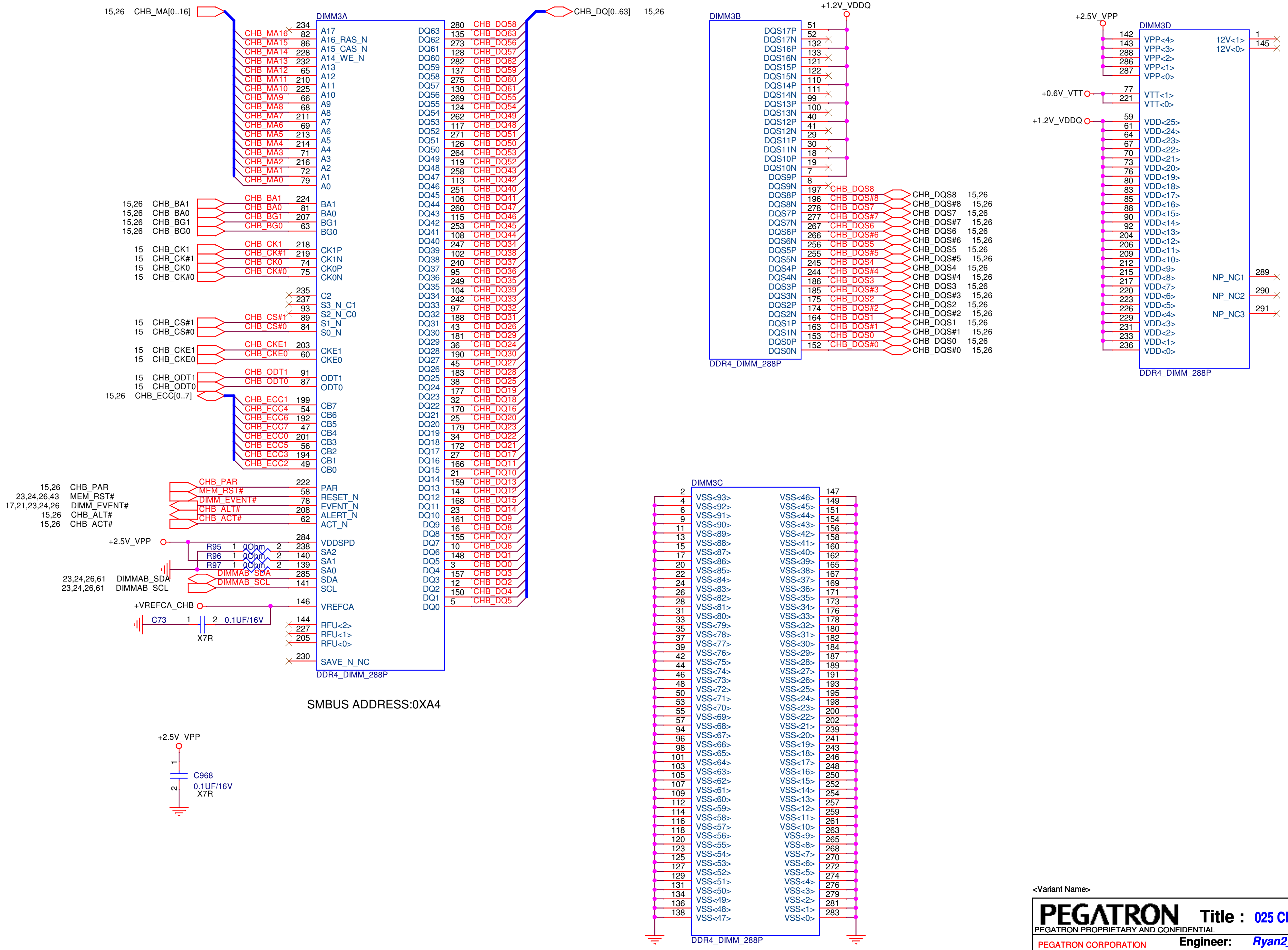
15,26 CHB_MA[0..16]
DIMM3A
234 A17
CHB_MA16 82 A16_RAS_N
CHB_MA15 86 A15_CAS_N
CHB_MA14 228 A14_WE_N
CHB_MA13 232 A13
CHB_MA12 65 A12
CHB_MA11 210 A11
CHB_MA10 225 A10
CHB_MA9 66 A9
CHB_MA8 68 A8
CHB_MA7 211 A7
CHB_MA6 69 A6
CHB_MA5 213 A5
CHB_MA4 214 A4
CHB_MA3 71 A3
CHB_MA2 216 A2
CHB_MA1 72 A1
CHB_MA0 79 A0
15,26 CHB_BA1 CHB_BA1 224 BA1
15,26 CHB_BA0 CHB_BA0 81 BA0
15,26 CHB_BG1 CHB_BG1 207 BG1
15,26 CHB_BG0 CHB_BG0 63 BG0
15 CHB_CK1 CHB_CK1 218 CK1P
15 CHB_CK#1 CHB_CK#1 219 CK1N
15 CHB_CK0 CHB_CK0 74 CK0P
15 CHB_CK#0 CHB_CK#0 75 CK0N
235 C2
237 S3_N_C1
93 S2_N_C0
15 CHB_CS#1 CHB_CS#1 89 S1_N
15 CHB_CS#0 CHB_CS#0 84 S0_N
15 CHB_CKE1 CHB_CKE1 203 CKE1
15 CHB_CKE0 CHB_CKE0 60 CKE0
15 CHB_ODT1 CHB_ODT1 91 ODT1
15 CHB_ODT0 CHB_ODT0 87 ODT0
15,26 CHB_ECC[0..7]
CHB_ECC1 199 CB7
CHB_ECC4 54 CB6
CHB_ECC6 192 CB5
CHB_ECC7 47 CB4
CHB_ECC0 201 CB3
CHB_ECC5 56 CB2
CHB_ECC3 194 CB1
CHB_ECC2 49 CB0
15,26 CHB_PAR CHB_PAR 222 PAR
23,24,26,43 MEM_RST# MEM_RST# 58 RESET_N
17,21,23,24,26 DIMM_EVENT# DIMM_EVENT# 78 EVENT_N
15,26 CHB_ALT# CHB_ALT# 208 ALERT_N
15,26 CHB_ACT# CHB_ACT# 62 ACT_N
+2.5V_VPP 284 VDDSPD
R95 1 0Ohm 2 238 SA2
R96 1 0Ohm 2 140 SA1
R97 1 0Ohm 2 139 SA0
23,24,26,61 DIMMAB_SDA DIMMAB_SDA 285 SDA
23,24,26,61 DIMMAB_SCL DIMMAB_SCL 141 SCL
+VREFCA_CHB 146 VREFCA
C73 1 2 0.1UF/16V
X7R
144 RFU<2>
227 RFU<1>
205 RFU<0>
230 SAVE_N_NC
DDR4_DIMM_288P
DQ63 280 CHB_DQ58
DQ62 135 CHB_DQ63
DQ61 273 CHB_DQ56
DQ60 128 CHB_DQ57
DQ59 282 CHB_DQ62
DQ58 137 CHB_DQ59
DQ57 275 CHB_DQ60
DQ56 130 CHB_DQ61
DQ55 269 CHB_DQ55
DQ54 124 CHB_DQ54
DQ53 262 CHB_DQ49
DQ52 117 CHB_DQ48
DQ51 271 CHB_DQ51
DQ50 126 CHB_DQ50
DQ49 264 CHB_DQ53
DQ48 119 CHB_DQ52
DQ47 258 CHB_DQ43
DQ46 113 CHB_DQ42
DQ45 251 CHB_DQ40
DQ44 106 CHB_DQ41
DQ43 260 CHB_DQ47
DQ42 115 CHB_DQ46
DQ41 253 CHB_DQ45
DQ40 108 CHB_DQ44
DQ39 247 CHB_DQ34
DQ38 102 CHB_DQ38
DQ37 240 CHB_DQ37
DQ36 95 CHB_DQ36
DQ35 249 CHB_DQ35
DQ34 104 CHB_DQ39
DQ33 242 CHB_DQ33
DQ32 97 CHB_DQ32
DQ31 188 CHB_DQ31
DQ30 43 CHB_DQ26
DQ29 181 CHB_DQ29
DQ28 36 CHB_DQ24
DQ27 190 CHB_DQ30
DQ26 45 CHB_DQ27
DQ25 183 CHB_DQ28
DQ24 38 CHB_DQ25
DQ23 177 CHB_DQ19
DQ22 32 CHB_DQ18
DQ21 170 CHB_DQ16
DQ20 25 CHB_DQ20
DQ19 179 CHB_DQ23
DQ18 34 CHB_DQ22
DQ17 172 CHB_DQ21
DQ16 27 CHB_DQ17
DQ15 166 CHB_DQ11
DQ14 21 CHB_DQ10
DQ13 159 CHB_DQ13
DQ12 14 CHB_DQ12
DQ11 168 CHB_DQ15
DQ10 23 CHB_DQ14
DQ9 161 CHB_DQ9
DQ8 16 CHB_DQ8
DQ7 155 CHB_DQ7
DQ6 10 CHB_DQ6
DQ5 148 CHB_DQ1
DQ4 3 CHB_DQ0
DQ3 157 CHB_DQ3
DQ2 12 CHB_DQ2
DQ1 150 CHB_DQ4
DQ0 5 CHB_DQ5
CHB_DQ[0..63] 15,26
+2.5V_VPP
C968
1
2
0.1UF/16V
X7R
+1.2V_VDDQ
DIMM3B
DQS17P 51
DQS17N 52
DQS16P 132
DQS16N 133
DQS15P 121
DQS15N 122
DQS14P 110
DQS14N 111
DQS13P 99
DQS13N 100
DQS12P 40
DQS12N 41
DQS11P 29
DQS11N 30
DQS10P 18
DQS10N 19
DQS9P 7
DQS9N 8
DQS8P 197 CHB_DQS8 CHB_DQS8 15,26
DQS8N 196 CHB_DQS#8 CHB_DQS#8 15,26
DQS7P 278 CHB_DQS7 CHB_DQS7 15,26
DQS7N 277 CHB_DQS#7 CHB_DQS#7 15,26
DQS6P 267 CHB_DQS6 CHB_DQS6 15,26
DQS6N 266 CHB_DQS#6 CHB_DQS#6 15,26
DQS5P 256 CHB_DQS5 CHB_DQS5 15,26
DQS5N 255 CHB_DQS#5 CHB_DQS#5 15,26
DQS4P 245 CHB_DQS4 CHB_DQS4 15,26
DQS4N 244 CHB_DQS#4 CHB_DQS#4 15,26
DQS3P 186 CHB_DQS3 CHB_DQS3 15,26
DQS3N 185 CHB_DQS#3 CHB_DQS#3 15,26
DQS2P 175 CHB_DQS2 CHB_DQS2 15,26
DQS2N 174 CHB_DQS#2 CHB_DQS#2 15,26
DQS1P 164 CHB_DQS1 CHB_DQS1 15,26
DQS1N 163 CHB_DQS#1 CHB_DQS#1 15,26
DQS0P 153 CHB_DQS0 CHB_DQS0 15,26
DQS0N 152 CHB_DQS#0 CHB_DQS#0 15,26
DDR4_DIMM_288P
+2.5V_VPP
DIMM3D
142 VPP<4>
143 VPP<3>
288 VPP<2>
286 VPP<1>
287 VPP<0>
+0.6V_VTT 77 VTT<1>
221 VTT<0>
+1.2V_VDDQ 59 VDD<25>
61 VDD<24>
64 VDD<23>
67 VDD<22>
70 VDD<21>
73 VDD<20>
76 VDD<19>
80 VDD<18>
83 VDD<17>
85 VDD<16>
88 VDD<15>
90 VDD<14>
92 VDD<13>
204 VDD<12>
206 VDD<11>
209 VDD<10>
212 VDD<9>
215 VDD<8>
217 VDD<7>
220 VDD<6>
223 VDD<5>
226 VDD<4>
229 VDD<3>
231 VDD<2>
233 VDD<1>
236 VDD<0>
12V<1> 1
12V<0> 145
NP_NC1 289
NP_NC2 290
NP_NC3 291
DDR4_DIMM_288P
DIMM3C
2 VSS<93> VSS<46> 147
4 VSS<92> VSS<45> 149
6 VSS<91> VSS<44> 151
9 VSS<90> VSS<43> 154
11 VSS<89> VSS<42> 156
13 VSS<88> VSS<41> 158
15 VSS<87> VSS<40> 160
17 VSS<86> VSS<39> 162
20 VSS<85> VSS<38> 165
22 VSS<84> VSS<37> 167
24 VSS<83> VSS<36> 169
26 VSS<82> VSS<35> 171
28 VSS<81> VSS<34> 173
31 VSS<80> VSS<33> 176
33 VSS<79> VSS<32> 178
35 VSS<78> VSS<31> 180
37 VSS<77> VSS<30> 182
39 VSS<76> VSS<29> 184
42 VSS<75> VSS<28> 187
44 VSS<74> VSS<27> 189
46 VSS<73> VSS<26> 191
48 VSS<72> VSS<25> 193
50 VSS<71> VSS<24> 195
53 VSS<70> VSS<23> 198
55 VSS<69> VSS<22> 200
57 VSS<68> VSS<21> 202
94 VSS<67> VSS<20> 239
96 VSS<66> VSS<19> 241
98 VSS<65> VSS<18> 243
101 VSS<64> VSS<17> 246
103 VSS<63> VSS<16> 248
105 VSS<62> VSS<15> 250
107 VSS<61> VSS<14> 252
109 VSS<60> VSS<13> 254
112 VSS<59> VSS<12> 257
114 VSS<58> VSS<11> 259
116 VSS<57> VSS<10> 261
118 VSS<56> VSS<9> 263
120 VSS<55> VSS<8> 265
123 VSS<54> VSS<7> 268
125 VSS<53> VSS<6> 270
127 VSS<52> VSS<5> 272
129 VSS<51> VSS<4> 274
131 VSS<50> VSS<3> 276
134 VSS<49> VSS<2> 279
136 VSS<48> VSS<1> 281
138 VSS<47> VSS<0> 283
DDR4_DIMM_288P

SMBUS ADDRESS:0XA4

<Variant Name>

PEGATRON **Title :** 025 CHB DIMMB0
PEGATRON PROPRIETARY AND CONFIDENTIAL
PEGATRON CORPORATION **Engineer:** *Ryan2_Wang*
Size A3 | Project Name CLCL-N | Rev 1.00
Date: Tuesday, November 27, 2018 | Sheet 25 of 110

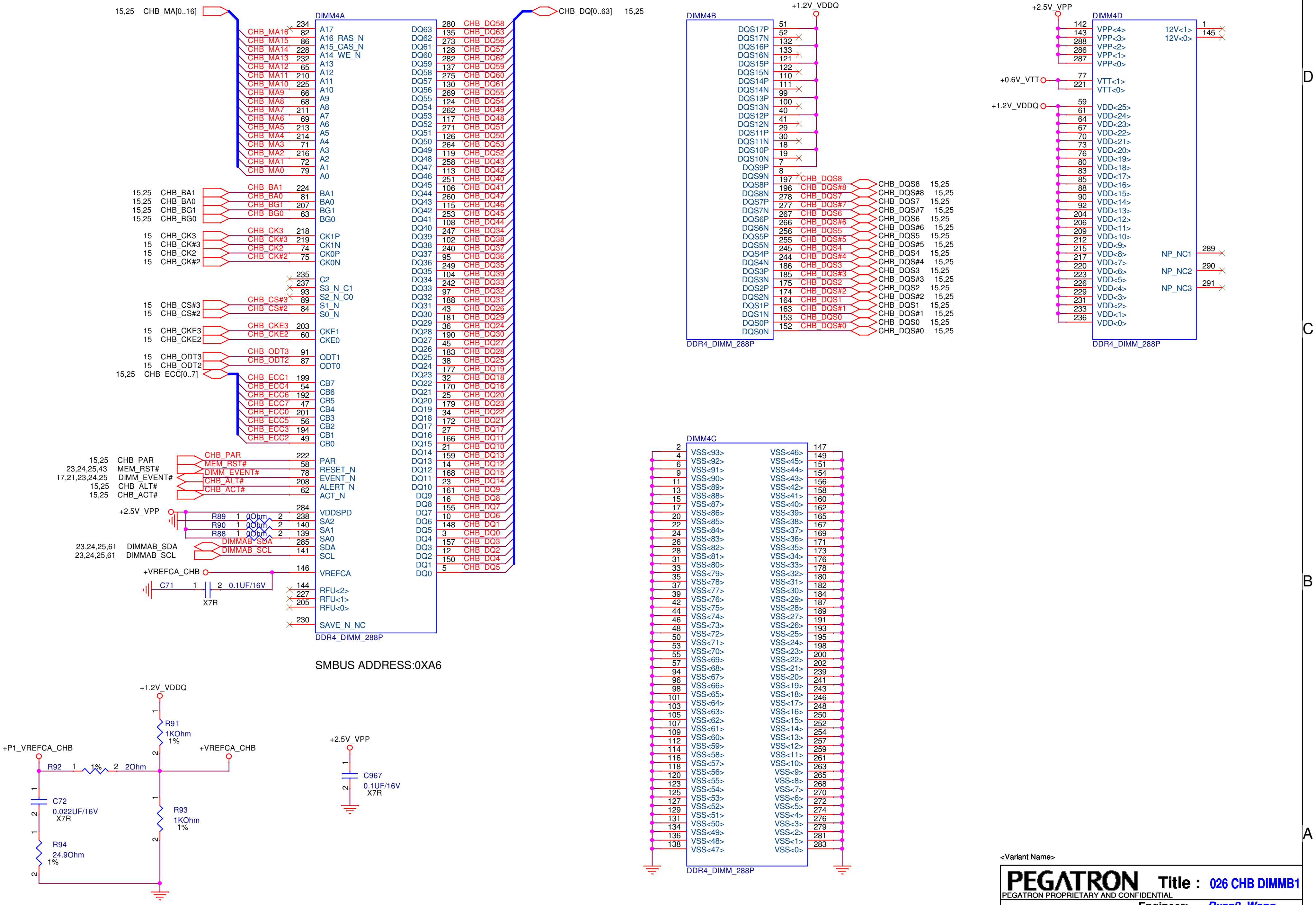
15,25 CHB_MA[0..16]
CHB_DQ[0..63] 15,25
DIMM4A
234 A17
CHB_MA16 82 A16_RAS_N
CHB_MA15 86 A15_CAS_N
CHB_MA14 228 A14_WE_N
CHB_MA13 232 A13
CHB_MA12 65 A12
CHB_MA11 210 A11
CHB_MA10 225 A10
CHB_MA9 66 A9
CHB_MA8 68 A8
CHB_MA7 211 A7
CHB_MA6 69 A6
CHB_MA5 213 A5
CHB_MA4 214 A4
CHB_MA3 71 A3
CHB_MA2 216 A2
CHB_MA1 72 A1
CHB_MA0 79 A0
15,25 CHB_BA1 — CHB_BA1 224 BA1
15,25 CHB_BA0 — CHB_BA0 81 BA0
15,25 CHB_BG1 — CHB_BG1 207 BG1
15,25 CHB_BG0 — CHB_BG0 63 BG0
15 CHB_CK3 — CHB_CK3 218 CK1P
15 CHB_CK#3 — CHB_CK#3 219 CK1N
15 CHB_CK2 — CHB_CK2 74 CK0P
15 CHB_CK#2 — CHB_CK#2 75 CK0N
235 C2
237 S3_N_C1
93 S2_N_C0
15 CHB_CS#3 — CHB_CS#3 89 S1_N
15 CHB_CS#2 — CHB_CS#2 84 S0_N
15 CHB_CKE3 — CHB_CKE3 203 CKE1
15 CHB_CKE2 — CHB_CKE2 60 CKE0
15 CHB_ODT3 — CHB_ODT3 91 ODT1
15 CHB_ODT2 — CHB_ODT2 87 ODT0
15,25 CHB_ECC[0..7]
CHB_ECC1 199 CB7
CHB_ECC4 54 CB6
CHB_ECC6 192 CB5
CHB_ECC7 47 CB4
CHB_ECC0 201 CB3
CHB_ECC5 56 CB2
CHB_ECC3 194 CB1
CHB_ECC2 49 CB0
15,25 CHB_PAR — CHB_PAR 222 PAR
23,24,25,43 MEM_RST# — MEM_RST# 58 RESET_N
17,21,23,24,25 DIMM_EVENT# — DIMM_EVENT# 78 EVENT_N
15,25 CHB_ALT# — CHB_ALT# 208 ALERT_N
15,25 CHB_ACT# — CHB_ACT# 62 ACT_N
+2.5V_VPP
284 VDDSPD
R89 1 0Ohm 2 238 SA2
R90 1 0Ohm 2 140 SA1
R88 1 0Ohm 2 139 SA0
23,24,25,61 DIMMAB_SDA — DIMMAB_SDA 285 SDA
23,24,25,61 DIMMAB_SCL — DIMMAB_SCL 141 SCL
+VREFCA_CHB 146 VREFCA
C71 1 2 0.1UF/16V X7R
144 RFU<2>
227 RFU<1>
205 RFU<0>
230 SAVE_N_NC
DQ63 280 CHB_DQ58
DQ62 135 CHB_DQ63
DQ61 273 CHB_DQ56
DQ60 128 CHB_DQ57
DQ59 282 CHB_DQ62
DQ58 137 CHB_DQ59
DQ57 275 CHB_DQ60
DQ56 130 CHB_DQ61
DQ55 269 CHB_DQ55
DQ54 124 CHB_DQ54
DQ53 262 CHB_DQ49
DQ52 117 CHB_DQ48
DQ51 271 CHB_DQ51
DQ50 126 CHB_DQ50
DQ49 264 CHB_DQ53
DQ48 119 CHB_DQ52
DQ47 258 CHB_DQ43
DQ46 113 CHB_DQ42
DQ45 251 CHB_DQ40
DQ44 106 CHB_DQ41
DQ43 260 CHB_DQ47
DQ42 115 CHB_DQ46
DQ41 253 CHB_DQ45
DQ40 108 CHB_DQ44
DQ39 247 CHB_DQ34
DQ38 102 CHB_DQ38
DQ37 240 CHB_DQ37
DQ36 95 CHB_DQ36
DQ35 249 CHB_DQ35
DQ34 104 CHB_DQ39
DQ33 242 CHB_DQ33
DQ32 97 CHB_DQ32
DQ31 188 CHB_DQ31
DQ30 43 CHB_DQ26
DQ29 181 CHB_DQ29
DQ28 36 CHB_DQ24
DQ27 190 CHB_DQ30
DQ26 45 CHB_DQ27
DQ25 183 CHB_DQ28
DQ24 38 CHB_DQ25
DQ23 177 CHB_DQ19
DQ22 32 CHB_DQ18
DQ21 170 CHB_DQ16
DQ20 25 CHB_DQ20
DQ19 179 CHB_DQ23
DQ18 34 CHB_DQ22
DQ17 172 CHB_DQ21
DQ16 27 CHB_DQ17
DQ15 166 CHB_DQ11
DQ14 21 CHB_DQ10
DQ13 159 CHB_DQ13
DQ12 14 CHB_DQ12
DQ11 168 CHB_DQ15
DQ10 23 CHB_DQ14
DQ9 161 CHB_DQ9
DQ8 16 CHB_DQ8
DQ7 155 CHB_DQ7
DQ6 10 CHB_DQ6
DQ5 148 CHB_DQ1
DQ4 3 CHB_DQ0
DQ3 157 CHB_DQ3
DQ2 12 CHB_DQ2
DQ1 150 CHB_DQ4
DQ0 5 CHB_DQ5
DDR4_DIMM_288P
DIMM4B
+1.2V_VDDQ
DQS17P 51
DQS17N 52
DQS16P 132
DQS16N 133
DQS15P 121
DQS15N 122
DQS14P 110
DQS14N 111
DQS13P 99
DQS13N 100
DQS12P 40
DQS12N 41
DQS11P 29
DQS11N 30
DQS10P 18
DQS10N 19
DQS9P 7
DQS9N 8
DQS8P 197 CHB_DQS8 — CHB_DQS8 15,25
DQS8N 196 CHB_DQS#8 — CHB_DQS#8 15,25
DQS7P 278 CHB_DQS7 — CHB_DQS7 15,25
DQS7N 277 CHB_DQS#7 — CHB_DQS#7 15,25
DQS6P 267 CHB_DQS6 — CHB_DQS6 15,25
DQS6N 266 CHB_DQS#6 — CHB_DQS#6 15,25
DQS5P 256 CHB_DQS5 — CHB_DQS5 15,25
DQS5N 255 CHB_DQS#5 — CHB_DQS#5 15,25
DQS4P 245 CHB_DQS4 — CHB_DQS4 15,25
DQS4N 244 CHB_DQS#4 — CHB_DQS#4 15,25
DQS3P 186 CHB_DQS3 — CHB_DQS3 15,25
DQS3N 185 CHB_DQS#3 — CHB_DQS#3 15,25
DQS2P 175 CHB_DQS2 — CHB_DQS2 15,25
DQS2N 174 CHB_DQS#2 — CHB_DQS#2 15,25
DQS1P 164 CHB_DQS1 — CHB_DQS1 15,25
DQS1N 163 CHB_DQS#1 — CHB_DQS#1 15,25
DQS0P 153 CHB_DQS0 — CHB_DQS0 15,25
DQS0N 152 CHB_DQS#0 — CHB_DQS#0 15,25
DDR4_DIMM_288P
DIMM4D
+2.5V_VPP
142 VPP<4>
143 VPP<3>
288 VPP<2>
286 VPP<1>
287 VPP<0>
+0.6V_VTT
77 VTT<1>
221 VTT<0>
+1.2V_VDDQ
59 VDD<25>
61 VDD<24>
64 VDD<23>
67 VDD<22>
70 VDD<21>
73 VDD<20>
76 VDD<19>
80 VDD<18>
83 VDD<17>
85 VDD<16>
88 VDD<15>
90 VDD<14>
92 VDD<13>
204 VDD<12>
206 VDD<11>
209 VDD<10>
212 VDD<9>
215 VDD<8>
217 VDD<7>
220 VDD<6>
223 VDD<5>
226 VDD<4>
229 VDD<3>
231 VDD<2>
233 VDD<1>
236 VDD<0>
12V<1> 1
12V<0> 145
NP_NC1 289
NP_NC2 290
NP_NC3 291
DDR4_DIMM_288P
DIMM4C
2 VSS<93> — VSS<46> 147
4 VSS<92> — VSS<45> 149
6 VSS<91> — VSS<44> 151
9 VSS<90> — VSS<43> 154
11 VSS<89> — VSS<42> 156
13 VSS<88> — VSS<41> 158
15 VSS<87> — VSS<40> 160
17 VSS<86> — VSS<39> 162
20 VSS<85> — VSS<38> 165
22 VSS<84> — VSS<37> 167
24 VSS<83> — VSS<36> 169
26 VSS<82> — VSS<35> 171
28 VSS<81> — VSS<34> 173
31 VSS<80> — VSS<33> 176
33 VSS<79> — VSS<32> 178
35 VSS<78> — VSS<31> 180
37 VSS<77> — VSS<30> 182
39 VSS<76> — VSS<29> 184
42 VSS<75> — VSS<28> 187
44 VSS<74> — VSS<27> 189
46 VSS<73> — VSS<26> 191
48 VSS<72> — VSS<25> 193
50 VSS<71> — VSS<24> 195
53 VSS<70> — VSS<23> 198
55 VSS<69> — VSS<22> 200
57 VSS<68> — VSS<21> 202
94 VSS<67> — VSS<20> 239
96 VSS<66> — VSS<19> 241
98 VSS<65> — VSS<18> 243
101 VSS<64> — VSS<17> 246
103 VSS<63> — VSS<16> 248
105 VSS<62> — VSS<15> 250
107 VSS<61> — VSS<14> 252
109 VSS<60> — VSS<13> 254
112 VSS<59> — VSS<12> 257
114 VSS<58> — VSS<11> 259
116 VSS<57> — VSS<10> 261
118 VSS<56> — VSS<9> 263
120 VSS<55> — VSS<8> 265
123 VSS<54> — VSS<7> 268
125 VSS<53> — VSS<6> 270
127 VSS<52> — VSS<5> 272
129 VSS<51> — VSS<4> 274
131 VSS<50> — VSS<3> 276
134 VSS<49> — VSS<2> 279
136 VSS<48> — VSS<1> 281
138 VSS<47> — VSS<0> 283
DDR4_DIMM_288P
+1.2V_VDDQ
R91 1KOhm 1%
+P1_VREFCA_CHB
R92 1 1% 2 2Ohm
+VREFCA_CHB
C72 0.022UF/16V X7R
R93 1KOhm 1%
R94 24.9Ohm 1%
+2.5V_VPP
C967 0.1UF/16V X7R

SMBUS ADDRESS:0XA6

<Variant Name>

PEGATRON

PEGATRON PROPRIETARY AND CONFIDENTIAL

PEGATRON CORPORATION

Title : **026 CHB DIMMB1**

Engineer: ***Ryan2_Wang***

Size	Project Name	Rev
A3	CLCL-N	1.00

Date: Tuesday, November 27, 2018 Sheet 26 of 110

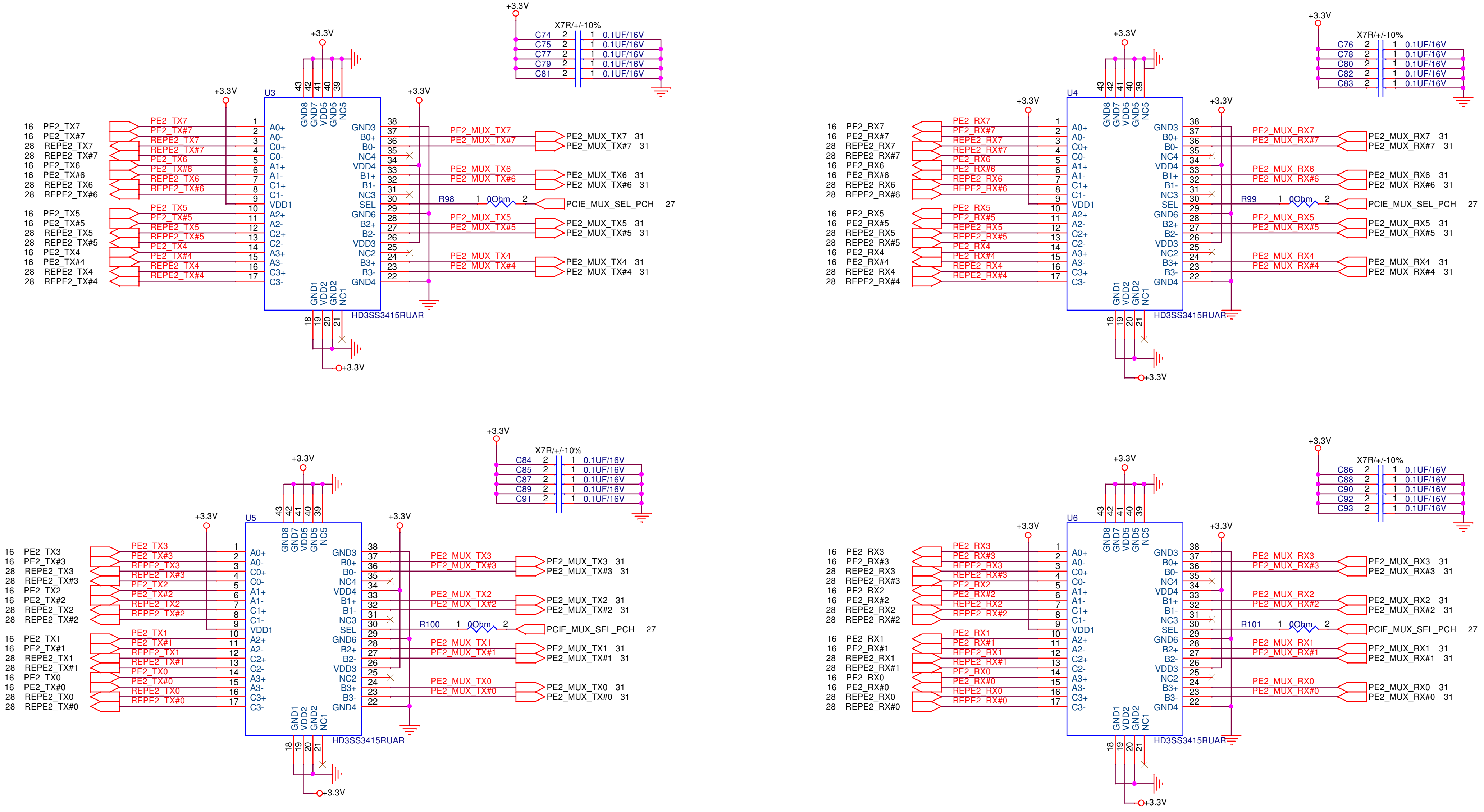
U3
HD3SS3415RUAR
+3.3V
X7R/+/-10%
C74 2 1 0.1UF/16V
C75 2 1 0.1UF/16V
C77 2 1 0.1UF/16V
C79 2 1 0.1UF/16V
C81 2 1 0.1UF/16V
16 PE2_TX7
16 PE2_TX#7
28 REPE2_TX7
28 REPE2_TX#7
16 PE2_TX6
16 PE2_TX#6
28 REPE2_TX6
28 REPE2_TX#6
16 PE2_TX5
16 PE2_TX#5
28 REPE2_TX5
28 REPE2_TX#5
16 PE2_TX4
16 PE2_TX#4
28 REPE2_TX4
28 REPE2_TX#4
A0+ A0- C0+ C0- A1+ A1- C1+ C1- VDD1 A2+ A2- C2+ C2- A3+ A3- C3+ C3-
GND3 B0+ B0- NC4 VDD4 B1+ B1- NC3 SEL GND6 B2+ B2- VDD3 NC2 B3+ B3- GND4
GND8 GND7 VDD5 GND5 NC5
GND1 VDD2 GND2 NC1
PE2_MUX_TX7 31
PE2_MUX_TX#7 31
PE2_MUX_TX6 31
PE2_MUX_TX#6 31
R98 1 0Ohm 2
PCIE_MUX_SEL_PCH 27
PE2_MUX_TX5 31
PE2_MUX_TX#5 31
PE2_MUX_TX4 31
PE2_MUX_TX#4 31
U4
HD3SS3415RUAR
C76 2 1 0.1UF/16V
C78 2 1 0.1UF/16V
C80 2 1 0.1UF/16V
C82 2 1 0.1UF/16V
C83 2 1 0.1UF/16V
16 PE2_RX7
16 PE2_RX#7
28 REPE2_RX7
28 REPE2_RX#7
16 PE2_RX6
16 PE2_RX#6
28 REPE2_RX6
28 REPE2_RX#6
16 PE2_RX5
16 PE2_RX#5
28 REPE2_RX5
28 REPE2_RX#5
16 PE2_RX4
16 PE2_RX#4
28 REPE2_RX4
28 REPE2_RX#4
PE2_MUX_RX7 31
PE2_MUX_RX#7 31
PE2_MUX_RX6 31
PE2_MUX_RX#6 31
R99 1 0Ohm 2
PCIE_MUX_SEL_PCH 27
PE2_MUX_RX5 31
PE2_MUX_RX#5 31
PE2_MUX_RX4 31
PE2_MUX_RX#4 31
U5
HD3SS3415RUAR
C84 2 1 0.1UF/16V
C85 2 1 0.1UF/16V
C87 2 1 0.1UF/16V
C89 2 1 0.1UF/16V
C91 2 1 0.1UF/16V
16 PE2_TX3
16 PE2_TX#3
28 REPE2_TX3
28 REPE2_TX#3
16 PE2_TX2
16 PE2_TX#2
28 REPE2_TX2
28 REPE2_TX#2
16 PE2_TX1
16 PE2_TX#1
28 REPE2_TX1
28 REPE2_TX#1
16 PE2_TX0
16 PE2_TX#0
28 REPE2_TX0
28 REPE2_TX#0
PE2_MUX_TX3 31
PE2_MUX_TX#3 31
PE2_MUX_TX2 31
PE2_MUX_TX#2 31
R100 1 0Ohm 2
PCIE_MUX_SEL_PCH 27
PE2_MUX_TX1 31
PE2_MUX_TX#1 31
PE2_MUX_TX0 31
PE2_MUX_TX#0 31
U6
HD3SS3415RUAR
C86 2 1 0.1UF/16V
C88 2 1 0.1UF/16V
C90 2 1 0.1UF/16V
C92 2 1 0.1UF/16V
C93 2 1 0.1UF/16V
16 PE2_RX3
16 PE2_RX#3
28 REPE2_RX3
28 REPE2_RX#3
16 PE2_RX2
16 PE2_RX#2
28 REPE2_RX2
28 REPE2_RX#2
16 PE2_RX1
16 PE2_RX#1
28 REPE2_RX1
28 REPE2_RX#1
16 PE2_RX0
16 PE2_RX#0
28 REPE2_RX0
28 REPE2_RX#0
PE2_MUX_RX3 31
PE2_MUX_RX#3 31
PE2_MUX_RX2 31
PE2_MUX_RX#2 31
R101 1 0Ohm 2
PCIE_MUX_SEL_PCH 27
PE2_MUX_RX1 31
PE2_MUX_RX#1 31
PE2_MUX_RX0 31
PE2_MUX_RX#0 31

<Variant Name>

PEGATRON PEGATRON PROPRIETARY AND CONFIDENTIAL

Title : **027 PCIE MUX**

PEGATRON CORPORATION

Engineer: *Ryan2_Wang*

Size	Project Name	Rev
A3	CLCL-N	1.00

Date: Tuesday, November 27, 2018 Sheet 27 of 110

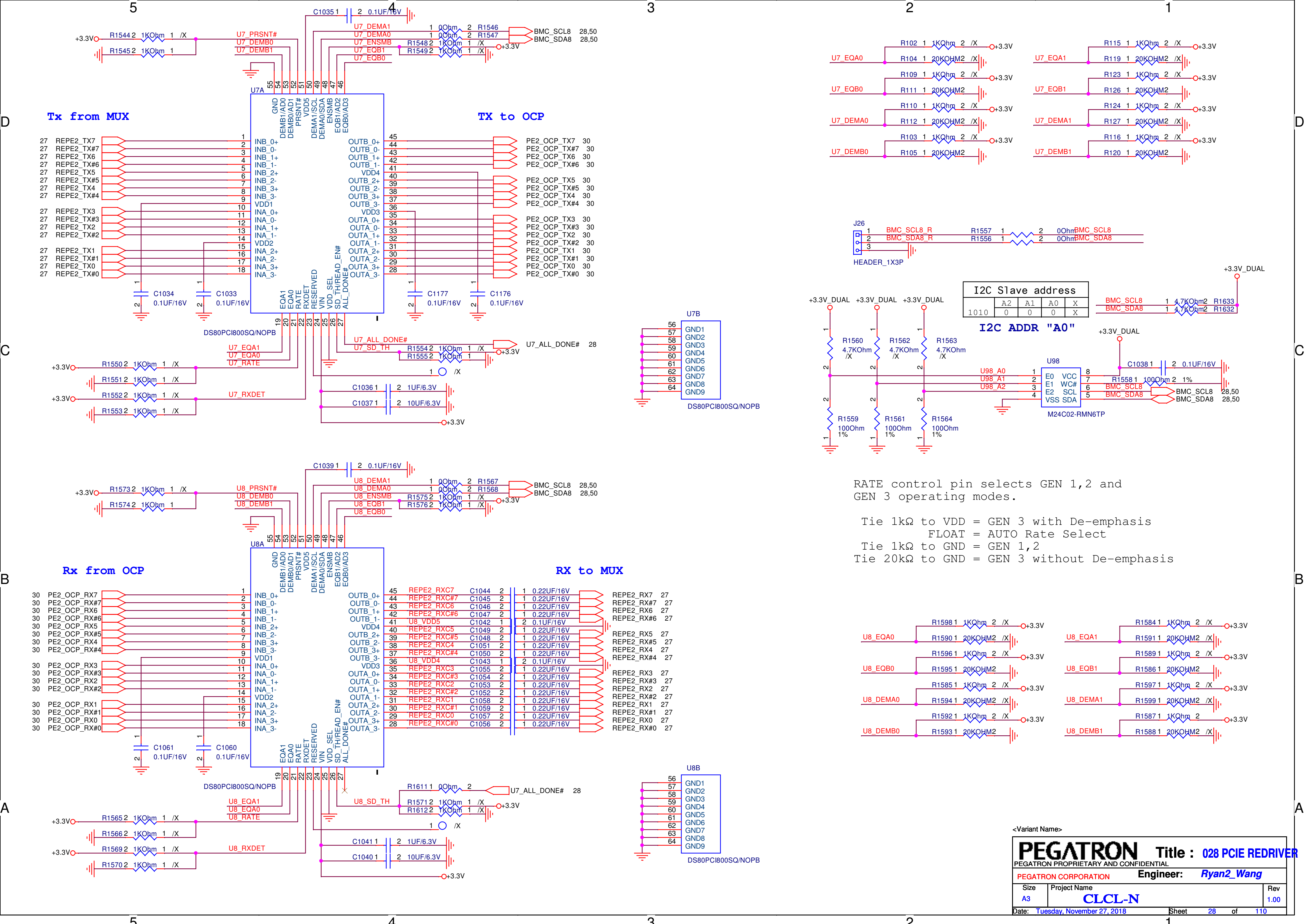
Tx from MUX
TX to OCP
Rx from OCP
RX to MUX
U7A
U7B
U8A
U8B
DS80PCI800SQ/NOPB
GND
DEMB1/AD0
DEMB0/AD1
PRSNT#
VDD5
DEMA1/SCL
DEMA0/SDA
ENSMB
EQB1/AD2
EQB0/AD3
INB_0+
INB_0-
INB_1+
INB_1-
INB_2+
INB_2-
INB_3+
INB_3-
VDD1
INA_0+
INA_0-
INA_1+
INA_1-
VDD2
INA_2+
INA_2-
INA_3+
INA_3-
OUTB_0+
OUTB_0-
OUTB_1+
OUTB_1-
VDD4
OUTB_2+
OUTB_2-
OUTB_3+
OUTB_3-
VDD3
OUTA_0+
OUTA_0-
OUTA_1+
OUTA_1-
OUTA_2+
OUTA_2-
OUTA_3+
OUTA_3-
EQA1
EQA0
RATE
RXDET
RESERVED
VIN
VDD_SEL
SD_TH/READ_EN#
ALL_DONE#
GND1
GND2
GND3
GND4
GND5
GND6
GND7
GND8
GND9
REPE2_TX7
REPE2_TX#7
REPE2_TX6
REPE2_TX#6
REPE2_TX5
REPE2_TX#5
REPE2_TX4
REPE2_TX#4
REPE2_TX3
REPE2_TX#3
REPE2_TX2
REPE2_TX#2
REPE2_TX1
REPE2_TX#1
REPE2_TX0
REPE2_TX#0
PE2_OCP_TX7 30
PE2_OCP_TX#7 30
PE2_OCP_TX6 30
PE2_OCP_TX#6 30
PE2_OCP_TX5 30
PE2_OCP_TX#5 30
PE2_OCP_TX4 30
PE2_OCP_TX#4 30
PE2_OCP_TX3 30
PE2_OCP_TX#3 30
PE2_OCP_TX2 30
PE2_OCP_TX#2 30
PE2_OCP_TX1 30
PE2_OCP_TX#1 30
PE2_OCP_TX0 30
PE2_OCP_TX#0 30
PE2_OCP_RX7
PE2_OCP_RX#7
PE2_OCP_RX6
PE2_OCP_RX#6
PE2_OCP_RX5
PE2_OCP_RX#5
PE2_OCP_RX4
PE2_OCP_RX#4
PE2_OCP_RX3
PE2_OCP_RX#3
PE2_OCP_RX2
PE2_OCP_RX#2
PE2_OCP_RX1
PE2_OCP_RX#1
PE2_OCP_RX0
PE2_OCP_RX#0
REPE2_RXC7
REPE2_RXC#7
REPE2_RXC6
REPE2_RXC#6
U8_VDD5
REPE2_RXC5
REPE2_RXC#5
REPE2_RXC4
REPE2_RXC#4
U8_VDD4
REPE2_RXC3
REPE2_RXC#3
REPE2_RXC2
REPE2_RXC#2
REPE2_RXC1
REPE2_RXC#1
REPE2_RXC0
REPE2_RXC#0
REPE2_RX7 27
REPE2_RX#7 27
REPE2_RX6 27
REPE2_RX#6 27
REPE2_RX5 27
REPE2_RX#5 27
REPE2_RX4 27
REPE2_RX#4 27
REPE2_RX3 27
REPE2_RX#3 27
REPE2_RX2 27
REPE2_RX#2 27
REPE2_RX1 27
REPE2_RX#1 27
REPE2_RX0 27
REPE2_RX#0 27
0.22UF/16V
0.1UF/16V
U7_PRSNT#
U7_DEMB0
U7_DEMB1
U7_DEMA1
U7_DEMA0
U7_ENSMB
U7_EQB1
U7_EQB0
U7_EQA1
U7_EQA0
U7_RATE
U7_RXDET
U7_ALL_DONE#
U7_SD_TH
U7_ALL_DONE# 28
U8_PRSNT#
U8_DEMB0
U8_DEMB1
U8_DEMA1
U8_DEMA0
U8_ENSMB
U8_EQB1
U8_EQB0
U8_EQA1
U8_EQA0
U8_RATE
U8_RXDET
U8_SD_TH
BMC_SCL8 28,50
BMC_SDA8 28,50
+3.3V
+3.3V_DUAL
1KOhm
20KOHM
0Ohm
1UF/6.3V
10UF/6.3V
C1035
C1034
C1033
C1177
C1176
C1036
C1037
C1039
C1061
C1060
C1041
C1040
R1544
R1545
R1546
R1547
R1548
R1549
R1550
R1551
R1552
R1553
R1554
R1555
R1565
R1566
R1569
R1570
R1567
R1568
R1573
R1574
R1575
R1576
R1571
R1611
R1612
R102
R104
R109
R111
R110
R112
R103
R105
R115
R119
R123
R126
R124
R127
R116
R120
R1598
R1590
R1596
R1595
R1585
R1594
R1592
R1593
R1584
R1591
R1589
R1586
R1597
R1599
R1587
R1588
U7_EQA0
U7_EQB0
U7_DEMA0
U7_DEMB0
U7_EQA1
U7_EQB1
U7_DEMA1
U7_DEMB1
U8_EQA0
U8_EQB0
U8_DEMA0
U8_DEMB0
U8_EQA1
U8_EQB1
U8_DEMA1
U8_DEMB1
J26
HEADER_1X3P
BMC_SCL8_R
BMC_SDA8_R
R1557
R1556
I2C ADDR "A0"
U98
M24C02-RMN6TP
E0
E1
E2
VSS
VCC
WC#
SCL
SDA
U98_A0
U98_A1
U98_A2
R1560 4.7KOhm /X
R1562 4.7KOhm /X
R1563 4.7KOhm /X
R1559 100Ohm 1%
R1561 100Ohm 1%
R1564 100Ohm 1%
R1558 100Ohm 1%
C1038 0.1UF/16V
R1633 4.7KOhm
R1632 4.7KOhm
/X
5
4
3
2
1
D
C
B
A

I2C Slave address

	A2	A1	A0	X
1010	0	0	0	X

RATE control pin selects GEN 1,2 and
GEN 3 operating modes.

Tie 1kΩ to VDD = GEN 3 with De-emphasis
FLOAT = AUTO Rate Select
Tie 1kΩ to GND = GEN 1,2
Tie 20kΩ to GND = GEN 3 without De-emphasis

<Variant Name>

PEGATRON

Title : 028 PCIE REDRIVER

PEGATRON PROPRIETARY AND CONFIDENTIAL

PEGATRON CORPORATION

Engineer: Ryan2_Wang

Size	Project Name	Rev
A3	CLCL-N	1.00

Date: Tuesday, November 27, 2018 Sheet 28 of 110

PERST# shall be deasserted at least 1s after the
NIC_PWR_GOOD assertion to Main Power Mode

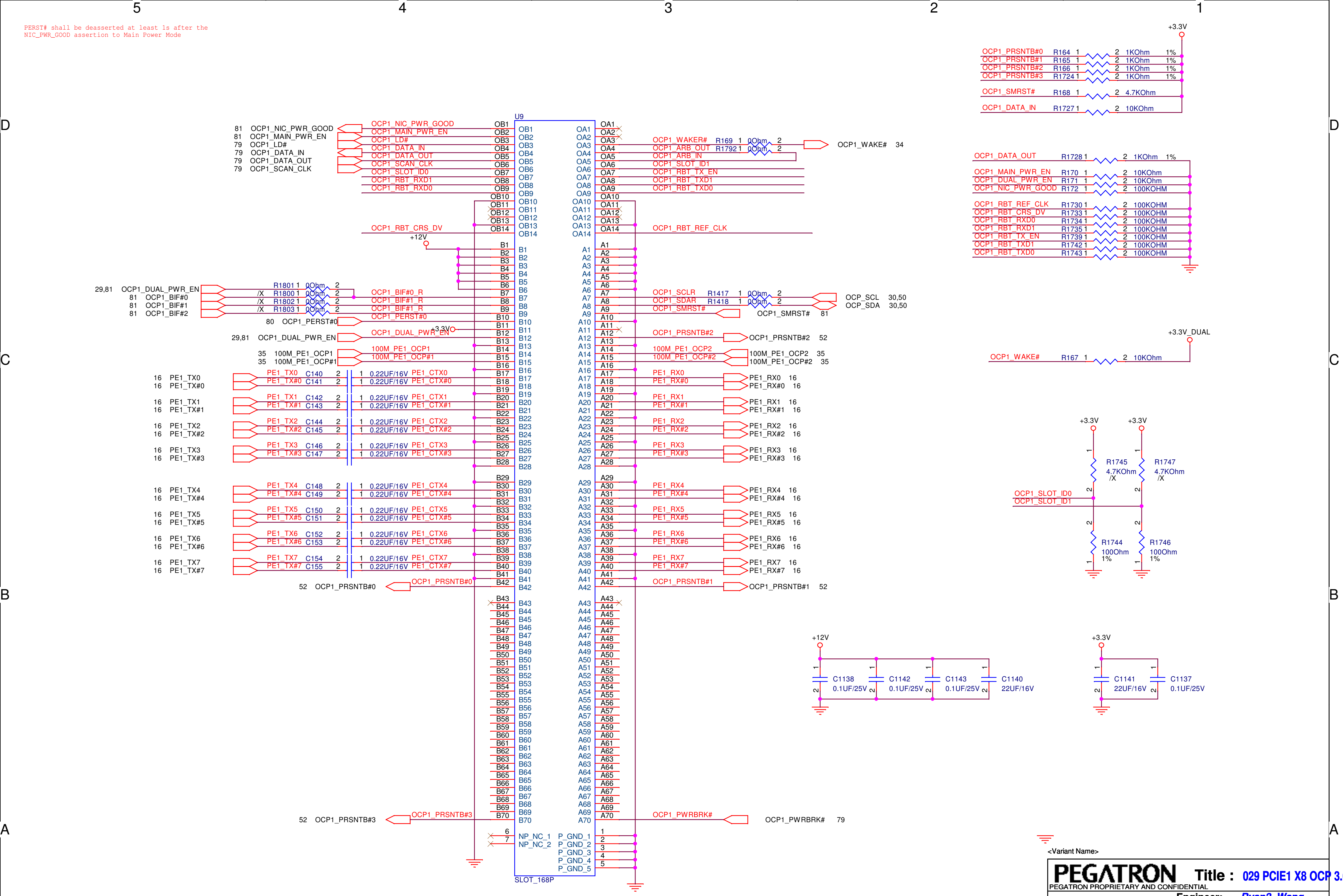

5
4
3
2
1
D
C
B
A
U9
SLOT_168P
OB1 … OB14
OA1 … OA14
B1 … B70
A1 … A70
NP_NC_1
NP_NC_2
P_GND_1
P_GND_2
P_GND_3
P_GND_4
P_GND_5
81 OCP1_NIC_PWR_GOOD
81 OCP1_MAIN_PWR_EN
79 OCP1_LD#
79 OCP1_DATA_IN
79 OCP1_DATA_OUT
79 OCP1_SCAN_CLK
OCP1_NIC_PWR_GOOD
OCP1_MAIN_PWR_EN
OCP1_LD#
OCP1_DATA_IN
OCP1_DATA_OUT
OCP1_SCAN_CLK
OCP1_SLOT_ID0
OCP1_RBT_RXD1
OCP1_RBT_RXD0
OCP1_RBT_CRS_DV
+12V
29,81 OCP1_DUAL_PWR_EN
81 OCP1_BIF#0
81 OCP1_BIF#1
81 OCP1_BIF#2
R1801 1 0Ohm 2
R1800 1 0Ohm 2 /X
R1802 1 0Ohm 2 /X
R1803 1 0Ohm 2 /X
OCP1_BIF#0_R
OCP1_BIF#1_R
OCP1_BIF#1_R
80 OCP1_PERST#0
OCP1_PERST#0
+3.3V
29,81 OCP1_DUAL_PWR_EN
OCP1_DUAL_PWR_EN
35 100M_PE1_OCP1
35 100M_PE1_OCP#1
100M_PE1_OCP1
100M_PE1_OCP#1
16 PE1_TX0
16 PE1_TX#0
16 PE1_TX1
16 PE1_TX#1
16 PE1_TX2
16 PE1_TX#2
16 PE1_TX3
16 PE1_TX#3
16 PE1_TX4
16 PE1_TX#4
16 PE1_TX5
16 PE1_TX#5
16 PE1_TX6
16 PE1_TX#6
16 PE1_TX7
16 PE1_TX#7
C140 … C155 0.22UF/16V
PE1_CTX0
PE1_CTX#0
PE1_CTX1
PE1_CTX#1
PE1_CTX2
PE1_CTX#2
PE1_CTX3
PE1_CTX#3
PE1_CTX4
PE1_CTX#4
PE1_CTX5
PE1_CTX#5
PE1_CTX6
PE1_CTX#6
PE1_CTX7
PE1_CTX#7
52 OCP1_PRSNTB#0
OCP1_PRSNTB#0
52 OCP1_PRSNTB#3
OCP1_PRSNTB#3
OCP1_WAKER#
OCP1_ARB_OUT
OCP1_ARB_IN
OCP1_SLOT_ID1
OCP1_RBT_TX_EN
OCP1_RBT_TXD1
OCP1_RBT_TXD0
R169 1 0Ohm 2
R1792 1 0Ohm 2
OCP1_WAKE# 34
OCP1_RBT_REF_CLK
OCP1_SCLR
OCP1_SDAR
OCP1_SMRST#
R1417 1 0Ohm 2
R1418 1 0Ohm 2
OCP_SCL 30,50
OCP_SDA 30,50
OCP1_SMRST# 81
OCP1_PRSNTB#2
OCP1_PRSNTB#2 52
100M_PE1_OCP2
100M_PE1_OCP#2
100M_PE1_OCP2 35
100M_PE1_OCP#2 35
PE1_RX0
PE1_RX#0
PE1_RX1
PE1_RX#1
PE1_RX2
PE1_RX#2
PE1_RX3
PE1_RX#3
PE1_RX4
PE1_RX#4
PE1_RX5
PE1_RX#5
PE1_RX6
PE1_RX#6
PE1_RX7
PE1_RX#7
PE1_RX0 16
PE1_RX#0 16
PE1_RX1 16
PE1_RX#1 16
PE1_RX2 16
PE1_RX#2 16
PE1_RX3 16
PE1_RX#3 16
PE1_RX4 16
PE1_RX#4 16
PE1_RX5 16
PE1_RX#5 16
PE1_RX6 16
PE1_RX#6 16
PE1_RX7 16
PE1_RX#7 16
OCP1_PRSNTB#1
OCP1_PRSNTB#1 52
OCP1_PWRBRK#
OCP1_PWRBRK# 79
+3.3V
OCP1_PRSNTB#0 R164 1 2 1KOhm 1%
OCP1_PRSNTB#1 R165 1 2 1KOhm 1%
OCP1_PRSNTB#2 R166 1 2 1KOhm 1%
OCP1_PRSNTB#3 R1724 1 2 1KOhm 1%
OCP1_SMRST# R168 1 2 4.7KOhm
OCP1_DATA_IN R1727 1 2 10KOhm
OCP1_DATA_OUT R1728 1 2 1KOhm 1%
OCP1_MAIN_PWR_EN R170 1 2 10KOhm
OCP1_DUAL_PWR_EN R171 1 2 10KOhm
OCP1_NIC_PWR_GOOD R172 1 2 100KOHM
OCP1_RBT_REF_CLK R1730 1 2 100KOHM
OCP1_RBT_CRS_DV R1733 1 2 100KOHM
OCP1_RBT_RXD0 R1734 1 2 100KOHM
OCP1_RBT_RXD1 R1735 1 2 100KOHM
OCP1_RBT_TX_EN R1739 1 2 100KOHM
OCP1_RBT_TXD1 R1742 1 2 100KOHM
OCP1_RBT_TXD0 R1743 1 2 100KOHM
+3.3V_DUAL
OCP1_WAKE# R167 1 2 10KOhm
+3.3V
+3.3V
R1745 4.7KOhm /X
R1747 4.7KOhm /X
OCP1_SLOT_ID0
OCP1_SLOT_ID1
R1744 100Ohm 1%
R1746 100Ohm 1%
+12V
C1138 0.1UF/25V
C1142 0.1UF/25V
C1143 0.1UF/25V
C1140 22UF/16V
+3.3V
C1141 22UF/16V
C1137 0.1UF/25V

<Variant Name>

PEGATRON Title : 029 PCIE1 X8 OCP 3.
PEGATRON PROPRIETARY AND CONFIDENTIAL
PEGATRON CORPORATION Engineer: *Ryan2_Wang*

Size	Project Name	Rev
A3	CLCL-N	1.00

Date: Tuesday, November 27, 2018 Sheet 29 of 110

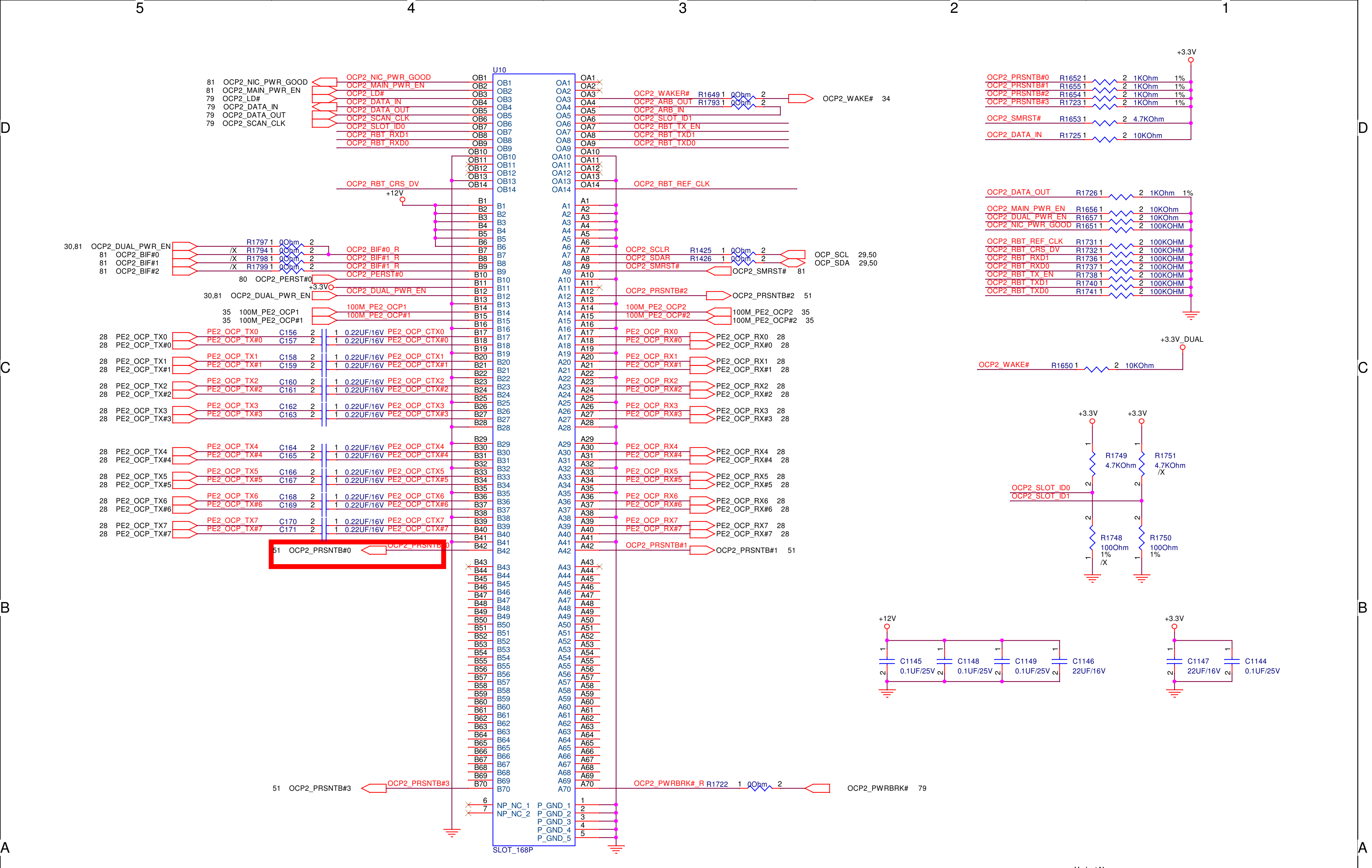
5
4
3
2
1
D
C
B
A
U10
SLOT_168P
81 OCP2_NIC_PWR_GOOD
81 OCP2_MAIN_PWR_EN
79 OCP2_LD#
79 OCP2_DATA_IN
79 OCP2_DATA_OUT
79 OCP2_SCAN_CLK
OCP2_NIC_PWR_GOOD
OCP2_MAIN_PWR_EN
OCP2_LD#
OCP2_DATA_IN
OCP2_DATA_OUT
OCP2_SCAN_CLK
OCP2_SLOT_ID0
OCP2_RBT_RXD1
OCP2_RBT_RXD0
OCP2_RBT_CRS_DV
+12V
OCP2_WAKER#
OCP2_ARB_OUT
OCP2_ARB_IN
OCP2_SLOT_ID1
OCP2_RBT_TX_EN
OCP2_RBT_TXD1
OCP2_RBT_TXD0
OCP2_RBT_REF_CLK
R1649 0Ohm
R1793 0Ohm
OCP2_WAKE# 34
30,81 OCP2_DUAL_PWR_EN
81 OCP2_BIF#0
81 OCP2_BIF#1
81 OCP2_BIF#2
R1797 0Ohm
R1794 0Ohm /X
R1798 0Ohm /X
R1799 0Ohm /X
OCP2_BIF#0_R
OCP2_BIF#1_R
OCP2_BIF#1_R
80 OCP2_PERST#0
OCP2_PERST#0
+3.3V
30,81 OCP2_DUAL_PWR_EN
OCP2_DUAL_PWR_EN
35 100M_PE2_OCP1
35 100M_PE2_OCP#1
100M_PE2_OCP1
100M_PE2_OCP#1
OCP2_SCLR
OCP2_SDAR
OCP2_SMRST#
R1425 0Ohm
R1426 0Ohm
OCP_SCL 29,50
OCP_SDA 29,50
OCP2_SMRST# 81
OCP2_PRSNTB#2
OCP2_PRSNTB#2 51
100M_PE2_OCP2
100M_PE2_OCP#2
100M_PE2_OCP2 35
100M_PE2_OCP#2 35
28 PE2_OCP_TX0
28 PE2_OCP_TX#0
28 PE2_OCP_TX1
28 PE2_OCP_TX#1
28 PE2_OCP_TX2
28 PE2_OCP_TX#2
28 PE2_OCP_TX3
28 PE2_OCP_TX#3
28 PE2_OCP_TX4
28 PE2_OCP_TX#4
28 PE2_OCP_TX5
28 PE2_OCP_TX#5
28 PE2_OCP_TX6
28 PE2_OCP_TX#6
28 PE2_OCP_TX7
28 PE2_OCP_TX#7
C156 C157 C158 C159 C160 C161 C162 C163
C164 C165 C166 C167 C168 C169 C170 C171
0.22UF/16V
PE2_OCP_CTX0
PE2_OCP_CTX#0
PE2_OCP_CTX1
PE2_OCP_CTX#1
PE2_OCP_CTX2
PE2_OCP_CTX#2
PE2_OCP_CTX3
PE2_OCP_CTX#3
PE2_OCP_CTX4
PE2_OCP_CTX#4
PE2_OCP_CTX5
PE2_OCP_CTX#5
PE2_OCP_CTX6
PE2_OCP_CTX#6
PE2_OCP_CTX7
PE2_OCP_CTX#7
PE2_OCP_RX0 28
PE2_OCP_RX#0 28
PE2_OCP_RX1 28
PE2_OCP_RX#1 28
PE2_OCP_RX2 28
PE2_OCP_RX#2 28
PE2_OCP_RX3 28
PE2_OCP_RX#3 28
PE2_OCP_RX4 28
PE2_OCP_RX#4 28
PE2_OCP_RX5 28
PE2_OCP_RX#5 28
PE2_OCP_RX6 28
PE2_OCP_RX#6 28
PE2_OCP_RX7 28
PE2_OCP_RX#7 28
51 OCP2_PRSNTB#0
OCP2_PRSNTB#0
OCP2_PRSNTB#1
OCP2_PRSNTB#1 51
51 OCP2_PRSNTB#3
OCP2_PRSNTB#3
OCP2_PWRBRK#_R
R1722 0Ohm
OCP2_PWRBRK# 79
NP_NC_1
NP_NC_2
P_GND_1
P_GND_2
P_GND_3
P_GND_4
P_GND_5
+3.3V
OCP2_PRSNTB#0 R1652 1KOhm 1%
OCP2_PRSNTB#1 R1655 1KOhm 1%
OCP2_PRSNTB#2 R1654 1KOhm 1%
OCP2_PRSNTB#3 R1723 1KOhm 1%
OCP2_SMRST# R1653 4.7KOhm
OCP2_DATA_IN R1725 10KOhm
OCP2_DATA_OUT R1726 1KOhm 1%
OCP2_MAIN_PWR_EN R1656 10KOhm
OCP2_DUAL_PWR_EN R1657 10KOhm
OCP2_NIC_PWR_GOOD R1651 100KOhm
OCP2_RBT_REF_CLK R1731 100KOHM
OCP2_RBT_CRS_DV R1732 100KOHM
OCP2_RBT_RXD1 R1736 100KOHM
OCP2_RBT_RXD0 R1737 100KOHM
OCP2_RBT_TX_EN R1738 100KOHM
OCP2_RBT_TXD1 R1740 100KOHM
OCP2_RBT_TXD0 R1741 100KOHM
+3.3V_DUAL
OCP2_WAKE# R1650 10KOhm
+3.3V
+3.3V
R1749 4.7KOhm
R1751 4.7KOhm /X
OCP2_SLOT_ID0
OCP2_SLOT_ID1
R1748 100Ohm 1% /X
R1750 100Ohm 1%
+12V
C1145 0.1UF/25V
C1148 0.1UF/25V
C1149 0.1UF/25V
C1146 22UF/16V
+3.3V
C1147 22UF/16V
C1144 0.1UF/25V

<Variant Name>

PEGATRON Title : 030 PCIE2 X8 MUX O

PEGATRON PROPRIETARY AND CONFIDENTIAL

PEGATRON CORPORATION Engineer: *Ryan2_Wang*

Size	Project Name	Rev
A3	CLCL-N	1.00

Date: Tuesday, November 27, 2018 Sheet 30 of 110

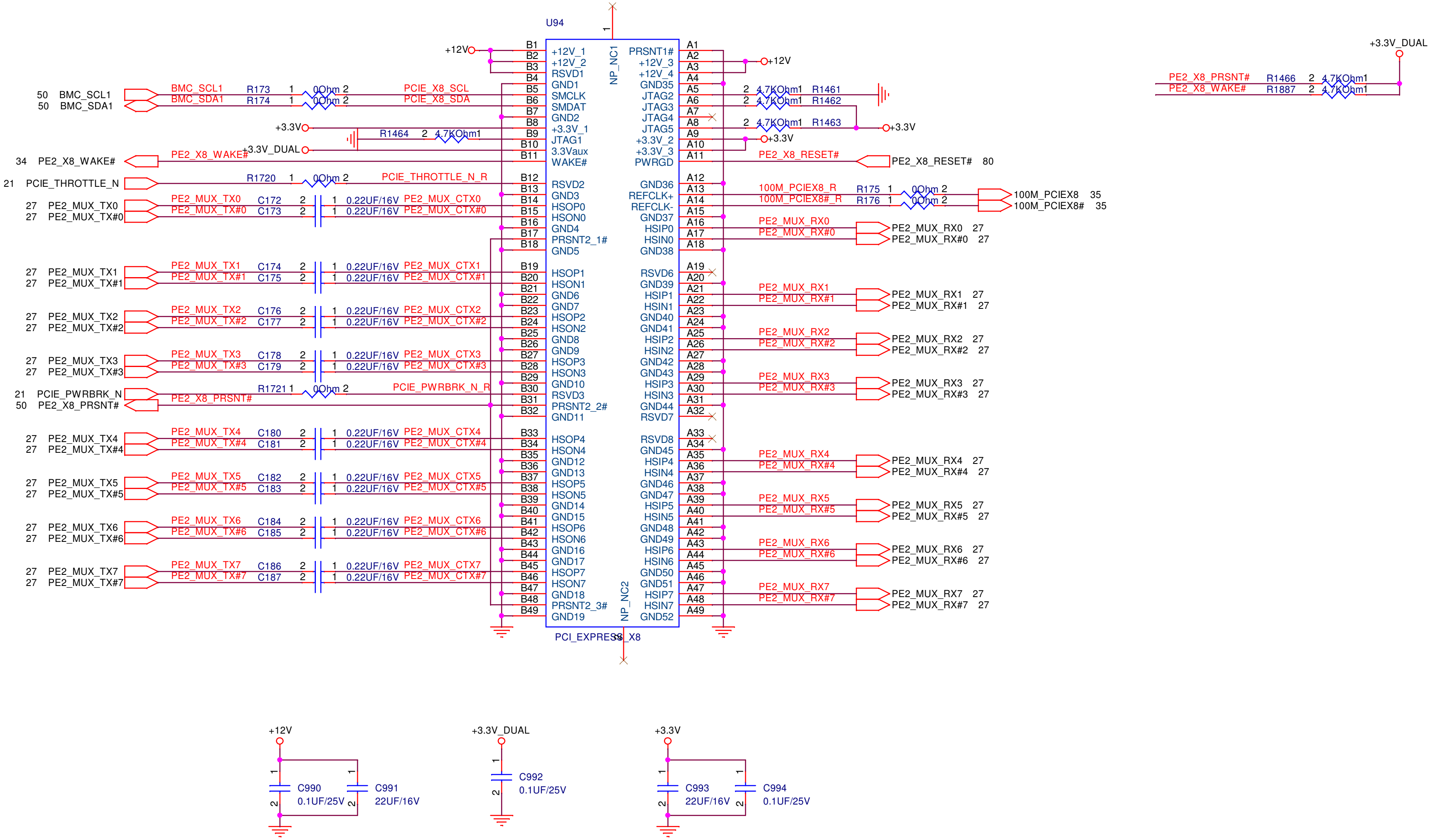
U94
PCI_EXPRESS_X8
+12V
+3.3V_DUAL
+3.3V
NP_NC1
NP_NC2
B1 +12V_1
B2 +12V_2
B3 RSVD1
B4 GND1
B5 SMCLK
B6 SMDAT
B7 GND2
B8 +3.3V_1
B9 JTAG1
B10 3.3Vaux
B11 WAKE#
B12 RSVD2
B13 GND3
B14 HSOP0
B15 HSON0
B16 GND4
B17 PRSNT2_1#
B18 GND5
B19 HSOP1
B20 HSON1
B21 GND6
B22 GND7
B23 HSOP2
B24 HSON2
B25 GND8
B26 GND9
B27 HSOP3
B28 HSON3
B29 GND10
B30 RSVD3
B31 PRSNT2_2#
B32 GND11
B33 HSOP4
B34 HSON4
B35 GND12
B36 GND13
B37 HSOP5
B38 HSON5
B39 GND14
B40 GND15
B41 HSOP6
B42 HSON6
B43 GND16
B44 GND17
B45 HSOP7
B46 HSON7
B47 GND18
B48 PRSNT2_3#
B49 GND19
A1 PRSNT1#
A2 +12V_3
A3 +12V_4
A4 GND35
A5 JTAG2
A6 JTAG3
A7 JTAG4
A8 JTAG5
A9 +3.3V_2
A10 +3.3V_3
A11 PWRGD
A12 GND36
A13 REFCLK+
A14 REFCLK-
A15 GND37
A16 HSIP0
A17 HSIN0
A18 GND38
A19 RSVD6
A20 GND39
A21 HSIP1
A22 HSIN1
A23 GND40
A24 GND41
A25 HSIP2
A26 HSIN2
A27 GND42
A28 GND43
A29 HSIP3
A30 HSIN3
A31 GND44
A32 RSVD7
A33 RSVD8
A34 GND45
A35 HSIP4
A36 HSIN4
A37 GND46
A38 GND47
A39 HSIP5
A40 HSIN5
A41 GND48
A42 GND49
A43 HSIP6
A44 HSIN6
A45 GND50
A46 GND51
A47 HSIP7
A48 HSIN7
A49 GND52
50 BMC_SCL1
50 BMC_SDA1
BMC_SCL1 R173 1 0Ohm 2 PCIE_X8_SCL
BMC_SDA1 R174 1 0Ohm 2 PCIE_X8_SDA
R1464 2 4.7KOhm1
34 PE2_X8_WAKE#
21 PCIE_THROTTLE_N
R1720 1 0Ohm 2 PCIE_THROTTLE_N_R
27 PE2_MUX_TX0 C172 2 1 0.22UF/16V PE2_MUX_CTX0
27 PE2_MUX_TX#0 C173 2 1 0.22UF/16V PE2_MUX_CTX#0
27 PE2_MUX_TX1 C174 2 1 0.22UF/16V PE2_MUX_CTX1
27 PE2_MUX_TX#1 C175 2 1 0.22UF/16V PE2_MUX_CTX#1
27 PE2_MUX_TX2 C176 2 1 0.22UF/16V PE2_MUX_CTX2
27 PE2_MUX_TX#2 C177 2 1 0.22UF/16V PE2_MUX_CTX#2
27 PE2_MUX_TX3 C178 2 1 0.22UF/16V PE2_MUX_CTX3
27 PE2_MUX_TX#3 C179 2 1 0.22UF/16V PE2_MUX_CTX#3
21 PCIE_PWRBRK_N R1721 1 0Ohm 2 PCIE_PWRBRK_N_R
50 PE2_X8_PRSNT#
27 PE2_MUX_TX4 C180 2 1 0.22UF/16V PE2_MUX_CTX4
27 PE2_MUX_TX#4 C181 2 1 0.22UF/16V PE2_MUX_CTX#4
27 PE2_MUX_TX5 C182 2 1 0.22UF/16V PE2_MUX_CTX5
27 PE2_MUX_TX#5 C183 2 1 0.22UF/16V PE2_MUX_CTX#5
27 PE2_MUX_TX6 C184 2 1 0.22UF/16V PE2_MUX_CTX6
27 PE2_MUX_TX#6 C185 2 1 0.22UF/16V PE2_MUX_CTX#6
27 PE2_MUX_TX7 C186 2 1 0.22UF/16V PE2_MUX_CTX7
27 PE2_MUX_TX#7 C187 2 1 0.22UF/16V PE2_MUX_CTX#7
2 4.7KOhm1 R1461
2 4.7KOhm1 R1462
2 4.7KOhm1 R1463
PE2_X8_RESET# 80
100M_PCIEX8_R R175 1 0Ohm 2 100M_PCIEX8 35
100M_PCIEX8#_R R176 1 0Ohm 2 100M_PCIEX8# 35
PE2_MUX_RX0 27
PE2_MUX_RX#0 27
PE2_MUX_RX1 27
PE2_MUX_RX#1 27
PE2_MUX_RX2 27
PE2_MUX_RX#2 27
PE2_MUX_RX3 27
PE2_MUX_RX#3 27
PE2_MUX_RX4 27
PE2_MUX_RX#4 27
PE2_MUX_RX5 27
PE2_MUX_RX#5 27
PE2_MUX_RX6 27
PE2_MUX_RX#6 27
PE2_MUX_RX7 27
PE2_MUX_RX#7 27
PE2_X8_PRSNT# R1466 2 4.7KOhm1
PE2_X8_WAKE# R1887 2 4.7KOhm1
C990 0.1UF/25V
C991 22UF/16V
C992 0.1UF/25V
C993 22UF/16V
C994 0.1UF/25V

<Variant Name>

PEGATRON **Title :** 031 PCIE2 X8 MUX S

PEGATRON PROPRIETARY AND CONFIDENTIAL

PEGATRON CORPORATION **Engineer:** *Ryan2_Wang*

Size	Project Name	Rev
A3	CLCL-N	1.00

Date: Tuesday, November 27, 2018 Sheet 31 of 110

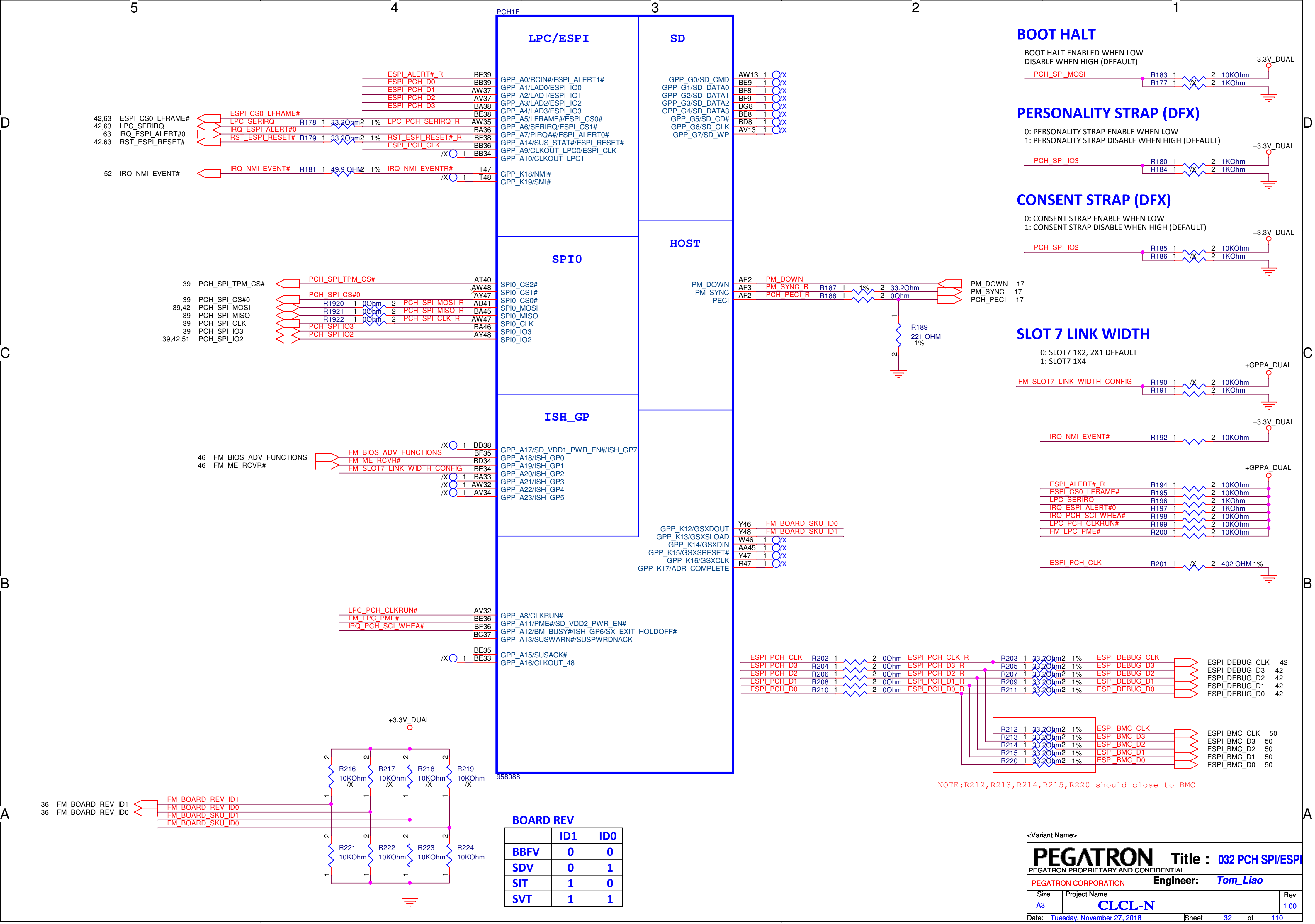
PCH1F
LPC/ESPI
SD
SPI0
HOST
ISH_GP
ESPI_ALERT#_R BE39 GPP_A0/RCIN#/ESPI_ALERT1#
ESPI_PCH_D0 BB39 GPP_A1/LAD0/ESPI_IO0
ESPI_PCH_D1 AW37 GPP_A2/LAD1/ESPI_IO1
ESPI_PCH_D2 AV37 GPP_A3/LAD2/ESPI_IO2
ESPI_PCH_D3 BA38 GPP_A4/LAD3/ESPI_IO3
42,63 ESPI_CS0_LFRAME# ESPI_CS0_LFRAME# BE38 GPP_A5/LFRAME#/ESPI_CS0#
42,63 LPC_SERIRQ LPC_SERIRQ R178 1 33.2Ohm 2 1% LPC_PCH_SERIRQ_R AW35 GPP_A6/SERIRQ/ESPI_CS1#
63 IRQ_ESPI_ALERT#0 IRQ_ESPI_ALERT#0 BA36 GPP_A7/PIRQA#/ESPI_ALERT0#
42,63 RST_ESPI_RESET# RST_ESPI_RESET# R179 1 33.2Ohm 2 1% RST_ESPI_RESET#_R BF38 GPP_A14/SUS_STAT#/ESPI_RESET#
ESPI_PCH_CLK BB36 GPP_A9/CLKOUT_LPC0/ESPI_CLK
/X 1 BB34 GPP_A10/CLKOUT_LPC1
52 IRQ_NMI_EVENT# IRQ_NMI_EVENT# R181 1 49.9 OHM 2 1% IRQ_NMI_EVENTR# T47 GPP_K18/NMI#
/X 1 T48 GPP_K19/SMI#
GPP_G0/SD_CMD AW13 1 X
GPP_G1/SD_DATA0 BE9 1 X
GPP_G2/SD_DATA1 BF8 1 X
GPP_G3/SD_DATA2 BF9 1 X
GPP_G4/SD_DATA3 BG8 1 X
GPP_G5/SD_CD# BE8 1 X
GPP_G6/SD_CLK BD8 1 X
GPP_G7/SD_WP AV13 1 X
39 PCH_SPI_TPM_CS# PCH_SPI_TPM_CS# AT40 SPI0_CS2#
AW48 SPI0_CS1#
39 PCH_SPI_CS#0 PCH_SPI_CS#0 AY47 SPI0_CS0#
39,42 PCH_SPI_MOSI R1920 1 0Ohm 2 PCH_SPI_MOSI_R AU41 SPI0_MOSI
39 PCH_SPI_MISO R1921 1 0Ohm 2 PCH_SPI_MISO_R BA45 SPI0_MISO
39 PCH_SPI_CLK R1922 1 0Ohm 2 PCH_SPI_CLK_R AW47 SPI0_CLK
39 PCH_SPI_IO3 PCH_SPI_IO3 BA46 SPI0_IO3
39,42,51 PCH_SPI_IO2 PCH_SPI_IO2 AY48 SPI0_IO2
PM_DOWN AE2 PM_DOWN
PM_SYNC AF3 PM_SYNC_R R187 1 1% 2 33.2Ohm
PECI AF2 PCH_PECI_R R188 1 2 0Ohm
PM_DOWN 17
PM_SYNC 17
PCH_PECI 17
R189 1 2 221 OHM 1%
/X 1 BD38 GPP_A17/SD_VDD1_PWR_EN#/ISH_GP7
46 FM_BIOS_ADV_FUNCTIONS FM_BIOS_ADV_FUNCTIONS BF35 GPP_A18/ISH_GP0
46 FM_ME_RCVR# FM_ME_RCVR# BD34 GPP_A19/ISH_GP1
FM_SLOT7_LINK_WIDTH_CONFIG BE34 GPP_A20/ISH_GP2
/X 1 BA33 GPP_A21/ISH_GP3
/X 1 AW32 GPP_A22/ISH_GP4
/X 1 AV34 GPP_A23/ISH_GP5
GPP_K12/GSXDOUT Y46 FM_BOARD_SKU_ID0
GPP_K13/GSXSLOAD Y48 FM_BOARD_SKU_ID1
GPP_K14/GSXDIN W46 1 X
GPP_K15/GSXSRESET# AA45 1 X
GPP_K16/GSXCLK Y47 1 X
GPP_K17/ADR_COMPLETE R47 1 X
LPC_PCH_CLKRUN# AV32 GPP_A8/CLKRUN#
FM_LPC_PME# BE36 GPP_A11/PME#/SD_VDD2_PWR_EN#
IRQ_PCH_SCI_WHEA# BF36 GPP_A12/BM_BUSY#/ISH_GP6/SX_EXIT_HOLDOFF#
BC37 GPP_A13/SUSWARN#/SUSPWRDNACK
BE35 GPP_A15/SUSACK#
/X 1 BE33 GPP_A16/CLKOUT_48
958988
+3.3V_DUAL
PCH_SPI_MOSI R183 1 2 10KOhm
R177 1 /X 2 1KOhm
PCH_SPI_IO3 R180 1 2 1KOhm
R184 1 /X 2 1KOhm
PCH_SPI_IO2 R185 1 2 10KOhm
R186 1 /X 2 1KOhm
+GPPA_DUAL
FM_SLOT7_LINK_WIDTH_CONFIG R190 1 /X 2 10KOhm
R191 1 2 1KOhm
IRQ_NMI_EVENT# R192 1 2 10KOhm
ESPI_ALERT#_R R194 1 2 10KOhm
ESPI_CS0_LFRAME# R195 1 2 10KOhm
LPC_SERIRQ R196 1 2 1KOhm
IRQ_ESPI_ALERT#0 R197 1 2 1KOhm
IRQ_PCH_SCI_WHEA# R198 1 2 10KOhm
LPC_PCH_CLKRUN# R199 1 2 10KOhm
FM_LPC_PME# R200 1 2 10KOhm
ESPI_PCH_CLK R201 1 /X 2 402 OHM 1%
ESPI_PCH_CLK R202 1 2 0Ohm ESPI_PCH_CLK_R R203 1 33.2Ohm 2 1% ESPI_DEBUG_CLK
ESPI_PCH_D3 R204 1 2 0Ohm ESPI_PCH_D3_R R205 1 33.2Ohm 2 1% ESPI_DEBUG_D3
ESPI_PCH_D2 R206 1 2 0Ohm ESPI_PCH_D2_R R207 1 33.2Ohm 2 1% ESPI_DEBUG_D2
ESPI_PCH_D1 R208 1 2 0Ohm ESPI_PCH_D1_R R209 1 33.2Ohm 2 1% ESPI_DEBUG_D1
ESPI_PCH_D0 R210 1 2 0Ohm ESPI_PCH_D0_R R211 1 33.2Ohm 2 1% ESPI_DEBUG_D0
ESPI_DEBUG_CLK 42
ESPI_DEBUG_D3 42
ESPI_DEBUG_D2 42
ESPI_DEBUG_D1 42
ESPI_DEBUG_D0 42
R212 1 33.2Ohm 2 1% ESPI_BMC_CLK
R213 1 33.2Ohm 2 1% ESPI_BMC_D3
R214 1 33.2Ohm 2 1% ESPI_BMC_D2
R215 1 33.2Ohm 2 1% ESPI_BMC_D1
R220 1 33.2Ohm 2 1% ESPI_BMC_D0
ESPI_BMC_CLK 50
ESPI_BMC_D3 50
ESPI_BMC_D2 50
ESPI_BMC_D1 50
ESPI_BMC_D0 50
+3.3V_DUAL
R216 10KOhm /X
R217 10KOhm /X
R218 10KOhm /X
R219 10KOhm /X
36 FM_BOARD_REV_ID1 FM_BOARD_REV_ID1
36 FM_BOARD_REV_ID0 FM_BOARD_REV_ID0
FM_BOARD_SKU_ID1
FM_BOARD_SKU_ID0
R221 10KOhm
R222 10KOhm
R223 10KOhm
R224 10KOhm
5 4 3 2 1
D C B A

BOOT HALT

BOOT HALT ENABLED WHEN LOW
DISABLE WHEN HIGH (DEFAULT)

PERSONALITY STRAP (DFX)

0: PERSONALITY STRAP ENABLE WHEN LOW
1: PERSONALITY STRAP DISABLE WHEN HIGH (DEFAULT)

CONSENT STRAP (DFX)

0: CONSENT STRAP ENABLE WHEN LOW
1: CONSENT STRAP DISABLE WHEN HIGH (DEFAULT)

SLOT 7 LINK WIDTH

0: SLOT7 1X2, 2X1 DEFAULT
1: SLOT7 1X4

NOTE:R212,R213,R214,R215,R220 should close to BMC

BOARD REV

	ID1	ID0
BBFV	0	0
SDV	0	1
SIT	1	0
SVT	1	1

<Variant Name>

PEGATRON
PEGATRON PROPRIETARY AND CONFIDENTIAL
PEGATRON CORPORATION
Title : 032 PCH SPI/ESPI
Engineer: Tom_Liao
Size A3
Project Name CLCL-N
Rev 1.00
Date: Tuesday, November 27, 2018
Sheet 32 of 110

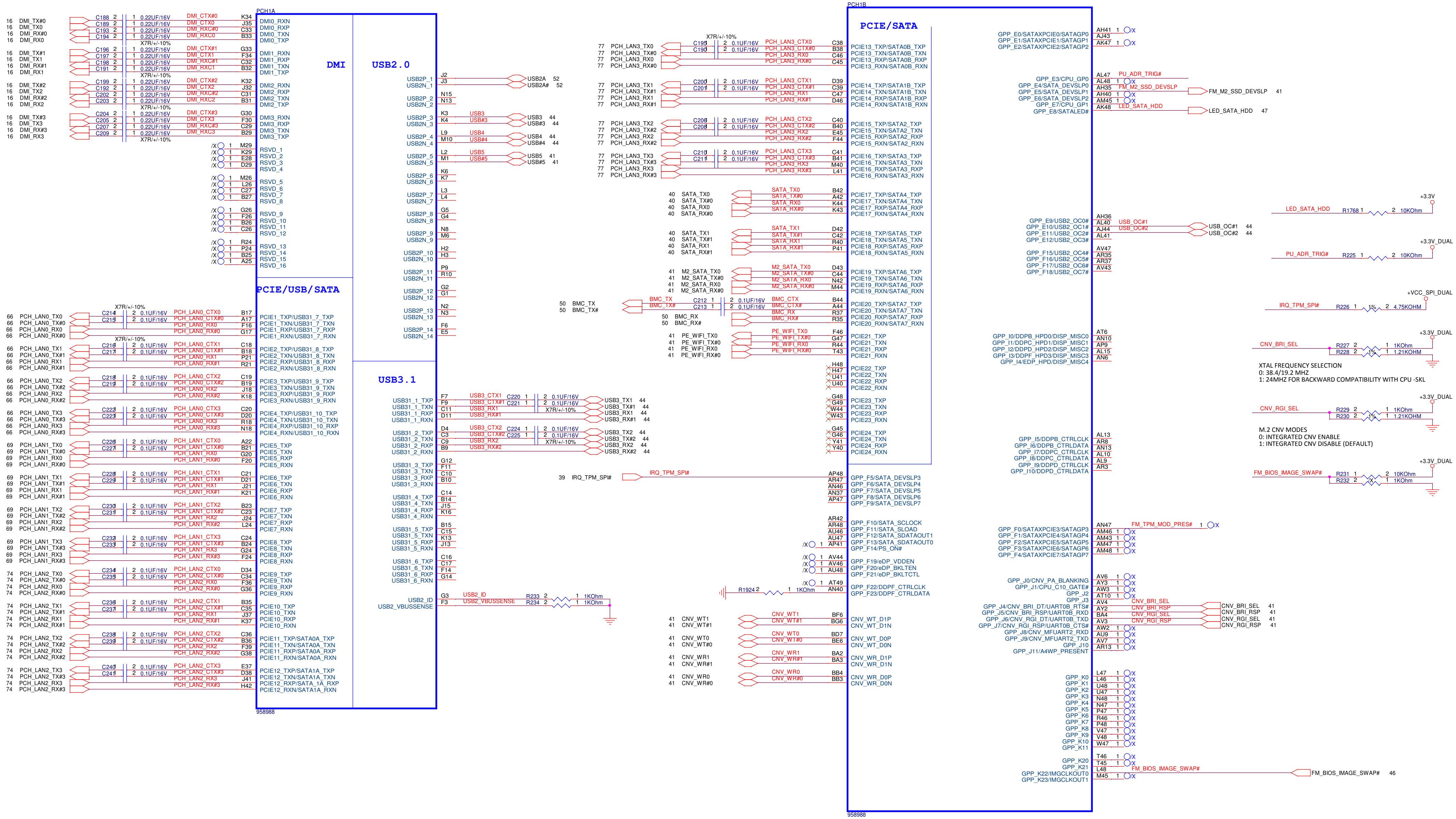
PCH1A
DMI
USB2.0
PCIE/USB/SATA
USB3.1
958988
16 DMI_TX#0 C188 2 1 0.22UF/16V DMI_CTX#0 K34 DMI0_RXN
16 DMI_TX0 C189 2 1 0.22UF/16V DMI_CTX0 J35 DMI0_RXP
16 DMI_RX#0 C193 2 1 0.22UF/16V DMI_RXC#0 C33 DMI0_TXN
16 DMI_RX0 C194 2 1 0.22UF/16V DMI_RXC0 B33 DMI0_TXP
X7R/+/-10%
16 DMI_TX#1 C196 2 1 0.22UF/16V DMI_CTX#1 G33 DMI1_RXN
16 DMI_TX1 C197 2 1 0.22UF/16V DMI_CTX1 F34 DMI1_RXP
16 DMI_RX#1 C198 2 1 0.22UF/16V DMI_RXC#1 C32 DMI1_TXN
16 DMI_RX1 C191 2 1 0.22UF/16V DMI_RXC1 B32 DMI1_TXP
X7R/+/-10%
16 DMI_TX#2 C199 2 1 0.22UF/16V DMI_CTX#2 K32 DMI2_RXN
16 DMI_TX2 C192 2 1 0.22UF/16V DMI_CTX2 J32 DMI2_RXP
16 DMI_RX#2 C202 2 1 0.22UF/16V DMI_RXC#2 C31 DMI2_TXN
16 DMI_RX2 C203 2 1 0.22UF/16V DMI_RXC2 B31 DMI2_TXP
X7R/+/-10%
16 DMI_TX#3 C204 2 1 0.22UF/16V DMI_CTX#3 G30 DMI3_RXN
16 DMI_TX3 C205 2 1 0.22UF/16V DMI_CTX3 F30 DMI3_RXP
16 DMI_RX#3 C207 2 1 0.22UF/16V DMI_RXC#3 C29 DMI3_TXN
16 DMI_RX3 C209 2 1 0.22UF/16V DMI_RXC3 B29 DMI3_TXP
X7R/+/-10%
/X 1 M29 RSVD_1
/X 1 K29 RSVD_2
/X 1 E28 RSVD_3
/X 1 D29 RSVD_4
/X 1 M26 RSVD_5
/X 1 L26 RSVD_6
/X 1 C27 RSVD_7
/X 1 B27 RSVD_8
/X 1 G26 RSVD_9
/X 1 F26 RSVD_10
/X 1 B26 RSVD_11
/X 1 C26 RSVD_12
/X 1 R24 RSVD_13
/X 1 P24 RSVD_14
/X 1 B25 RSVD_15
/X 1 A25 RSVD_16
X7R/+/-10%
66 PCH_LAN0_TX0 C214 1 2 0.1UF/16V PCH_LAN0_CTX0 B17 PCIE1_TXP/USB31_7_TXP
66 PCH_LAN0_TX#0 C215 1 2 0.1UF/16V PCH_LAN0_CTX#0 A17 PCIE1_TXN/USB31_7_TXN
66 PCH_LAN0_RX0 PCH_LAN0_RX0 F16 PCIE1_RXP/USB31_7_RXP
66 PCH_LAN0_RX#0 PCH_LAN0_RX#0 G17 PCIE1_RXN/USB31_7_RXN
X7R/+/-10%
66 PCH_LAN0_TX1 C216 1 2 0.1UF/16V PCH_LAN0_CTX1 C18 PCIE2_TXP/USB31_8_TXP
66 PCH_LAN0_TX#1 C217 1 2 0.1UF/16V PCH_LAN0_CTX#1 B18 PCIE2_TXN/USB31_8_TXN
66 PCH_LAN0_RX1 PCH_LAN0_RX1 P21 PCIE2_RXP/USB31_8_RXP
66 PCH_LAN0_RX#1 PCH_LAN0_RX#1 R21 PCIE2_RXN/USB31_8_RXN
66 PCH_LAN0_TX2 C218 1 2 0.1UF/16V PCH_LAN0_CTX2 C19 PCIE3_TXP/USB31_9_TXP
66 PCH_LAN0_TX#2 C219 1 2 0.1UF/16V PCH_LAN0_CTX#2 B19 PCIE3_TXN/USB31_9_TXN
66 PCH_LAN0_RX2 PCH_LAN0_RX2 J18 PCIE3_RXP/USB31_9_RXP
66 PCH_LAN0_RX#2 PCH_LAN0_RX#2 K18 PCIE3_RXN/USB31_9_RXN
66 PCH_LAN0_TX3 C222 1 2 0.1UF/16V PCH_LAN0_CTX3 C20 PCIE4_TXP/USB31_10_TXP
66 PCH_LAN0_TX#3 C223 1 2 0.1UF/16V PCH_LAN0_CTX#3 D20 PCIE4_TXN/USB31_10_TXN
66 PCH_LAN0_RX3 PCH_LAN0_RX3 R18 PCIE4_RXP/USB31_10_RXP
66 PCH_LAN0_RX#3 PCH_LAN0_RX#3 N18 PCIE4_RXN/USB31_10_RXN
69 PCH_LAN1_TX0 C226 1 2 0.1UF/16V PCH_LAN1_CTX0 A22 PCIE5_TXP
69 PCH_LAN1_TX#0 C227 1 2 0.1UF/16V PCH_LAN1_CTX#0 B21 PCIE5_TXN
69 PCH_LAN1_RX0 PCH_LAN1_RX0 G20 PCIE5_RXP
69 PCH_LAN1_RX#0 PCH_LAN1_RX#0 F20 PCIE5_RXN
69 PCH_LAN1_TX1 C228 1 2 0.1UF/16V PCH_LAN1_CTX1 C21 PCIE6_TXP
69 PCH_LAN1_TX#1 C229 1 2 0.1UF/16V PCH_LAN1_CTX#1 D21 PCIE6_TXN
69 PCH_LAN1_RX1 PCH_LAN1_RX1 J21 PCIE6_RXP
69 PCH_LAN1_RX#1 PCH_LAN1_RX#1 K21 PCIE6_RXN
69 PCH_LAN1_TX2 C230 1 2 0.1UF/16V PCH_LAN1_CTX2 B23 PCIE7_TXP
69 PCH_LAN1_TX#2 C231 1 2 0.1UF/16V PCH_LAN1_CTX#2 C23 PCIE7_TXN
69 PCH_LAN1_RX2 PCH_LAN1_RX2 J24 PCIE7_RXP
69 PCH_LAN1_RX#2 PCH_LAN1_RX#2 L24 PCIE7_RXN
69 PCH_LAN1_TX3 C232 1 2 0.1UF/16V PCH_LAN1_CTX3 C24 PCIE8_TXP
69 PCH_LAN1_TX#3 C233 1 2 0.1UF/16V PCH_LAN1_CTX#3 B24 PCIE8_TXN
69 PCH_LAN1_RX3 PCH_LAN1_RX3 G24 PCIE8_RXP
69 PCH_LAN1_RX#3 PCH_LAN1_RX#3 F24 PCIE8_RXN
74 PCH_LAN2_TX0 C234 1 2 0.1UF/16V PCH_LAN2_CTX0 D34 PCIE9_TXP
74 PCH_LAN2_TX#0 C235 1 2 0.1UF/16V PCH_LAN2_CTX#0 C34 PCIE9_TXN
74 PCH_LAN2_RX0 PCH_LAN2_RX0 F36 PCIE9_RXP
74 PCH_LAN2_RX#0 PCH_LAN2_RX#0 G36 PCIE9_RXN
74 PCH_LAN2_TX1 C236 1 2 0.1UF/16V PCH_LAN2_CTX1 B35 PCIE10_TXP
74 PCH_LAN2_TX#1 C237 1 2 0.1UF/16V PCH_LAN2_CTX#1 C35 PCIE10_TXN
74 PCH_LAN2_RX1 PCH_LAN2_RX1 J37 PCIE10_RXP
74 PCH_LAN2_RX#1 PCH_LAN2_RX#1 K37 PCIE10_RXN
74 PCH_LAN2_TX2 C238 1 2 0.1UF/16V PCH_LAN2_CTX2 C36 PCIE11_TXP/SATA0A_TXP
74 PCH_LAN2_TX#2 C239 1 2 0.1UF/16V PCH_LAN2_CTX#2 B36 PCIE11_TXN/SATA0A_TXN
74 PCH_LAN2_RX2 PCH_LAN2_RX2 F39 PCIE11_RXP/SATA0A_RXP
74 PCH_LAN2_RX#2 PCH_LAN2_RX#2 G38 PCIE11_RXN/SATA0A_RXN
74 PCH_LAN2_TX3 C240 1 2 0.1UF/16V PCH_LAN2_CTX3 E37 PCIE12_TXP/SATA1A_TXP
74 PCH_LAN2_TX#3 C241 1 2 0.1UF/16V PCH_LAN2_CTX#3 D38 PCIE12_TXN/SATA1A_TXN
74 PCH_LAN2_RX3 PCH_LAN2_RX3 J41 PCIE12_RXP/SATA_1A_RXP
74 PCH_LAN2_RX#3 PCH_LAN2_RX#3 H42 PCIE12_RXN/SATA1A_RXN
USB2P_1 J2 USB2A 52
USB2N_1 J3 USB2A# 52
USB2P_2 N15
USB2N_2 N13
USB2P_3 K3 USB3 USB3 44
USB2N_3 K4 USB#3 USB#3 44
USB2P_4 L9 USB4 USB4 44
USB2N_4 M10 USB#4 USB#4 44
USB2P_5 L2 USB5 USB5 41
USB2N_5 M1 USB#5 USB#5 41
USB2P_6 K6
USB2N_6 K7
USB2P_7 L3
USB2N_7 L4
USB2P_8 G5
USB2N_8 G4
USB2P_9 N8
USB2N_9 M6
USB2P_10 H2
USB2N_10 H3
USB2P_11 P9
USB2N_11 R10
USB2P_12 G2
USB2N_12 G1
USB2P_13 N2
USB2N_13 N3
USB2P_14 F6
USB2N_14 E5
USB31_1_TXP F7 USB3_CTX1 C220 1 2 0.1UF/16V USB3_TX1 44
USB31_1_TXN F9 USB3_CTX#1 C221 1 2 0.1UF/16V USB3_TX#1 44
USB31_1_RXP C11 USB3_RX1 USB3_RX1 44
USB31_1_RXN D11 USB3_RX#1 USB3_RX#1 44
X7R/+/-10%
USB31_2_TXP D4 USB3_CTX2 C224 1 2 0.1UF/16V USB3_TX2 44
USB31_2_TXN C3 USB3_CTX#2 C225 1 2 0.1UF/16V USB3_TX#2 44
USB31_2_RXP C9 USB3_RX2 USB3_RX2 44
USB31_2_RXN B9 USB3_RX#2 USB3_RX#2 44
X7R/+/-10%
USB31_3_TXP G12
USB31_3_TXN F11
USB31_3_RXP C10
USB31_3_RXN B10
USB31_4_TXP C14
USB31_4_TXN B14
USB31_4_RXP J15
USB31_4_RXN K16
USB31_5_TXP B15
USB31_5_TXN C15
USB31_5_RXP K13
USB31_5_RXN J13
USB31_6_TXP C16
USB31_6_TXN C17
USB31_6_RXP F14
USB31_6_RXN G14
USB2_ID G3 USB2_ID R233 2 1 1KOhm
USB2_VBUSSENSE F3 USB2_VBUSSENSE R234 2 1 1KOhm
PCH1B
PCIE/SATA
X7R/+/-10%
77 PCH_LAN3_TX0 C195 1 2 0.1UF/16V PCH_LAN3_CTX0 C38 PCIE13_TXP/SATA0B_TXP
77 PCH_LAN3_TX#0 C190 1 2 0.1UF/16V PCH_LAN3_CTX#0 B38 PCIE13_TXN/SATA0B_TXN
77 PCH_LAN3_RX0 PCH_LAN3_RX0 C46 PCIE13_RXP/SATA0B_RXP
77 PCH_LAN3_RX#0 PCH_LAN3_RX#0 C45 PCIE13_RXN/SATA0B_RXN
77 PCH_LAN3_TX1 C200 1 2 0.1UF/16V PCH_LAN3_CTX1 D39 PCIE14_TXP/SATA1B_TXP
77 PCH_LAN3_TX#1 C201 1 2 0.1UF/16V PCH_LAN3_CTX#1 C39 PCIE14_TXN/SATA1B_TXN
77 PCH_LAN3_RX1 PCH_LAN3_RX1 C47 PCIE14_RXP/SATA1B_RXP
77 PCH_LAN3_RX#1 PCH_LAN3_RX#1 D46 PCIE14_RXN/SATA1B_RXN
77 PCH_LAN3_TX2 C206 1 2 0.1UF/16V PCH_LAN3_CTX2 C40 PCIE15_TXP/SATA2_TXP
77 PCH_LAN3_TX#2 C208 1 2 0.1UF/16V PCH_LAN3_CTX#2 B40 PCIE15_TXN/SATA2_TXN
77 PCH_LAN3_RX2 PCH_LAN3_RX2 E45 PCIE15_RXP/SATA2_RXP
77 PCH_LAN3_RX#2 PCH_LAN3_RX#2 F44 PCIE15_RXN/SATA2_RXN
77 PCH_LAN3_TX3 C210 1 2 0.1UF/16V PCH_LAN3_CTX3 C41 PCIE16_TXP/SATA3_TXP
77 PCH_LAN3_TX#3 C211 1 2 0.1UF/16V PCH_LAN3_CTX#3 B41 PCIE16_TXN/SATA3_TXN
77 PCH_LAN3_RX3 PCH_LAN3_RX3 M40 PCIE16_RXP/SATA3_RXP
77 PCH_LAN3_RX#3 PCH_LAN3_RX#3 L41 PCIE16_RXN/SATA3_RXN
40 SATA_TX0 SATA_TX0 B42 PCIE17_TXP/SATA4_TXP
40 SATA_TX#0 SATA_TX#0 A42 PCIE17_TXN/SATA4_TXN
40 SATA_RX0 SATA_RX0 K44 PCIE17_RXP/SATA4_RXP
40 SATA_RX#0 SATA_RX#0 K43 PCIE17_RXN/SATA4_RXN
40 SATA_TX1 SATA_TX1 D42 PCIE18_TXP/SATA5_TXP
40 SATA_TX#1 SATA_TX#1 C42 PCIE18_TXN/SATA5_TXN
40 SATA_RX1 SATA_RX1 R40 PCIE18_RXP/SATA5_RXP
40 SATA_RX#1 SATA_RX#1 P41 PCIE18_RXN/SATA5_RXN
41 M2_SATA_TX0 M2_SATA_TX0 D43 PCIE19_TXP/SATA6_TXP
41 M2_SATA_TX#0 M2_SATA_TX#0 C44 PCIE19_TXN/SATA6_TXN
41 M2_SATA_RX0 M2_SATA_RX0 N42 PCIE19_RXP/SATA6_RXP
41 M2_SATA_RX#0 M2_SATA_RX#0 M44 PCIE19_RXN/SATA6_RXN
50 BMC_TX BMC_TX C212 1 2 0.1UF/16V BMC_CTX B44 PCIE20_TXP/SATA7_TXP
50 BMC_TX# BMC_TX# C213 1 2 0.1UF/16V BMC_CTX# A44 PCIE20_TXN/SATA7_TXN
50 BMC_RX BMC_RX R37 PCIE20_RXP/SATA7_RXP
50 BMC_RX# BMC_RX# R35 PCIE20_RXN/SATA7_RXN
41 PE_WIFI_TX0 PE_WIFI_TX0 F46 PCIE21_TXP
41 PE_WIFI_TX#0 PE_WIFI_TX#0 G47 PCIE21_TXN
41 PE_WIFI_RX0 PE_WIFI_RX0 R44 PCIE21_RXP
41 PE_WIFI_RX#0 PE_WIFI_RX#0 T43 PCIE21_RXN
H48 PCIE22_TXP
H47 PCIE22_TXN
U41 PCIE22_RXP
U40 PCIE22_RXN
G48 PCIE23_TXP
G49 PCIE23_TXN
W44 PCIE23_RXP
W43 PCIE23_RXN
G45 PCIE24_TXP
G46 PCIE24_TXN
Y41 PCIE24_RXP
Y40 PCIE24_RXN
39 IRQ_TPM_SPI# IRQ_TPM_SPI# AP48 GPP_F5/SATA_DEVSLP3
AR47 GPP_F6/SATA_DEVSLP4
AN46 GPP_F7/SATA_DEVSLP5
AN37 GPP_F8/SATA_DEVSLP6
AP47 GPP_F9/SATA_DEVSLP7
AR42 GPP_F10/SATA_SCLOCK
AR48 GPP_F11/SATA_SLOAD
AU46 GPP_F12/SATA_SDATAOUT1
AU47 GPP_F13/SATA_SDATAOUT0
/X 1 AP41 GPP_F14/PS_ON#
/X 1 AV44 GPP_F19/eDP_VDDEN
/X 1 AV46 GPP_F20/eDP_BKLTEN
/X 1 AU48 GPP_F21/eDP_BKLTCTL
/X 1 AT49 GPP_F22/DDPF_CTRLCLK
R1924 2 1 1KOhm AN40 GPP_F23/DDPF_CTRLDATA
41 CNV_WT1 CNV_WT1 BF6 CNV_WT_D1P
41 CNV_WT#1 CNV_WT#1 BG6 CNV_WT_D1N
41 CNV_WT0 CNV_WT0 BD7 CNV_WT_D0P
41 CNV_WT#0 CNV_WT#0 BE6 CNV_WT_D0N
41 CNV_WR1 CNV_WR1 BA2 CNV_WR_D1P
41 CNV_WR#1 CNV_WR#1 BA3 CNV_WR_D1N
41 CNV_WR0 CNV_WR0 BB4 CNV_WR_D0P
41 CNV_WR#0 CNV_WR#0 BB3 CNV_WR_D0N
958988
GPP_E0/SATAXPCIE0/SATAGP0 AH41 1 /X
GPP_E1/SATAXPCIE1/SATAGP1 AJ43
GPP_E2/SATAXPCIE2/SATAGP2 AK47 1 /X
GPP_E3/CPU_GP0 AL47 PU_ADR_TRIG#
GPP_E4/SATA_DEVSLP0 AL48 1 /X
GPP_E5/SATA_DEVSLP1 AH35 FM_M2_SSD_DEVSLP FM_M2_SSD_DEVSLP 41
GPP_E6/SATA_DEVSLP2 AH40 1 /X
GPP_E7/CPU_GP1 AM45 1 /X
GPP_E8/SATALED# AK48 LED_SATA_HDD LED_SATA_HDD 47
GPP_E9/USB2_OC0# AH36
GPP_E10/USB2_OC1# AL40 USB_OC#1 USB_OC#1 44
GPP_E11/USB2_OC2# AJ44 USB_OC#2 USB_OC#2 44
GPP_E12/USB2_OC3# AL41
GPP_F15/USB2_OC4# AV47
GPP_F16/USB2_OC5# AR35
GPP_F17/USB2_OC6# AR37
GPP_F18/USB2_OC7# AV43
GPP_I0/DDPB_HPD0/DISP_MISC0 AT6
GPP_I1/DDPC_HPD1/DISP_MISC1 AN10
GPP_I2/DDPD_HPD2/DISP_MISC2 AP9
GPP_I3/DDPF_HPD3/DISP_MISC3 AL15
GPP_I4/EDP_HPD/DISP_MISC4 AN6
GPP_I5/DDPB_CTRLCLK AL13
GPP_I6/DDPB_CTRLDATA AR8
GPP_I7/DDPC_CTRLCLK AN13
GPP_I8/DDPC_CTRLDATA AL10
GPP_I9/DDPD_CTRLCLK AL9
GPP_I10/DDPD_CTRLDATA AR3
GPP_F0/SATAXPCIE3/SATAGP3 AN47 FM_TPM_MOD_PRES# 1 /X
GPP_F1/SATAXPCIE4/SATAGP4 AM46 1 /X
GPP_F2/SATAXPCIE5/SATAGP5 AM43 1 /X
GPP_F3/SATAXPCIE6/SATAGP6 AM47 1 /X
GPP_F4/SATAXPCIE7/SATAGP7 AM48 1 /X
GPP_J0/CNV_PA_BLANKING AV6 1 /X
GPP_J1/CPU_C10_GATE# AY3 1 /X
GPP_J2 AW3 1 /X
GPP_J3 AT10 1 /X
GPP_J4/CNV_BRI_DT/UART0B_RTS# AV4 CNV_BRI_SEL CNV_BRI_SEL 41
GPP_J5/CNV_BRI_RSP/UART0B_RXD AY2 CNV_BRI_RSP CNV_BRI_RSP 41
GPP_J6/CNV_RGI_DT/UART0B_TXD BA4 CNV_RGI_SEL CNV_RGI_SEL 41
GPP_J7/CNV_RGI_RSP/UART0B_CTS# AV3 CNV_RGI_RSP CNV_RGI_RSP 41
GPP_J8/CNV_MFUART2_RXD AW2 1 /X
GPP_J9/CNV_MFUART2_TXD AU9 1 /X
GPP_J10 AV7 1 /X
GPP_J11/A4WP_PRESENT AR13 1 /X
GPP_K0 L47 1 /X
GPP_K1 L46 1 /X
GPP_K2 U48 1 /X
GPP_K3 U47 1 /X
GPP_K4 N48 1 /X
GPP_K5 N47 1 /X
GPP_K6 P47 1 /X
GPP_K7 R46 1 /X
GPP_K8 P48 1 /X
GPP_K9 V47 1 /X
GPP_K10 V48 1 /X
GPP_K11 W47 1 /X
GPP_K20 T46 1 /X
GPP_K21 T45 1 /X
GPP_K22/IMGCLKOUT0 L48 FM_BIOS_IMAGE_SWAP# FM_BIOS_IMAGE_SWAP# 46
GPP_K23/IMGCLKOUT1 M45 1 /X
+3.3V
LED_SATA_HDD R1768 1 2 10KOhm
+3.3V_DUAL
PU_ADR_TRIG# R225 1 2 10KOhm
+VCC_SPI_DUAL
IRQ_TPM_SPI# R226 1 1% 2 4.75KOHM
+3.3V_DUAL
CNV_BRI_SEL R227 2 1 1KOhm
R228 2 1% 1 1.21KOHM
+3.3V_DUAL
CNV_RGI_SEL R229 2 1 1KOhm
R230 2 1% 1 1.21KOHM
+3.3V_DUAL
FM_BIOS_IMAGE_SWAP# R231 1 2 10KOhm
R232 2 /X 1 1KOhm

XTAL FREQUENCY SELECTION
0: 38.4/19.2 MHZ
1: 24MHZ FOR BACKWARD COMPATIBILITY WITH CPU -SKL

M.2 CNV MODES
0: INTEGRATED CNV ENABLE
1: INTEGRATED CNV DISABLE (DEFAULT)

<Variant Name>

PEGATRON **Title :** 033 PCH DMI/PCIE/SATA/U
PEGATRON PROPRIETARY AND CONFIDENTIAL
PEGATRON CORPORATION **Engineer:** *Tom_Liao*

Size	Project Name	Rev
A2	CLCL-N	1.00

Date: Tuesday, November 27, 2018 Sheet 33 of 110

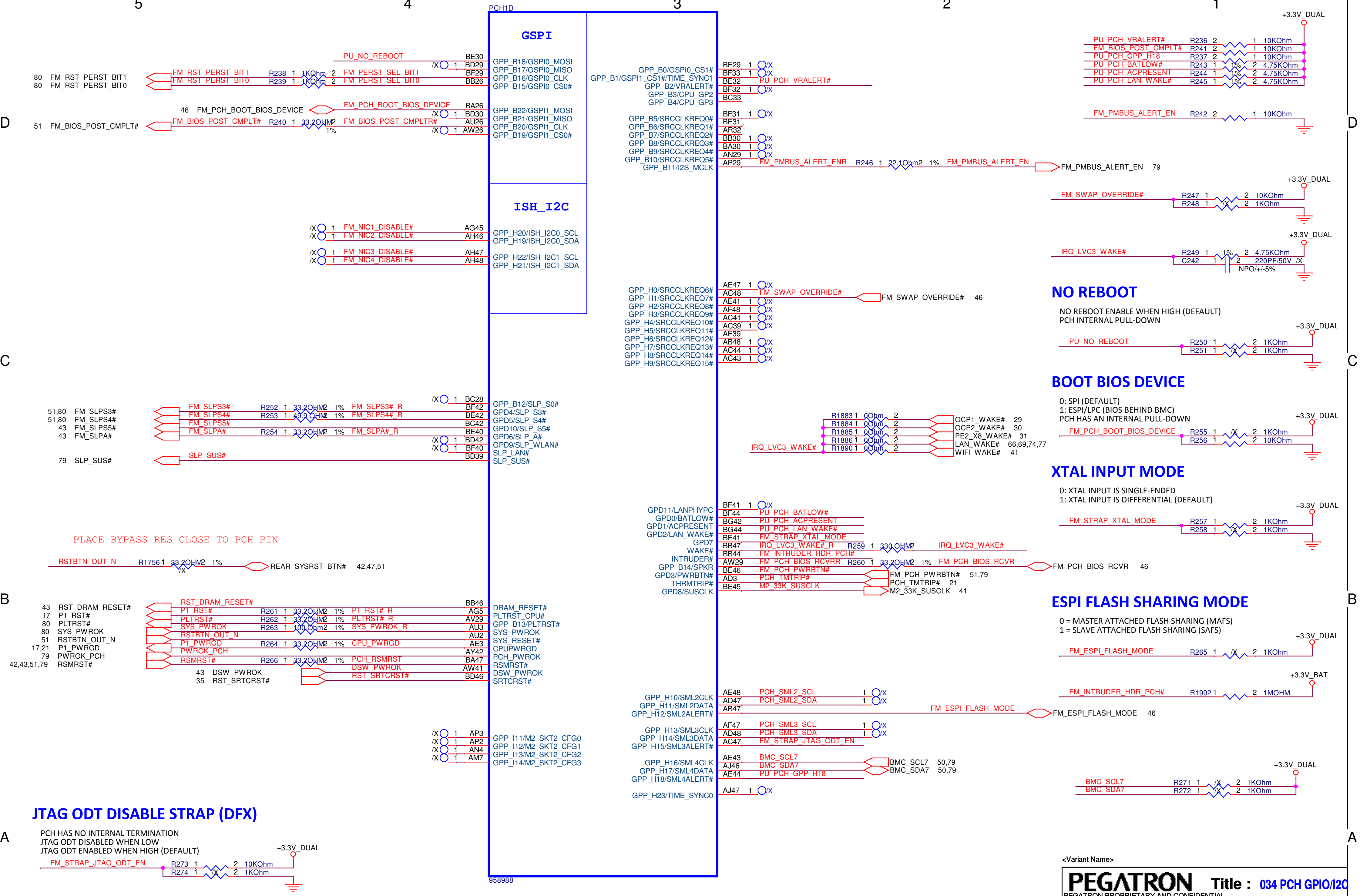
PCH1D
GSPI
ISH_I2C
958988
PU_NO_REBOOT
BE30
GPP_B18/GSPI0_MOSI
BD29
GPP_B17/GSPI0_MISO
BF29
GPP_B16/GSPI0_CLK
BB26
GPP_B15/GSPI0_CS0#
80 FM_RST_PERST_BIT1
80 FM_RST_PERST_BIT0
FM_RST_PERST_BIT1
FM_RST_PERST_BIT0
R238 1 1KOhm 2
R239 1 1KOhm 2
FM_PERST_SEL_BIT1
FM_PERST_SEL_BIT0
46 FM_PCH_BOOT_BIOS_DEVICE
FM_PCH_BOOT_BIOS_DEVICE
BA26
GPP_B22/GSPI1_MOSI
BD30
GPP_B21/GSPI1_MISO
AU26
GPP_B20/GSPI1_CLK
AW26
GPP_B19/GSPI1_CS0#
51 FM_BIOS_POST_CMPLT#
FM_BIOS_POST_CMPLT#
R240 1 33.2OHM 2 1%
FM_BIOS_POST_CMPLTR#
FM_NIC1_DISABLE#
AG45
GPP_H20/ISH_I2C0_SCL
FM_NIC2_DISABLE#
AH46
GPP_H19/ISH_I2C0_SDA
FM_NIC3_DISABLE#
AH47
GPP_H22/ISH_I2C1_SCL
FM_NIC4_DISABLE#
AH48
GPP_H21/ISH_I2C1_SDA
BC28
GPP_B12/SLP_S0#
51,80 FM_SLPS3#
51,80 FM_SLPS4#
43 FM_SLPS5#
43 FM_SLPA#
79 SLP_SUS#
FM_SLPS3#
R252 1 33.2OHM 2 1%
FM_SLPS3#_R
BF42
GPD4/SLP_S3#
FM_SLPS4#
R253 1 49.9 OHM 2 1%
FM_SLPS4#_R
BE42
GPD5/SLP_S4#
FM_SLPS5#
BC42
GPD10/SLP_S5#
FM_SLPA#
R254 1 33.2OHM 2 1%
FM_SLPA#_R
BE40
GPD6/SLP_A#
BD42
GPD9/SLP_WLAN#
BF40
SLP_LAN#
SLP_SUS#
BD39
SLP_SUS#
PLACE BYPASS RES CLOSE TO PCH PIN
RSTBTN_OUT_N
R1756 1 33.2OHM 2 1%
REAR_SYSRST_BTN# 42,47,51
43 RST_DRAM_RESET#
17 P1_RST#
80 PLTRST#
80 SYS_PWROK
51 RSTBTN_OUT_N
17,21 P1_PWRGD
79 PWROK_PCH
42,43,51,79 RSMRST#
43 DSW_PWROK
35 RST_SRTCRST#
RST_DRAM_RESET#
BB46
DRAM_RESET#
P1_RST#
R261 1 33.2OHM 2 1%
P1_RST#_R
AG5
PLTRST_CPU#
PLTRST#
R262 1 33.2OHM 2 1%
PLTRST#_R
AV29
GPP_B13/PLTRST#
SYS_PWROK
R263 1 100 Ohm 2 1%
SYS_PWROK_R
AU3
SYS_PWROK
RSTBTN_OUT_N
AU2
SYS_RESET#
P1_PWRGD
R264 1 33.2OHM 2 1%
CPU_PWRGD
AE3
CPUPWRGD
PWROK_PCH
AY42
PCH_PWROK
RSMRST#
R266 1 33.2OHM 2 1%
PCH_RSMRST
BA47
RSMRST#
DSW_PWROK
AW41
DSW_PWROK
RST_SRTCRST#
BD46
SRTCRST#
AP3
GPP_I11/M2_SKT2_CFG0
AP2
GPP_I12/M2_SKT2_CFG1
AN4
GPP_I13/M2_SKT2_CFG2
AM7
GPP_I14/M2_SKT2_CFG3
GPP_B0/GSPI0_CS1#
BE29
GPP_B1/GSPI1_CS1#/TIME_SYNC1
BF33
GPP_B2/VRALERT#
BE32
PU_PCH_VRALERT#
GPP_B3/CPU_GP2
BF32
GPP_B4/CPU_GP3
BC33
GPP_B5/SRCCLKREQ0#
BF31
GPP_B6/SRCCLKREQ1#
BE31
GPP_B7/SRCCLKREQ2#
AR32
GPP_B8/SRCCLKREQ3#
BB30
GPP_B9/SRCCLKREQ4#
BA30
GPP_B10/SRCCLKREQ5#
AN29
GPP_B11/I2S_MCLK
AP29
FM_PMBUS_ALERT_ENR
R246 1 22.1Ohm 2 1%
FM_PMBUS_ALERT_EN
FM_PMBUS_ALERT_EN 79
GPP_H0/SRCCLKREQ6#
AE47
GPP_H1/SRCCLKREQ7#
AC48
FM_SWAP_OVERRIDE#
FM_SWAP_OVERRIDE# 46
GPP_H2/SRCCLKREQ8#
AE41
GPP_H3/SRCCLKREQ9#
AF48
GPP_H4/SRCCLKREQ10#
AC41
GPP_H5/SRCCLKREQ11#
AC39
GPP_H6/SRCCLKREQ12#
AE39
GPP_H7/SRCCLKREQ13#
AB48
GPP_H8/SRCCLKREQ14#
AC44
GPP_H9/SRCCLKREQ15#
AC43
R1883 1 0Ohm 2
R1884 1 0Ohm 2
R1885 1 0Ohm 2
R1886 1 0Ohm 2
R1890 1 0Ohm 2
IRQ_LVC3_WAKE#
OCP1_WAKE# 29
OCP2_WAKE# 30
PE2_X8_WAKE# 31
LAN_WAKE# 66,69,74,77
WIFI_WAKE# 41
GPD11/LANPHYPC
BF41
GPD0/BATLOW#
BF44
PU_PCH_BATLOW#
GPD1/ACPRESENT
BG42
PU_PCH_ACPRESENT
GPD2/LAN_WAKE#
BG44
PU_PCH_LAN_WAKE#
GPD7
BE41
FM_STRAP_XTAL_MODE
WAKE#
BB47
IRQ_LVC3_WAKE#_R
R259 1 330 OHM 2
IRQ_LVC3_WAKE#
INTRUDER#
BB44
FM_INTRUDER_HDR_PCH#
GPP_B14/SPKR
AW29
FM_PCH_BIOS_RCVRR
R260 1 33.2OHM 2 1%
FM_PCH_BIOS_RCVR
FM_PCH_BIOS_RCVR 46
GPD3/PWRBTN#
BE46
FM_PCH_PWRBTN#
FM_PCH_PWRBTN# 51,79
THRMTRIP#
AD3
PCH_TMTRIP#
PCH_TMTRIP# 21
GPD8/SUSCLK
BE45
M2_33K_SUSCLK
M2_33K_SUSCLK 41
GPP_H10/SML2CLK
AE48
PCH_SML2_SCL
GPP_H11/SML2DATA
AD47
PCH_SML2_SDA
GPP_H12/SML2ALERT#
AB47
FM_ESPI_FLASH_MODE
FM_ESPI_FLASH_MODE 46
GPP_H13/SML3CLK
AF47
PCH_SML3_SCL
GPP_H14/SML3DATA
AD48
PCH_SML3_SDA
GPP_H15/SML3ALERT#
AC47
FM_STRAP_JTAG_ODT_EN
GPP_H16/SML4CLK
AE43
BMC_SCL7
GPP_H17/SML4DATA
AJ46
BMC_SDA7
BMC_SCL7 50,79
BMC_SDA7 50,79
GPP_H18/SML4ALERT#
AE44
PU_PCH_GPP_H18
GPP_H23/TIME_SYNC0
AJ47
+3.3V_DUAL
PU_PCH_VRALERT#
R236 2 1 10KOhm
FM_BIOS_POST_CMPLT#
R241 2 1 10KOhm
PU_PCH_GPP_H18
R237 2 1 10KOhm
PU_PCH_BATLOW#
R243 1 1% 2 4.75KOhm
PU_PCH_ACPRESENT
R244 1 1% 2 4.75KOhm
PU_PCH_LAN_WAKE#
R245 1 1% 2 4.75KOhm
FM_PMBUS_ALERT_EN
R242 2 1 10KOhm
FM_SWAP_OVERRIDE#
R247 1 2 10KOhm
R248 1 2 1KOhm
IRQ_LVC3_WAKE#
R249 1 1% 2 4.75KOhm
C242 1 2 220PF/50V
NPO/+/-5%
PU_NO_REBOOT
R250 1 2 1KOhm
R251 1 2 1KOhm
FM_PCH_BOOT_BIOS_DEVICE
R255 1 2 1KOhm
R256 1 2 10KOhm
FM_STRAP_XTAL_MODE
R257 1 2 1KOhm
R258 1 2 1KOhm
FM_ESPI_FLASH_MODE
R265 1 2 1KOhm
+3.3V_BAT
FM_INTRUDER_HDR_PCH#
R1902 1 2 1MOHM
BMC_SCL7
R271 1 2 1KOhm
BMC_SDA7
R272 1 2 1KOhm
FM_STRAP_JTAG_ODT_EN
R273 1 2 10KOhm
R274 1 2 1KOhm
/X
5
4
3
2
1
D
C
B
A

NO REBOOT

NO REBOOT ENABLE WHEN HIGH (DEFAULT)
PCH INTERNAL PULL-DOWN

BOOT BIOS DEVICE

0: SPI (DEFAULT)
1: ESPI/LPC (BIOS BEHIND BMC)
PCH HAS AN INTERNAL PULL-DOWN

XTAL INPUT MODE

0: XTAL INPUT IS SINGLE-ENDED
1: XTAL INPUT IS DIFFERENTIAL (DEFAULT)

ESPI FLASH SHARING MODE

0 = MASTER ATTACHED FLASH SHARING (MAFS)
1 = SLAVE ATTACHED FLASH SHARING (SAFS)

JTAG ODT DISABLE STRAP (DFX)

PCH HAS NO INTERNAL TERMINATION
JTAG ODT DISABLED WHEN LOW
JTAG ODT ENABLED WHEN HIGH (DEFAULT)

<Variant Name>

PEGATRON **Title :** 034 PCH GPIO/I2C

PEGATRON PROPRIETARY AND CONFIDENTIAL

PEGATRON CORPORATION **Engineer:** *Tom_Liao*

Size	Project Name	Rev
A3	CLCL-N	1.00

Date: Tuesday, November 27, 2018 Sheet 34 of 110

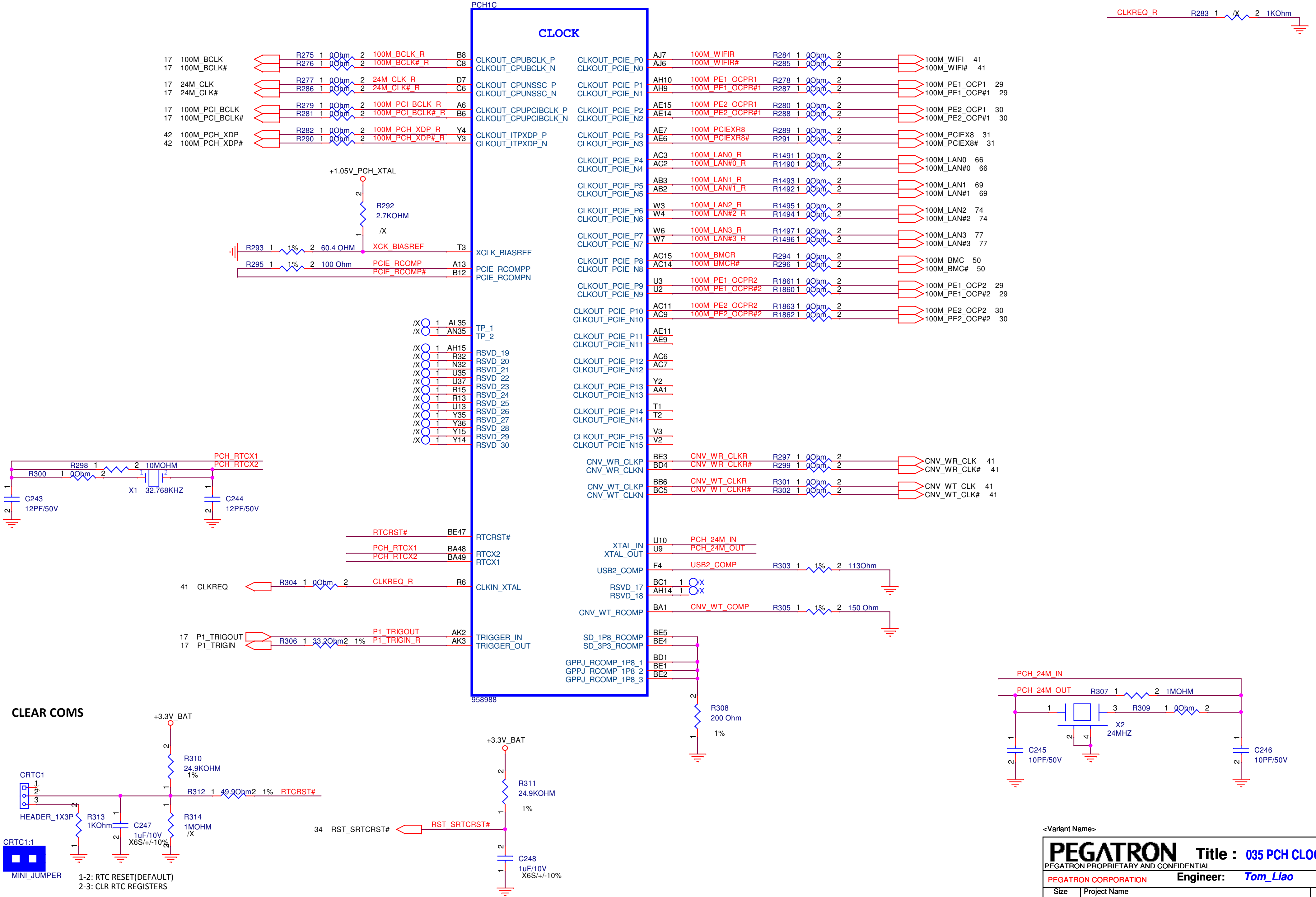
PCH1C
CLOCK
958988
17 100M_BCLK
17 100M_BCLK#
17 24M_CLK
17 24M_CLK#
17 100M_PCI_BCLK
17 100M_PCI_BCLK#
42 100M_PCH_XDP
42 100M_PCH_XDP#
R275 1 0Ohm 2 100M_BCLK_R B8 CLKOUT_CPUBCLK_P
R276 1 0Ohm 2 100M_BCLK#_R C8 CLKOUT_CPUBCLK_N
R277 1 0Ohm 2 24M_CLK_R D7 CLKOUT_CPUNSSC_P
R286 1 0Ohm 2 24M_CLK#_R C6 CLKOUT_CPUNSSC_N
R279 1 0Ohm 2 100M_PCI_BCLK_R A6 CLKOUT_CPUPCIBCLK_P
R281 1 0Ohm 2 100M_PCI_BCLK#_R B6 CLKOUT_CPUPCIBCLK_N
R282 1 0Ohm 2 100M_PCH_XDP_R Y4 CLKOUT_ITPXDP_P
R290 1 0Ohm 2 100M_PCH_XDP#_R Y3 CLKOUT_ITPXDP_N
+1.05V_PCH_XTAL
R292 2.7KOHM /X
R293 1 1% 2 60.4 OHM XCK_BIASREF T3 XCLK_BIASREF
R295 1 1% 2 100 Ohm PCIE_RCOMP A13 PCIE_RCOMPP
PCIE_RCOMP# B12 PCIE_RCOMPN
/X 1 AL35 TP_1
/X 1 AN35 TP_2
/X 1 AH15 RSVD_19
/X 1 R32 RSVD_20
/X 1 N32 RSVD_21
/X 1 U35 RSVD_22
/X 1 U37 RSVD_23
/X 1 R15 RSVD_24
/X 1 R13 RSVD_25
/X 1 U13 RSVD_26
/X 1 Y35 RSVD_27
/X 1 Y36 RSVD_28
/X 1 Y15 RSVD_29
/X 1 Y14 RSVD_30
CLKOUT_PCIE_P0 AJ7 100M_WIFIR R284 1 0Ohm 2 100M_WIFI 41
CLKOUT_PCIE_N0 AJ6 100M_WIFIR# R285 1 0Ohm 2 100M_WIFI# 41
CLKOUT_PCIE_P1 AH10 100M_PE1_OCPR1 R278 1 0Ohm 2 100M_PE1_OCP1 29
CLKOUT_PCIE_N1 AH9 100M_PE1_OCPR#1 R287 1 0Ohm 2 100M_PE1_OCP#1 29
CLKOUT_PCIE_P2 AE15 100M_PE2_OCPR1 R280 1 0Ohm 2 100M_PE2_OCP1 30
CLKOUT_PCIE_N2 AE14 100M_PE2_OCPR#1 R288 1 0Ohm 2 100M_PE2_OCP#1 30
CLKOUT_PCIE_P3 AE7 100M_PCIEXR8 R289 1 0Ohm 2 100M_PCIEX8 31
CLKOUT_PCIE_N3 AE6 100M_PCIEXR8# R291 1 0Ohm 2 100M_PCIEX8# 31
CLKOUT_PCIE_P4 AC3 100M_LAN0_R R1491 1 0Ohm 2 100M_LAN0 66
CLKOUT_PCIE_N4 AC2 100M_LAN#0_R R1490 1 0Ohm 2 100M_LAN#0 66
CLKOUT_PCIE_P5 AB3 100M_LAN1_R R1493 1 0Ohm 2 100M_LAN1 69
CLKOUT_PCIE_N5 AB2 100M_LAN#1_R R1492 1 0Ohm 2 100M_LAN#1 69
CLKOUT_PCIE_P6 W3 100M_LAN2_R R1495 1 0Ohm 2 100M_LAN2 74
CLKOUT_PCIE_N6 W4 100M_LAN#2_R R1494 1 0Ohm 2 100M_LAN#2 74
CLKOUT_PCIE_P7 W6 100M_LAN3_R R1497 1 0Ohm 2 100M_LAN3 77
CLKOUT_PCIE_N7 W7 100M_LAN#3_R R1496 1 0Ohm 2 100M_LAN#3 77
CLKOUT_PCIE_P8 AC15 100M_BMCR R294 1 0Ohm 2 100M_BMC 50
CLKOUT_PCIE_N8 AC14 100M_BMCR# R296 1 0Ohm 2 100M_BMC# 50
CLKOUT_PCIE_P9 U3 100M_PE1_OCPR2 R1861 1 0Ohm 2 100M_PE1_OCP2 29
CLKOUT_PCIE_N9 U2 100M_PE1_OCPR#2 R1860 1 0Ohm 2 100M_PE1_OCP#2 29
CLKOUT_PCIE_P10 AC11 100M_PE2_OCPR2 R1863 1 0Ohm 2 100M_PE2_OCP2 30
CLKOUT_PCIE_N10 AC9 100M_PE2_OCPR#2 R1862 1 0Ohm 2 100M_PE2_OCP#2 30
CLKOUT_PCIE_P11 AE11
CLKOUT_PCIE_N11 AE9
CLKOUT_PCIE_P12 AC6
CLKOUT_PCIE_N12 AC7
CLKOUT_PCIE_P13 Y2
CLKOUT_PCIE_N13 AA1
CLKOUT_PCIE_P14 T1
CLKOUT_PCIE_N14 T2
CLKOUT_PCIE_P15 V3
CLKOUT_PCIE_N15 V2
CNV_WR_CLKP BE3 CNV_WR_CLKR R297 1 0Ohm 2 CNV_WR_CLK 41
CNV_WR_CLKN BD4 CNV_WR_CLKR# R299 1 0Ohm 2 CNV_WR_CLK# 41
CNV_WT_CLKP BB6 CNV_WT_CLKR R301 1 0Ohm 2 CNV_WT_CLK 41
CNV_WT_CLKN BC5 CNV_WT_CLKR# R302 1 0Ohm 2 CNV_WT_CLK# 41
CLKREQ_R R283 1 /X 2 1KOhm
PCH_RTCX1
PCH_RTCX2
R298 1 2 10MOHM
R300 1 0Ohm 2
X1 32.768KHZ
C243 12PF/50V
C244 12PF/50V
RTCRST# BE47 RTCRST#
PCH_RTCX1 BA48 RTCX2
PCH_RTCX2 BA49 RTCX1
41 CLKREQ R304 1 0Ohm 2 CLKREQ_R R6 CLKIN_XTAL
17 P1_TRIGOUT P1_TRIGOUT AK2 TRIGGER_IN
17 P1_TRIGIN R306 1 33.2Ohm2 1% P1_TRIGIN_R AK3 TRIGGER_OUT
XTAL_IN U10 PCH_24M_IN
XTAL_OUT U9 PCH_24M_OUT
USB2_COMP F4 USB2_COMP R303 1 1% 2 113Ohm
RSVD_17 BC1 1 /X
RSVD_18 AH14 1 /X
CNV_WT_RCOMP BA1 CNV_WT_COMP R305 1 1% 2 150 Ohm
SD_1P8_RCOMP BE5
SD_3P3_RCOMP BE4
GPPJ_RCOMP_1P8_1 BD1
GPPJ_RCOMP_1P8_2 BE1
GPPJ_RCOMP_1P8_3 BE2
R308 200 Ohm 1%
PCH_24M_IN
PCH_24M_OUT R307 1 2 1MOHM
1 3 R309 1 0Ohm 2
X2 24MHZ
C245 10PF/50V
C246 10PF/50V
CLEAR COMS
+3.3V_BAT
R310 24.9KOHM 1%
CRTC1
HEADER_1X3P
R312 1 49.9Ohm2 1% RTCRST#
R313 1KOhm
C247 1uF/10V X6S/+/-10%
R314 1MOHM /X
CRTC1:1
MINI_JUMPER
1-2: RTC RESET(DEFAULT)
2-3: CLR RTC REGISTERS
+3.3V_BAT
R311 24.9KOHM 1%
34 RST_SRTCRST# RST_SRTCRST#
C248 1uF/10V X6S/+/-10%

<Variant Name>

PEGATRON Title : 035 PCH CLOCK

PEGATRON PROPRIETARY AND CONFIDENTIAL

PEGATRON CORPORATION Engineer: *Tom_Liao*

Size	Project Name	Rev
A3	CLCL-N	1.00

Date: Tuesday, November 27, 2018 Sheet 35 of 110

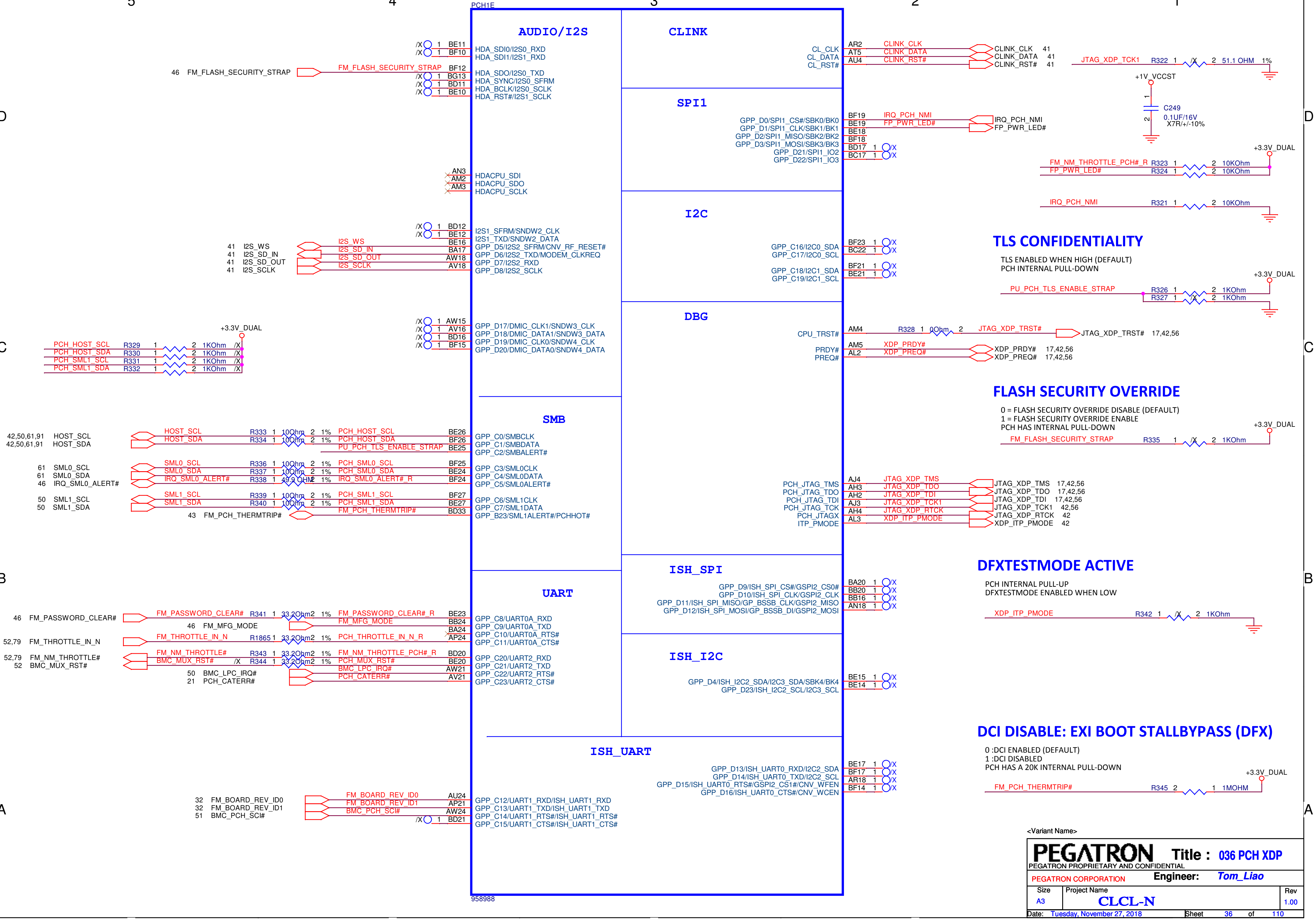
PCH1E
AUDIO/I2S
CLINK
SPI1
I2C
DBG
SMB
UART
ISH_SPI
ISH_I2C
ISH_UART
958988
BE11 HDA_SDI0/I2S0_RXD
BF10 HDA_SDI1/I2S1_RXD
46 FM_FLASH_SECURITY_STRAP
FM_FLASH_SECURITY_STRAP BF12 HDA_SDO/I2S0_TXD
BG13 HDA_SYNC/I2S0_SFRM
BD11 HDA_BCLK/I2S0_SCLK
BE10 HDA_RST#/I2S1_SCLK
AN3 HDACPU_SDI
AM2 HDACPU_SDO
AM3 HDACPU_SCLK
BD12 I2S1_SFRM/SNDW2_CLK
BE12 I2S1_TXD/SNDW2_DATA
BE16 GPP_D5/I2S2_SFRM/CNV_RF_RESET#
BA17 GPP_D6/I2S2_TXD/MODEM_CLKREQ
AW18 GPP_D7/I2S2_RXD
AV18 GPP_D8/I2S2_SCLK
41 I2S_WS
41 I2S_SD_IN
41 I2S_SD_OUT
41 I2S_SCLK
I2S_WS
I2S_SD_IN
I2S_SD_OUT
I2S_SCLK
AW15 GPP_D17/DMIC_CLK1/SNDW3_CLK
AV16 GPP_D18/DMIC_DATA1/SNDW3_DATA
BD16 GPP_D19/DMIC_CLK0/SNDW4_CLK
BF15 GPP_D20/DMIC_DATA0/SNDW4_DATA
+3.3V_DUAL
PCH_HOST_SCL R329 1 2 1KOhm /X
PCH_HOST_SDA R330 1 2 1KOhm /X
PCH_SML1_SCL R331 1 2 1KOhm /X
PCH_SML1_SDA R332 1 2 1KOhm /X
42,50,61,91 HOST_SCL
42,50,61,91 HOST_SDA
HOST_SCL R333 1 10Ohm 2 1% PCH_HOST_SCL BE26 GPP_C0/SMBCLK
HOST_SDA R334 1 10Ohm 2 1% PCH_HOST_SDA BF26 GPP_C1/SMBDATA
PU_PCH_TLS_ENABLE_STRAP BE25 GPP_C2/SMBALERT#
61 SML0_SCL
61 SML0_SDA
46 IRQ_SML0_ALERT#
SML0_SCL R336 1 10Ohm 2 1% PCH_SML0_SCL BF25 GPP_C3/SML0CLK
SML0_SDA R337 1 10Ohm 2 1% PCH_SML0_SDA BE24 GPP_C4/SML0DATA
IRQ_SML0_ALERT# R338 1 49.9 OHM 2 1% IRQ_SML0_ALERT#_R BF24 GPP_C5/SML0ALERT#
50 SML1_SCL
50 SML1_SDA
SML1_SCL R339 1 10Ohm 2 1% PCH_SML1_SCL BF27 GPP_C6/SML1CLK
SML1_SDA R340 1 10Ohm 2 1% PCH_SML1_SDA BE27 GPP_C7/SML1DATA
43 FM_PCH_THERMTRIP# FM_PCH_THERMTRIP# BD33 GPP_B23/SML1ALERT#/PCHHOT#
46 FM_PASSWORD_CLEAR#
FM_PASSWORD_CLEAR# R341 1 33.2Ohm 2 1% FM_PASSWORD_CLEAR#_R BE23 GPP_C8/UART0A_RXD
46 FM_MFG_MODE FM_MFG_MODE BB24 GPP_C9/UART0A_TXD
BA24 GPP_C10/UART0A_RTS#
52,79 FM_THROTTLE_IN_N
FM_THROTTLE_IN_N R1865 1 33.2Ohm 2 1% PCH_THROTTLE_IN_N_R AP24 GPP_C11/UART0A_CTS#
52,79 FM_NM_THROTTLE#
52 BMC_MUX_RST#
FM_NM_THROTTLE# R343 1 33.2Ohm 2 1% FM_NM_THROTTLE_PCH#_R BD20 GPP_C20/UART2_RXD
BMC_MUX_RST# /X R344 1 33.2Ohm 2 1% PCH_MUX_RST# BE20 GPP_C21/UART2_TXD
50 BMC_LPC_IRQ# BMC_LPC_IRQ# AW21 GPP_C22/UART2_RTS#
21 PCH_CATERR# PCH_CATERR# AV21 GPP_C23/UART2_CTS#
32 FM_BOARD_REV_ID0 FM_BOARD_REV_ID0 AU24 GPP_C12/UART1_RXD/ISH_UART1_RXD
32 FM_BOARD_REV_ID1 FM_BOARD_REV_ID1 AP21 GPP_C13/UART1_TXD/ISH_UART1_TXD
51 BMC_PCH_SCI# BMC_PCH_SCI# AW24 GPP_C14/UART1_RTS#/ISH_UART1_RTS#
BD21 GPP_C15/UART1_CTS#/ISH_UART1_CTS#
CL_CLK AR2 CLINK_CLK CLINK_CLK 41
CL_DATA AT5 CLINK_DATA CLINK_DATA 41
CL_RST# AU4 CLINK_RST# CLINK_RST# 41
GPP_D0/SPI1_CS#/SBK0/BK0 BF19 IRQ_PCH_NMI IRQ_PCH_NMI
GPP_D1/SPI1_CLK/SBK1/BK1 BE19 FP_PWR_LED# FP_PWR_LED#
GPP_D2/SPI1_MISO/SBK2/BK2 BE18
GPP_D3/SPI1_MOSI/SBK3/BK3 BF18
GPP_D21/SPI1_IO2 BD17
GPP_D22/SPI1_IO3 BC17
GPP_C16/I2C0_SDA BF23
GPP_C17/I2C0_SCL BC22
GPP_C18/I2C1_SDA BF21
GPP_C19/I2C1_SCL BE21
CPU_TRST# AM4 R328 1 0Ohm 2 JTAG_XDP_TRST# JTAG_XDP_TRST# 17,42,56
PRDY# AM5 XDP_PRDY# XDP_PRDY# 17,42,56
PREQ# AL2 XDP_PREQ# XDP_PREQ# 17,42,56
PCH_JTAG_TMS AJ4 JTAG_XDP_TMS JTAG_XDP_TMS 17,42,56
PCH_JTAG_TDO AH3 JTAG_XDP_TDO JTAG_XDP_TDO 17,42,56
PCH_JTAG_TDI AH2 JTAG_XDP_TDI JTAG_XDP_TDI 17,42,56
PCH_JTAG_TCK AJ3 JTAG_XDP_TCK1 JTAG_XDP_TCK1 42,56
PCH_JTAGX AH4 JTAG_XDP_RTCK JTAG_XDP_RTCK 42
ITP_PMODE AL3 XDP_ITP_PMODE XDP_ITP_PMODE 42
GPP_D9/ISH_SPI_CS#/GSPI2_CS0# BA20
GPP_D10/ISH_SPI_CLK/GSPI2_CLK BB20
GPP_D11/ISH_SPI_MISO/GP_BSSB_CLK/GSPI2_MISO BB16
GPP_D12/ISH_SPI_MOSI/GP_BSSB_DI/GSPI2_MOSI AN18
GPP_D4/ISH_I2C2_SDA/I2C3_SDA/SBK4/BK4 BE15
GPP_D23/ISH_I2C2_SCL/I2C3_SCL BE14
GPP_D13/ISH_UART0_RXD/I2C2_SDA BE17
GPP_D14/ISH_UART0_TXD/I2C2_SCL BF17
GPP_D15/ISH_UART0_RTS#/GSPI2_CS1#/CNV_WFEN AR18
GPP_D16/ISH_UART0_CTS#/CNV_WCEN BF14
JTAG_XDP_TCK1 R322 1 /X 2 51.1 OHM 1%
+1V_VCCST
C249 0.1UF/16V X7R/+/-10%
+3.3V_DUAL
FM_NM_THROTTLE_PCH#_R R323 1 2 10KOhm
FP_PWR_LED# R324 1 2 10KOhm
IRQ_PCH_NMI R321 1 2 10KOhm
+3.3V_DUAL
PU_PCH_TLS_ENABLE_STRAP R326 1 2 1KOhm
R327 1 /X 2 1KOhm
+3.3V_DUAL
FM_FLASH_SECURITY_STRAP R335 1 /X 2 1KOhm
XDP_ITP_PMODE R342 1 /X 2 1KOhm
+3.3V_DUAL
FM_PCH_THERMTRIP# R345 2 1 1MOHM
/X
5 4 3 2 1
D C B A

TLS CONFIDENTIALITY

TLS ENABLED WHEN HIGH (DEFAULT)
PCH INTERNAL PULL-DOWN

FLASH SECURITY OVERRIDE

0 = FLASH SECURITY OVERRIDE DISABLE (DEFAULT)
1 = FLASH SECURITY OVERRIDE ENABLE
PCH HAS INTERNAL PULL-DOWN

DFXTESTMODE ACTIVE

PCH INTERNAL PULL-UP
DFXTESTMODE ENABLED WHEN LOW

DCI DISABLE: EXI BOOT STALLBYPASS (DFX)

0 :DCI ENABLED (DEFAULT)
1 :DCI DISABLED
PCH HAS A 20K INTERNAL PULL-DOWN

<Variant Name>

PEGATRON
PEGATRON PROPRIETARY AND CONFIDENTIAL
PEGATRON CORPORATION

Title : 036 PCH XDP
Engineer: Tom_Liao

Size	Project Name	Rev
A3	CLCL-N	1.00

Date: Tuesday, November 27, 2018 Sheet 36 of 110

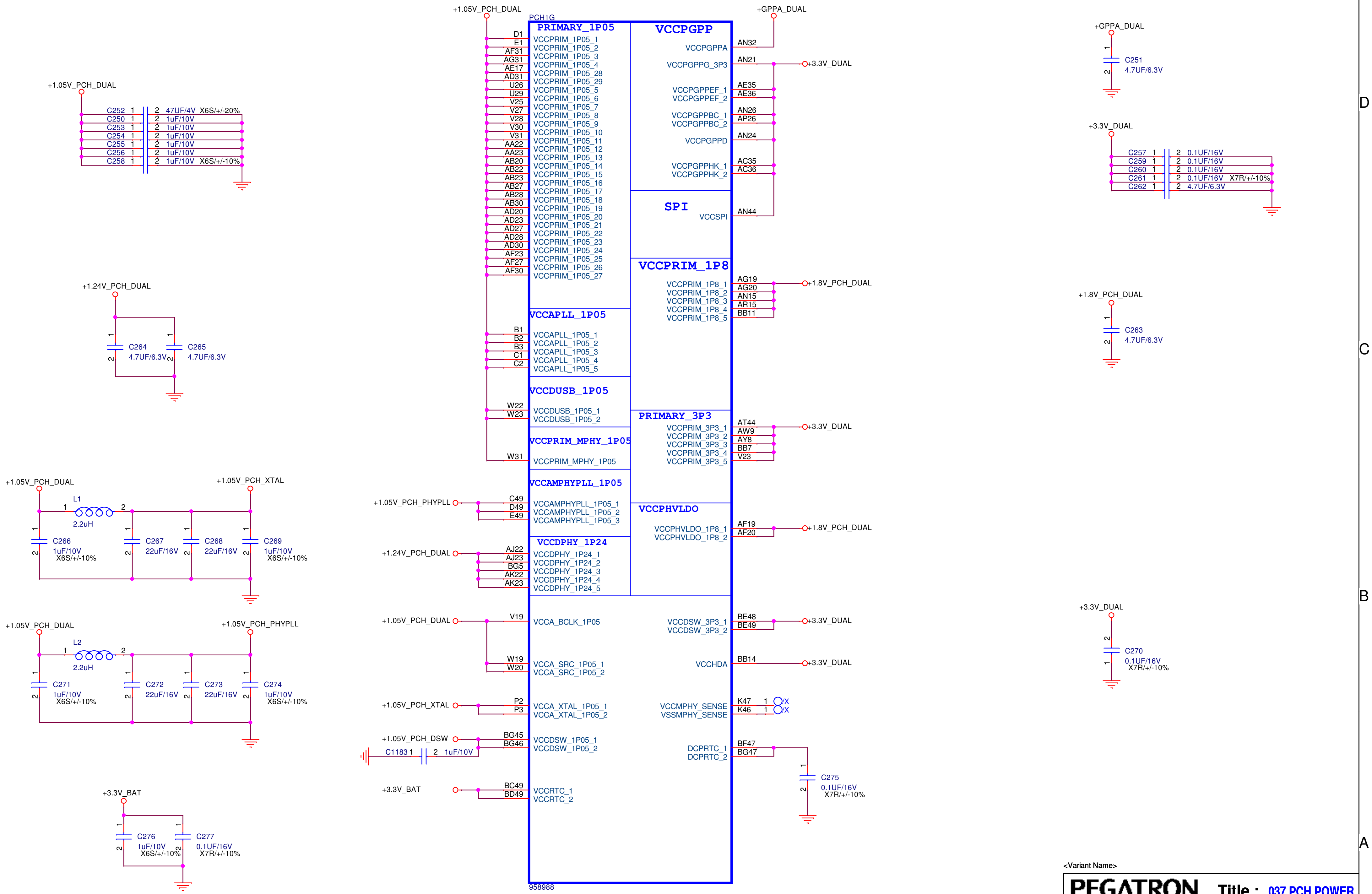
PCH1G
958988
PRIMARY_1P05
VCCPRIM_1P05_1 … VCCPRIM_1P05_27, VCCPRIM_1P05_28, VCCPRIM_1P05_29
D1 E1 AF31 AG31 AE17 AD31 U26 U29 V25 V27 V28 V30 V31 AA22 AA23 AB20 AB22 AB23 AB27 AB28 AB30 AD20 AD23 AD27 AD28 AD30 AF23 AF27 AF30
VCCAPLL_1P05
VCCAPLL_1P05_1 … VCCAPLL_1P05_5
B1 B2 B3 C1 C2
VCCDUSB_1P05
VCCDUSB_1P05_1 VCCDUSB_1P05_2
W22 W23
VCCPRIM_MPHY_1P05
W31
VCCAMPHYPLL_1P05
VCCAMPHYPLL_1P05_1 VCCAMPHYPLL_1P05_2 VCCAMPHYPLL_1P05_3
C49 D49 E49
VCCDPHY_1P24
VCCDPHY_1P24_1 … VCCDPHY_1P24_5
AJ22 AJ23 BG5 AK22 AK23
V19 VCCA_BCLK_1P05
W19 W20 VCCA_SRC_1P05_1 VCCA_SRC_1P05_2
P2 P3 VCCA_XTAL_1P05_1 VCCA_XTAL_1P05_2
BG45 BG46 VCCDSW_1P05_1 VCCDSW_1P05_2
BC49 BD49 VCCRTC_1 VCCRTC_2
VCCPGPP
AN32 VCCPGPPA
AN21 VCCPGPPG_3P3
AE35 AE36 VCCPGPPEF_1 VCCPGPPEF_2
AN26 AP26 VCCPGPPBC_1 VCCPGPPBC_2
AN24 VCCPGPPD
AC35 AC36 VCCPGPPHK_1 VCCPGPPHK_2
SPI
AN44 VCCSPI
VCCPRIM_1P8
AG19 AG20 AN15 AR15 BB11 VCCPRIM_1P8_1 … VCCPRIM_1P8_5
PRIMARY_3P3
AT44 AW9 AY8 BB7 V23 VCCPRIM_3P3_1 … VCCPRIM_3P3_5
VCCPHVLDO
AF19 AF20 VCCPHVLDO_1P8_1 VCCPHVLDO_1P8_2
BE48 BE49 VCCDSW_3P3_1 VCCDSW_3P3_2
BB14 VCCHDA
K47 K46 VCCMPHY_SENSE VSSMPHY_SENSE X
BF47 BG47 DCPRTC_1 DCPRTC_2
+1.05V_PCH_DUAL
+1.05V_PCH_PHYPLL
+1.24V_PCH_DUAL
+1.05V_PCH_XTAL
+1.05V_PCH_DSW
+3.3V_BAT
+GPPA_DUAL
+3.3V_DUAL
+1.8V_PCH_DUAL
C1183 1 2 1uF/10V
C275 0.1UF/16V X7R/+/-10%
C252 47UF/4V X6S/+/-20%
C250 C253 C254 C255 C256 1uF/10V
C258 1uF/10V X6S/+/-10%
C264 4.7UF/6.3V
C265 4.7UF/6.3V
L1 2.2uH
L2 2.2uH
C266 1uF/10V X6S/+/-10%
C267 22uF/16V
C268 22uF/16V
C269 1uF/10V X6S/+/-10%
C271 1uF/10V X6S/+/-10%
C272 22uF/16V
C273 22uF/16V
C274 1uF/10V X6S/+/-10%
C276 1uF/10V X6S/+/-10%
C277 0.1UF/16V X7R/+/-10%
C251 4.7UF/6.3V
C257 C259 C260 0.1UF/16V
C261 0.1UF/16V X7R/+/-10%
C262 4.7UF/6.3V
C263 4.7UF/6.3V
C270 0.1UF/16V X7R/+/-10%
5 4 3 2 1
D C B A

<Variant Name>

PEGATRON PEGATRON PROPRIETARY AND CONFIDENTIAL

Title : 037 PCH POWER

PEGATRON CORPORATION

Engineer: *Tom_Liao*

Size	Project Name	Rev
A3	CLCL-N	1.00

Date: Tuesday, November 27, 2018 Sheet 37 of 110

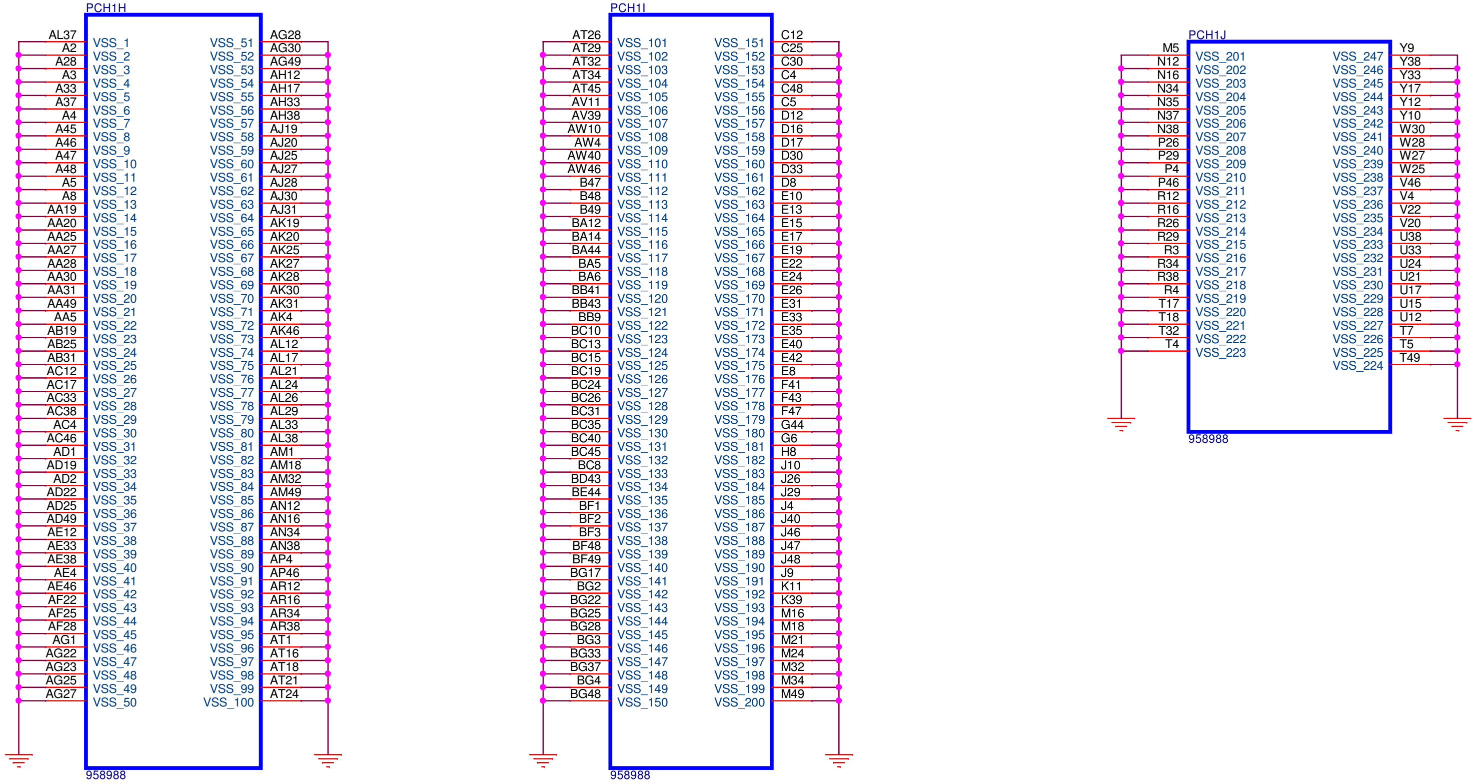
PCH1H
AL37 VSS_1
A2 VSS_2
A28 VSS_3
A3 VSS_4
A33 VSS_5
A37 VSS_6
A4 VSS_7
A45 VSS_8
A46 VSS_9
A47 VSS_10
A48 VSS_11
A5 VSS_12
A8 VSS_13
AA19 VSS_14
AA20 VSS_15
AA25 VSS_16
AA27 VSS_17
AA28 VSS_18
AA30 VSS_19
AA31 VSS_20
AA49 VSS_21
AA5 VSS_22
AB19 VSS_23
AB25 VSS_24
AB31 VSS_25
AC12 VSS_26
AC17 VSS_27
AC33 VSS_28
AC38 VSS_29
AC4 VSS_30
AC46 VSS_31
AD1 VSS_32
AD19 VSS_33
AD2 VSS_34
AD22 VSS_35
AD25 VSS_36
AD49 VSS_37
AE12 VSS_38
AE33 VSS_39
AE38 VSS_40
AE4 VSS_41
AE46 VSS_42
AF22 VSS_43
AF25 VSS_44
AF28 VSS_45
AG1 VSS_46
AG22 VSS_47
AG23 VSS_48
AG25 VSS_49
AG27 VSS_50
VSS_51 AG28
VSS_52 AG30
VSS_53 AG49
VSS_54 AH12
VSS_55 AH17
VSS_56 AH33
VSS_57 AH38
VSS_58 AJ19
VSS_59 AJ20
VSS_60 AJ25
VSS_61 AJ27
VSS_62 AJ28
VSS_63 AJ30
VSS_64 AJ31
VSS_65 AK19
VSS_66 AK20
VSS_67 AK25
VSS_68 AK27
VSS_69 AK28
VSS_70 AK30
VSS_71 AK31
VSS_72 AK4
VSS_73 AK46
VSS_74 AL12
VSS_75 AL17
VSS_76 AL21
VSS_77 AL24
VSS_78 AL26
VSS_79 AL29
VSS_80 AL33
VSS_81 AL38
VSS_82 AM1
VSS_83 AM18
VSS_84 AM32
VSS_85 AM49
VSS_86 AN12
VSS_87 AN16
VSS_88 AN34
VSS_89 AN38
VSS_90 AP4
VSS_91 AP46
VSS_92 AR12
VSS_93 AR16
VSS_94 AR34
VSS_95 AR38
VSS_96 AT1
VSS_97 AT16
VSS_98 AT18
VSS_99 AT21
VSS_100 AT24
958988
PCH1I
AT26 VSS_101
AT29 VSS_102
AT32 VSS_103
AT34 VSS_104
AT45 VSS_105
AV11 VSS_106
AV39 VSS_107
AW10 VSS_108
AW4 VSS_109
AW40 VSS_110
AW46 VSS_111
B47 VSS_112
B48 VSS_113
B49 VSS_114
BA12 VSS_115
BA14 VSS_116
BA44 VSS_117
BA5 VSS_118
BA6 VSS_119
BB41 VSS_120
BB43 VSS_121
BB9 VSS_122
BC10 VSS_123
BC13 VSS_124
BC15 VSS_125
BC19 VSS_126
BC24 VSS_127
BC26 VSS_128
BC31 VSS_129
BC35 VSS_130
BC40 VSS_131
BC45 VSS_132
BC8 VSS_133
BD43 VSS_134
BE44 VSS_135
BF1 VSS_136
BF2 VSS_137
BF3 VSS_138
BF48 VSS_139
BF49 VSS_140
BG17 VSS_141
BG2 VSS_142
BG22 VSS_143
BG25 VSS_144
BG28 VSS_145
BG3 VSS_146
BG33 VSS_147
BG37 VSS_148
BG4 VSS_149
BG48 VSS_150
VSS_151 C12
VSS_152 C25
VSS_153 C30
VSS_154 C4
VSS_155 C48
VSS_156 C5
VSS_157 D12
VSS_158 D16
VSS_159 D17
VSS_160 D30
VSS_161 D33
VSS_162 D8
VSS_163 E10
VSS_164 E13
VSS_165 E15
VSS_166 E17
VSS_167 E19
VSS_168 E22
VSS_169 E24
VSS_170 E26
VSS_171 E31
VSS_172 E33
VSS_173 E35
VSS_174 E40
VSS_175 E42
VSS_176 E8
VSS_177 F41
VSS_178 F43
VSS_179 F47
VSS_180 G44
VSS_181 G6
VSS_182 H8
VSS_183 J10
VSS_184 J26
VSS_185 J29
VSS_186 J4
VSS_187 J40
VSS_188 J46
VSS_189 J47
VSS_190 J48
VSS_191 J9
VSS_192 K11
VSS_193 K39
VSS_194 M16
VSS_195 M18
VSS_196 M21
VSS_197 M24
VSS_198 M32
VSS_199 M34
VSS_200 M49
958988
PCH1J
M5 VSS_201
N12 VSS_202
N16 VSS_203
N34 VSS_204
N35 VSS_205
N37 VSS_206
N38 VSS_207
P26 VSS_208
P29 VSS_209
P4 VSS_210
P46 VSS_211
R12 VSS_212
R16 VSS_213
R26 VSS_214
R29 VSS_215
R3 VSS_216
R34 VSS_217
R38 VSS_218
R4 VSS_219
T17 VSS_220
T18 VSS_221
T32 VSS_222
T4 VSS_223
VSS_247 Y9
VSS_246 Y38
VSS_245 Y33
VSS_244 Y17
VSS_243 Y12
VSS_242 Y10
VSS_241 W30
VSS_240 W28
VSS_239 W27
VSS_238 W25
VSS_237 V46
VSS_236 V4
VSS_235 V22
VSS_234 V20
VSS_233 U38
VSS_232 U33
VSS_231 U24
VSS_230 U21
VSS_229 U17
VSS_228 U15
VSS_227 U12
VSS_226 T7
VSS_225 T5
VSS_224 T49
958988

<Variant Name>

PEGATRON **Title :** 038 PCH GND
PEGATRON PROPRIETARY AND CONFIDENTIAL
PEGATRON CORPORATION **Engineer:** *Tom_Liao*

Size	Project Name	Rev
A3	CLCL-N	1.00

Date: Tuesday, November 27, 2018 Sheet 38 of 110

BIOS FLASH

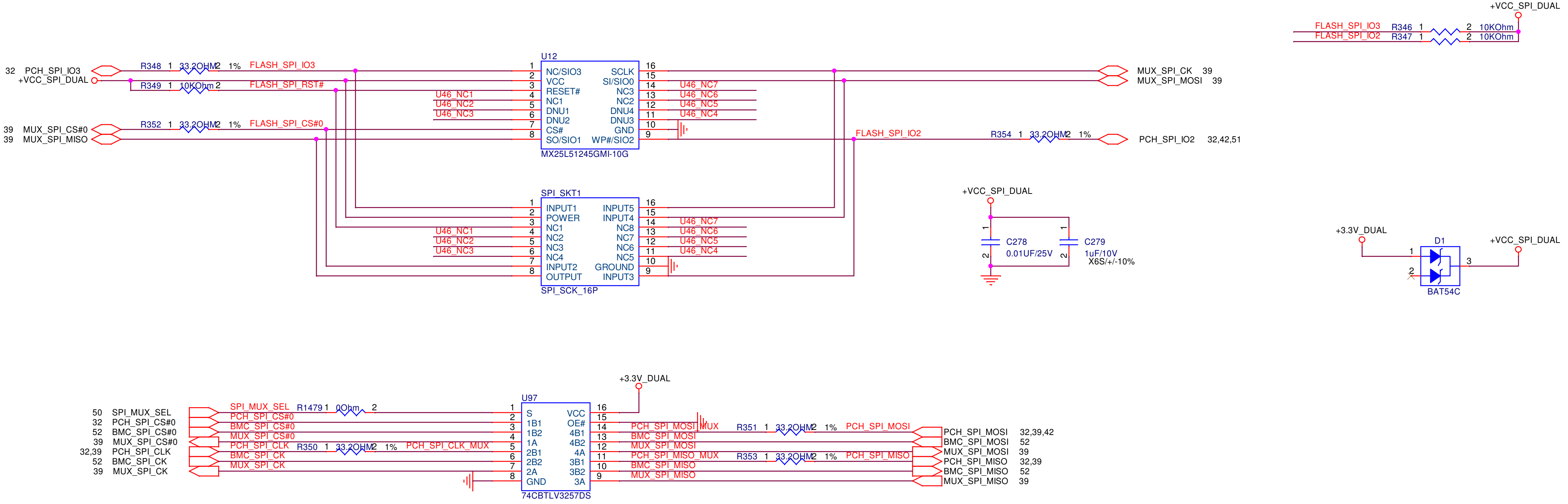
+VCC_SPI_DUAL
FLASH_SPI_IO3 R346 1 2 10KOhm
FLASH_SPI_IO2 R347 1 2 10KOhm
32 PCH_SPI_IO3
+VCC_SPI_DUAL
R348 1 33.2OHM 2 1% FLASH_SPI_IO3
R349 1 10KOhm 2 FLASH_SPI_RST#
39 MUX_SPI_CS#0
39 MUX_SPI_MISO
R352 1 33.2OHM 2 1% FLASH_SPI_CS#0
U46_NC1
U46_NC2
U46_NC3
U12
NC/SIO3
VCC
RESET#
NC1
DNU1
DNU2
CS#
SO/SIO1
SCLK
SI/SIO0
NC3
NC2
DNU4
DNU3
GND
WP#/SIO2
MX25L51245GMI-10G
U46_NC7
U46_NC6
U46_NC5
U46_NC4
MUX_SPI_CK 39
MUX_SPI_MOSI 39
FLASH_SPI_IO2
R354 1 33.2OHM 2 1%
PCH_SPI_IO2 32,42,51
SPI_SKT1
INPUT1
POWER
NC1
NC2
NC3
NC4
INPUT2
OUTPUT
INPUT5
INPUT4
NC8
NC7
NC6
NC5
GROUND
INPUT3
SPI_SCK_16P
+VCC_SPI_DUAL
C278 0.01UF/25V
C279 1uF/10V X6S/+/-10%
+3.3V_DUAL
D1
BAT54C
+VCC_SPI_DUAL
+3.3V_DUAL
50 SPI_MUX_SEL
32 PCH_SPI_CS#0
52 BMC_SPI_CS#0
39 MUX_SPI_CS#0
32,39 PCH_SPI_CLK
52 BMC_SPI_CK
39 MUX_SPI_CK
SPI_MUX_SEL R1479 1 0Ohm 2
PCH_SPI_CS#0
BMC_SPI_CS#0
MUX_SPI_CS#0
PCH_SPI_CLK R350 1 33.2OHM 2 1% PCH_SPI_CLK_MUX
BMC_SPI_CK
MUX_SPI_CK
U97
S
1B1
1B2
1A
2B1
2B2
2A
GND
VCC
OE#
4B1
4B2
4A
3B1
3B2
3A
74CBTLV3257DS
PCH_SPI_MOSI_MUX R351 1 33.2OHM 2 1% PCH_SPI_MOSI
BMC_SPI_MOSI
MUX_SPI_MOSI
PCH_SPI_MISO_MUX R353 1 33.2OHM 2 1% PCH_SPI_MISO
BMC_SPI_MISO
MUX_SPI_MISO
PCH_SPI_MOSI 32,39,42
BMC_SPI_MOSI 52
MUX_SPI_MOSI 39
PCH_SPI_MISO 32,39
BMC_SPI_MISO 52
MUX_SPI_MISO 39

TPM

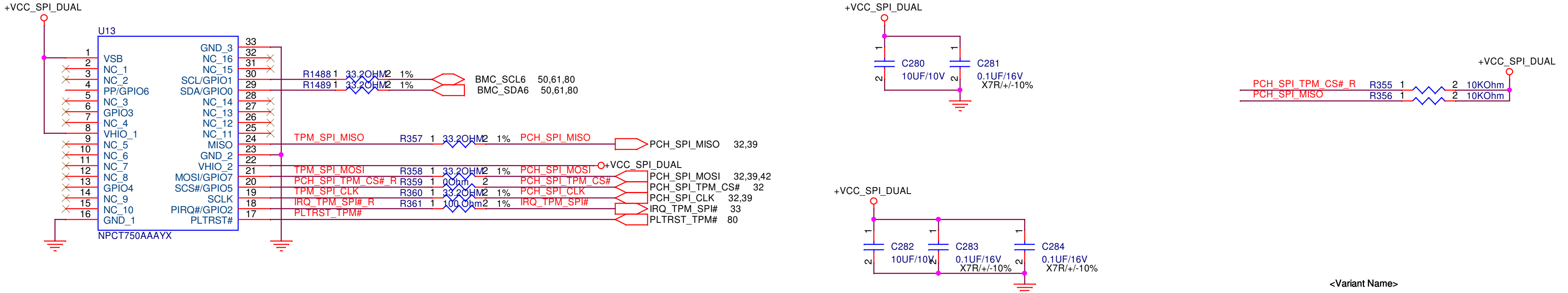
+VCC_SPI_DUAL
U13
VSB
NC_1
NC_2
PP/GPIO6
NC_3
GPIO3
NC_4
VHIO_1
NC_5
NC_6
NC_7
NC_8
GPIO4
NC_9
NC_10
GND_1
GND_3
NC_16
NC_15
SCL/GPIO1
SDA/GPIO0
NC_14
NC_13
NC_12
NC_11
MISO
GND_2
VHIO_2
MOSI/GPIO7
SCS#/GPIO5
SCLK
PIRQ#/GPIO2
PLTRST#
NPCT750AAAYX
R1488 1 33.2OHM 2 1%
R1489 1 33.2OHM 2 1%
BMC_SCL6 50,61,80
BMC_SDA6 50,61,80
TPM_SPI_MISO R357 1 33.2OHM 2 1% PCH_SPI_MISO
PCH_SPI_MISO 32,39
+VCC_SPI_DUAL
TPM_SPI_MOSI R358 1 33.2OHM 2 1% PCH_SPI_MOSI
PCH_SPI_TPM_CS#_R R359 1 0Ohm 2 PCH_SPI_TPM_CS#
TPM_SPI_CLK R360 1 33.2OHM 2 1% PCH_SPI_CLK
IRQ_TPM_SPI#_R R361 1 100 Ohm 2 1% IRQ_TPM_SPI#
PLTRST_TPM#
PCH_SPI_MOSI 32,39,42
PCH_SPI_TPM_CS# 32
PCH_SPI_CLK 32,39
IRQ_TPM_SPI# 33
PLTRST_TPM# 80
+VCC_SPI_DUAL
C280 10UF/10V
C281 0.1UF/16V X7R/+/-10%
+VCC_SPI_DUAL
C282 10UF/10V
C283 0.1UF/16V X7R/+/-10%
C284 0.1UF/16V X7R/+/-10%
+VCC_SPI_DUAL
PCH_SPI_TPM_CS#_R R355 1 2 10KOhm
PCH_SPI_MISO R356 1 2 10KOhm

<Variant Name>

PEGATRON **Title : 039 FLASH SPI/TPM**

PEGATRON PROPRIETARY AND CONFIDENTIAL

PEGATRON CORPORATION **Engineer:** *Tom_Liao*

Size	Project Name	Rev
A3	CLCL-N	1.00

Date: Tuesday, November 27, 2018 Sheet 39 of 110

SATA HDD CONNECTOR

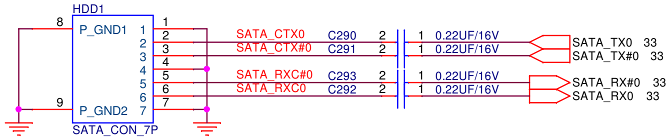
HDD1
P_GND1
P_GND2
8
9
1
2
3
4
5
6
7
SATA_CON_7P
SATA_CTX0
SATA_CTX#0
SATA_RXC#0
SATA_RXC0
C290
C291
C293
C292
0.22UF/16V
0.22UF/16V
0.22UF/16V
0.22UF/16V
SATA_TX0 33
SATA_TX#0 33
SATA_RX#0 33
SATA_RX0 33

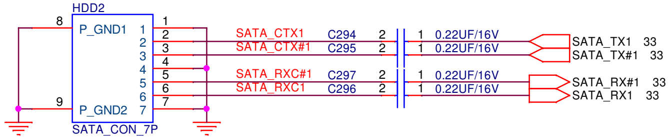
HDD2
P_GND1
P_GND2
8
9
1
2
3
4
5
6
7
SATA_CON_7P
SATA_CTX1
SATA_CTX#1
SATA_RXC#1
SATA_RXC1
C294
C295
C297
C296
0.22UF/16V
0.22UF/16V
0.22UF/16V
0.22UF/16V
SATA_TX1 33
SATA_TX#1 33
SATA_RX#1 33
SATA_RX1 33

<Variant Name>

PEGATRON **Title :** **040 SATA 2.5" HDD**
PEGATRON PROPRIETARY AND CONFIDENTIAL
PEGATRON CORPORATION **Engineer:** ***Tom_Liao***

Size	Project Name	Rev
A3	**CLCL-N**	1.00

Date: Tuesday, November 27, 2018 Sheet 40 of 110

M.2 WIRELESS

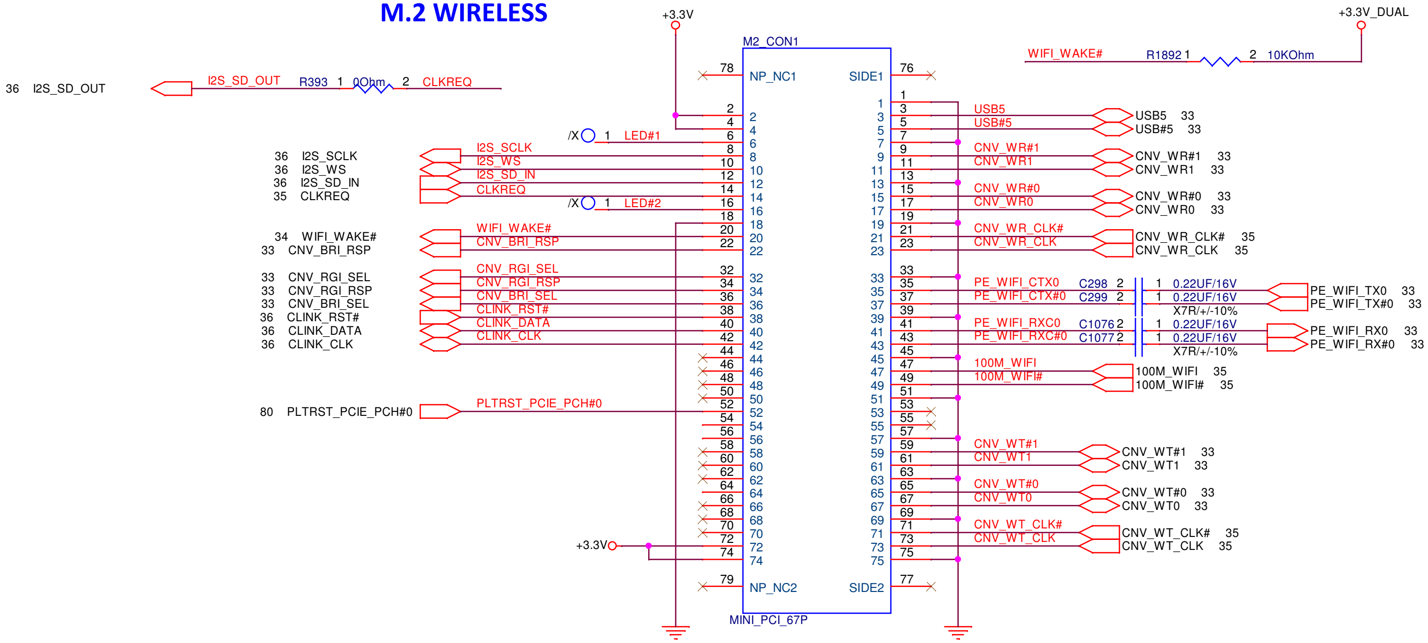
+3.3V
+3.3V_DUAL
M2_CON1
NP_NC1
SIDE1
NP_NC2
SIDE2
MINI_PCI_67P
36 I2S_SD_OUT
I2S_SD_OUT
R393 1 0Ohm 2 CLKREQ
WIFI_WAKE#
R1892 1 2 10KOhm
/X 1 LED#1
/X 1 LED#2
36 I2S_SCLK
36 I2S_WS
36 I2S_SD_IN
35 CLKREQ
I2S_SCLK
I2S_WS
I2S_SD_IN
CLKREQ
34 WIFI_WAKE#
33 CNV_BRI_RSP
WIFI_WAKE#
CNV_BRI_RSP
33 CNV_RGI_SEL
33 CNV_RGI_RSP
33 CNV_BRI_SEL
36 CLINK_RST#
36 CLINK_DATA
36 CLINK_CLK
CNV_RGI_SEL
CNV_RGI_RSP
CNV_BRI_SEL
CLINK_RST#
CLINK_DATA
CLINK_CLK
80 PLTRST_PCIE_PCH#0
PLTRST_PCIE_PCH#0
USB5
USB#5
USB5 33
USB#5 33
CNV_WR#1
CNV_WR1
CNV_WR#1 33
CNV_WR1 33
CNV_WR#0
CNV_WR0
CNV_WR#0 33
CNV_WR0 33
CNV_WR_CLK#
CNV_WR_CLK
CNV_WR_CLK# 35
CNV_WR_CLK 35
PE_WIFI_CTX0
PE_WIFI_CTX#0
C298 2 1 0.22UF/16V
C299 2 1 0.22UF/16V
X7R/+/-10%
PE_WIFI_TX0 33
PE_WIFI_TX#0 33
PE_WIFI_RXC0
PE_WIFI_RXC#0
C1076 2 1 0.22UF/16V
C1077 2 1 0.22UF/16V
X7R/+/-10%
PE_WIFI_RX0 33
PE_WIFI_RX#0 33
100M_WIFI
100M_WIFI#
100M_WIFI 35
100M_WIFI# 35
CNV_WT#1
CNV_WT1
CNV_WT#1 33
CNV_WT1 33
CNV_WT#0
CNV_WT0
CNV_WT#0 33
CNV_WT0 33
CNV_WT_CLK#
CNV_WT_CLK
CNV_WT_CLK# 35
CNV_WT_CLK 35
+3.3V

M.2 SSD

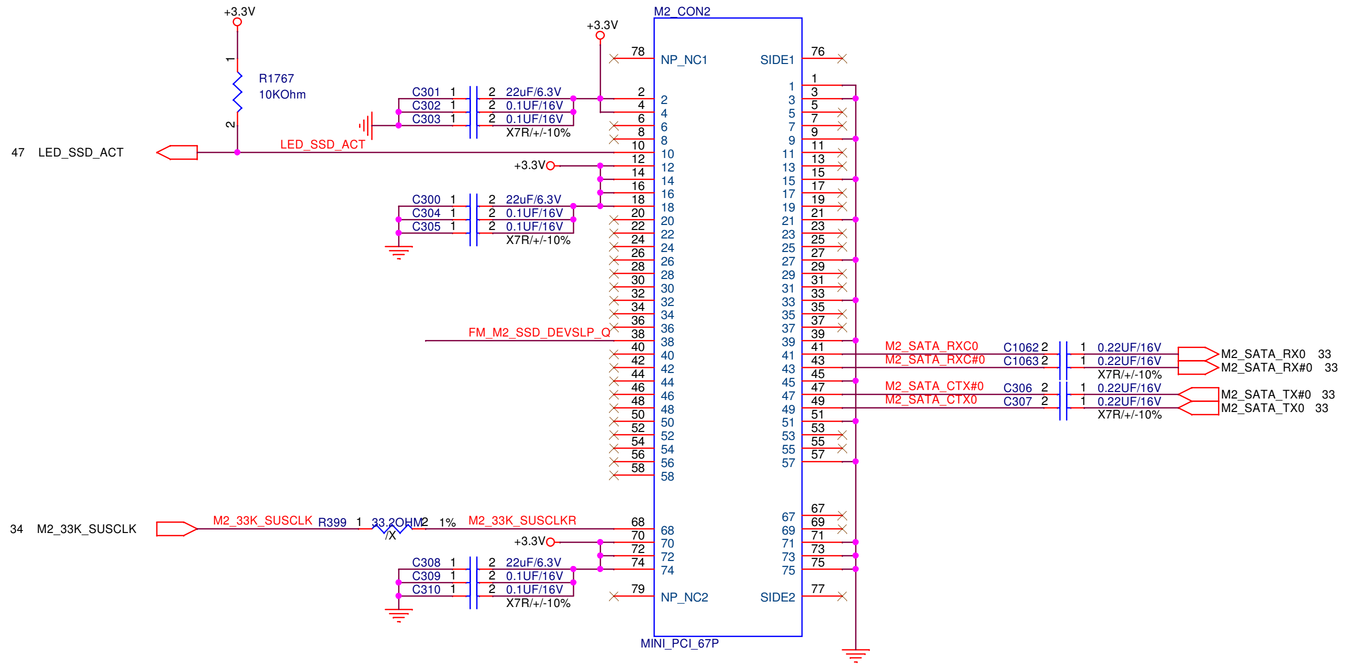
+3.3V
R1767
10KOhm
47 LED_SSD_ACT
LED_SSD_ACT
M2_CON2
NP_NC1
SIDE1
NP_NC2
SIDE2
MINI_PCI_67P
C301 1 2 22uF/6.3V
C302 1 2 0.1UF/16V
C303 1 2 0.1UF/16V
X7R/+/-10%
C300 1 2 22uF/6.3V
C304 1 2 0.1UF/16V
C305 1 2 0.1UF/16V
X7R/+/-10%
FM_M2_SSD_DEVSLP_Q
M2_SATA_RXC0
M2_SATA_RXC#0
C1062 2 1 0.22UF/16V
C1063 2 1 0.22UF/16V
X7R/+/-10%
M2_SATA_RX0 33
M2_SATA_RX#0 33
M2_SATA_CTX#0
M2_SATA_CTX0
C306 2 1 0.22UF/16V
C307 2 1 0.22UF/16V
X7R/+/-10%
M2_SATA_TX#0 33
M2_SATA_TX0 33
34 M2_33K_SUSCLK
M2_33K_SUSCLK
R399 1 33.2OHM 2 1%
/X
M2_33K_SUSCLKR
C308 1 2 22uF/6.3V
C309 1 2 0.1UF/16V
C310 1 2 0.1UF/16V
X7R/+/-10%

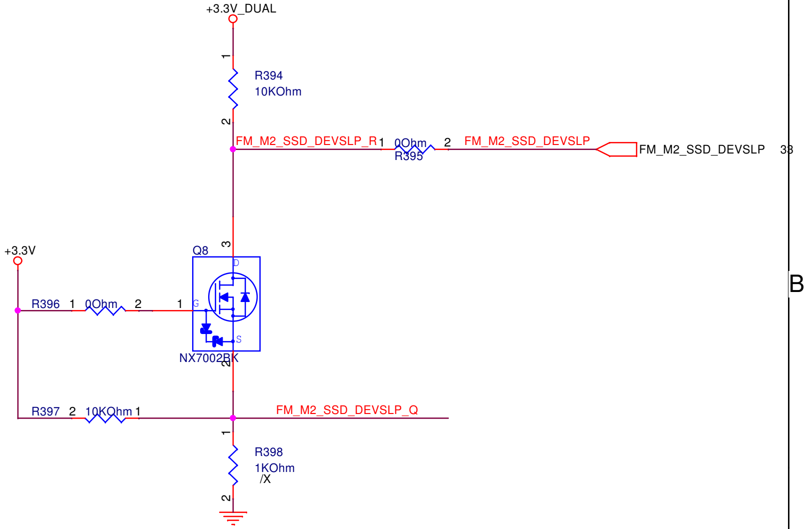
+3.3V_DUAL
R394
10KOhm
FM_M2_SSD_DEVSLP_R
1 0Ohm 2
R395
FM_M2_SSD_DEVSLP
FM_M2_SSD_DEVSLP 38
+3.3V
Q8
NX7002BK
R396 1 0Ohm 2
R397 2 10KOhm 1
FM_M2_SSD_DEVSLP_Q
R398
1KOhm
/X

<Variant Name>

PEGATRON

PEGATRON PROPRIETARY AND CONFIDENTIAL

Title : 041 M.2 CONN/WIRE

PEGATRON CORPORATION

Engineer: Tom_Liao

Size	Project Name	Rev
A3	CLCL-N	1.00

Date: Tuesday, November 27, 2018 Sheet 41 of 110

Merge XDP

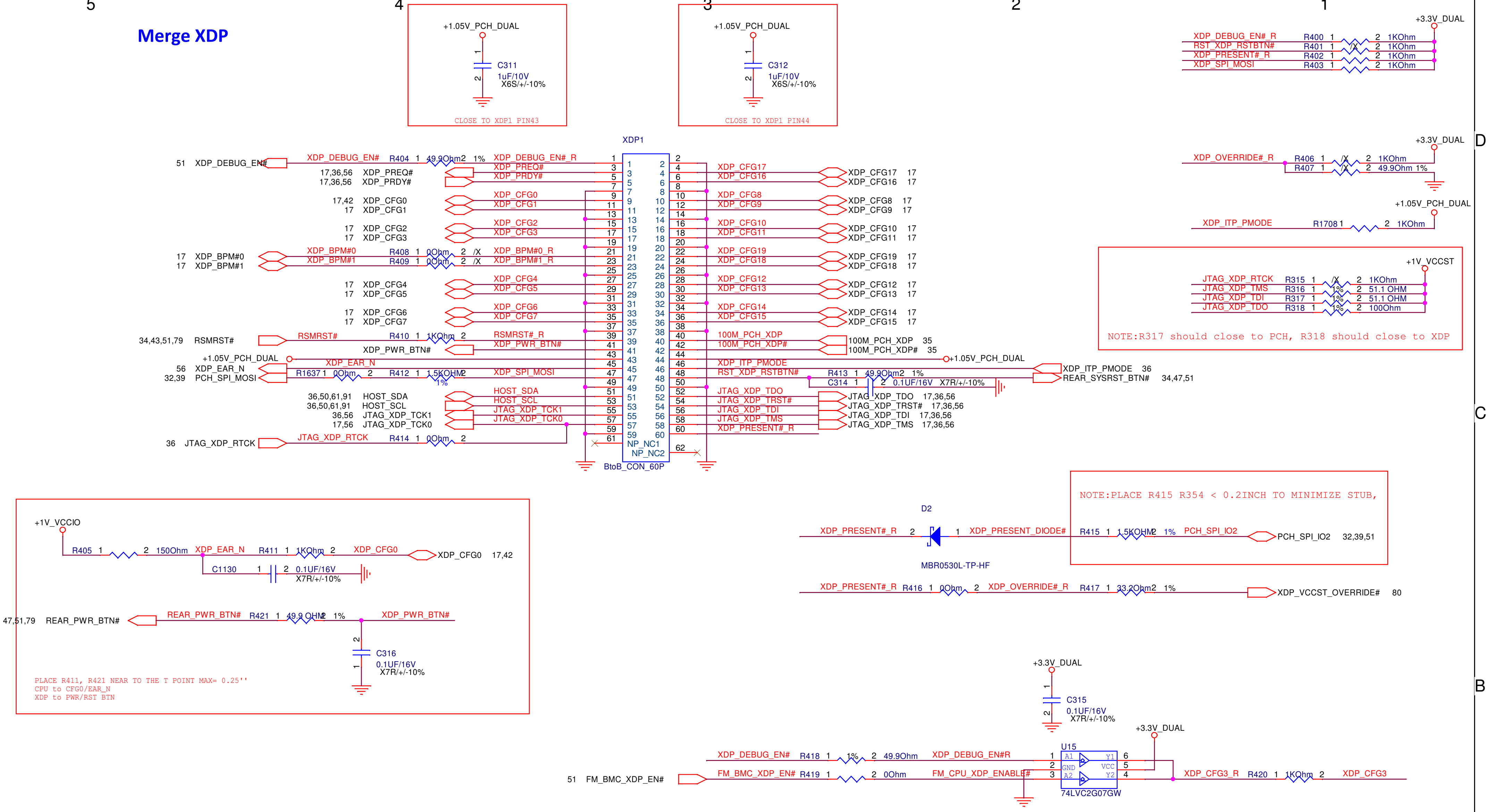
+1.05V_PCH_DUAL
C311
1uF/10V
X6S/+/-10%
CLOSE TO XDP1 PIN43
C312
CLOSE TO XDP1 PIN44
+3.3V_DUAL
XDP_DEBUG_EN#_R R400 1KOhm
RST_XDP_RSTBTN# R401 1KOhm
XDP_PRESENT#_R R402 1KOhm
XDP_SPI_MOSI R403 1KOhm
XDP_OVERRIDE#_R R406 1KOhm
R407 49.9Ohm 1%
XDP_ITP_PMODE R1708 1KOhm
+1V_VCCST
JTAG_XDP_RTCK R315 1KOhm
JTAG_XDP_TMS R316 51.1 OHM
JTAG_XDP_TDI R317 51.1 OHM
JTAG_XDP_TDO R318 100Ohm
NOTE:R317 should close to PCH, R318 should close to XDP
XDP1
BtoB_CON_60P
NP_NC1
NP_NC2
51 XDP_DEBUG_EN# R404 49.9Ohm 1% XDP_DEBUG_EN#_R
17,36,56 XDP_PREQ#
17,36,56 XDP_PRDY#
17,42 XDP_CFG0
17 XDP_CFG1
17 XDP_CFG2
17 XDP_CFG3
17 XDP_BPM#0 R408 0Ohm XDP_BPM#0_R
17 XDP_BPM#1 R409 0Ohm XDP_BPM#1_R
17 XDP_CFG4
17 XDP_CFG5
17 XDP_CFG6
17 XDP_CFG7
34,43,51,79 RSMRST# R410 1KOhm RSMRST#_R
XDP_PWR_BTN#
+1.05V_PCH_DUAL
56 XDP_EAR_N
32,39 PCH_SPI_MOSI R1637 0Ohm R412 1.5KOHM 1% XDP_SPI_MOSI
36,50,61,91 HOST_SDA
36,50,61,91 HOST_SCL
36,56 JTAG_XDP_TCK1
17,56 JTAG_XDP_TCK0
36 JTAG_XDP_RTCK R414 0Ohm
XDP_CFG17 17
XDP_CFG16 17
XDP_CFG8 17
XDP_CFG9 17
XDP_CFG10 17
XDP_CFG11 17
XDP_CFG19 17
XDP_CFG18 17
XDP_CFG12 17
XDP_CFG13 17
XDP_CFG14 17
XDP_CFG15 17
100M_PCH_XDP 35
100M_PCH_XDP# 35
XDP_ITP_PMODE 36
RST_XDP_RSTBTN# R413 49.9Ohm 1%
REAR_SYSRST_BTN# 34,47,51
C314 0.1UF/16V X7R/+/-10%
JTAG_XDP_TDO 17,36,56
JTAG_XDP_TRST# 17,36,56
JTAG_XDP_TDI 17,36,56
JTAG_XDP_TMS 17,36,56
XDP_PRESENT#_R
+1V_VCCIO
R405 150Ohm
XDP_EAR_N R411 1KOhm XDP_CFG0
C1130 0.1UF/16V X7R/+/-10%
XDP_CFG0 17,42
47,51,79 REAR_PWR_BTN# R421 49.9 OHM 1% XDP_PWR_BTN#
C316 0.1UF/16V X7R/+/-10%
PLACE R411, R421 NEAR TO THE T POINT MAX= 0.25''
CPU to CFG0/EAR_N
XDP to PWR/RST BTN
NOTE:PLACE R415 R354 < 0.2INCH TO MINIMIZE STUB,
D2
MBR0530L-TP-HF
XDP_PRESENT#_R
XDP_PRESENT_DIODE#
R415 1.5KOHM 1%
PCH_SPI_IO2
PCH_SPI_IO2 32,39,51
R416 0Ohm XDP_OVERRIDE#_R R417 33.2Ohm 1%
XDP_VCCST_OVERRIDE# 80
+3.3V_DUAL
C315 0.1UF/16V X7R/+/-10%
U15
74LVC2G07GW
A1 GND A2 Y1 VCC Y2
XDP_DEBUG_EN# R418 1% 49.9Ohm XDP_DEBUG_EN#R
51 FM_BMC_XDP_EN# FM_BMC_XDP_EN# R419 0Ohm FM_CPU_XDP_ENABLE#
XDP_CFG3_R R420 1KOhm XDP_CFG3

LPC/ESPI DEBUG PORT

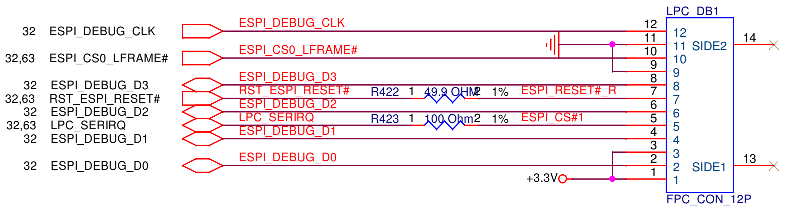
LPC_DB1
FPC_CON_12P
SIDE2
SIDE1
32 ESPI_DEBUG_CLK
32,63 ESPI_CS0_LFRAME#
32 ESPI_DEBUG_D3
32,63 RST_ESPI_RESET# R422 49.9 OHM 1% ESPI_RESET#_R
32 ESPI_DEBUG_D2
32,63 LPC_SERIRQ R423 100 Ohm 1% ESPI_CS#1
32 ESPI_DEBUG_D1
32 ESPI_DEBUG_D0
+3.3V

<Variant Name>

PEGATRON

PEGATRON PROPRIETARY AND CONFIDENTIAL

Title : 042 Merge XDP/DEBU

PEGATRON CORPORATION

Engineer: Tom_Liao

Size	Project Name	Rev
A3	CLCL-N	1.00

Date: Tuesday, November 27, 2018 Sheet 42 of 110

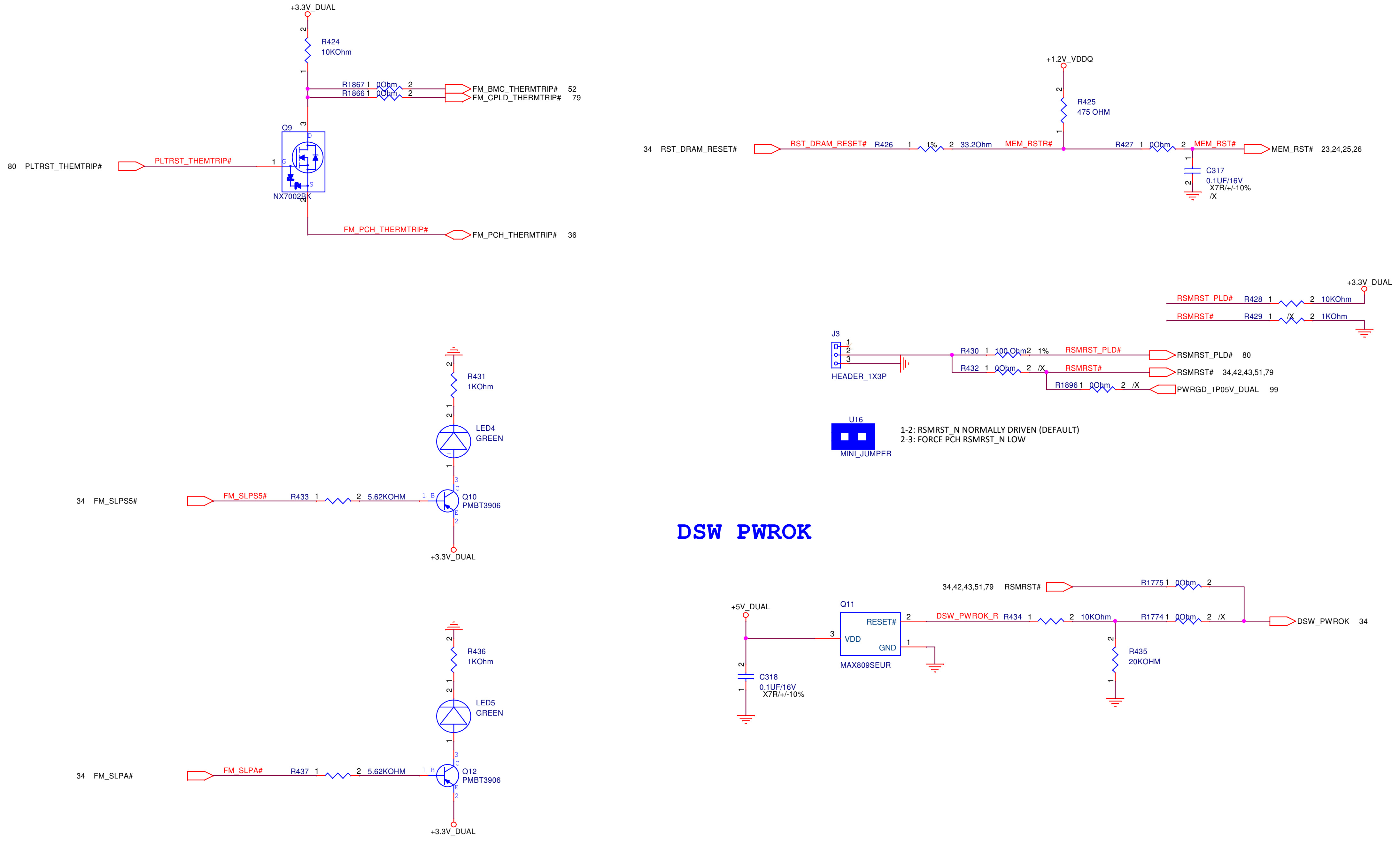
+3.3V_DUAL
R424
10KOhm
R1867 1 0Ohm 2
R1866 1 0Ohm 2
FM_BMC_THERMTRIP# 52
FM_CPLD_THERMTRIP# 79
Q9
NX7002BK
80 PLTRST_THEMTRIP#
PLTRST_THEMTRIP#
FM_PCH_THERMTRIP#
FM_PCH_THERMTRIP# 36
+1.2V_VDDQ
R425
475 OHM
34 RST_DRAM_RESET#
RST_DRAM_RESET#
R426 1 1% 2 33.2Ohm
MEM_RSTR#
R427 1 0Ohm 2
MEM_RST#
MEM_RST# 23,24,25,26
C317
0.1UF/16V
X7R/+/-10%
/X
+3.3V_DUAL
RSMRST_PLD# R428 1 2 10KOhm
RSMRST# R429 1 /X 2 1KOhm
J3
HEADER_1X3P
R430 1 100 Ohm 2 1%
RSMRST_PLD#
RSMRST_PLD# 80
R432 1 0Ohm 2 /X
RSMRST#
RSMRST# 34,42,43,51,79
R1896 1 0Ohm 2 /X
PWRGD_1P05V_DUAL 99
U16
MINI_JUMPER
1-2: RSMRST_N NORMALLY DRIVEN (DEFAULT)
2-3: FORCE PCH RSMRST_N LOW
R431
1KOhm
LED4
GREEN
34 FM_SLPS5#
FM_SLPS5#
R433 1 2 5.62KOHM
Q10
PMBT3906
+3.3V_DUAL
DSW PWROK
34,42,43,51,79 RSMRST#
R1775 1 0Ohm 2
+5V_DUAL
Q11
RESET#
VDD
GND
MAX809SEUR
DSW_PWROK_R
R434 1 2 10KOhm
R1774 1 0Ohm 2 /X
DSW_PWROK 34
R435
20KOHM
C318
0.1UF/16V
X7R/+/-10%
R436
1KOhm
LED5
GREEN
34 FM_SLPA#
FM_SLPA#
R437 1 2 5.62KOHM
Q12
PMBT3906
+3.3V_DUAL

<Variant Name>

PEGATRON Title : **043 PCH SIDEBAND**
PEGATRON PROPRIETARY AND CONFIDENTIAL
PEGATRON CORPORATION Engineer: *Tom_Liao*

Size	Project Name	Rev
A3	CLCL-N	1.00

Date: Tuesday, November 27, 2018 Sheet 43 of 110

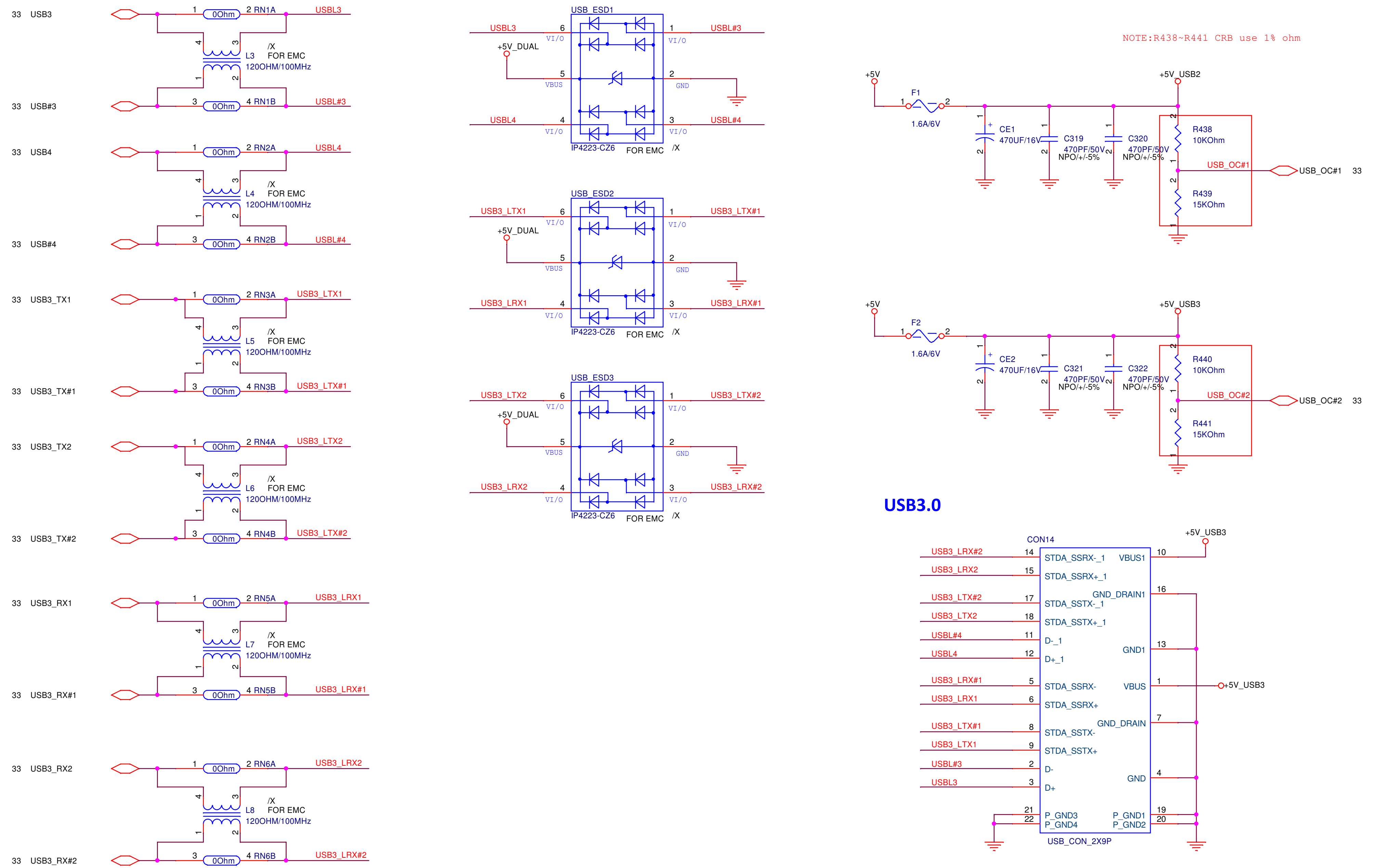
33 USB3
1 0Ohm 2 RN1A
USBL3
/X
L3 FOR EMC
120OHM/100MHz
33 USB#3
3 0Ohm 4 RN1B
USBL#3
33 USB4
1 0Ohm 2 RN2A
USBL4
L4 FOR EMC
120OHM/100MHz
33 USB#4
3 0Ohm 4 RN2B
USBL#4
33 USB3_TX1
1 0Ohm 2 RN3A
USB3_LTX1
L5 FOR EMC
120OHM/100MHz
33 USB3_TX#1
3 0Ohm 4 RN3B
USB3_LTX#1
33 USB3_TX2
1 0Ohm 2 RN4A
USB3_LTX2
L6 FOR EMC
120OHM/100MHz
33 USB3_TX#2
3 0Ohm 4 RN4B
USB3_LTX#2
33 USB3_RX1
1 0Ohm 2 RN5A
USB3_LRX1
L7 FOR EMC
120OHM/100MHz
33 USB3_RX#1
3 0Ohm 4 RN5B
USB3_LRX#1
33 USB3_RX2
1 0Ohm 2 RN6A
USB3_LRX2
L8 FOR EMC
120OHM/100MHz
33 USB3_RX#2
3 0Ohm 4 RN6B
USB3_LRX#2
USB_ESD1
USBL3 6 VI/O
+5V_DUAL
5 VBUS
USBL4 4 VI/O
1 VI/O USBL#3
2 GND
3 VI/O USBL#4
IP4223-CZ6 FOR EMC /X
USB_ESD2
USB3_LTX1 6 VI/O
+5V_DUAL
5 VBUS
USB3_LRX1 4 VI/O
1 VI/O USB3_LTX#1
2 GND
3 VI/O USB3_LRX#1
IP4223-CZ6 FOR EMC /X
USB_ESD3
USB3_LTX2 6 VI/O
+5V_DUAL
5 VBUS
USB3_LRX2 4 VI/O
1 VI/O USB3_LTX#2
2 GND
3 VI/O USB3_LRX#2
IP4223-CZ6 FOR EMC /X
NOTE:R438~R441 CRB use 1% ohm
+5V
F1
1.6A/6V
+5V_USB2
CE1 470UF/16V
C319 470PF/50V NPO/+/-5%
C320 470PF/50V NPO/+/-5%
R438 10KOhm
USB_OC#1
USB_OC#1 33
R439 15KOhm
+5V
F2
1.6A/6V
+5V_USB3
CE2 470UF/16V
C321 470PF/50V NPO/+/-5%
C322 470PF/50V NPO/+/-5%
R440 10KOhm
USB_OC#2
USB_OC#2 33
R441 15KOhm
USB3.0
CON14
+5V_USB3
USB3_LRX#2 14 STDA_SSRX-_1
USB3_LRX2 15 STDA_SSRX+_1
USB3_LTX#2 17 STDA_SSTX-_1
USB3_LTX2 18 STDA_SSTX+_1
USBL#4 11 D-_1
USBL4 12 D+_1
USB3_LRX#1 5 STDA_SSRX-
USB3_LRX1 6 STDA_SSRX+
USB3_LTX#1 8 STDA_SSTX-
USB3_LTX1 9 STDA_SSTX+
USBL#3 2 D-
USBL3 3 D+
21 P_GND3
22 P_GND4
VBUS1 10
GND_DRAIN1 16
GND1 13
VBUS 1 +5V_USB3
GND_DRAIN 7
GND 4
P_GND1 19
P_GND2 20
USB_CON_2X9P

<Variant Name>

PEGATRON Title : **044 USB3**
PEGATRON PROPRIETARY AND CONFIDENTIAL
PEGATRON CORPORATION Engineer: *Tom_Liao*

Size	Project Name	Rev
A3	CLCL-N	1.00

Date: Tuesday, November 27, 2018 Sheet 44 of 110

ESPI OR LPC

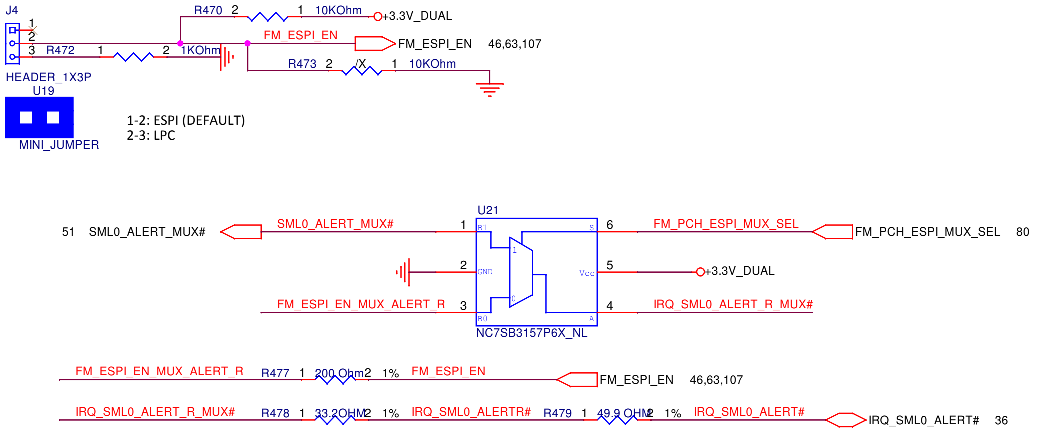
J4
R470 2 1 10KOhm
+3.3V_DUAL
R472 1 2 1KOhm
FM_ESPI_EN
FM_ESPI_EN 46,63,107
R473 2 /X 1 10KOhm
HEADER_1X3P
U19
MINI_JUMPER
U21
51 SML0_ALERT_MUX#
SML0_ALERT_MUX#
FM_PCH_ESPI_MUX_SEL
FM_PCH_ESPI_MUX_SEL 80
+3.3V_DUAL
FM_ESPI_EN_MUX_ALERT_R
IRQ_SML0_ALERT_R_MUX#
NC7SB3157P6X_NL
FM_ESPI_EN_MUX_ALERT_R R477 1 200 Ohm 2 1% FM_ESPI_EN
FM_ESPI_EN 46,63,107
IRQ_SML0_ALERT_R_MUX# R478 1 33.2OHM 2 1% IRQ_SML0_ALERTR# R479 1 49.9 OHM 2 1% IRQ_SML0_ALERT#
IRQ_SML0_ALERT# 36

1-2: ESPI (DEFAULT)
2-3: LPC

ESPI FLASH SHARING MODE

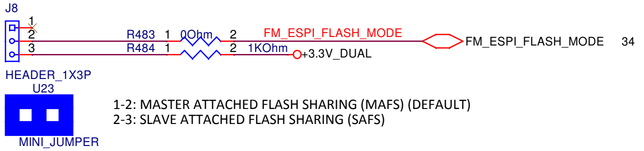
J8
R483 1 0Ohm 2
FM_ESPI_FLASH_MODE
R484 1 2 1KOhm
+3.3V_DUAL
FM_ESPI_FLASH_MODE 34
HEADER_1X3P
U23
MINI_JUMPER

1-2: MASTER ATTACHED FLASH SHARING (MAFS) (DEFAULT)
2-3: SLAVE ATTACHED FLASH SHARING (SAFS)

BIOS SWAP SOFTWARE OVERRIDE JUMPER

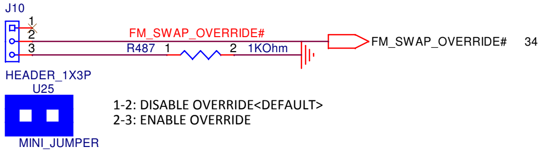
J10
FM_SWAP_OVERRIDE#
R487 1 2 1KOhm
FM_SWAP_OVERRIDE# 34
HEADER_1X3P
U25
MINI_JUMPER

1-2: DISABLE OVERRIDE<DEFAULT>
2-3: ENABLE OVERRIDE

BIOS RECOVERY MODE / TOP SWAP OVERRIDE JUMPER

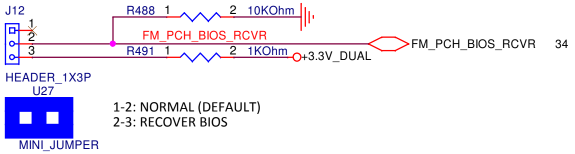
J12
R488 1 2 10KOhm
FM_PCH_BIOS_RCVR
R491 1 2 1KOhm
+3.3V_DUAL
FM_PCH_BIOS_RCVR 34
HEADER_1X3P
U27
MINI_JUMPER

1-2: NORMAL (DEFAULT)
2-3: RECOVER BIOS

FLASH SECURITY OVERRIDE

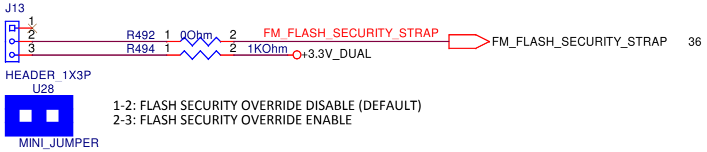
J13
R492 1 0Ohm 2
FM_FLASH_SECURITY_STRAP
R494 1 2 1KOhm
+3.3V_DUAL
FM_FLASH_SECURITY_STRAP 36
HEADER_1X3P
U28
MINI_JUMPER

1-2: FLASH SECURITY OVERRIDE DISABLE (DEFAULT)
2-3: FLASH SECURITY OVERRIDE ENABLE

PASSWORD CLEAR JUMPER

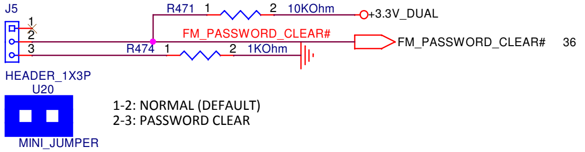
J5
R471 1 2 10KOhm
+3.3V_DUAL
FM_PASSWORD_CLEAR#
R474 1 2 1KOhm
FM_PASSWORD_CLEAR# 36
HEADER_1X3P
U20
MINI_JUMPER

1-2: NORMAL (DEFAULT)
2-3: PASSWORD CLEAR

MANUFACTURING MODE JUMPER

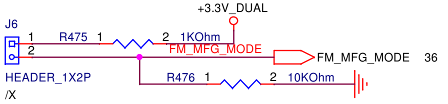
+3.3V_DUAL
J6
R475 1 2 1KOhm
FM_MFG_MODE
FM_MFG_MODE 36
R476 1 2 10KOhm
HEADER_1X2P
/X

BIOS ADV FUNCTIONS

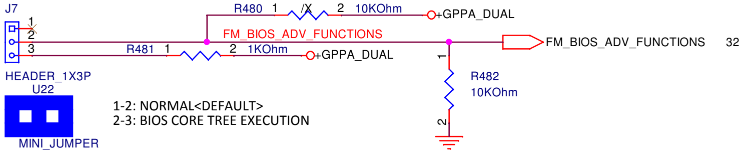
J7
R480 1 /X 2 10KOhm
+GPPA_DUAL
FM_BIOS_ADV_FUNCTIONS
R481 1 2 1KOhm
+GPPA_DUAL
FM_BIOS_ADV_FUNCTIONS 32
R482
10KOhm
HEADER_1X3P
U22
MINI_JUMPER

1-2: NORMAL<DEFAULT>
2-3: BIOS CORE TREE EXECUTION

ME FIRMWARE UPDATE

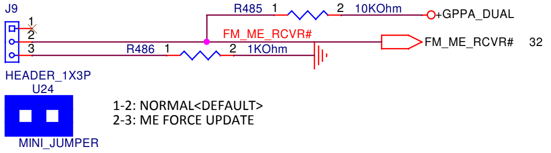
J9
R485 1 2 10KOhm
+GPPA_DUAL
FM_ME_RCVR#
R486 1 2 1KOhm
FM_ME_RCVR# 32
HEADER_1X3P
U24
MINI_JUMPER

1-2: NORMAL<DEFAULT>
2-3: ME FORCE UPDATE

BOOT BIOS DEVICE

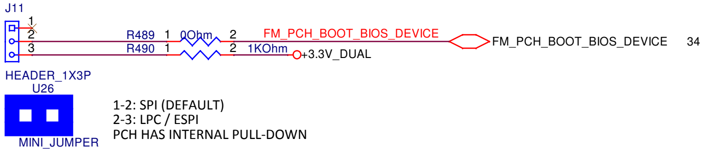
J11
R489 1 0Ohm 2
FM_PCH_BOOT_BIOS_DEVICE
R490 1 2 1KOhm
+3.3V_DUAL
FM_PCH_BOOT_BIOS_DEVICE 34
HEADER_1X3P
U26
MINI_JUMPER

1-2: SPI (DEFAULT)
2-3: LPC / ESPI
PCH HAS INTERNAL PULL-DOWN

BIOS IMAGE SWAP JUMPER

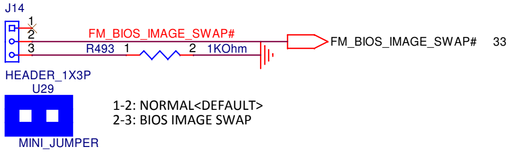
J14
FM_BIOS_IMAGE_SWAP#
R493 1 2 1KOhm
FM_BIOS_IMAGE_SWAP# 33
HEADER_1X3P
U29
MINI_JUMPER

1-2: NORMAL<DEFAULT>
2-3: BIOS IMAGE SWAP

<Variant Name>

PEGATRON
PEGATRON PROPRIETARY AND CONFIDENTIAL
PEGATRON CORPORATION
Title : 046 PCH HEADER
Engineer: Tom_Liao

Size	Project Name	Rev
A3	CLCL-N	1.00

Date: Tuesday, November 27, 2018 Sheet 46 of 110

Front LED

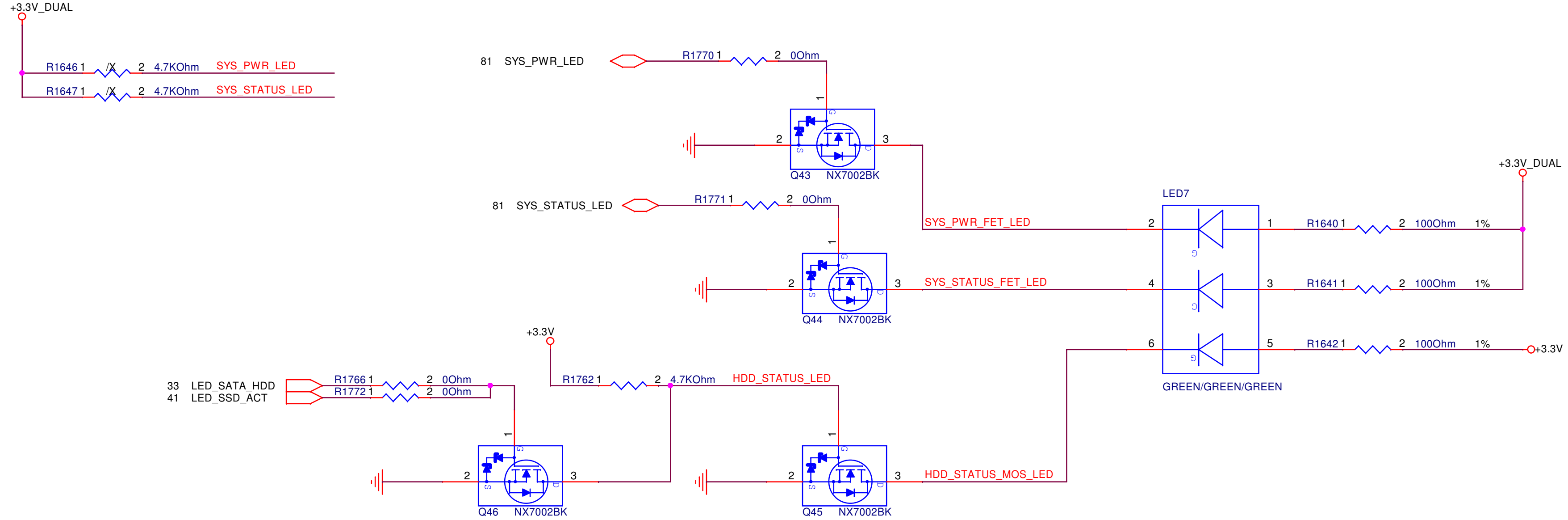
+3.3V_DUAL
R1646 1 /X 2 4.7KOhm SYS_PWR_LED
R1647 1 /X 2 4.7KOhm SYS_STATUS_LED
81 SYS_PWR_LED
R1770 1 2 0Ohm
Q43 NX7002BK
81 SYS_STATUS_LED
R1771 1 2 0Ohm
Q44 NX7002BK
SYS_PWR_FET_LED
SYS_STATUS_FET_LED
LED7
GREEN/GREEN/GREEN
R1640 1 2 100Ohm 1%
R1641 1 2 100Ohm 1%
R1642 1 2 100Ohm 1%
+3.3V_DUAL
+3.3V
+3.3V
33 LED_SATA_HDD
41 LED_SSD_ACT
R1766 1 2 0Ohm
R1772 1 2 0Ohm
R1762 1 2 4.7KOhm
HDD_STATUS_LED
Q46 NX7002BK
Q45 NX7002BK
HDD_STATUS_MOS_LED

Rear PWR BTN

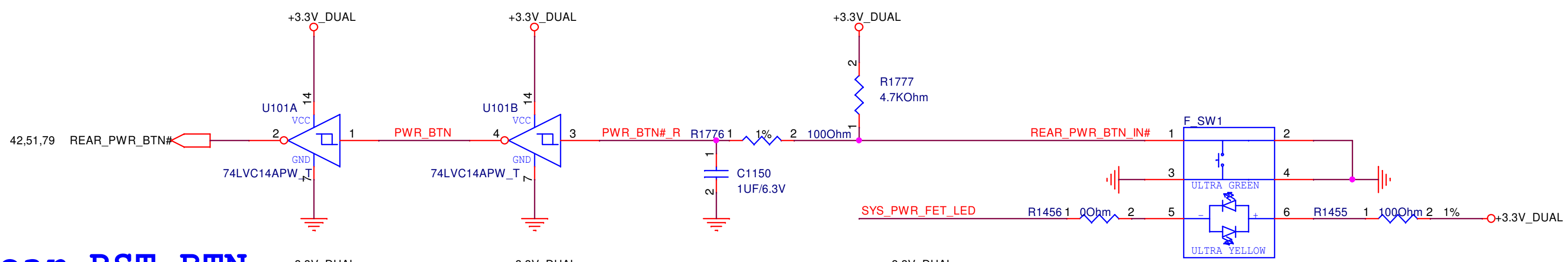
+3.3V_DUAL
+3.3V_DUAL
+3.3V_DUAL
42,51,79 REAR_PWR_BTN#
U101A
74LVC14APW_T
PWR_BTN
U101B
74LVC14APW_T
PWR_BTN#_R
R1776 1 1% 2 100Ohm
C1150
1UF/6.3V
R1777
4.7KOhm
REAR_PWR_BTN_IN#
F_SW1
ULTRA GREEN
ULTRA YELLOW
SYS_PWR_FET_LED
R1456 1 0Ohm 2
R1455 1 100Ohm 2 1%
+3.3V_DUAL
DIP_SWITCH_6P_WB

Rear RST BTN

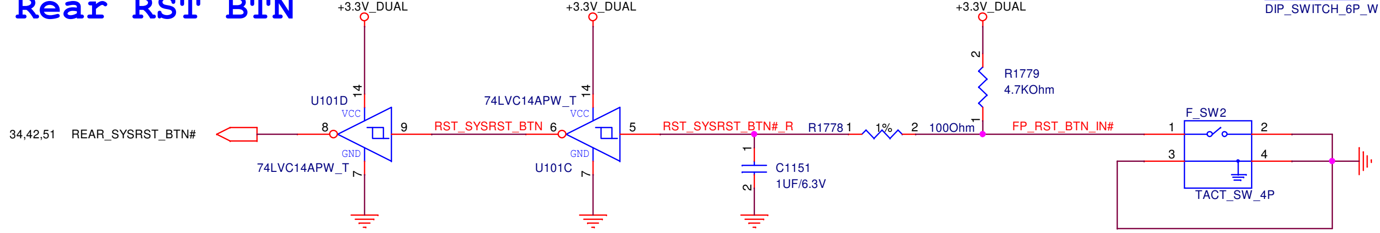
+3.3V_DUAL
+3.3V_DUAL
+3.3V_DUAL
34,42,51 REAR_SYSRST_BTN#
U101D
74LVC14APW_T
RST_SYSRST_BTN
74LVC14APW_T
U101C
RST_SYSRST_BTN#_R
R1778 1 1% 2 100Ohm
C1151
1UF/6.3V
R1779
4.7KOhm
FP_RST_BTN_IN#
F_SW2
TACT_SW_4P

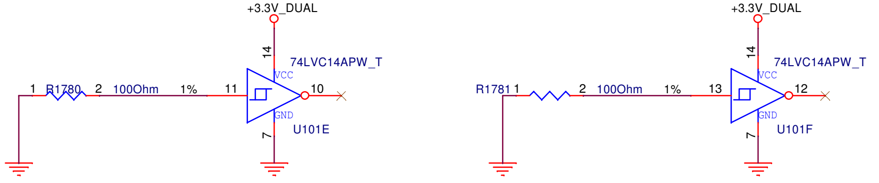
+3.3V_DUAL
1 R1780 2 100Ohm 1%
74LVC14APW_T
U101E
+3.3V_DUAL
R1781 1 2 100Ohm 1%
74LVC14APW_T
U101F

<Variant Name>

PEGATRON Title : 047 FP PWR

PEGATRON PROPRIETARY AND CONFIDENTIAL

PEGATRON CORPORATION Engineer: Tom_Liao

Size	Project Name	Rev
A3	CLCL-N	1.00

Date: Tuesday, November 27, 2018 Sheet 47 of 110

5 4 3 2 1

D

C

B

A

<Variant Name>

PEGATRON **Title :** <Title>
PEGATRON PROPRIETARY AND CONFIDENTIAL
PEGATRON CORPORATION **Engineer:** *Tom_Liao*

Size	Project Name	Rev
A3	CLCL-N	1.00

Date: Tuesday, November 27, 2018 Sheet 49 of 110

5 4 3 2 1

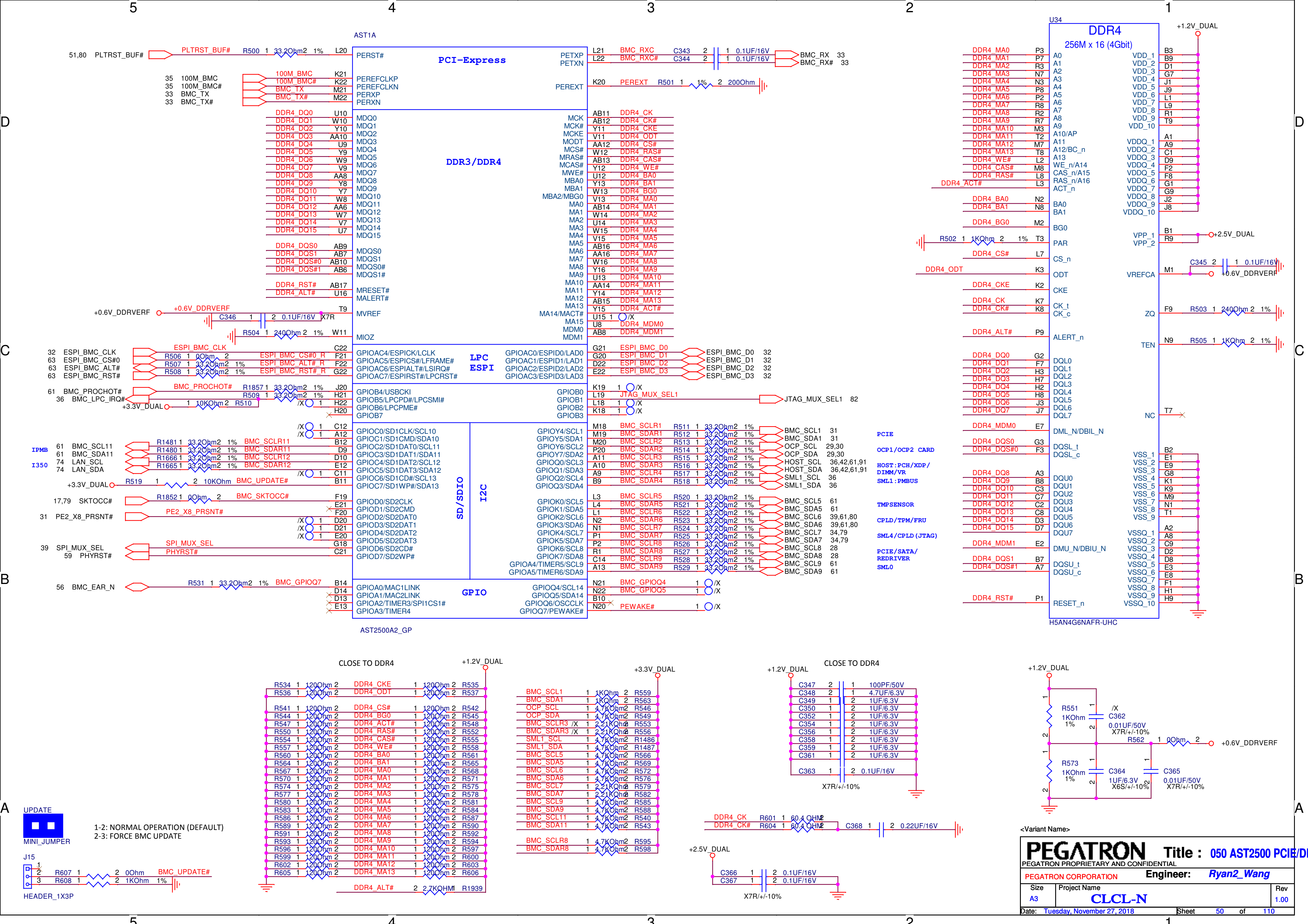
AST1A
PCI-Express
PERST#
PEREFCLKP
PEREFCLKN
PERXP
PERXN
PETXP
PETXN
PEREXT
51,80 PLTRST_BUF#
PLTRST_BUF#
R500 1 33.2Ohm 2 1%
35 100M_BMC
35 100M_BMC#
33 BMC_TX
33 BMC_TX#
BMC_RXC C343 2 1 0.1UF/16V
BMC_RXC# C344 2 1 0.1UF/16V
BMC_RX 33
BMC_RX# 33
PEREXT R501 1 1% 2 200Ohm
DDR3/DDR4
MDQ0 … MDQ15
MDQS0
MDQS1
MDQS0#
MDQS1#
MRESET#
MALERT#
MVREF
MIOZ
MCK
MCK#
MCKE
MODT
MCS#
MRAS#
MCAS#
MWE#
MBA0
MBA1
MBA2/MBG0
MA0 … MA15
MA14/MACT#
MDM0
MDM1
DDR4_DQ0 … DDR4_DQ15
DDR4_DQS0
DDR4_DQS1
DDR4_DQS#0
DDR4_DQS#1
DDR4_RST#
DDR4_ALT#
DDR4_CK
DDR4_CK#
DDR4_CKE
DDR4_ODT
DDR4_CS#
DDR4_RAS#
DDR4_CAS#
DDR4_WE#
DDR4_BA0
DDR4_BA1
DDR4_BG0
DDR4_MA0 … DDR4_MA13
DDR4_ACT#
DDR4_MDM0
DDR4_MDM1
+0.6V_DDRVERF
C346 1 2 0.1UF/16V X7R
R504 1 240Ohm 2 1%
LPC
ESPI
GPIOAC4/ESPICK/LCLK
GPIOAC5/ESPICS#/LFRAME#
GPIOAC6/ESPIALT#/LSIRQ#
GPIOAC7/ESPIRST#/LPCRST#
GPIOAC0/ESPID0/LAD0
GPIOAC1/ESPID1/LAD1
GPIOAC2/ESPID2/LAD2
GPIOAC3/ESPID3/LAD3
32 ESPI_BMC_CLK
63 ESPI_BMC_CS#0
63 ESPI_BMC_ALT#
63 ESPI_BMC_RST#
R506 1 0Ohm 2
R507 1 33.2Ohm 2 1%
R508 1 33.2Ohm 2 1%
ESPI_BMC_D0 32
ESPI_BMC_D1 32
ESPI_BMC_D2 32
ESPI_BMC_D3 32
61 BMC_PROCHOT#
36 BMC_LPC_IRQ#
+3.3V_DUAL
R1857 1 33.2Ohm 2 1%
R509 1 33.2Ohm 2 1%
1 10KOhm 2 R510
GPIOB4/USBCKI
GPIOB5/LPCPD#/LPCSMI#
GPIOB6/LPCPME#
GPIOB7
GPIOB0
GPIOB1
GPIOB2
GPIOB3
JTAG_MUX_SEL1
JTAG_MUX_SEL1 82
SD/SDIO
I2C
GPIOC0/SD1CLK/SCL10
GPIOC1/SD1CMD/SDA10
GPIOC2/SD1DAT0/SCL11
GPIOC3/SD1DAT1/SDA11
GPIOC4/SD1DAT2/SCL12
GPIOC5/SD1DAT3/SDA12
GPIOC6/SD1CD#/SCL13
GPIOC7/SD1WP#/SDA13
GPIOD0/SD2CLK
GPIOD1/SD2CMD
GPIOD2/SD2DAT0
GPIOD3/SD2DAT1
GPIOD4/SD2DAT2
GPIOD5/SD2DAT3
GPIOD6/SD2CD#
GPIOD7/SD2WP#
GPIOY4/SCL1
GPIOY5/SDA1
GPIOY6/SCL2
GPIOY7/SDA2
GPIOQ0/SCL3
GPIOQ1/SDA3
GPIOQ2/SCL4
GPIOQ3/SDA4
GPIOK0/SCL5
GPIOK1/SDA5
GPIOK2/SCL6
GPIOK3/SDA6
GPIOK4/SCL7
GPIOK5/SDA7
GPIOK6/SCL8
GPIOK7/SDA8
GPIOA4/TIMER5/SCL9
GPIOA5/TIMER6/SDA9
IPMB
I350
61 BMC_SCL11
61 BMC_SDA11
74 LAN_SCL
74 LAN_SDA
R1481 1 33.2Ohm 2 1%
R1480 1 33.2Ohm 2 1%
R1666 1 33.2Ohm 2 1%
R1665 1 33.2Ohm 2 1%
+3.3V_DUAL R519 1 2 10KOhm BMC_UPDATE#
17,79 SKTOCC# R1852 1 0Ohm 2 BMC_SKTOCC#
31 PE2_X8_PRSNT#
39 SPI_MUX_SEL
59 PHYRST#
BMC_SCLR1 … BMC_SDAR9
R511 … R529 1 33.2Ohm 2 1%
BMC_SCL1 31
BMC_SDA1 31
OCP_SCL 29,30
OCP_SDA 29,30
HOST_SCL 36,42,61,91
HOST_SDA 36,42,61,91
SML1_SCL 36
SML1_SDA 36
BMC_SCL5 61
BMC_SDA5 61
BMC_SCL6 39,61,80
BMC_SDA6 39,61,80
BMC_SCL7 34,79
BMC_SDA7 34,79
BMC_SCL8 28
BMC_SDA8 28
BMC_SCL9 61
BMC_SDA9 61
PCIE
OCP1/OCP2 CARD
HOST:PCH/XDP/DIMM/VR
SML1:PMBUS
TMPSENSOR
CPLD/TPM/FRU
SML4/CPLD(JTAG)
PCIE/SATA/REDRIVER
SML0
GPIO
56 BMC_EAR_N R531 1 33.2Ohm 2 1% BMC_GPIOQ7
GPIOA0/MAC1LINK
GPIOA1/MAC2LINK
GPIOA2/TIMER3/SPI1CS1#
GPIOA3/TIMER4
GPIOQ4/SCL14
GPIOQ5/SDA14
GPIOQ6/OSCCLK
GPIOQ7/PEWAKE#
BMC_GPIOQ4
BMC_GPIOQ5
PEWAKE#
AST2500A2_GP
U34
DDR4
256M x 16 (4Gbit)
+1.2V_DUAL
A0 … A9, A10/AP, A11, A12/BC_n, A13
WE_n/A14
CAS_n/A15
RAS_n/A16
ACT_n
BA0
BA1
BG0
PAR
CS_n
ODT
CKE
CK_t
CK_c
ALERT_n
TEN
DQL0 … DQL7
DML_N/DBIL_N
DQSL_t
DQSL_c
DQU0 … DQU7
DMU_N/DBIU_N
DQSU_t
DQSU_c
RESET_n
VDD_1 … VDD_10
VDDQ_1 … VDDQ_10
VPP_1
VPP_2
+2.5V_DUAL
VREFCA
C345 2 1 0.1UF/16V
+0.6V_DDRVERF
ZQ
R503 1 240Ohm 2 1%
R505 1 1KOhm 2 1%
R502 1 1KOhm 2 1%
NC
VSS_1 … VSS_9
VSSQ_1 … VSSQ_10
H5AN4G6NAFR-UHC
CLOSE TO DDR4
+1.2V_DUAL
R534 … R605 1 120Ohm 2
R535 … R606 1 120Ohm 2
DDR4_ALT# 2 2.7KOHM R1939
+3.3V_DUAL
BMC_SCL1 1 1KOhm 2 R559
BMC_SDA1 1 1KOhm 2 R563
OCP_SCL 1 4.7KOhm 2 R546
OCP_SDA 1 4.7KOhm 2 R549
BMC_SCLR3 /X 1 2.21KOhm 2 R553
BMC_SDAR3 /X 1 2.21KOhm 2 R556
SML1_SCL 1 4.7KOhm 2 R1486
SML1_SDA 1 4.7KOhm 2 R1487
BMC_SCL5 1 4.7KOhm 2 R566
BMC_SDA5 1 4.7KOhm 2 R569
BMC_SCL6 1 4.7KOhm 2 R572
BMC_SDA6 1 4.7KOhm 2 R576
BMC_SCL7 1 2.21KOhm 2 R579
BMC_SDA7 1 2.21KOhm 2 R582
BMC_SCL9 1 4.7KOhm 2 R585
BMC_SDA9 1 4.7KOhm 2 R588
BMC_SCL11 1 4.7KOhm 2 R540
BMC_SDA11 1 4.7KOhm 2 R543
BMC_SCLR8 1 4.7KOhm 2 R595
BMC_SDAR8 1 4.7KOhm 2 R598
CLOSE TO DDR4
C347 100PF/50V
C348 4.7UF/6.3V
C349 … C361 1UF/6.3V
C363 0.1UF/16V
X7R/+/-10%
DDR4_CK R601 1 60.4 OHM 2
DDR4_CK# R604 1 60.4 OHM 2
C368 1 2 0.22UF/16V
+2.5V_DUAL
C366 1 2 0.1UF/16V
C367 1 2 0.1UF/16V
X7R/+/-10%
R551 1KOhm 1%
C362 /X 0.01UF/50V X7R/+/-10%
R562 1 0Ohm 2 +0.6V_DDRVERF
R573 1KOhm 1%
C364 1UF/6.3V X6S/+/-10%
C365 0.01UF/50V X7R/+/-10%
UPDATE
MINI_JUMPER
1-2: NORMAL OPERATION (DEFAULT)
2-3: FORCE BMC UPDATE
J15
R607 1 2 0Ohm BMC_UPDATE#
R608 1 2 1KOhm 1%
HEADER_1X3P

<Variant Name>

PEGATRON **Title : 050 AST2500 PCIE/D**

PEGATRON PROPRIETARY AND CONFIDENTIAL

PEGATRON CORPORATION **Engineer:** *Ryan2_Wang*

Size	Project Name	Rev
A3	CLCL-N	1.00

Date: Tuesday, November 27, 2018 Sheet 50 of 110

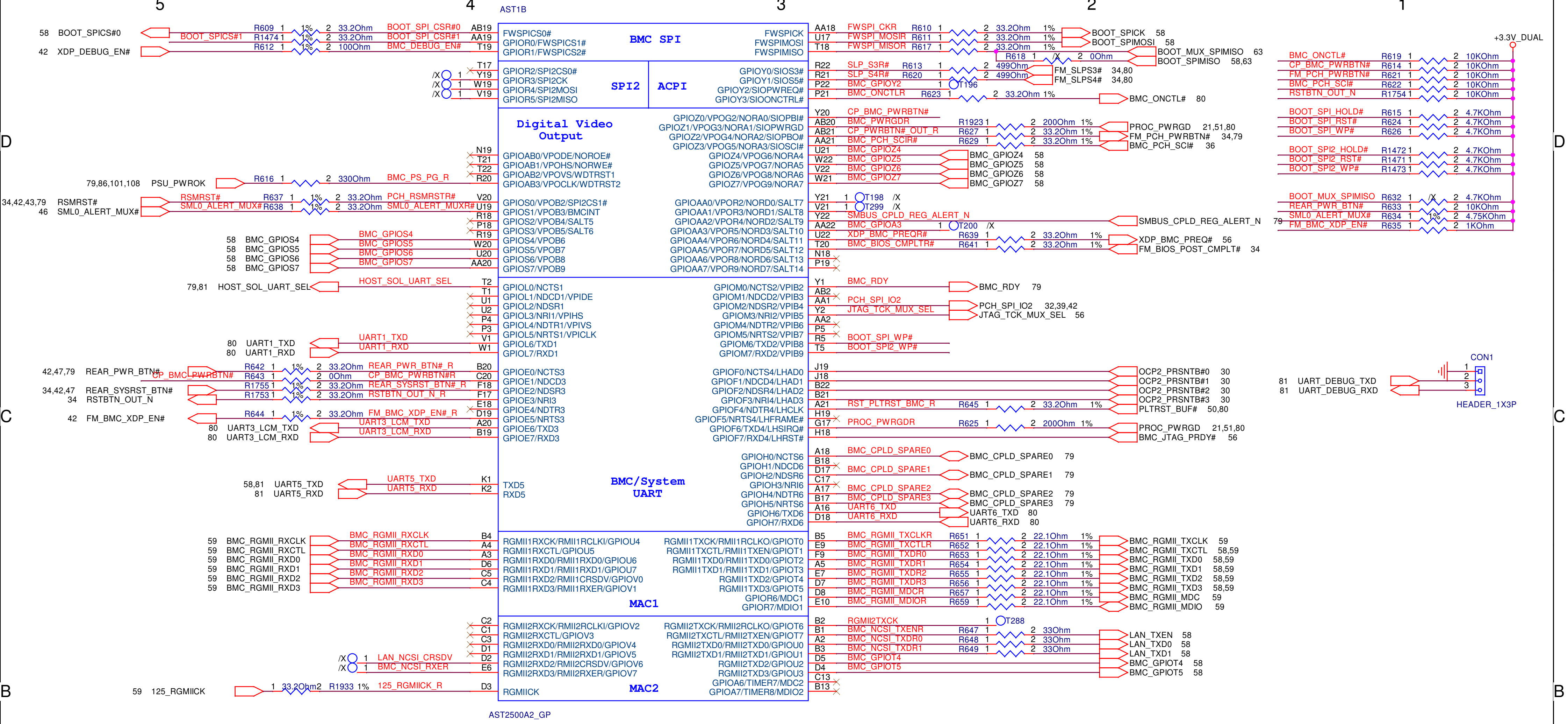
AST1B
BMC SPI
SPI2
ACPI
Digital Video Output
BMC/System UART
MAC1
MAC2
AST2500A2_GP
FWSPICS0#
GPIOR0/FWSPICS1#
GPIOR1/FWSPICS2#
FWSPICK
FWSPIMOSI
FWSPIMISO
GPIOR2/SPI2CS0#
GPIOR3/SPI2CK
GPIOR4/SPI2MOSI
GPIOR5/SPI2MISO
GPIOY0/SIOS3#
GPIOY1/SIOS5#
GPIOY2/SIOPWREQ#
GPIOY3/SIOONCTRL#
GPIOZ0/VPOG2/NORA0/SIOPBI#
GPIOZ1/VPOG3/NORA1/SIOPWRGD
GPIOZ2/VPOG4/NORA2/SIOPBO#
GPIOZ3/VPOG5/NORA3/SIOSCI#
GPIOZ4/VPOG6/NORA4
GPIOZ5/VPOG7/NORA5
GPIOZ6/VPOG8/NORA6
GPIOZ7/VPOG9/NORA7
GPIOAB0/VPODE/NOROE#
GPIOAB1/VPOHS/NORWE#
GPIOAB2/VPOVS/WDTRST1
GPIOAB3/VPOCLK/WDTRST2
GPIOS0/VPOB2/SPI2CS1#
GPIOS1/VPOB3/BMCINT
GPIOS2/VPOB4/SALT5
GPIOS3/VPOB5/SALT6
GPIOS4/VPOB6
GPIOS5/VPOB7
GPIOS6/VPOB8
GPIOS7/VPOB9
GPIOAA0/VPOR2/NORD0/SALT7
GPIOAA1/VPOR3/NORD1/SALT8
GPIOAA2/VPOR4/NORD2/SALT9
GPIOAA3/VPOR5/NORD3/SALT10
GPIOAA4/VPOR6/NORD4/SALT11
GPIOAA5/VPOR7/NORD5/SALT12
GPIOAA6/VPOR8/NORD6/SALT13
GPIOAA7/VPOR9/NORD7/SALT14
GPIOL0/NCTS1
GPIOL1/NDCD1/VPIDE
GPIOL2/NDSR1
GPIOL3/NRI1/VPIHS
GPIOL4/NDTR1/VPIVS
GPIOL5/NRTS1/VPICLK
GPIOL6/TXD1
GPIOL7/RXD1
GPIOM0/NCTS2/VPIB2
GPIOM1/NDCD2/VPIB3
GPIOM2/NDSR2/VPIB4
GPIOM3/NRI2/VPIB5
GPIOM4/NDTR2/VPIB6
GPIOM5/NRTS2/VPIB7
GPIOM6/TXD2/VPIB8
GPIOM7/RXD2/VPIB9
GPIOE0/NCTS3
GPIOE1/NDCD3
GPIOE2/NDSR3
GPIOE3/NRI3
GPIOE4/NDTR3
GPIOE5/NRTS3
GPIOE6/TXD3
GPIOE7/RXD3
GPIOF0/NCTS4/LHAD0
GPIOF1/NDCD4/LHAD1
GPIOF2/NDSR4/LHAD2
GPIOF3/NRI4/LHAD3
GPIOF4/NDTR4/LHCLK
GPIOF5/NRTS4/LHFRAME#
GPIOF6/TXD4/LHSIRQ#
GPIOF7/RXD4/LHRST#
TXD5
RXD5
GPIOH0/NCTS6
GPIOH1/NDCD6
GPIOH2/NDSR6
GPIOH3/NRI6
GPIOH4/NDTR6
GPIOH5/NRTS6
GPIOH6/TXD6
GPIOH7/RXD6
RGMII1RXCK/RMII1RCLKI/GPIOU4
RGMII1RXCTL/GPIOU5
RGMII1RXD0/RMII1RXD0/GPIOU6
RGMII1RXD1/RMII1RXD1/GPIOU7
RGMII1RXD2/RMII1CRSDV/GPIOV0
RGMII1RXD3/RMII1RXER/GPIOV1
RGMII1TXCK/RMII1RCLKO/GPIOT0
RGMII1TXCTL/RMII1TXEN/GPIOT1
RGMII1TXD0/RMII1TXD0/GPIOT2
RGMII1TXD1/RMII1TXD1/GPIOT3
RGMII1TXD2/GPIOT4
RGMII1TXD3/GPIOT5
GPIOR6/MDC1
GPIOR7/MDIO1
RGMII2RXCK/RMII2RCLKI/GPIOV2
RGMII2RXCTL/GPIOV3
RGMII2RXD0/RMII2RXD0/GPIOV4
RGMII2RXD1/RMII2RXD1/GPIOV5
RGMII2RXD2/RMII2CRSDV/GPIOV6
RGMII2RXD3/RMII2RXER/GPIOV7
RGMIICK
RGMII2TXCK/RMII2RCLKO/GPIOT6
RGMII2TXCTL/RMII2TXEN/GPIOT7
RGMII2TXD0/RMII2TXD0/GPIOU0
RGMII2TXD1/RMII2TXD1/GPIOU1
RGMII2TXD2/GPIOU2
RGMII2TXD3/GPIOU3
GPIOA6/TIMER7/MDC2
GPIOA7/TIMER8/MDIO2
58 BOOT_SPICS#0
42 XDP_DEBUG_EN#
BOOT_SPICS#1
R609 1 1% 2 33.2Ohm BOOT_SPI_CSR#0 AB19
R1474 1 1% 2 33.2Ohm BOOT_SPI_CSR#1 AA19
R612 1 1% 2 100Ohm BMC_DEBUG_EN# T19
T17 Y19 W19 V19
79,86,101,108 PSU_PWROK
R616 1 2 330Ohm BMC_PS_PG_R R20
N19 T21 T22
34,42,43,79 RSMRST#
46 SML0_ALERT_MUX#
RSMRST# R637 1 1% 2 33.2Ohm PCH_RSMRSTR# V20
SML0_ALERT_MUX# R638 1 1% 2 33.2Ohm SML0_ALERT_MUXR# U19
R18 P18 R19 W20 U20 AA20
58 BMC_GPIOS4
58 BMC_GPIOS5
58 BMC_GPIOS6
58 BMC_GPIOS7
79,81 HOST_SOL_UART_SEL
HOST_SOL_UART_SEL T2
T1 U1 U2 P4 P3 V1 W1
80 UART1_TXD
80 UART1_RXD
42,47,79 REAR_PWR_BTN#
CP_BMC_PWRBTN#
34,42,47 REAR_SYSRST_BTN#
34 RSTBTN_OUT_N
42 FM_BMC_XDP_EN#
R642 1 1% 2 33.2Ohm REAR_PWR_BTN#_R B20
R643 1 2 0Ohm CP_BMC_PWRBTN#R C20
R1755 1 1% 2 33.2Ohm REAR_SYSRST_BTN#_R F18
R1753 1 1% 2 33.2Ohm RSTBTN_OUT_N_R F17
E18
R644 1 1% 2 33.2Ohm FM_BMC_XDP_EN#_R D19
80 UART3_LCM_TXD A20
80 UART3_LCM_RXD B19
58,81 UART5_TXD K1
81 UART5_RXD K2
59 BMC_RGMII_RXCLK B4
59 BMC_RGMII_RXCTL A4
59 BMC_RGMII_RXD0 A3
59 BMC_RGMII_RXD1 D6
59 BMC_RGMII_RXD2 C5
59 BMC_RGMII_RXD3 C4
C2 C1 C3 D1
LAN_NCSI_CRSDV D2
BMC_NCSI_RXER E6
59 125_RGMIICK
1 33.2Ohm 2 R1933 1% 125_RGMIICK_R D3
AA18 FWSPI_CKR R610 1 2 33.2Ohm 1% BOOT_SPICK 58
U17 FWSPI_MOSIR R611 1 2 33.2Ohm 1% BOOT_SPIMOSI 58
T18 FWSPI_MISOR R617 1 2 33.2Ohm 1%
R618 1 2 0Ohm
BOOT_MUX_SPIMISO 63
BOOT_SPIMISO 58,63
R22 SLP_S3R# R613 1 2 499Ohm FM_SLPS3# 34,80
R21 SLP_S4R# R620 1 2 499Ohm FM_SLPS4# 34,80
P22 BMC_GPIOY2 T196
P21 BMC_ONCTLR R623 1 2 33.2Ohm 1% BMC_ONCTL# 80
Y20 CP_BMC_PWRBTN#
AB20 BMC_PWRGDR R1923 1 2 200Ohm 1% PROC_PWRGD 21,51,80
AB21 CP_PWRBTN#_OUT_R R627 1 2 33.2Ohm 1% FM_PCH_PWRBTN# 34,79
AA21 BMC_PCH_SCI#R R629 1 2 33.2Ohm 1% BMC_PCH_SCI# 36
U21 BMC_GPIOZ4 BMC_GPIOZ4 58
W22 BMC_GPIOZ5 BMC_GPIOZ5 58
V22 BMC_GPIOZ6 BMC_GPIOZ6 58
W21 BMC_GPIOZ7 BMC_GPIOZ7 58
Y21 T198
V21 T299
Y22 SMBUS_CPLD_REG_ALERT_N SMBUS_CPLD_REG_ALERT_N 79
AA22 BMC_GPIOA3 T200
U22 XDP_BMC_PREQR# R639 1 2 33.2Ohm 1% XDP_BMC_PREQ# 56
T20 BMC_BIOS_CMPLTR# R641 1 2 33.2Ohm 1% FM_BIOS_POST_CMPLT# 34
N18 P19
Y1 BMC_RDY BMC_RDY 79
AB2
AA1 PCH_SPI_IO2 PCH_SPI_IO2 32,39,42
Y2 JTAG_TCK_MUX_SEL JTAG_TCK_MUX_SEL 56
AA2 P5
R5 BOOT_SPI_WP#
T5 BOOT_SPI2_WP#
J19 OCP2_PRSNTB#0 30
J18 OCP2_PRSNTB#1 30
B22 OCP2_PRSNTB#2 30
B21 OCP2_PRSNTB#3 30
A21 RST_PLTRST_BMC_R R645 1 2 33.2Ohm 1% PLTRST_BUF# 50,80
H19
G17 PROC_PWRGDR R625 1 2 200Ohm 1% PROC_PWRGD 21,51,80
H18 BMC_JTAG_PRDY# 56
A18 BMC_CPLD_SPARE0 BMC_CPLD_SPARE0 79
B18
D17 BMC_CPLD_SPARE1 BMC_CPLD_SPARE1 79
C17
A17 BMC_CPLD_SPARE2 BMC_CPLD_SPARE2 79
B17 BMC_CPLD_SPARE3 BMC_CPLD_SPARE3 79
A16 UART6_TXD UART6_TXD 80
D18 UART6_RXD UART6_RXD 80
B5 BMC_RGMII_TXCLKR R651 1 2 22.1Ohm 1% BMC_RGMII_TXCLK 59
E9 BMC_RGMII_TXCTLR R652 1 2 22.1Ohm 1% BMC_RGMII_TXCTL 58,59
F9 BMC_RGMII_TXDR0 R653 1 2 22.1Ohm 1% BMC_RGMII_TXD0 58,59
A5 BMC_RGMII_TXDR1 R654 1 2 22.1Ohm 1% BMC_RGMII_TXD1 58,59
E7 BMC_RGMII_TXDR2 R655 1 2 22.1Ohm 1% BMC_RGMII_TXD2 58,59
D7 BMC_RGMII_TXDR3 R656 1 2 22.1Ohm 1% BMC_RGMII_TXD3 58,59
D8 BMC_RGMII_MDCR R657 1 2 22.1Ohm 1% BMC_RGMII_MDC 59
E10 BMC_RGMII_MDIOR R659 1 2 22.1Ohm 1% BMC_RGMII_MDIO 59
B2 RGMII2TXCK T288
B1 BMC_NCSI_TXENR R647 1 2 33Ohm LAN_TXEN 58
A2 BMC_NCSI_TXDR0 R648 1 2 33Ohm LAN_TXD0 58
B3 BMC_NCSI_TXDR1 R649 1 2 33Ohm LAN_TXD1 58
D5 BMC_GPIOT4 BMC_GPIOT4 58
D4 BMC_GPIOT5 BMC_GPIOT5 58
C13 B13
+3.3V_DUAL
BMC_ONCTL# R619 1 2 10KOhm
CP_BMC_PWRBTN# R614 1 2 10KOhm
FM_PCH_PWRBTN# R621 1 2 10KOhm
BMC_PCH_SCI# R622 1 2 10KOhm
RSTBTN_OUT_N R1754 1 2 10KOhm
BOOT_SPI_HOLD# R615 1 2 4.7KOhm
BOOT_SPI_RST# R624 1 2 4.7KOhm
BOOT_SPI_WP# R626 1 2 4.7KOhm
BOOT_SPI2_HOLD# R1472 1 2 4.7KOhm
BOOT_SPI2_RST# R1471 1 2 4.7KOhm
BOOT_SPI2_WP# R1473 1 2 4.7KOhm
BOOT_MUX_SPIMISO R632 1 2 4.7KOhm
REAR_PWR_BTN# R633 1 2 10KOhm
SML0_ALERT_MUX# R634 1 1% 2 4.75KOhm
FM_BMC_XDP_EN# R635 1 2 1KOhm
CON1
81 UART_DEBUG_TXD
81 UART_DEBUG_RXD
HEADER_1X3P

Firmware_SPI_FLASH

Second_Boot_FLASH

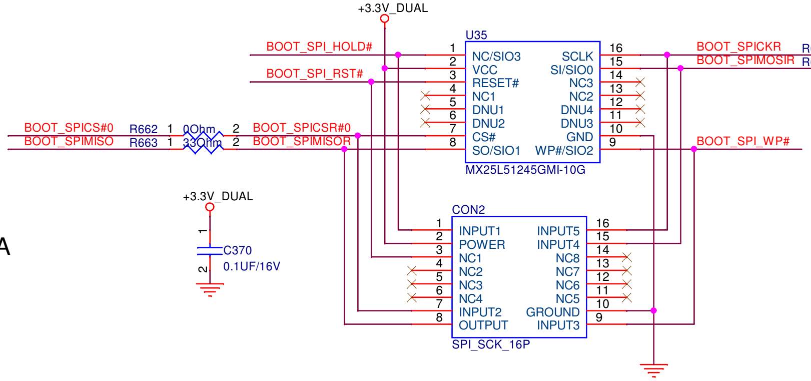
+3.3V_DUAL
U35
BOOT_SPI_HOLD#
BOOT_SPI_RST#
NC/SIO3
VCC
RESET#
NC1
DNU1
DNU2
CS#
SO/SIO1
SCLK
SI/SIO0
NC3
NC2
DNU4
DNU3
GND
WP#/SIO2
MX25L51245GMI-10G
BOOT_SPICKR R660 1 33.2Ohm 2 1% BOOT_SPICK
BOOT_SPIMOSIR R661 1 33.2Ohm 2 1% BOOT_SPIMOSI
BOOT_SPICS#0 R662 1 0Ohm 2 BOOT_SPICSR#0
BOOT_SPIMISO R663 1 33Ohm 2 BOOT_SPIMISOR
BOOT_SPI_WP#
+3.3V_DUAL
C370
0.1UF/16V
CON2
INPUT1
POWER
NC1
NC2
NC3
NC4
INPUT2
OUTPUT
INPUT5
INPUT4
NC8
NC7
NC6
NC5
GROUND
INPUT3
SPI_SCK_16P

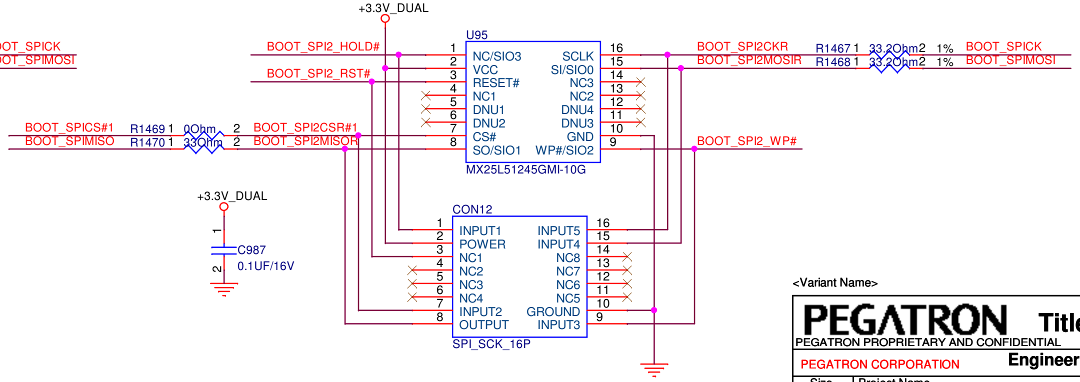
+3.3V_DUAL
U95
BOOT_SPI2_HOLD#
BOOT_SPI2_RST#
NC/SIO3
VCC
RESET#
NC1
DNU1
DNU2
CS#
SO/SIO1
SCLK
SI/SIO0
NC3
NC2
DNU4
DNU3
GND
WP#/SIO2
MX25L51245GMI-10G
BOOT_SPI2CKR R1467 1 33.2Ohm 2 1% BOOT_SPICK
BOOT_SPI2MOSIR R1468 1 33.2Ohm 2 1% BOOT_SPIMOSI
BOOT_SPICS#1 R1469 1 0Ohm 2 BOOT_SPI2CSR#1
BOOT_SPIMISO R1470 1 33Ohm 2 BOOT_SPI2MISOR
BOOT_SPI2_WP#
+3.3V_DUAL
C987
0.1UF/16V
CON12
INPUT1
POWER
NC1
NC2
NC3
NC4
INPUT2
OUTPUT
INPUT5
INPUT4
NC8
NC7
NC6
NC5
GROUND
INPUT3
SPI_SCK_16P

<Variant Name>

PEGATRON Title : 051 AST2500 SPI/UA

PEGATRON PROPRIETARY AND CONFIDENTIAL

PEGATRON CORPORATION Engineer: Ryan2_Wang

Size	Project Name	Rev
A3	CLCL-N	1.00

Date: Tuesday, November 27, 2018 Sheet 51 of 110

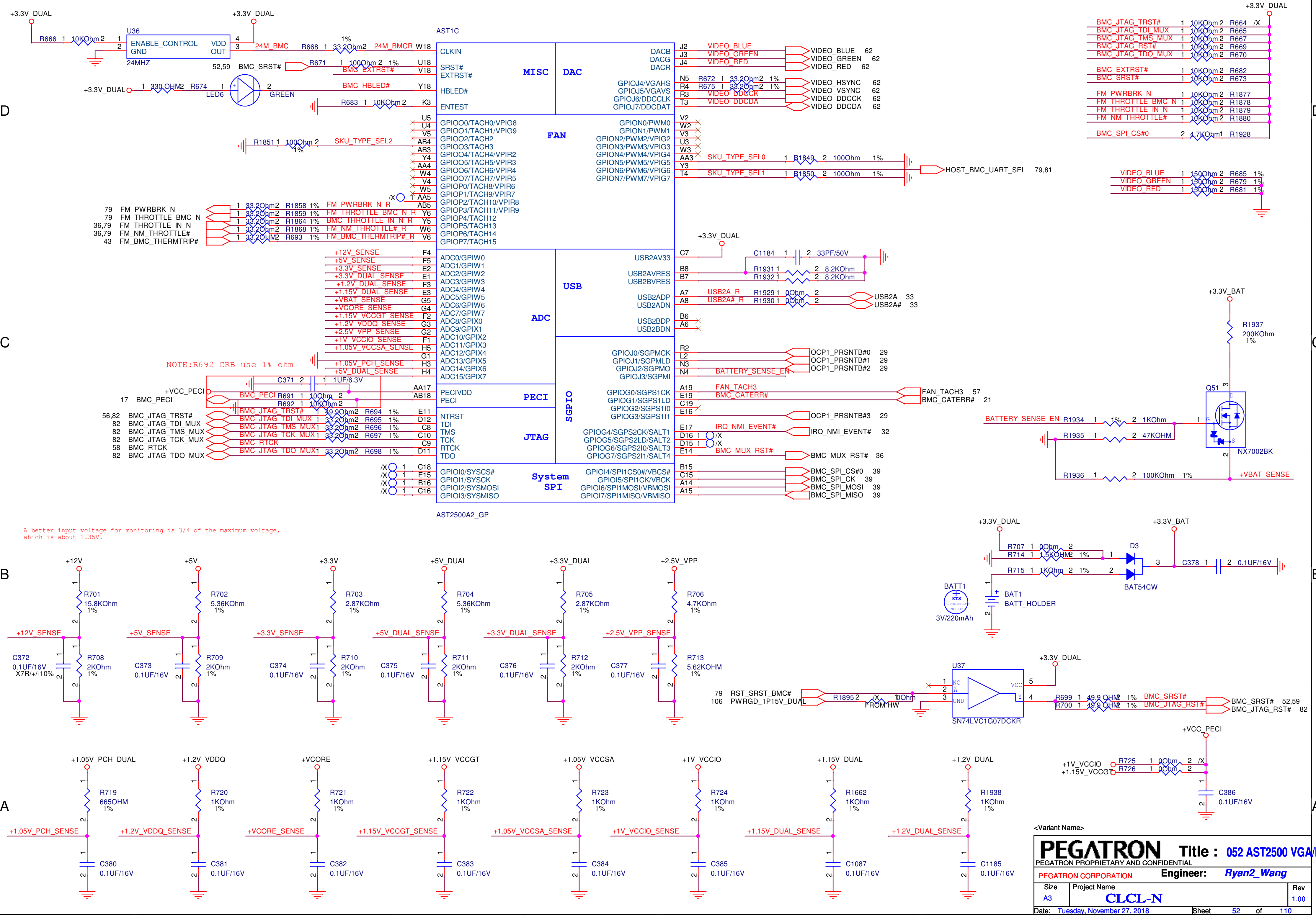

5
4
3
2
1
D
C
B
A
+3.3V_DUAL
R666 1 10KOhm 2
U36
ENABLE_CONTROL
GND
VDD
OUT
24MHZ
24M_BMC
R668 1 33.2Ohm 2 1%
24M_BMCR
W18
AST1C
CLKIN
MISC
SRST#
EXTRST#
BMC_SRST#
R671 1 100Ohm 2 1%
U18
V18
BMC_EXTRST#
BMC_HBLED#
Y18
HBLED#
+3.3V_DUAL
330 OHM
R674
LED6
GREEN
R683 1 10KOhm 2
K3
ENTEST
DAC
DACB
DACG
DACR
J2
J3
J4
VIDEO_BLUE
VIDEO_GREEN
VIDEO_RED
VIDEO_BLUE 62
VIDEO_GREEN 62
VIDEO_RED 62
GPIOJ4/VGAHS
GPIOJ5/VGAVS
GPIOJ6/DDCCLK
GPIOJ7/DDCDAT
N5
R4
R3
T3
R672 1 33.2Ohm 2 1%
R675 1 33.2Ohm 2 1%
VIDEO_DDCCK
VIDEO_DDCDA
VIDEO_HSYNC 62
VIDEO_VSYNC 62
VIDEO_DDCCK 62
VIDEO_DDCDA 62
FAN
GPIOO0/TACH0/VPIG8
GPIOO1/TACH1/VPIG9
GPIOO2/TACH2
GPIOO3/TACH3
GPIOO4/TACH4/VPIR2
GPIOO5/TACH5/VPIR3
GPIOO6/TACH6/VPIR4
GPIOO7/TACH7/VPIR5
GPIOP0/TACH8/VPIR6
GPIOP1/TACH9/VPIR7
GPIOP2/TACH10/VPIR8
GPIOP3/TACH11/VPIR9
GPIOP4/TACH12
GPIOP5/TACH13
GPIOP6/TACH14
GPIOP7/TACH15
U5
U4
V5
AB4
AB3
Y4
AA4
W4
V4
W5
AA5
AB5
Y6
Y5
W6
V6
R1851 1 100Ohm 2 1%
SKU_TYPE_SEL2
GPION0/PWM0
GPION1/PWM1
GPION2/PWM2/VPIG2
GPION3/PWM3/VPIG3
GPION4/PWM4/VPIG4
GPION5/PWM5/VPIG5
GPION6/PWM6/VPIG6
GPION7/PWM7/VPIG7
V2
W2
V3
U3
W3
AA3
Y3
T4
SKU_TYPE_SEL0
SKU_TYPE_SEL1
R1849 1 2 100Ohm 1%
R1850 1 2 100Ohm 1%
HOST_BMC_UART_SEL 79,81
79 FM_PWRBRK_N
79 FM_THROTTLE_BMC_N
36,79 FM_THROTTLE_IN_N
36,79 FM_NM_THROTTLE#
43 FM_BMC_THERMTRIP#
33.2Ohm 2 R1858 1%
33.2Ohm 2 R1859 1%
33.2Ohm 2 R1864 1%
33.2Ohm 2 R1868 1%
33.2OHM 2 R693 1%
FM_PWRBRK_N_R
FM_THROTTLE_BMC_N_R
BMC_THROTTLE_IN_N_R
FM_NM_THROTTLE#_R
FM_BMC_THERMTRIP#_R
/X
+12V_SENSE
+5V_SENSE
+3.3V_SENSE
+3.3V_DUAL_SENSE
+1.2V_DUAL_SENSE
+1.15V_DUAL_SENSE
+VBAT_SENSE
+VCORE_SENSE
+1.15V_VCCGT_SENSE
+1.2V_VDDQ_SENSE
+2.5V_VPP_SENSE
+1V_VCCIO_SENSE
+1.05V_VCCSA_SENSE
+1.05V_PCH_SENSE
+5V_DUAL_SENSE
F4
F5
E2
E1
F3
E3
G5
G4
F2
G3
G2
F1
H5
G1
H3
H4
ADC
ADC0/GPIW0
ADC1/GPIW1
ADC2/GPIW2
ADC3/GPIW3
ADC4/GPIW4
ADC5/GPIW5
ADC6/GPIW6
ADC7/GPIW7
ADC8/GPIX0
ADC9/GPIX1
ADC10/GPIX2
ADC11/GPIX3
ADC12/GPIX4
ADC13/GPIX5
ADC14/GPIX6
ADC15/GPIX7
USB
USB2AV33
USB2AVRES
USB2BVRES
USB2ADP
USB2ADN
USB2BDP
USB2BDN
C7
B8
B7
A7
A8
B6
A6
+3.3V_DUAL
C1184 1 2 33PF/50V
R1931 1 2 8.2KOhm
R1932 1 2 8.2KOhm
USB2A_R
USB2A#_R
R1929 1 0Ohm 2
R1930 1 0Ohm 2
USB2A 33
USB2A# 33
SGPIO
GPIOJ0/SGPMCK
GPIOJ1/SGPMLD
GPIOJ2/SGPMO
GPIOJ3/SGPMI
R2
L2
N3
N4
OCP1_PRSNTB#0 29
OCP1_PRSNTB#1 29
OCP1_PRSNTB#2 29
BATTERY_SENSE_EN
NOTE:R692 CRB use 1% ohm
+VCC_PECI
17 BMC_PECI
C371 2 1 1UF/6.3V
BMC_PECI R691 1 10Ohm 2
R692 1 10KOhm 2
AA17
AB18
PECIVDD
PECI
56,82 BMC_JTAG_TRST#
82 BMC_JTAG_TDI_MUX
82 BMC_JTAG_TMS_MUX
82 BMC_JTAG_TCK_MUX
58 BMC_RTCK
82 BMC_JTAG_TDO_MUX
49.9Ohm 2 R694 1%
33.2Ohm 2 R695 1%
33.2Ohm 2 R696 1%
33.2Ohm 2 R697 1%
33.2Ohm 2 R698 1%
E11
D12
C8
C10
C9
D11
NTRST
TDI
TMS
TCK
RTCK
TDO
JTAG
GPIOG0/SGPS1CK
GPIOG1/SGPS1LD
GPIOG2/SGPS1I0
GPIOG3/SGPS1I1
A19
E19
C19
E16
FAN_TACH3
BMC_CATERR#
FAN_TACH3 57
BMC_CATERR# 21
OCP1_PRSNTB#3 29
GPIOG4/SGPS2CK/SALT1
GPIOG5/SGPS2LD/SALT2
GPIOG6/SGPS2I0/SALT3
GPIOG7/SGPS2I1/SALT4
E17
D16
D15
E14
IRQ_NMI_EVENT#
IRQ_NMI_EVENT# 32
BMC_MUX_RST#
BMC_MUX_RST# 36
GPIOI0/SYSCS#
GPIOI1/SYSCK
GPIOI2/SYSMOSI
GPIOI3/SYSMISO
C18
E15
B16
C16
System SPI
GPIOI4/SPI1CS0#/VBCS#
GPIOI5/SPI1CK/VBCK
GPIOI6/SPI1MOSI/VBMOSI
GPIOI7/SPI1MISO/VBMISO
B15
C15
A14
A15
BMC_SPI_CS#0 39
BMC_SPI_CK 39
BMC_SPI_MOSI 39
BMC_SPI_MISO 39
AST2500A2_GP
+3.3V_DUAL
BMC_JTAG_TRST# 1 10KOhm 2 R664 /X
BMC_JTAG_TDI_MUX 1 10KOhm 2 R665
BMC_JTAG_TMS_MUX 1 10KOhm 2 R667
BMC_JTAG_RST# 1 10KOhm 2 R669
BMC_JTAG_TDO_MUX 1 10KOhm 2 R670
BMC_EXTRST# 1 10KOhm 2 R682
BMC_SRST# 1 10KOhm 2 R673
FM_PWRBRK_N 1 10KOhm 2 R1877
FM_THROTTLE_BMC_N 1 10KOhm 2 R1878
FM_THROTTLE_IN_N 1 10KOhm 2 R1879
FM_NM_THROTTLE# 1 10KOhm 2 R1880
BMC_SPI_CS#0 2 4.7KOhm 1 R1928
VIDEO_BLUE 1 150Ohm 2 R685 1%
VIDEO_GREEN 1 150Ohm 2 R679 1%
VIDEO_RED 1 150Ohm 2 R681 1%
+3.3V_BAT
R1937
200KOhm
1%
Q51
NX7002BK
BATTERY_SENSE_EN R1934 1 1% 2 1KOhm
R1935 1 2 47KOHM
R1936 1 2 100KOhm 1%
+VBAT_SENSE
A better input voltage for monitoring is 3/4 of the maximum voltage,
which is about 1.35V.
+12V
R701
15.8KOhm
1%
+12V_SENSE
C372
0.1UF/16V
X7R/+/-10%
R708
2KOhm
1%
+5V
R702
5.36KOhm
1%
+5V_SENSE
C373
0.1UF/16V
R709
2KOhm
1%
+3.3V
R703
2.87KOhm
1%
+3.3V_SENSE
C374
0.1UF/16V
R710
2KOhm
1%
+5V_DUAL
R704
5.36KOhm
1%
+5V_DUAL_SENSE
C375
0.1UF/16V
R711
2KOhm
1%
+3.3V_DUAL
R705
2.87KOhm
1%
+3.3V_DUAL_SENSE
C376
0.1UF/16V
R712
2KOhm
1%
+2.5V_VPP
R706
4.7KOhm
1%
+2.5V_VPP_SENSE
C377
0.1UF/16V
R713
5.62KOHM
1%
+3.3V_DUAL
+3.3V_BAT
R707 1 0Ohm 2
R714 1 1.5KOHM 2 1%
R715 1 1KOhm 2 1%
D3
BAT54CW
C378 1 2 0.1UF/16V
BATT1
3V/220mAh
BAT1
BATT_HOLDER
U37
NC
A
GND
VCC
Y
SN74LVC1G07DCKR
+3.3V_DUAL
79 RST_SRST_BMC#
106 PWRGD_1P15V_DUAL
R1895 2 /X 1 0Ohm
FROM HW
R699 1 49.9 OHM 2 1%
R700 1 49.9 OHM 2 1%
BMC_SRST#
BMC_JTAG_RST#
BMC_SRST# 52,59
BMC_JTAG_RST# 82
+VCC_PECI
+1V_VCCIO
+1.15V_VCCGT
R725 1 0Ohm 2 /X
R726 1 0Ohm 2
C386
0.1UF/16V
+1.05V_PCH_DUAL
R719
665OHM
1%
+1.05V_PCH_SENSE
C380
0.1UF/16V
+1.2V_VDDQ
R720
1KOhm
1%
+1.2V_VDDQ_SENSE
C381
0.1UF/16V
+VCORE
R721
1KOhm
1%
+VCORE_SENSE
C382
0.1UF/16V
+1.15V_VCCGT
R722
1KOhm
1%
+1.15V_VCCGT_SENSE
C383
0.1UF/16V
+1.05V_VCCSA
R723
1KOhm
1%
+1.05V_VCCSA_SENSE
C384
0.1UF/16V
+1V_VCCIO
R724
1KOhm
1%
+1V_VCCIO_SENSE
C385
0.1UF/16V
+1.15V_DUAL
R1662
1KOhm
1%
+1.15V_DUAL_SENSE
C1087
0.1UF/16V
+1.2V_DUAL
R1938
1KOhm
1%
+1.2V_DUAL_SENSE
C1185
0.1UF/16V

<Variant Name>

PEGATRON
PEGATRON PROPRIETARY AND CONFIDENTIAL
PEGATRON CORPORATION

Title : 052 AST2500 VGA/FA

Engineer: Ryan2_Wang

Size	Project Name	Rev
A3	CLCL-N	1.00

Date: Tuesday, November 27, 2018 Sheet 52 of 110

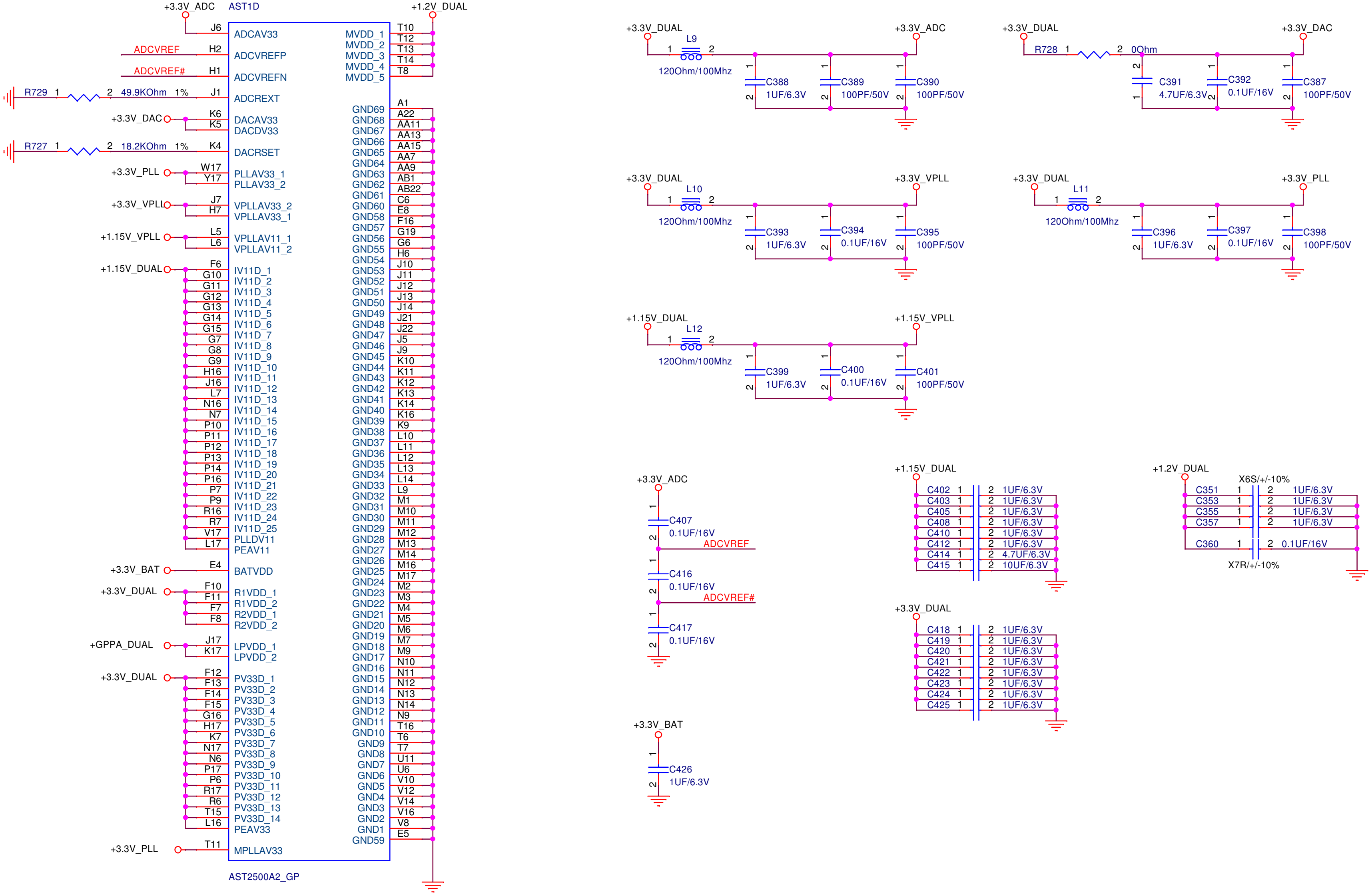
AST1D
AST2500A2_GP
+3.3V_ADC
+1.2V_DUAL
J6 ADCAV33
H2 ADCVREFP
H1 ADCVREFN
J1 ADCREXT
ADCVREF
ADCVREF#
R729 1 2 49.9KOhm 1%
R727 1 2 18.2KOhm 1%
+3.3V_DAC
K6 DACAV33
K5 DACDV33
K4 DACRSET
+3.3V_PLL
W17 PLLAV33_1
Y17 PLLAV33_2
+3.3V_VPLL
J7 VPLLAV33_2
H7 VPLLAV33_1
+1.15V_VPLL
L5 VPLLAV11_1
L6 VPLLAV11_2
+1.15V_DUAL
F6 IV11D_1
G10 IV11D_2
G11 IV11D_3
G12 IV11D_4
G13 IV11D_5
G14 IV11D_6
G15 IV11D_7
G7 IV11D_8
G8 IV11D_9
G9 IV11D_10
H16 IV11D_11
J16 IV11D_12
L7 IV11D_13
N16 IV11D_14
N7 IV11D_15
P10 IV11D_16
P11 IV11D_17
P12 IV11D_18
P13 IV11D_19
P14 IV11D_20
P16 IV11D_21
P7 IV11D_22
P9 IV11D_23
R16 IV11D_24
R7 IV11D_25
V17 PLLDV11
L17 PEAV11
+3.3V_BAT
E4 BATVDD
+3.3V_DUAL
F10 R1VDD_1
F11 R1VDD_2
F7 R2VDD_1
F8 R2VDD_2
+GPPA_DUAL
J17 LPVDD_1
K17 LPVDD_2
+3.3V_DUAL
F12 PV33D_1
F13 PV33D_2
F14 PV33D_3
F15 PV33D_4
G16 PV33D_5
H17 PV33D_6
K7 PV33D_7
N17 PV33D_8
N6 PV33D_9
P17 PV33D_10
P6 PV33D_11
R17 PV33D_12
R6 PV33D_13
T15 PV33D_14
L16 PEAV33
+3.3V_PLL
T11 MPLLAV33
MVDD_1 T10
MVDD_2 T12
MVDD_3 T13
MVDD_4 T14
MVDD_5 T8
A1
GND69 A22
GND68 AA11
GND67 AA13
GND66 AA15
GND65 AA7
GND64 AA9
GND63 AB1
GND62 AB22
GND61 C6
GND60 E8
GND58 F16
GND57 G19
GND56 G6
GND55 H6
GND54 J10
GND53 J11
GND52 J12
GND51 J13
GND50 J14
GND49 J21
GND48 J22
GND47 J5
GND46 J9
GND45 K10
GND44 K11
GND43 K12
GND42 K13
GND41 K14
GND40 K16
GND39 K9
GND38 L10
GND37 L11
GND36 L12
GND35 L13
GND34 L14
GND33 L9
GND32 M1
GND31 M10
GND30 M11
GND29 M12
GND28 M13
GND27 M14
GND26 M16
GND25 M17
GND24 M2
GND23 M3
GND22 M4
GND21 M5
GND20 M6
GND19 M7
GND18 M9
GND17 N10
GND16 N11
GND15 N12
GND14 N13
GND13 N14
GND12 N9
GND11 T16
GND10 T6
GND9 T7
GND8 U11
GND7 U6
GND6 V10
GND5 V12
GND4 V14
GND3 V16
GND2 V8
GND1 E5
GND59
+3.3V_DUAL
L9
1 2
120Ohm/100Mhz
+3.3V_ADC
C388 1UF/6.3V
C389 100PF/50V
C390 100PF/50V
+3.3V_DUAL
R728 1 2 0Ohm
+3.3V_DAC
C391 4.7UF/6.3V
C392 0.1UF/16V
C387 100PF/50V
+3.3V_DUAL
L10
120Ohm/100Mhz
+3.3V_VPLL
C393 1UF/6.3V
C394 0.1UF/16V
C395 100PF/50V
+3.3V_DUAL
L11
120Ohm/100Mhz
+3.3V_PLL
C396 1UF/6.3V
C397 0.1UF/16V
C398 100PF/50V
+1.15V_DUAL
L12
120Ohm/100Mhz
+1.15V_VPLL
C399 1UF/6.3V
C400 0.1UF/16V
C401 100PF/50V
+3.3V_ADC
C407 0.1UF/16V
ADCVREF
C416 0.1UF/16V
ADCVREF#
C417 0.1UF/16V
+3.3V_BAT
C426 1UF/6.3V
+1.15V_DUAL
C402 1 2 1UF/6.3V
C403 1 2 1UF/6.3V
C405 1 2 1UF/6.3V
C408 1 2 1UF/6.3V
C410 1 2 1UF/6.3V
C412 1 2 1UF/6.3V
C414 1 2 4.7UF/6.3V
C415 1 2 10UF/6.3V
+3.3V_DUAL
C418 1 2 1UF/6.3V
C419 1 2 1UF/6.3V
C420 1 2 1UF/6.3V
C421 1 2 1UF/6.3V
C422 1 2 1UF/6.3V
C423 1 2 1UF/6.3V
C424 1 2 1UF/6.3V
C425 1 2 1UF/6.3V
+1.2V_DUAL
X6S/+/-10%
C351 1 2 1UF/6.3V
C353 1 2 1UF/6.3V
C355 1 2 1UF/6.3V
C357 1 2 1UF/6.3V
C360 1 2 0.1UF/16V
X7R/+/-10%

<Variant Name>

PEGATRON
PEGATRON PROPRIETARY AND CONFIDENTIAL
Title : 053 AST2500 POWE

PEGATRON CORPORATION
Engineer: *Ryan2_Wang*

Size	Project Name	Rev
A3	CLCL-N	1.00

Date: Tuesday, November 27, 2018 Sheet 53 of 110

<Variant Name>

PEGATRON PROPRIETARY AND CONFIDENTIAL

Title : 054 PAGE

PEGATRON CORPORATION

Engineer: *Ryan2_Wang*

Size	Project Name	Rev
A3	CLCL-N	1.00

Date: Tuesday, November 27, 2018 Sheet 54 of 110

<Variant Name>

PEGATRON
PEGATRON PROPRIETARY AND CONFIDENTIAL

Title : 055 AST2500 PHY RT

PEGATRON CORPORATION

Engineer: *Ryan2_Wang*

Size	Project Name	Rev
A3	**CLCL-N**	1.00

Date: Tuesday, November 27, 2018 Sheet 55 of 110

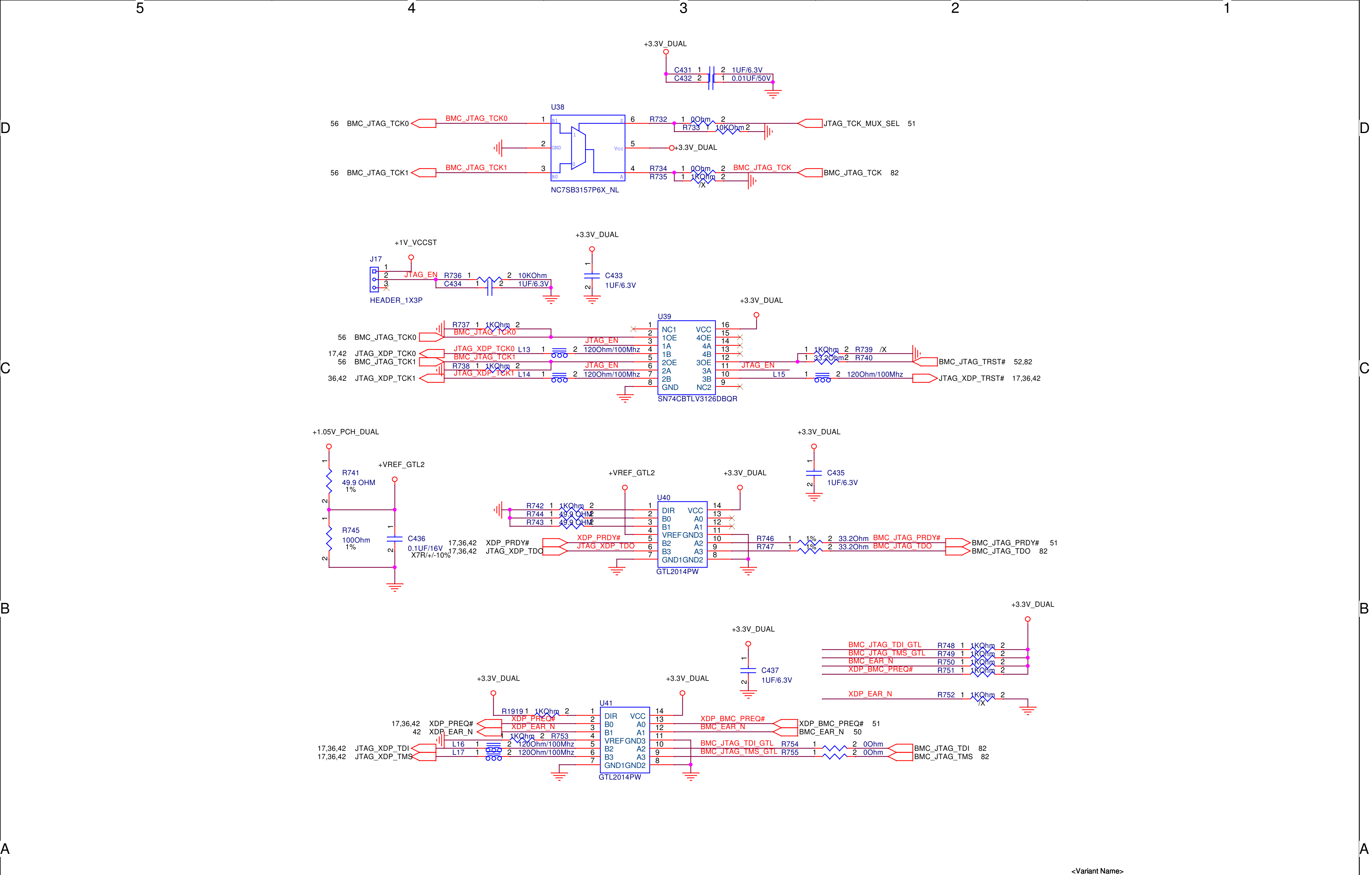
5
4
3
2
1
D
C
B
A
+3.3V_DUAL
C431 1 2 1UF/6.3V
C432 2 1 0.01UF/50V
U38
56 BMC_JTAG_TCK0
BMC_JTAG_TCK0
1
B1
S
6
R732 1 0Ohm 2
R733 1 10KOhm 2
JTAG_TCK_MUX_SEL 51
2
GND
Vcc
5
+3.3V_DUAL
56 BMC_JTAG_TCK1
BMC_JTAG_TCK1
3
B0
A
4
R734 1 0Ohm 2
R735 1 1KOhm 2
/X
BMC_JTAG_TCK
BMC_JTAG_TCK 82
NC7SB3157P6X_NL
+1V_VCCST
+3.3V_DUAL
J17
1
2
3
JTAG_EN
R736 1 2 10KOhm
C434 1 2 1UF/6.3V
HEADER_1X3P
C433
1UF/6.3V
+3.3V_DUAL
U39
R737 1 1KOhm 2
BMC_JTAG_TCK0
56 BMC_JTAG_TCK0
17,42 JTAG_XDP_TCK0
JTAG_XDP_TCK0
L13 1 2 120Ohm/100Mhz
56 BMC_JTAG_TCK1
BMC_JTAG_TCK1
R738 1 1KOhm 2
JTAG_XDP_TCK1
L14 1 2 120Ohm/100Mhz
36,42 JTAG_XDP_TCK1
JTAG_EN
JTAG_EN
1 NC1
2 1OE
3 1A
4 1B
5 2OE
6 2A
7 2B
8 GND
VCC 16
4OE 15
4A 14
4B 13
3OE 12
3A 11
3B 10
NC2 9
JTAG_EN
1 1KOhm 2 R739 /X
1 33.2Ohm 2 R740
BMC_JTAG_TRST# 52,82
L15 1 2 120Ohm/100Mhz
JTAG_XDP_TRST# 17,36,42
SN74CBTLV3126DBQR
+1.05V_PCH_DUAL
R741
49.9 OHM
1%
+VREF_GTL2
R745
100Ohm
1%
C436
0.1UF/16V
X7R/+/-10%
+VREF_GTL2
+3.3V_DUAL
+3.3V_DUAL
C435
1UF/6.3V
U40
R742 1 1KOhm 2
R744 1 49.9 OHM 2
R743 1 49.9 OHM 2
1 DIR
2 B0
3 B1
4 VREF
5 B2
6 B3
7 GND1
VCC 14
A0 13
A1 12
GND3 11
A2 10
A3 9
GND2 8
17,36,42 XDP_PRDY#
17,36,42 JTAG_XDP_TDO
XDP_PRDY#
JTAG_XDP_TDO
R746 1 1% 2 33.2Ohm
R747 1 1% 2 33.2Ohm
BMC_JTAG_PRDY#
BMC_JTAG_TDO
BMC_JTAG_PRDY# 51
BMC_JTAG_TDO 82
GTL2014PW
+3.3V_DUAL
+3.3V_DUAL
C437
1UF/6.3V
BMC_JTAG_TDI_GTL
BMC_JTAG_TMS_GTL
BMC_EAR_N
XDP_BMC_PREQ#
R748 1 1KOhm 2
R749 1 1KOhm 2
R750 1 1KOhm 2
R751 1 1KOhm 2
XDP_EAR_N
R752 1 1KOhm 2
/X
+3.3V_DUAL
+3.3V_DUAL
U41
R1919 1 1KOhm 2
XDP_PREQ#
XDP_EAR_N
17,36,42 XDP_PREQ#
42 XDP_EAR_N
1KOhm 2 R753
L16 1 2 120Ohm/100Mhz
L17 1 2 120Ohm/100Mhz
17,36,42 JTAG_XDP_TDI
17,36,42 JTAG_XDP_TMS
1 DIR
2 B0
3 B1
4 VREF
5 B2
6 B3
7 GND1
VCC 14
A0 13
A1 12
GND3 11
A2 10
A3 9
GND2 8
GTL2014PW
XDP_BMC_PREQ#
BMC_EAR_N
XDP_BMC_PREQ# 51
BMC_EAR_N 50
BMC_JTAG_TDI_GTL
BMC_JTAG_TMS_GTL
R754 1 2 0Ohm
R755 1 2 0Ohm
BMC_JTAG_TDI 82
BMC_JTAG_TMS 82

<Variant Name>

PEGATRON Title : 056 AST2500 JTAG

PEGATRON PROPRIETARY AND CONFIDENTIAL

PEGATRON CORPORATION Engineer: *Ryan2_Wang*

Size	Project Name	Rev
A3	CLCL-N	1.00

Date: Tuesday, November 27, 2018 Sheet 56 of 110

FAN

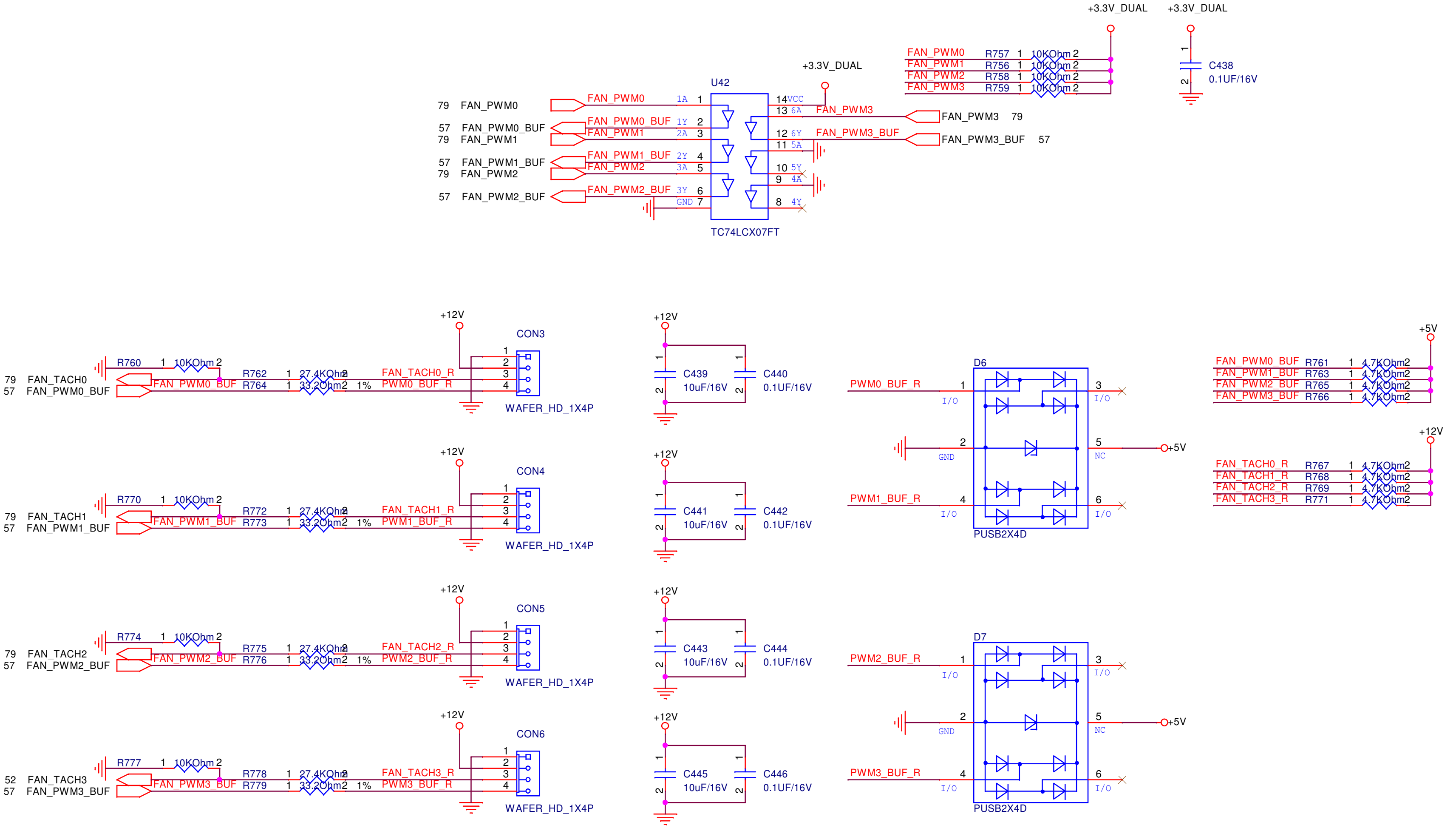
+3.3V_DUAL
+3.3V_DUAL
+3.3V_DUAL
FAN_PWM0 R757 1 10KOhm 2
FAN_PWM1 R756 1 10KOhm 2
FAN_PWM2 R758 1 10KOhm 2
FAN_PWM3 R759 1 10KOhm 2
C438
0.1UF/16V
U42
TC74LCX07FT
79 FAN_PWM0
57 FAN_PWM0_BUF
79 FAN_PWM1
57 FAN_PWM1_BUF
79 FAN_PWM2
57 FAN_PWM2_BUF
FAN_PWM0 1A 1
FAN_PWM0_BUF 1Y 2
FAN_PWM1 2A 3
FAN_PWM1_BUF 2Y 4
FAN_PWM2 3A 5
FAN_PWM2_BUF 3Y 6
GND 7
14 VCC
13 6A FAN_PWM3
12 6Y FAN_PWM3_BUF
11 5A
10 5Y
9 4A
8 4Y
FAN_PWM3 79
FAN_PWM3_BUF 57
+12V
CON3
79 FAN_TACH0
57 FAN_PWM0_BUF
R760 1 10KOhm 2
FAN_PWM0_BUF
R762 1 27.4KOhm 2
R764 1 33.2Ohm 2 1%
FAN_TACH0_R
PWM0_BUF_R
WAFER_HD_1X4P
+12V
CON4
79 FAN_TACH1
57 FAN_PWM1_BUF
R770 1 10KOhm 2
FAN_PWM1_BUF
R772 1 27.4KOhm 2
R773 1 33.2Ohm 2 1%
FAN_TACH1_R
PWM1_BUF_R
WAFER_HD_1X4P
+12V
CON5
79 FAN_TACH2
57 FAN_PWM2_BUF
R774 1 10KOhm 2
FAN_PWM2_BUF
R775 1 27.4KOhm 2
R776 1 33.2Ohm 2 1%
FAN_TACH2_R
PWM2_BUF_R
WAFER_HD_1X4P
+12V
CON6
52 FAN_TACH3
57 FAN_PWM3_BUF
R777 1 10KOhm 2
FAN_PWM3_BUF
R778 1 27.4KOhm 2
R779 1 33.2Ohm 2 1%
FAN_TACH3_R
PWM3_BUF_R
WAFER_HD_1X4P
1
2
3
4
+12V
C439 10uF/16V
C440 0.1UF/16V
+12V
C441 10uF/16V
C442 0.1UF/16V
+12V
C443 10uF/16V
C444 0.1UF/16V
+12V
C445 10uF/16V
C446 0.1UF/16V
D6
PWM0_BUF_R 1 I/O
2 GND
PWM1_BUF_R 4 I/O
3 I/O
5 NC +5V
6 I/O
PUSB2X4D
D7
PWM2_BUF_R 1 I/O
2 GND
PWM3_BUF_R 4 I/O
3 I/O
5 NC +5V
6 I/O
PUSB2X4D
+5V
FAN_PWM0_BUF R761 1 4.7KOhm 2
FAN_PWM1_BUF R763 1 4.7KOhm 2
FAN_PWM2_BUF R765 1 4.7KOhm 2
FAN_PWM3_BUF R766 1 4.7KOhm 2
+12V
FAN_TACH0_R R767 1 4.7KOhm 2
FAN_TACH1_R R768 1 4.7KOhm 2
FAN_TACH2_R R769 1 4.7KOhm 2
FAN_TACH3_R R771 1 4.7KOhm 2

<Variant Name>

PEGATRON **Title : 057 AST2500 FAN**
PEGATRON PROPRIETARY AND CONFIDENTIAL
PEGATRON CORPORATION **Engineer:** *Ryan2_Wang*

Size	Project Name	Rev
A3	CLCL-N	1.00

Date: Tuesday, November 27, 2018 Sheet 57 of 110

Enable SPI Flash Strap Auto Fetch Mode

0: DISABLE
1: ENABLE(Default)

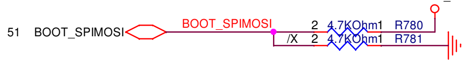
+3.3V_DUAL
51 BOOT_SPIMOSI
BOOT_SPIMOSI
2 4.7KOhm1 R780
/X 2 4.7KOhm1 R781

Enable GPIO Strap Mode

0: DISABLE
1: ENABLE(Default)

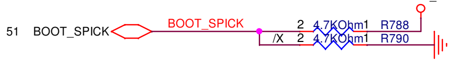
+3.3V_DUAL
51 BOOT_SPICK
BOOT_SPICK
2 4.7KOhm1 R788
/X 2 4.7KOhm1 R790

Select UART Debug Port

0: Select UART1 as BMC console port
1: Select UART5 as BMC console port(Default)

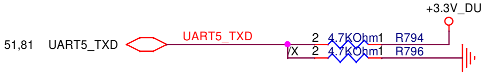
+3.3V_DUAL
51,81 UART5_TXD
UART5_TXD
2 4.7KOhm1 R794
X 2 4.7KOhm1 R796

ENABLE fast reset mode for ARM ICE debugger

0: Long reset mode(Default)
1: Fast reset mode

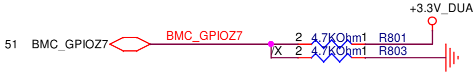
+3.3V_DUAL
51 BMC_GPIOZ7
BMC_GPIOZ7
2 4.7KOhm1 R801
X 2 4.7KOhm1 R803

ENABLE ESPI Flash MODE

0: ESPI respond with no flash attached (Default)
1: ESPI respond with flash attached

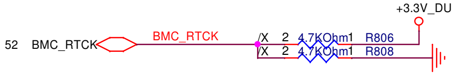
+3.3V_DUAL
52 BMC_RTCK
BMC_RTCK
/X 2 4.7KOhm1 R806
X 2 4.7KOhm1 R808

Enable ESPI Mode

0: LPC mode
1: eSPI mode (Default)

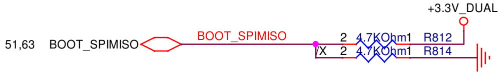
+3.3V_DUAL
51,63 BOOT_SPIMISO
BOOT_SPIMISO
2 4.7KOhm1 R812
X 2 4.7KOhm1 R814

Select DDR4 SDRAM

0: DDR3 SRAM
1: DDR4 SRAM(Default)

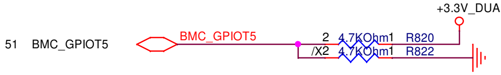
+3.3V_DUAL
51 BMC_GPIOT5
BMC_GPIOT5
2 4.7KOhm1 R820
/X2 4.7KOhm1 R822

Select Reference clock input mode

0: CLKIN is 24MHz and USBCKI not used(Default)
1: CLKIN is 25MHz and USBCKI=24/48MHz

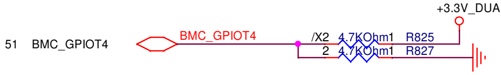
+3.3V_DUAL
51 BMC_GPIOT4
BMC_GPIOT4
/X2 4.7KOhm1 R825
2 4.7KOhm1 R827

Enable GPIOE pass-throug mode

0: Disable pass through
1: Enable pass through(Default)

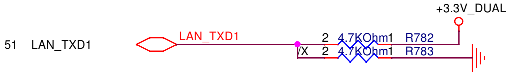
+3.3V_DUAL
51 LAN_TXD1
LAN_TXD1
2 4.7KOhm1 R782
/X 2 4.7KOhm1 R783

Enable GPIOD pass-throug mode

0: Disable pass through(Default)
1: Enable pass through

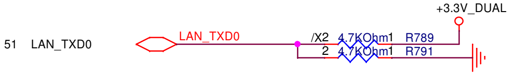
+3.3V_DUAL
51 LAN_TXD0
LAN_TXD0
/X2 4.7KOhm1 R789
2 4.7KOhm1 R791

Disable LPC to decode SuperIO address

0: ENABLE address decoding(Default)
1: DISABLE address decoding

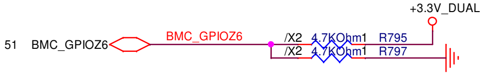
+3.3V_DUAL
51 BMC_GPIOZ6
BMC_GPIOZ6
/X2 4.7KOhm1 R795
/X2 4.7KOhm1 R797

Enable ACPI function

0: Disable ACPI
1: Enable ACPI(Default)

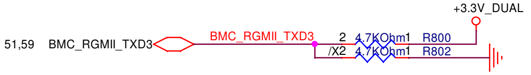
+3.3V_DUAL
51,59 BMC_RGMII_TXD3
BMC_RGMII_TXD3
2 4.7KOhm1 R800
/X2 4.7KOhm1 R802

Select USBCKI input frequence

0: 24MHz(Default)
1: 48MHz

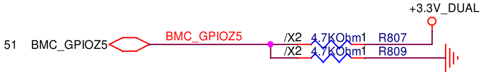
+3.3V_DUAL
51 BMC_GPIOZ5
BMC_GPIOZ5
/X2 4.7KOhm1 R807
/X2 4.7KOhm1 R809

Enable BMC 2nd boot watchdog timer

0: DISABLE
1: ENABLE BMC 2nd boot watchdog timer star counting at
power up(Default)

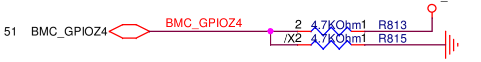
+3.3V_DUAL
51 BMC_GPIOZ4
BMC_GPIOZ4
2 4.7KOhm1 R813
/X2 4.7KOhm1 R815

SuperIO configuration address selection

0: Decode 0x2E
1: Decode 0x4E(Default)

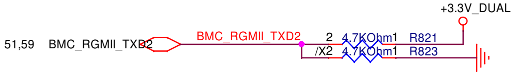
+3.3V_DUAL
51,59 BMC_RGMII_TXD2
BMC_RGMII_TXD2
2 4.7KOhm1 R821
/X2 4.7KOhm1 R823

VGA Class Code selection

0: Select the Class Code for video device
1: Select the Class Code for VGA device(Default)

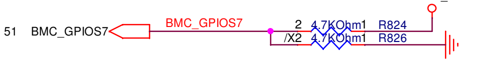
+3.3V_DUAL
51 BMC_GPIOS7
BMC_GPIOS7
2 4.7KOhm1 R824
/X2 4.7KOhm1 R826

SPI mode selection

00: Disable SPI interface
01: Enable SPI Master(Default)
10: Reserved, enable SPI Master and SPI Slave to AHB
11: Enable SPI Pass-through

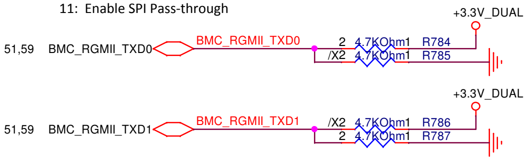
+3.3V_DUAL
51,59 BMC_RGMII_TXD0
BMC_RGMII_TXD0
2 4.7KOhm1 R784
/X2 4.7KOhm1 R785
+3.3V_DUAL
51,59 BMC_RGMII_TXD1
BMC_RGMII_TXD1
/X2 4.7KOhm1 R786
2 4.7KOhm1 R787

Define MAC#2 interface

0: RMII/NCSI(Default)
1:RGMII

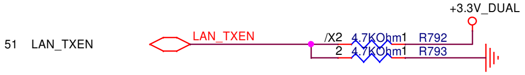
+3.3V_DUAL
51 LAN_TXEN
LAN_TXEN
/X2 4.7KOhm1 R792
2 4.7KOhm1 R793

Define MAC#1 interface

0: RMII/NCSI
1:RGMII(Default)

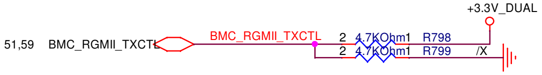
+3.3V_DUAL
51,59 BMC_RGMII_TXCTL
BMC_RGMII_TXCTL
2 4.7KOhm1 R798
2 4.7KOhm1 R799 /X

Enable VGA BIOS ROM

0: NO VGA BIOS ROM(Default)
1: ENABLE dedicated VGA BIOS ROM

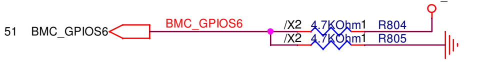
+3.3V_DUAL
51 BMC_GPIOS6
BMC_GPIOS6
/X2 4.7KOhm1 R804
/X2 4.7KOhm1 R805

VGA memory size selection

00: 8 MB VGA memory
01: 16MB VGA memory(Default)
10: 32MB VGA memory
11: 64MB VGA memory

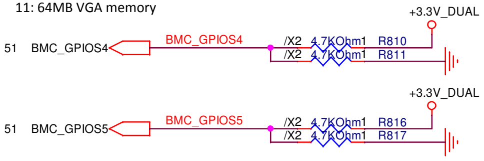
+3.3V_DUAL
51 BMC_GPIOS4
BMC_GPIOS4
/X2 4.7KOhm1 R810
/X2 4.7KOhm1 R811
+3.3V_DUAL
51 BMC_GPIOS5
BMC_GPIOS5
/X2 4.7KOhm1 R816
/X2 4.7KOhm1 R817

Disable CPU boot

0: ENABLE BOOT(Default)
1:DISABLE CPU operation

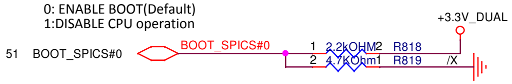
+3.3V_DUAL
51 BOOT_SPICS#0
BOOT_SPICS#0
1 2.2kOHM2 R818
2 4.7KOhm1 R819 /X

<Variant Name>

PEGATRON **Title : 058 AST2500 STRAP**
PEGATRON PROPRIETARY AND CONFIDENTIAL
PEGATRON CORPORATION **Engineer:** *Ryan2_Wang*
Size A3
Project Name CLCL-N
Rev 1.00
Date: Tuesday, November 27, 2018 Sheet 58 of 110

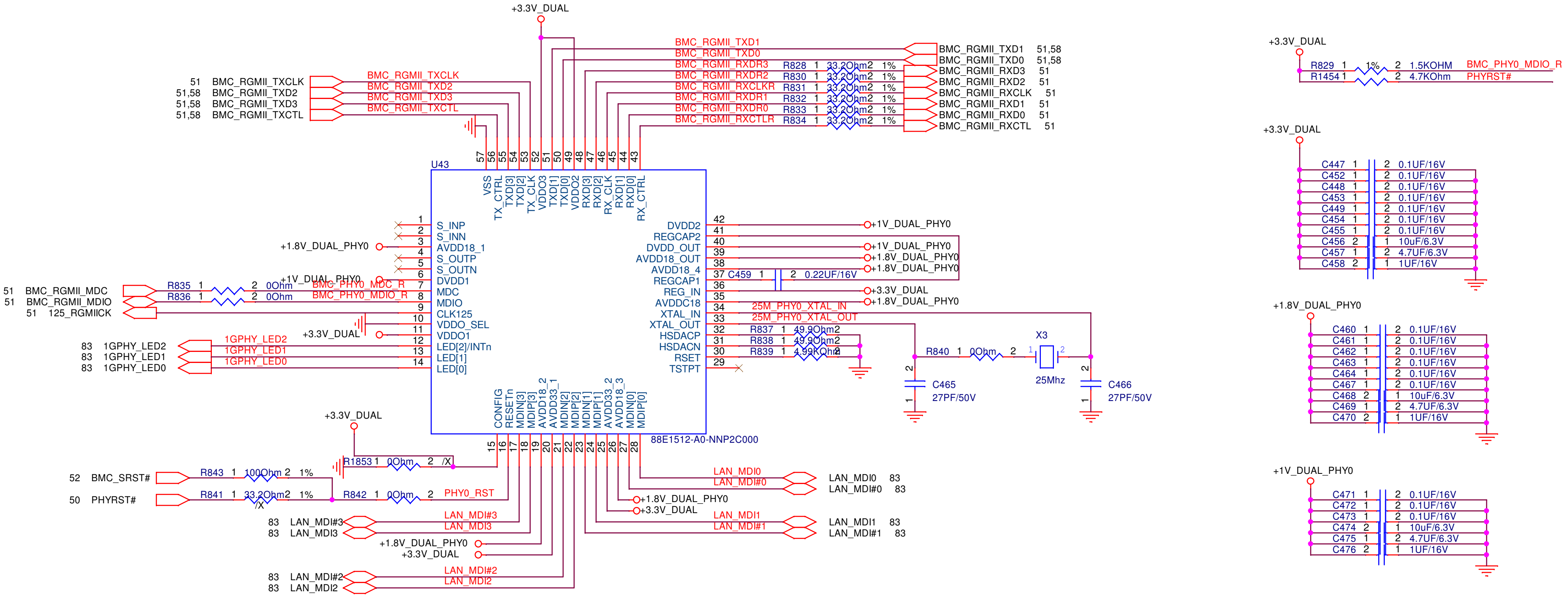
+3.3V_DUAL
U43
88E1512-A0-NNP2C000
BMC_RGMII_TXCLK
BMC_RGMII_TXD2
BMC_RGMII_TXD3
BMC_RGMII_TXCTL
BMC_RGMII_TXD1
BMC_RGMII_TXD0
BMC_RGMII_RXD3
BMC_RGMII_RXD2
BMC_RGMII_RXCLK
BMC_RGMII_RXD1
BMC_RGMII_RXD0
BMC_RGMII_RXCTL
BMC_RGMII_RXDR3
BMC_RGMII_RXDR2
BMC_RGMII_RXCLKR
BMC_RGMII_RXDR1
BMC_RGMII_RXDR0
BMC_RGMII_RXCTLR
R828 R830 R831 R832 R833 R834 33.2Ohm 1%
S_INP
S_INN
AVDD18_1
S_OUTP
S_OUTN
DVDD1
MDC
MDIO
CLK125
VDDO_SEL
VDDO1
LED[2]/INTn
LED[1]
LED[0]
DVDD2
REGCAP2
DVDD_OUT
AVDD18_OUT
AVDD18_4
REGCAP1
REG_IN
AVDDC18
XTAL_IN
XTAL_OUT
HSDACP
HSDACN
RSET
TSTPT
CONFIG
RESETn
MDIP[3]
MDIN[3]
AVDD18_2
AVDD33_1
MDIN[2]
MDIP[2]
MDIN[1]
MDIP[1]
AVDD33_2
AVDD18_3
MDIN[0]
MDIP[0]
VSS
TX_CTRL
TXD[3]
TXD[2]
TX_CLK
VDDO3
TXD[1]
TXD[0]
VDDO2
RXD[3]
RXD[2]
RX_CLK
RXD[1]
RXD[0]
RX_CTRL
+1.8V_DUAL_PHY0
+1V_DUAL_PHY0
51 BMC_RGMII_MDC
51 BMC_RGMII_MDIO
51 125_RGMIICK
R835 0Ohm
R836 0Ohm
BMC_PHY0_MDC_R
BMC_PHY0_MDIO_R
83 1GPHY_LED2
83 1GPHY_LED1
83 1GPHY_LED0
C459 0.22UF/16V
25M_PHY0_XTAL_IN
25M_PHY0_XTAL_OUT
R837 49.9Ohm
R838 49.9Ohm
R839 4.99KOhm
R840 0Ohm
X3 25Mhz
C465 27PF/50V
C466 27PF/50V
52 BMC_SRST#
50 PHYRST#
R1853 0Ohm /X
R843 100Ohm 1%
R841 33.2Ohm 1% /X
R842 0Ohm
PHY0_RST
LAN_MDI0 83
LAN_MDI#0 83
LAN_MDI1 83
LAN_MDI#1 83
83 LAN_MDI#3
83 LAN_MDI3
83 LAN_MDI#2
83 LAN_MDI2
R829 1% 1.5KOHM BMC_PHY0_MDIO_R
R1454 4.7KOhm PHYRST#
C447 C452 C448 C453 C449 C454 C455 0.1UF/16V
C456 10uF/6.3V
C457 4.7UF/6.3V
C458 1UF/16V
C460 C461 C462 C463 C464 C467 0.1UF/16V
C468 10uF/6.3V
C469 4.7UF/6.3V
C470 1UF/16V
C471 C472 C473 0.1UF/16V
C474 10uF/6.3V
C475 4.7UF/6.3V
C476 1UF/16V

<Variant Name>

PEGATRON Title : 059 AST2500 PHY0 8

PEGATRON PROPRIETARY AND CONFIDENTIAL

PEGATRON CORPORATION Engineer: *Ryan2_Wang*

Size	Project Name	Rev
A3	CLCL-N	1.00

Date: Tuesday, November 27, 2018 Sheet 59 of 110

D D

C C

B B

A A

<Variant Name>

PEGATRON

Title : 060 AST2500 PHY1 8

PEGATRON PROPRIETARY AND CONFIDENTIAL

PEGATRON CORPORATION

Engineer: *Ryan2_Wang*

Size	Project Name	Rev
A3	CLCL-N	1.00

Date: Tuesday, November 27, 2018 Sheet 60 of 110

TMPSENSOR_SMBUS

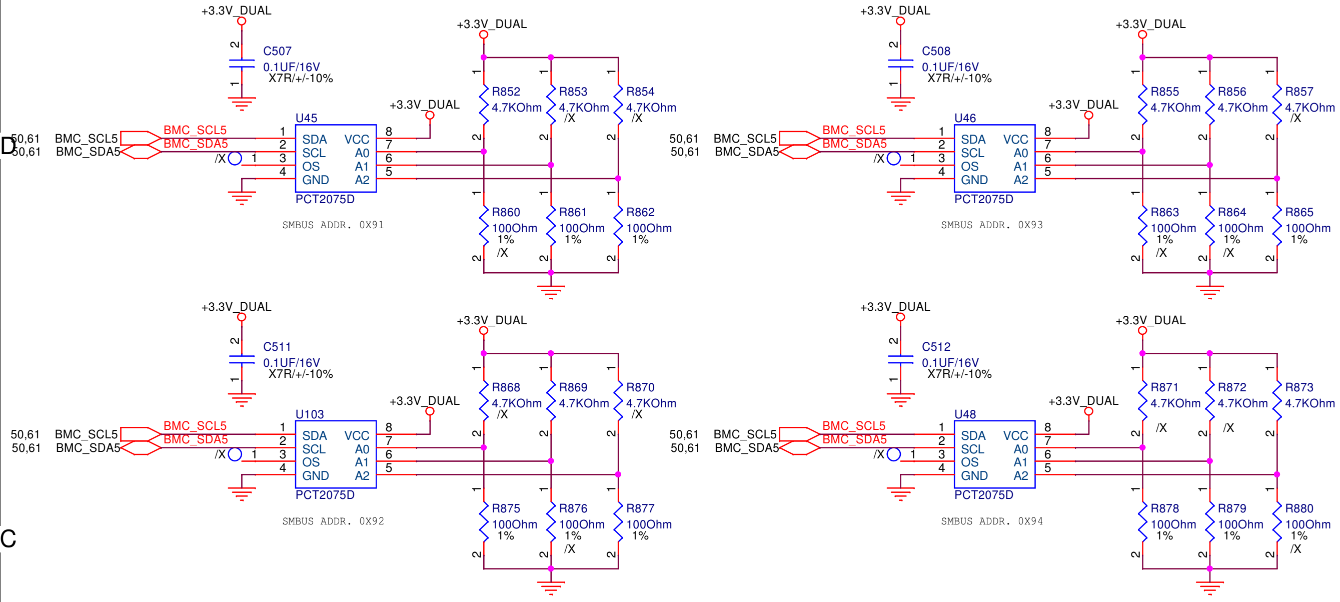

+3.3V_DUAL
C507 0.1UF/16V X7R/+/-10%
C508 0.1UF/16V X7R/+/-10%
C511 0.1UF/16V X7R/+/-10%
C512 0.1UF/16V X7R/+/-10%
50,61 BMC_SCL5
50,61 BMC_SDA5
BMC_SCL5
BMC_SDA5
U45 PCT2075D
U46 PCT2075D
U103 PCT2075D
U48 PCT2075D
SDA SCL OS GND VCC A0 A1 A2
/X
SMBUS ADDR. 0X91
SMBUS ADDR. 0X93
SMBUS ADDR. 0X92
SMBUS ADDR. 0X94
R852 4.7KOhm
R853 4.7KOhm /X
R854 4.7KOhm /X
R860 100Ohm 1% /X
R861 100Ohm 1%
R862 100Ohm 1%
R855 4.7KOhm
R856 4.7KOhm
R857 4.7KOhm /X
R863 100Ohm 1% /X
R864 100Ohm 1% /X
R865 100Ohm 1%
R868 4.7KOhm /X
R869 4.7KOhm
R870 4.7KOhm /X
R875 100Ohm 1%
R876 100Ohm 1% /X
R877 100Ohm 1%
R871 4.7KOhm /X
R872 4.7KOhm /X
R873 4.7KOhm
R878 100Ohm 1%
R879 100Ohm 1%
R880 100Ohm 1% /X

IPMB_SMBUS

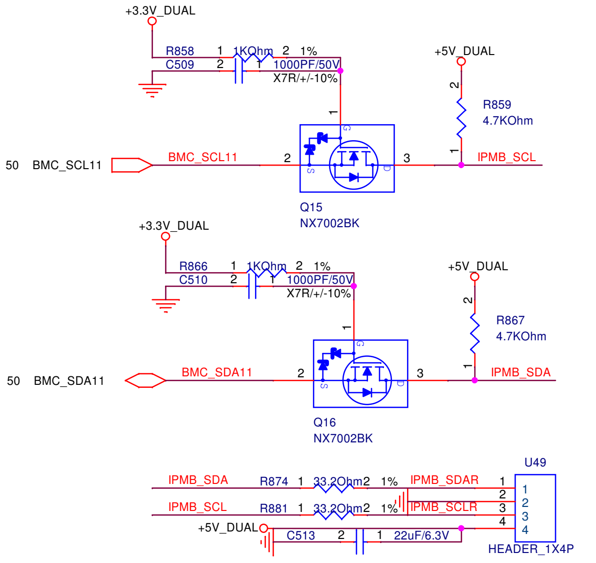

+3.3V_DUAL
R858 1 1KOhm 2 1%
C509 2 1 1000PF/50V X7R/+/-10%
+5V_DUAL
R859 4.7KOhm
50 BMC_SCL11
BMC_SCL11
IPMB_SCL
Q15 NX7002BK
R866 1 1KOhm 2 1%
C510 2 1 1000PF/50V X7R/+/-10%
R867 4.7KOhm
50 BMC_SDA11
BMC_SDA11
IPMB_SDA
Q16 NX7002BK
U49
IPMB_SDA R874 1 33.2Ohm 2 1% IPMB_SDAR
IPMB_SCL R881 1 33.2Ohm 2 1% IPMB_SCLR
+5V_DUAL C513 2 1 22uF/6.3V
HEADER_1X4P

SMLINK0

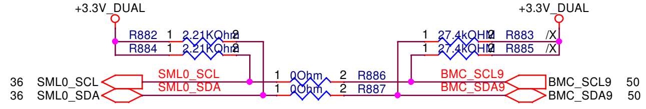

+3.3V_DUAL
R882 1 2.21KOhm 2
R884 1 2.21KOhm 2
1 27.4kOHM 2 R883 /X
1 27.4kOHM 2 R885 /X
36 SML0_SCL
36 SML0_SDA
SML0_SCL
SML0_SDA
1 0Ohm 2 R886
1 0Ohm 2 R887
BMC_SCL9
BMC_SDA9
BMC_SCL9 50
BMC_SDA9 50

PROCHOT#

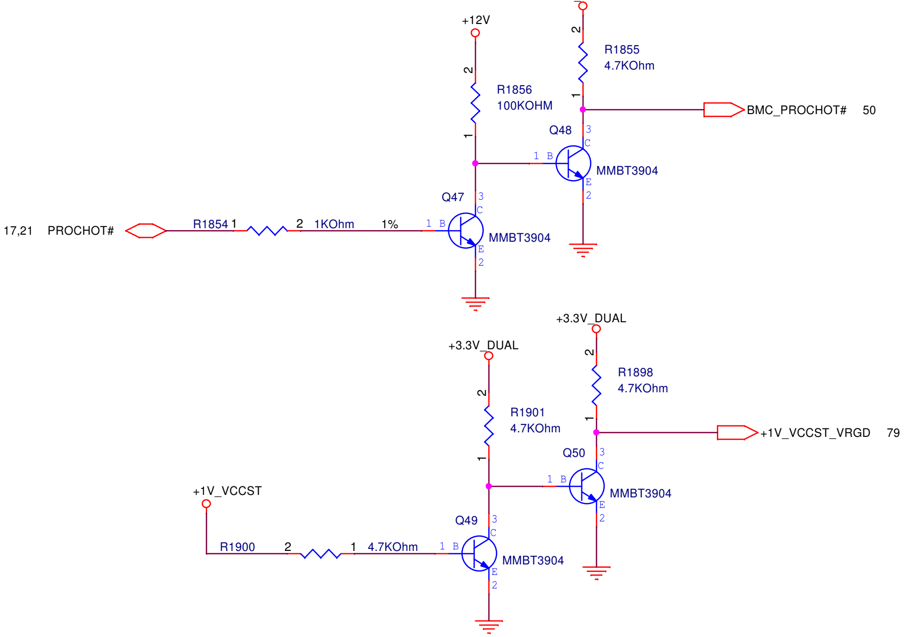

+12V
+3.3V_DUAL
R1855 4.7KOhm
R1856 100KOHM
BMC_PROCHOT# 50
Q48 MMBT3904
Q47 MMBT3904
17,21 PROCHOT#
R1854 1 2 1KOhm 1%
R1898 4.7KOhm
R1901 4.7KOhm
+1V_VCCST_VRGD 79
Q50 MMBT3904
+1V_VCCST
R1900 2 1 4.7KOhm
Q49 MMBT3904

HOST_SMBUS

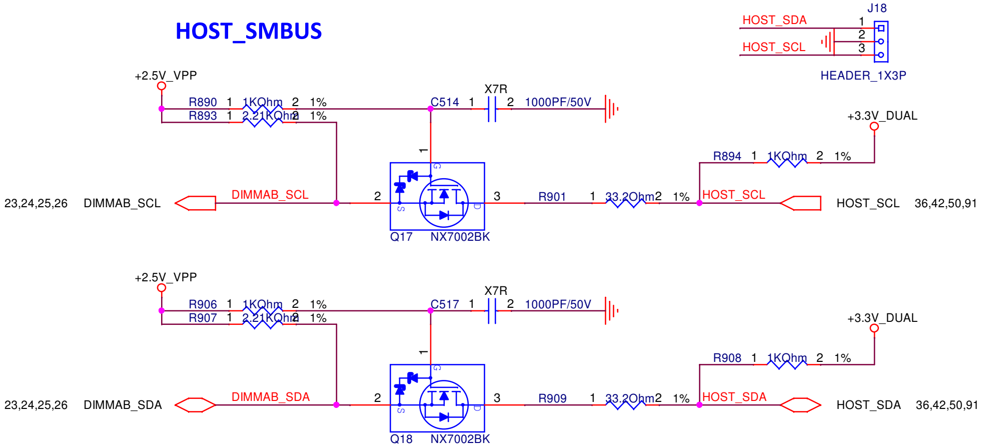

J18
HOST_SDA
HOST_SCL
HEADER_1X3P
+2.5V_VPP
R890 1 1KOhm 2 1%
R893 1 2.21KOhm 2 1%
X7R
C514 1 2 1000PF/50V
+3.3V_DUAL
R894 1 1KOhm 2 1%
23,24,25,26 DIMMAB_SCL
DIMMAB_SCL
R901 1 33.2Ohm 2 1%
HOST_SCL
HOST_SCL 36,42,50,91
Q17 NX7002BK
R906 1 1KOhm 2 1%
R907 1 2.21KOhm 2 1%
C517 1 2 1000PF/50V
R908 1 1KOhm 2 1%
23,24,25,26 DIMMAB_SDA
DIMMAB_SDA
R909 1 33.2Ohm 2 1%
HOST_SDA
HOST_SDA 36,42,50,91
Q18 NX7002BK

FRU_SMBUS

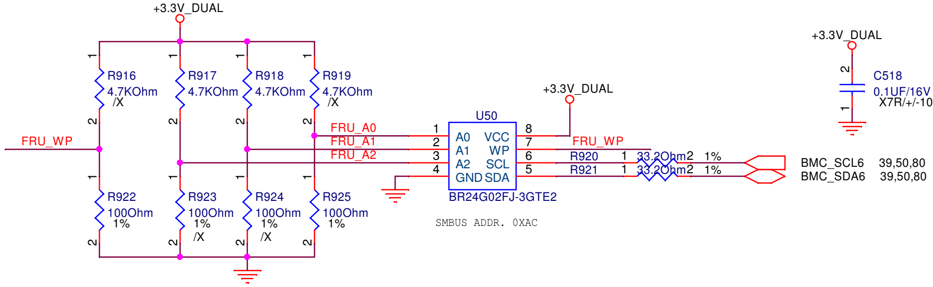

+3.3V_DUAL
R916 4.7KOhm /X
R917 4.7KOhm
R918 4.7KOhm
R919 4.7KOhm /X
FRU_WP
FRU_A0
FRU_A1
FRU_A2
R922 100Ohm 1%
R923 100Ohm 1% /X
R924 100Ohm 1% /X
R925 100Ohm 1%
U50
A0 A1 A2 GND VCC WP SCL SDA
BR24G02FJ-3GTE2
SMBUS ADDR. 0XAC
R920 1 33.2Ohm 2 1%
R921 1 33.2Ohm 2 1%
BMC_SCL6 39,50,80
BMC_SDA6 39,50,80
C518 0.1UF/16V X7R/+/-10%

<Variant Name>

PEGATRON
PEGATRON PROPRIETARY AND CONFIDENTIAL
Title : 061 AST2500 SMBUS
PEGATRON CORPORATION
Engineer: Ryan2_Wang

Size	Project Name	Rev
A3	CLCL-N	1.00

Date: Tuesday, November 27, 2018 Sheet 61 of 110

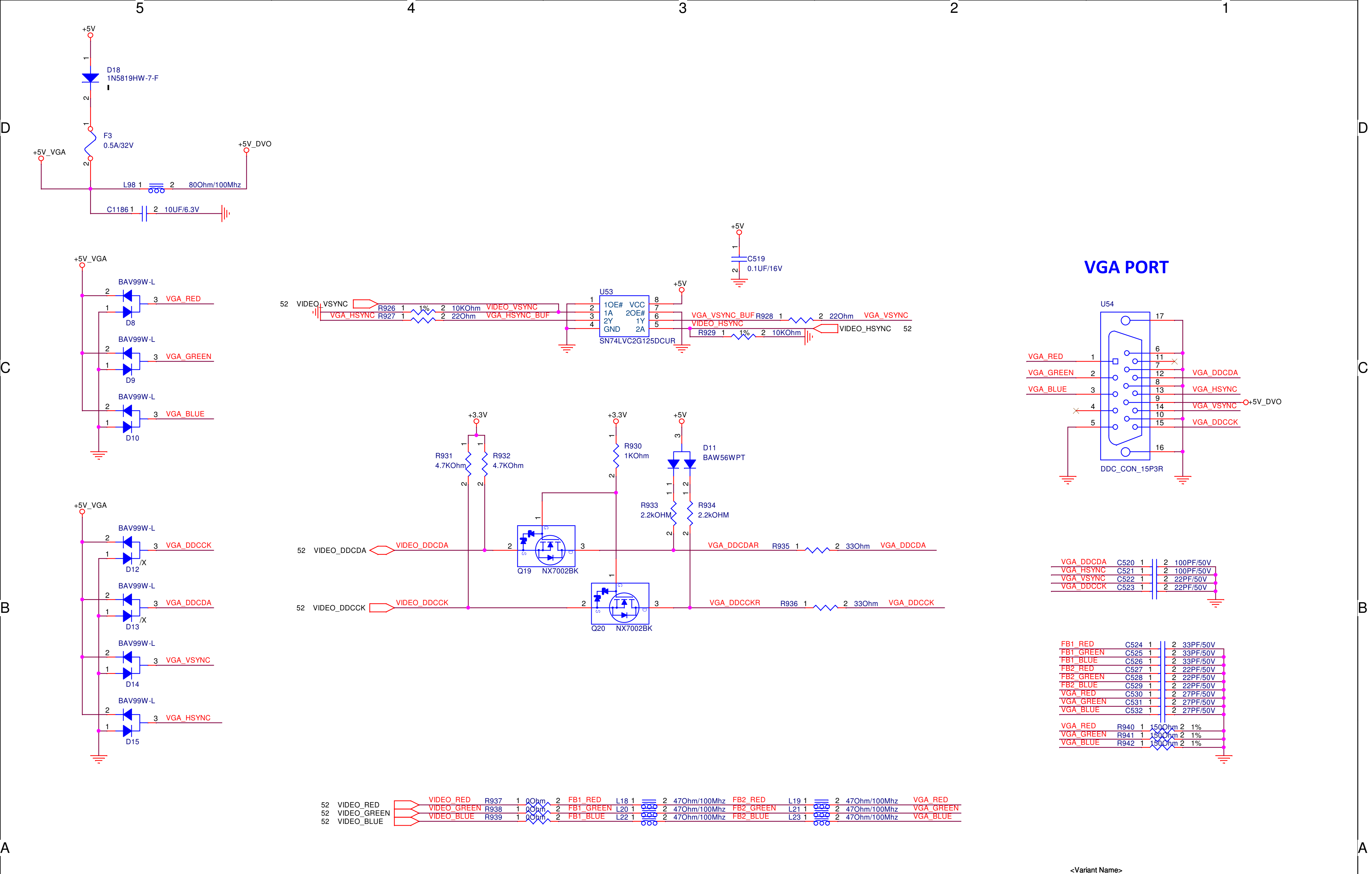

5
4
3
2
1
D
C
B
A
+5V
D18
1N5819HW-7-F
F3
0.5A/32V
+5V_VGA
+5V_DVO
L98
80Ohm/100Mhz
C1186
10UF/6.3V
+5V_VGA
BAV99W-L
VGA_RED
D8
BAV99W-L
VGA_GREEN
D9
BAV99W-L
VGA_BLUE
D10
+5V_VGA
BAV99W-L
VGA_DDCCK
D12
BAV99W-L
VGA_DDCDA
D13
BAV99W-L
VGA_VSYNC
D14
BAV99W-L
VGA_HSYNC
D15
+5V
C519
0.1UF/16V
52 VIDEO_VSYNC
R926 1% 10KOhm VIDEO_VSYNC
VGA_HSYNC R927 22Ohm VGA_HSYNC_BUF
U53
1OE# VCC
1A 2OE#
2Y 1Y
GND 2A
SN74LVC2G125DCUR
+5V
VGA_VSYNC_BUF R928 22Ohm VGA_VSYNC
VIDEO_HSYNC
R929 1% 10KOhm
VIDEO_HSYNC 52
VGA PORT
U54
DDC_CON_15P3R
VGA_RED
VGA_GREEN
VGA_BLUE
VGA_DDCDA
VGA_HSYNC
VGA_VSYNC
VGA_DDCCK
+5V_DVO
+3.3V
R931 4.7KOhm
R932 4.7KOhm
+3.3V
R930 1KOhm
+5V
D11
BAW56WPT
R933 2.2kOHM
R934 2.2kOHM
52 VIDEO_DDCDA
VIDEO_DDCDA
Q19 NX7002BK
VGA_DDCDAR
R935 33Ohm VGA_DDCDA
52 VIDEO_DDCCK
VIDEO_DDCCK
Q20 NX7002BK
VGA_DDCCKR
R936 33Ohm VGA_DDCCK
VGA_DDCDA C520 100PF/50V
VGA_HSYNC C521 100PF/50V
VGA_VSYNC C522 22PF/50V
VGA_DDCCK C523 22PF/50V
FB1_RED C524 33PF/50V
FB1_GREEN C525 33PF/50V
FB1_BLUE C526 33PF/50V
FB2_RED C527 22PF/50V
FB2_GREEN C528 22PF/50V
FB2_BLUE C529 22PF/50V
VGA_RED C530 27PF/50V
VGA_GREEN C531 27PF/50V
VGA_BLUE C532 27PF/50V
VGA_RED R940 150Ohm 1%
VGA_GREEN R941 150Ohm 1%
VGA_BLUE R942 150Ohm 1%
52 VIDEO_RED
52 VIDEO_GREEN
52 VIDEO_BLUE
VIDEO_RED R937 0Ohm FB1_RED L18 47Ohm/100Mhz FB2_RED L19 47Ohm/100Mhz VGA_RED
VIDEO_GREEN R938 0Ohm FB1_GREEN L20 47Ohm/100Mhz FB2_GREEN L21 47Ohm/100Mhz VGA_GREEN
VIDEO_BLUE R939 0Ohm FB1_BLUE L22 47Ohm/100Mhz FB2_BLUE L23 47Ohm/100Mhz VGA_BLUE

<Variant Name>

PEGATRON

Title : 062 AST2500 VGA

PEGATRON PROPRIETARY AND CONFIDENTIAL

PEGATRON CORPORATION

Engineer: *Ryan2_Wang*

Size A3

Project Name CLCL-N

Rev 1.00

Date: Tuesday, November 27, 2018

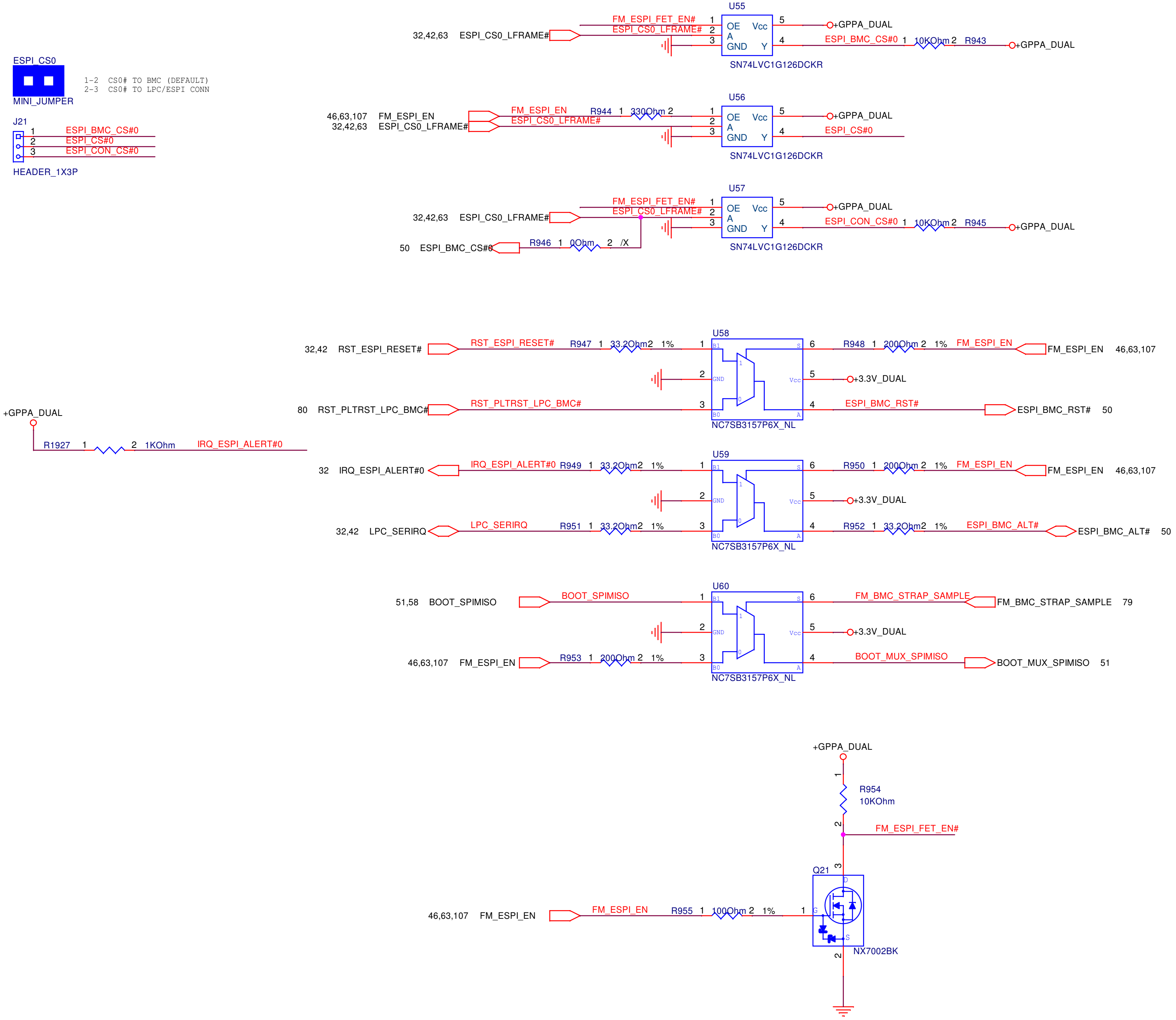
U55
FM_ESPI_FET_EN#
ESPI_CS0_LFRAME#
32,42,63 ESPI_CS0_LFRAME#
OE Vcc
A
GND Y
+GPPA_DUAL
ESPI_BMC_CS#0
10KOhm
R943
SN74LVC1G126DCKR
ESPI_CS0
MINI_JUMPER
1-2 CS0# TO BMC (DEFAULT)
2-3 CS0# TO LPC/ESPI CONN
J21
ESPI_BMC_CS#0
ESPI_CS#0
ESPI_CON_CS#0
HEADER_1X3P
U56
46,63,107 FM_ESPI_EN
32,42,63 ESPI_CS0_LFRAME#
FM_ESPI_EN
R944 330Ohm
ESPI_CS#0
U57
ESPI_CON_CS#0
R945
50 ESPI_BMC_CS#0
R946 0Ohm /X
U58
32,42 RST_ESPI_RESET#
RST_ESPI_RESET#
R947 33.2Ohm 1%
R948 200Ohm 1%
FM_ESPI_EN 46,63,107
+3.3V_DUAL
80 RST_PLTRST_LPC_BMC#
RST_PLTRST_LPC_BMC#
ESPI_BMC_RST#
ESPI_BMC_RST# 50
NC7SB3157P6X_NL
+GPPA_DUAL
R1927 1KOhm
IRQ_ESPI_ALERT#0
U59
32 IRQ_ESPI_ALERT#0
R949 33.2Ohm 1%
R950 200Ohm 1%
32,42 LPC_SERIRQ
LPC_SERIRQ
R951 33.2Ohm 1%
R952 33.2Ohm 1%
ESPI_BMC_ALT#
ESPI_BMC_ALT# 50
U60
51,58 BOOT_SPIMISO
BOOT_SPIMISO
FM_BMC_STRAP_SAMPLE
FM_BMC_STRAP_SAMPLE 79
46,63,107 FM_ESPI_EN
R953 200Ohm 1%
BOOT_MUX_SPIMISO
BOOT_MUX_SPIMISO 51
+GPPA_DUAL
R954
10KOhm
FM_ESPI_FET_EN#
Q21
46,63,107 FM_ESPI_EN
R955 100Ohm 1%
NX7002BK

<Variant Name>

PEGATRON Title : 063 ESPI

PEGATRON PROPRIETARY AND CONFIDENTIAL

PEGATRON CORPORATION Engineer: *Ryan2_Wang*

Size	Project Name	Rev
A3	CLCL-N	1.00

Date: Tuesday, November 27, 2018 Sheet 63 of 110

5 4 3 2 1

D

C

B

A

<Variant Name>

PEGATRON **Title :** 064 CKMNG

PEGATRON PROPRIETARY AND CONFIDENTIAL

PEGATRON CORPORATION **Engineer:** *Larry_Chou*

Size	Project Name	Rev
A3	CLCL-N	1.00

Date: Tuesday, November 27, 2018 Sheet 64 of 110

5 4 3 2 1

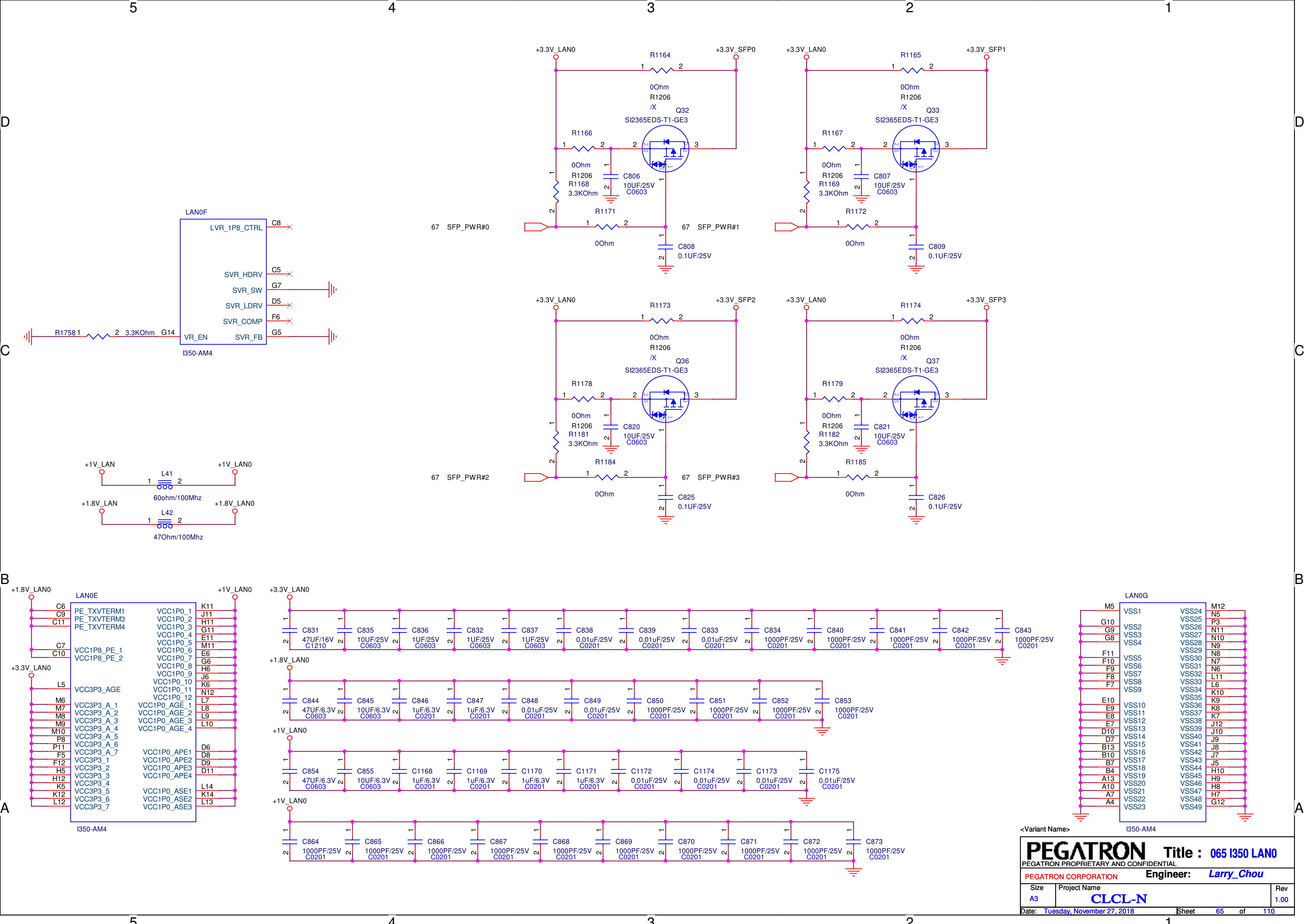
5
4
3
2
1
D
C
B
A
+3.3V_LAN0
R1164
+3.3V_SFP0
0Ohm
R1206
/X
Q32
SI2365EDS-T1-GE3
R1166
0Ohm
R1206
R1168
3.3KOhm
C806
10UF/25V
C0603
R1171
0Ohm
67 SFP_PWR#0
67 SFP_PWR#1
C808
0.1UF/25V
+3.3V_LAN0
R1165
+3.3V_SFP1
0Ohm
R1206
/X
Q33
SI2365EDS-T1-GE3
R1167
0Ohm
R1206
R1169
3.3KOhm
C807
10UF/25V
C0603
R1172
0Ohm
C809
0.1UF/25V
LAN0F
LVR_1P8_CTRL C8
SVR_HDRV C5
SVR_SW G7
SVR_LDRV D5
SVR_COMP F6
VR_EN G14
SVR_FB G5
I350-AM4
R1758 1 2 3.3KOhm
+3.3V_LAN0
R1173
+3.3V_SFP2
0Ohm
R1206
/X
Q36
SI2365EDS-T1-GE3
R1178
0Ohm
R1206
R1181
3.3KOhm
C820
10UF/25V
C0603
R1184
0Ohm
67 SFP_PWR#2
67 SFP_PWR#3
C825
0.1UF/25V
+3.3V_LAN0
R1174
+3.3V_SFP3
0Ohm
R1206
/X
Q37
SI2365EDS-T1-GE3
R1179
0Ohm
R1206
R1182
3.3KOhm
C821
10UF/25V
C0603
R1185
0Ohm
C826
0.1UF/25V
+1V_LAN
+1V_LAN0
L41
60ohm/100Mhz
+1.8V_LAN
+1.8V_LAN0
L42
47Ohm/100Mhz
+1.8V_LAN0
+1V_LAN0
LAN0E
C6 PE_TXVTERM1
C9 PE_TXVTERM3
C11 PE_TXVTERM4
C7 VCC1P8_PE_1
C10 VCC1P8_PE_2
+3.3V_LAN0
L5 VCC3P3_AGE
M6 VCC3P3_A_1
M7 VCC3P3_A_2
M8 VCC3P3_A_3
M9 VCC3P3_A_4
M10 VCC3P3_A_5
P8 VCC3P3_A_6
P11 VCC3P3_A_7
F5 VCC3P3_1
F12 VCC3P3_2
H5 VCC3P3_3
H12 VCC3P3_4
K5 VCC3P3_5
K12 VCC3P3_6
L12 VCC3P3_7
VCC1P0_1 K11
VCC1P0_2 J11
VCC1P0_3 H11
VCC1P0_4 G11
VCC1P0_5 M11
VCC1P0_6 E11
VCC1P0_7 E6
VCC1P0_8 G6
VCC1P0_9 H6
VCC1P0_10 J6
VCC1P0_11 K6
VCC1P0_12 N12
VCC1P0_AGE_1 L7
VCC1P0_AGE_2 L8
VCC1P0_AGE_3 L9
VCC1P0_AGE_4 L10
VCC1P0_APE1 D6
VCC1P0_APE2 D8
VCC1P0_APE3 D9
VCC1P0_APE4 D11
VCC1P0_ASE1 L14
VCC1P0_ASE2 K14
VCC1P0_ASE3 L13
I350-AM4
+3.3V_LAN0
C831 47UF/16V C1210
C835 10UF/25V C0603
C836 1UF/25V C0603
C832 1UF/25V C0603
C837 1UF/25V C0603
C838 0.01uF/25V C0201
C839 0.01uF/25V C0201
C833 0.01uF/25V C0201
C834 1000PF/25V C0201
C840 1000PF/25V C0201
C841 1000PF/25V C0201
C842 1000PF/25V C0201
C843 1000PF/25V C0201
+1.8V_LAN0
C844 47UF/6.3V C0603
C845 10UF/6.3V C0603
C846 1uF/6.3V C0201
C847 1uF/6.3V C0201
C848 0.01uF/25V C0201
C849 0.01uF/25V C0201
C850 1000PF/25V C0201
C851 1000PF/25V C0201
C852 1000PF/25V C0201
C853 1000PF/25V C0201
+1V_LAN0
C854 47UF/6.3V C0603
C855 10UF/6.3V C0603
C1168 1uF/6.3V C0201
C1169 1uF/6.3V C0201
C1170 1uF/6.3V C0201
C1171 1uF/6.3V C0201
C1172 0.01uF/25V C0201
C1174 0.01uF/25V C0201
C1173 0.01uF/25V C0201
C1175 0.01uF/25V C0201
+1V_LAN0
C864 1000PF/25V C0201
C865 1000PF/25V C0201
C866 1000PF/25V C0201
C867 1000PF/25V C0201
C868 1000PF/25V C0201
C869 1000PF/25V C0201
C870 1000PF/25V C0201
C871 1000PF/25V C0201
C872 1000PF/25V C0201
C873 1000PF/25V C0201
LAN0G
M5 VSS1
G10 VSS2
G9 VSS3
G8 VSS4
F11 VSS5
F10 VSS6
F9 VSS7
F8 VSS8
F7 VSS9
E10 VSS10
E9 VSS11
E8 VSS12
E7 VSS13
D10 VSS14
D7 VSS15
B13 VSS16
B10 VSS17
B7 VSS18
B4 VSS19
A13 VSS20
A10 VSS21
A7 VSS22
A4 VSS23
VSS24 M12
VSS25 N5
VSS26 P3
VSS27 N11
VSS28 N10
VSS29 N9
VSS30 N8
VSS31 N7
VSS32 N6
VSS33 L11
VSS34 L6
VSS35 K10
VSS36 K9
VSS37 K8
VSS38 K7
VSS39 J12
VSS40 J10
VSS41 J9
VSS42 J8
VSS43 J7
VSS44 J5
VSS45 H10
VSS46 H9
VSS47 H8
VSS48 H7
VSS49 G12
I350-AM4
<Variant Name>

PEGATRON Title : **065 I350 LAN0**
PEGATRON PROPRIETARY AND CONFIDENTIAL
PEGATRON CORPORATION Engineer: *Larry_Chou*

Size	Project Name	Rev
A3	CLCL-N	1.00

Date: Tuesday, November 27, 2018 Sheet 65 of 110

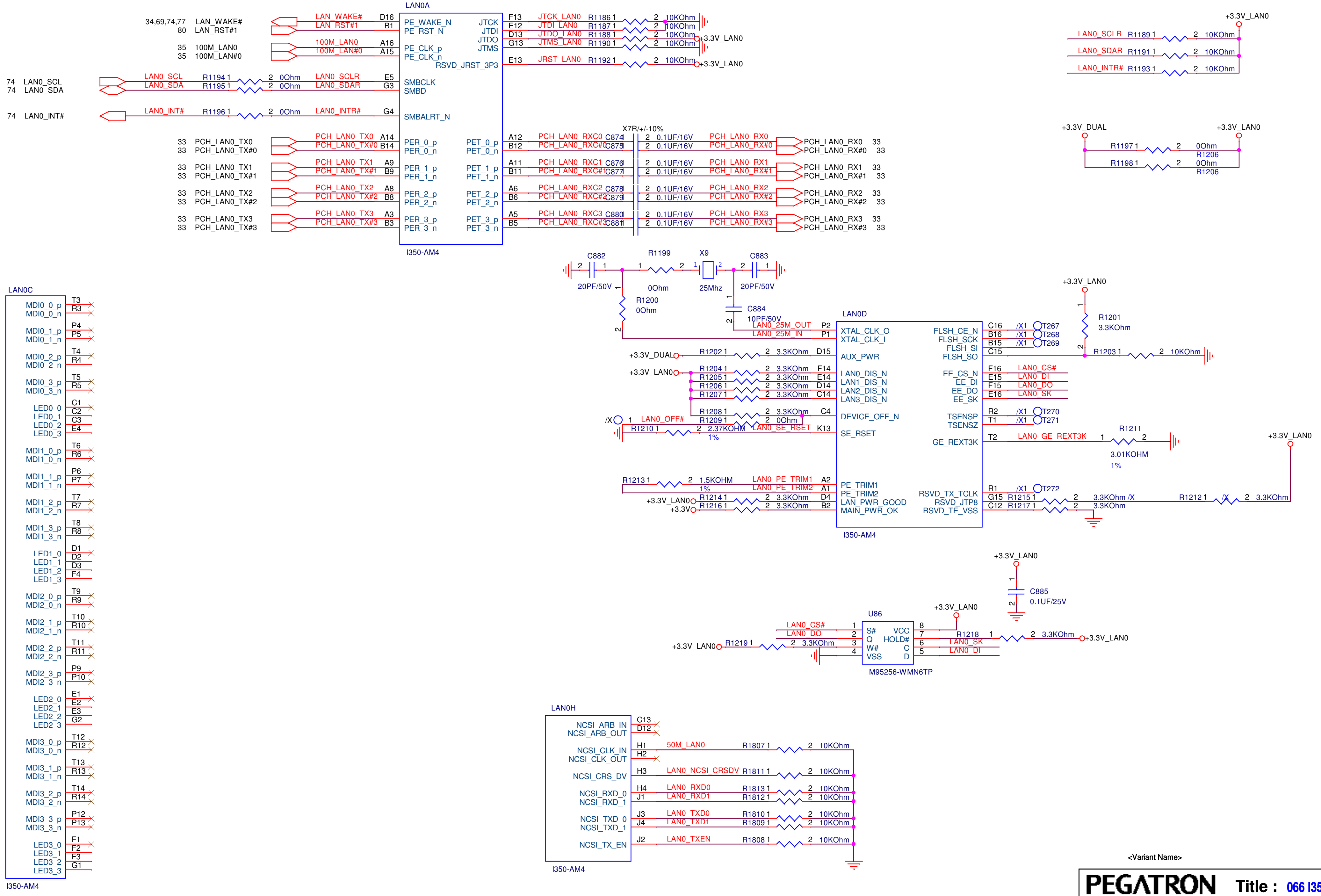
LAN0A
34,69,74,77 LAN_WAKE#
80 LAN_RST#1
35 100M_LAN0
35 100M_LAN#0
74 LAN0_SCL
74 LAN0_SDA
74 LAN0_INT#
LAN_WAKE#
LAN_RST#1
100M_LAN0
100M_LAN#0
LAN0_SCL R1194 0Ohm
LAN0_SDA R1195 0Ohm
LAN0_INT# R1196 0Ohm
LAN0_SCLR
LAN0_SDAR
LAN0_INTR#
PE_WAKE_N
PE_RST_N
PE_CLK_p
PE_CLK_n
SMBCLK
SMBD
SMBALRT_N
JTCK
JTDI
JTDO
JTMS
RSVD_JRST_3P3
JTCK_LAN0 R1186 10KOhm
JTDI_LAN0 R1187 10KOhm
JTDO_LAN0 R1188 10KOhm
JTMS_LAN0 R1190 10KOhm
JRST_LAN0 R1192 10KOhm
+3.3V_LAN0
33 PCH_LAN0_TX0
33 PCH_LAN0_TX#0
33 PCH_LAN0_TX1
33 PCH_LAN0_TX#1
33 PCH_LAN0_TX2
33 PCH_LAN0_TX#2
33 PCH_LAN0_TX3
33 PCH_LAN0_TX#3
PER_0_p
PER_0_n
PER_1_p
PER_1_n
PER_2_p
PER_2_n
PER_3_p
PER_3_n
PET_0_p
PET_0_n
PET_1_p
PET_1_n
PET_2_p
PET_2_n
PET_3_p
PET_3_n
X7R/+/-10%
PCH_LAN0_RXC0 C874 0.1UF/16V
PCH_LAN0_RXC#0 C875 0.1UF/16V
PCH_LAN0_RXC1 C876 0.1UF/16V
PCH_LAN0_RXC#1 C877 0.1UF/16V
PCH_LAN0_RXC2 C878 0.1UF/16V
PCH_LAN0_RXC#2 C879 0.1UF/16V
PCH_LAN0_RXC3 C880 0.1UF/16V
PCH_LAN0_RXC#3 C881 0.1UF/16V
PCH_LAN0_RX0 33
PCH_LAN0_RX#0 33
PCH_LAN0_RX1 33
PCH_LAN0_RX#1 33
PCH_LAN0_RX2 33
PCH_LAN0_RX#2 33
PCH_LAN0_RX3 33
PCH_LAN0_RX#3 33
I350-AM4
+3.3V_LAN0
LAN0_SCLR R1189 10KOhm
LAN0_SDAR R1191 10KOhm
LAN0_INTR# R1193 10KOhm
+3.3V_DUAL
+3.3V_LAN0
R1197 0Ohm R1206
R1198 0Ohm R1206
C882 20PF/50V
R1199 0Ohm
X9 25Mhz
C883 20PF/50V
R1200 0Ohm
C884 10PF/50V
LAN0D
LAN0_25M_OUT
LAN0_25M_IN
XTAL_CLK_O
XTAL_CLK_I
AUX_PWR
LAN0_DIS_N
LAN1_DIS_N
LAN2_DIS_N
LAN3_DIS_N
DEVICE_OFF_N
SE_RSET
PE_TRIM1
PE_TRIM2
LAN_PWR_GOOD
MAIN_PWR_OK
FLSH_CE_N
FLSH_SCK
FLSH_SI
FLSH_SO
EE_CS_N
EE_DI
EE_DO
EE_SK
TSENSP
TSENSZ
GE_REXT3K
RSVD_TX_TCLK
RSVD_JTP8
RSVD_TE_VSS
+3.3V_DUAL R1202 3.3KOhm
+3.3V_LAN0 R1204 3.3KOhm
R1205 3.3KOhm
R1206 3.3KOhm
R1207 3.3KOhm
R1208 3.3KOhm
/X LAN0_OFF# R1209 0Ohm
R1210 2.37KOHM 1% LAN0_SE_RSET
R1213 1.5KOHM 1% LAN0_PE_TRIM1 LAN0_PE_TRIM2
+3.3V_LAN0 R1214 3.3KOhm
+3.3V R1216 3.3KOhm
I350-AM4
/X1 T267
/X1 T268
/X1 T269
R1201 3.3KOhm
R1203 10KOhm
LAN0_CS#
LAN0_DI
LAN0_DO
LAN0_SK
/X1 T270
/X1 T271
LAN0_GE_REXT3K R1211 3.01KOHM 1%
/X1 T272
R1215 3.3KOhm /X
R1217 3.3KOhm
R1212 /X 3.3KOhm
+3.3V_LAN0
C885 0.1UF/25V
U86
S#
Q
W#
VSS
VCC
HOLD#
C
D
M95256-WMN6TP
LAN0_CS#
LAN0_DO
+3.3V_LAN0 R1219 3.3KOhm
R1218 3.3KOhm
LAN0_SK
LAN0_DI
LAN0C
MDI0_0_p MDI0_0_n MDI0_1_p MDI0_1_n MDI0_2_p MDI0_2_n MDI0_3_p MDI0_3_n
LED0_0 LED0_1 LED0_2 LED0_3
MDI1_0_p MDI1_0_n MDI1_1_p MDI1_1_n MDI1_2_p MDI1_2_n MDI1_3_p MDI1_3_n
LED1_0 LED1_1 LED1_2 LED1_3
MDI2_0_p MDI2_0_n MDI2_1_p MDI2_1_n MDI2_2_p MDI2_2_n MDI2_3_p MDI2_3_n
LED2_0 LED2_1 LED2_2 LED2_3
MDI3_0_p MDI3_0_n MDI3_1_p MDI3_1_n MDI3_2_p MDI3_2_n MDI3_3_p MDI3_3_n
LED3_0 LED3_1 LED3_2 LED3_3
I350-AM4
LAN0H
NCSI_ARB_IN
NCSI_ARB_OUT
NCSI_CLK_IN
NCSI_CLK_OUT
NCSI_CRS_DV
NCSI_RXD_0
NCSI_RXD_1
NCSI_TXD_0
NCSI_TXD_1
NCSI_TX_EN
50M_LAN0 R1807 10KOhm
LAN0_NCSI_CRSDV R1811 10KOhm
LAN0_RXD0 R1813 10KOhm
LAN0_RXD1 R1812 10KOhm
LAN0_TXD0 R1810 10KOhm
LAN0_TXD1 R1809 10KOhm
LAN0_TXEN R1808 10KOhm
I350-AM4

<Variant Name>

PEGATRON Title : 066 I350 LAN0
PEGATRON PROPRIETARY AND CONFIDENTIAL
PEGATRON CORPORATION Engineer: *Larry_Chou*

Size	Project Name	Rev
A3	CLCL-N	1.00

Date: Tuesday, November 27, 2018 Sheet 66 of 110

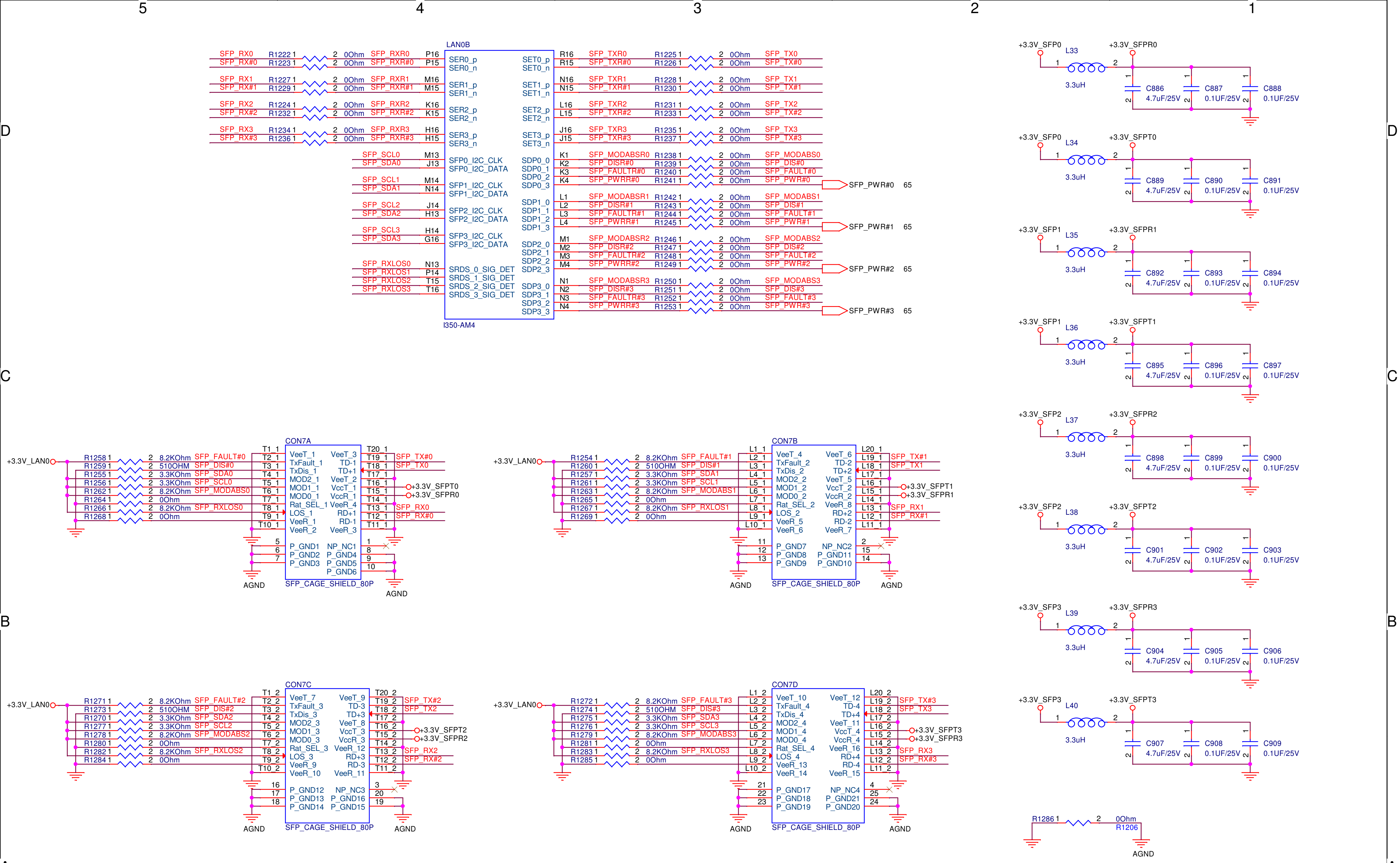
5
4
3
2
1
D
C
B
A
LAN0B
I350-AM4
SER0_p
SER0_n
SER1_p
SER1_n
SER2_p
SER2_n
SER3_p
SER3_n
SET0_p
SET0_n
SET1_p
SET1_n
SET2_p
SET2_n
SET3_p
SET3_n
SFP0_I2C_CLK
SFP0_I2C_DATA
SFP1_I2C_CLK
SFP1_I2C_DATA
SFP2_I2C_CLK
SFP2_I2C_DATA
SFP3_I2C_CLK
SFP3_I2C_DATA
SRDS_0_SIG_DET
SRDS_1_SIG_DET
SRDS_2_SIG_DET
SRDS_3_SIG_DET
SDP0_0
SDP0_1
SDP0_2
SDP0_3
SDP1_0
SDP1_1
SDP1_2
SDP1_3
SDP2_0
SDP2_1
SDP2_2
SDP2_3
SDP3_0
SDP3_1
SDP3_2
SDP3_3
SFP_RX0 R1222 0Ohm SFP_RXR0 P16
SFP_RX#0 R1223 0Ohm SFP_RXR#0 P15
SFP_RX1 R1227 0Ohm SFP_RXR1 M16
SFP_RX#1 R1229 0Ohm SFP_RXR#1 M15
SFP_RX2 R1224 0Ohm SFP_RXR2 K16
SFP_RX#2 R1232 0Ohm SFP_RXR#2 K15
SFP_RX3 R1234 0Ohm SFP_RXR3 H16
SFP_RX#3 R1236 0Ohm SFP_RXR#3 H15
SFP_SCL0 M13
SFP_SDA0 J13
SFP_SCL1 M14
SFP_SDA1 N14
SFP_SCL2 J14
SFP_SDA2 H13
SFP_SCL3 H14
SFP_SDA3 G16
SFP_RXLOS0 N13
SFP_RXLOS1 P14
SFP_RXLOS2 T15
SFP_RXLOS3 T16
R16 SFP_TXR0 R1225 0Ohm SFP_TX0
R15 SFP_TXR#0 R1226 0Ohm SFP_TX#0
N16 SFP_TXR1 R1228 0Ohm SFP_TX1
N15 SFP_TXR#1 R1230 0Ohm SFP_TX#1
L16 SFP_TXR2 R1231 0Ohm SFP_TX2
L15 SFP_TXR#2 R1233 0Ohm SFP_TX#2
J16 SFP_TXR3 R1235 0Ohm SFP_TX3
J15 SFP_TXR#3 R1237 0Ohm SFP_TX#3
K1 SFP_MODABSR0 R1238 0Ohm SFP_MODABS0
K2 SFP_DISR#0 R1239 0Ohm SFP_DIS#0
K3 SFP_FAULTR#0 R1240 0Ohm SFP_FAULT#0
K4 SFP_PWRR#0 R1241 0Ohm SFP_PWR#0
SFP_PWR#0 65
L1 SFP_MODABSR1 R1242 0Ohm SFP_MODABS1
L2 SFP_DISR#1 R1243 0Ohm SFP_DIS#1
L3 SFP_FAULTR#1 R1244 0Ohm SFP_FAULT#1
L4 SFP_PWRR#1 R1245 0Ohm SFP_PWR#1
SFP_PWR#1 65
M1 SFP_MODABSR2 R1246 0Ohm SFP_MODABS2
M2 SFP_DISR#2 R1247 0Ohm SFP_DIS#2
M3 SFP_FAULTR#2 R1248 0Ohm SFP_FAULT#2
M4 SFP_PWRR#2 R1249 0Ohm SFP_PWR#2
SFP_PWR#2 65
N1 SFP_MODABSR3 R1250 0Ohm SFP_MODABS3
N2 SFP_DISR#3 R1251 0Ohm SFP_DIS#3
N3 SFP_FAULTR#3 R1252 0Ohm SFP_FAULT#3
N4 SFP_PWRR#3 R1253 0Ohm SFP_PWR#3
SFP_PWR#3 65
+3.3V_SFP0 L33 3.3uH +3.3V_SFPR0 C886 4.7uF/25V C887 0.1UF/25V C888 0.1UF/25V
+3.3V_SFP0 L34 3.3uH +3.3V_SFPT0 C889 4.7uF/25V C890 0.1UF/25V C891 0.1UF/25V
+3.3V_SFP1 L35 3.3uH +3.3V_SFPR1 C892 4.7uF/25V C893 0.1UF/25V C894 0.1UF/25V
+3.3V_SFP1 L36 3.3uH +3.3V_SFPT1 C895 4.7uF/25V C896 0.1UF/25V C897 0.1UF/25V
+3.3V_SFP2 L37 3.3uH +3.3V_SFPR2 C898 4.7uF/25V C899 0.1UF/25V C900 0.1UF/25V
+3.3V_SFP2 L38 3.3uH +3.3V_SFPT2 C901 4.7uF/25V C902 0.1UF/25V C903 0.1UF/25V
+3.3V_SFP3 L39 3.3uH +3.3V_SFPR3 C904 4.7uF/25V C905 0.1UF/25V C906 0.1UF/25V
+3.3V_SFP3 L40 3.3uH +3.3V_SFPT3 C907 4.7uF/25V C908 0.1UF/25V C909 0.1UF/25V
CON7A
SFP_CAGE_SHIELD_80P
+3.3V_LAN0
R1258 8.2KOhm SFP_FAULT#0
R1259 510OHM SFP_DIS#0
R1255 3.3KOhm SFP_SDA0
R1256 3.3KOhm SFP_SCL0
R1262 8.2KOhm SFP_MODABS0
R1264 0Ohm
R1266 8.2KOhm SFP_RXLOS0
R1268 0Ohm
VeeT_1 TxFault_1 TxDis_1 MOD2_1 MOD1_1 MOD0_1 Rat_SEL_1 LOS_1 VeeR_1 VeeR_2
VeeT_3 TD-1 TD+1 VeeT_2 VccT_1 VccR_1 VeeR_4 RD+1 RD-1 VeeR_3
P_GND1 P_GND2 P_GND3 NP_NC1 P_GND4 P_GND5 P_GND6
SFP_TX#0 SFP_TX0 +3.3V_SFPT0 +3.3V_SFPR0 SFP_RX0 SFP_RX#0
AGND
CON7B
+3.3V_LAN0
R1254 8.2KOhm SFP_FAULT#1
R1260 510OHM SFP_DIS#1
R1257 3.3KOhm SFP_SDA1
R1261 3.3KOhm SFP_SCL1
R1263 8.2KOhm SFP_MODABS1
R1265 0Ohm
R1267 8.2KOhm SFP_RXLOS1
R1269 0Ohm
VeeT_4 TxFault_2 TxDis_2 MOD2_2 MOD1_2 MOD0_2 Rat_SEL_2 LOS_2 VeeR_5 VeeR_6
VeeT_6 TD-2 TD+2 VeeT_5 VccT_2 VccR_2 VeeR_8 RD+2 RD-2 VeeR_7
P_GND7 P_GND8 P_GND9 NP_NC2 P_GND11 P_GND10
SFP_TX#1 SFP_TX1 +3.3V_SFPT1 +3.3V_SFPR1 SFP_RX1 SFP_RX#1
CON7C
+3.3V_LAN0
R1271 8.2KOhm SFP_FAULT#2
R1273 510OHM SFP_DIS#2
R1270 3.3KOhm SFP_SDA2
R1277 3.3KOhm SFP_SCL2
R1278 8.2KOhm SFP_MODABS2
R1280 0Ohm
R1282 8.2KOhm SFP_RXLOS2
R1284 0Ohm
VeeT_7 TxFault_3 TxDis_3 MOD2_3 MOD1_3 MOD0_3 Rat_SEL_3 LOS_3 VeeR_9 VeeR_10
VeeT_9 TD-3 TD+3 VeeT_8 VccT_3 VccR_3 VeeR_12 RD+3 RD-3 VeeR_11
P_GND12 P_GND13 P_GND14 NP_NC3 P_GND16 P_GND15
SFP_TX#2 SFP_TX2 +3.3V_SFPT2 +3.3V_SFPR2 SFP_RX2 SFP_RX#2
CON7D
+3.3V_LAN0
R1272 8.2KOhm SFP_FAULT#3
R1274 510OHM SFP_DIS#3
R1275 3.3KOhm SFP_SDA3
R1276 3.3KOhm SFP_SCL3
R1279 8.2KOhm SFP_MODABS3
R1281 0Ohm
R1283 8.2KOhm SFP_RXLOS3
R1285 0Ohm
VeeT_10 TxFault_4 TxDis_4 MOD2_4 MOD1_4 MOD0_4 Rat_SEL_4 LOS_4 VeeR_13 VeeR_14
VeeT_12 TD-4 TD+4 VeeT_11 VccT_4 VccR_4 VeeR_16 RD+4 RD-4 VeeR_15
P_GND17 P_GND18 P_GND19 NP_NC4 P_GND21 P_GND20
SFP_TX#3 SFP_TX3 +3.3V_SFPT3 +3.3V_SFPR3 SFP_RX3 SFP_RX#3
R1286 0Ohm R1206
AGND

<Variant Name>

PEGATRON **Title : 067 I350 LAN0**

PEGATRON PROPRIETARY AND CONFIDENTIAL

PEGATRON CORPORATION **Engineer:** *Larry_Chou*

Size	Project Name	Rev
A3	CLCL-N	1.00

Date: Tuesday, November 27, 2018 Sheet 67 of 110

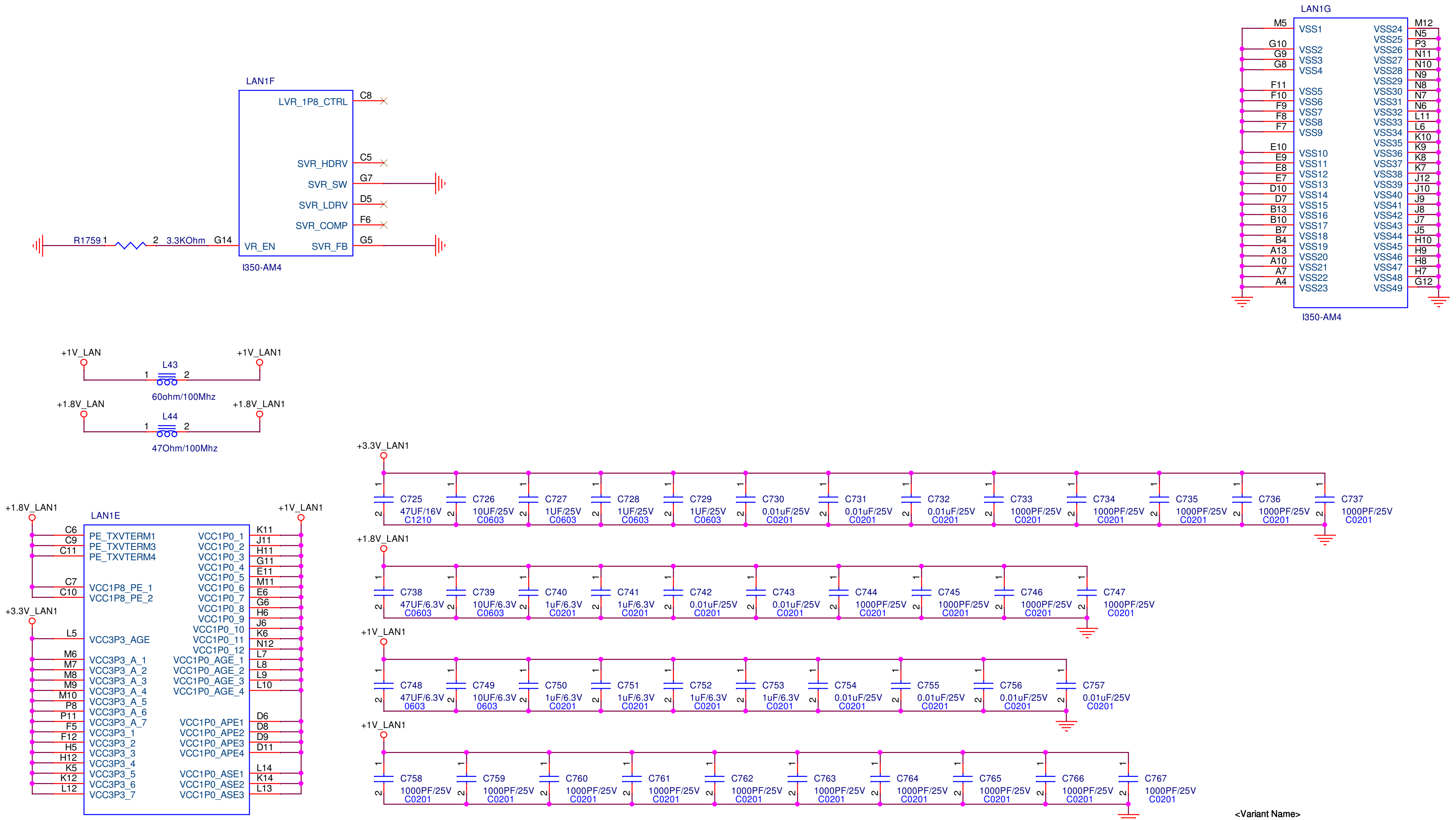
LAN1F
LVR_1P8_CTRL C8
SVR_HDRV C5
SVR_SW G7
SVR_LDRV D5
SVR_COMP F6
VR_EN G14
SVR_FB G5
R1759 1 2 3.3KOhm
I350-AM4
LAN1G
M5 VSS1
G10 VSS2
G9 VSS3
G8 VSS4
F11 VSS5
F10 VSS6
F9 VSS7
F8 VSS8
F7 VSS9
E10 VSS10
E9 VSS11
E8 VSS12
E7 VSS13
D10 VSS14
D7 VSS15
B13 VSS16
B10 VSS17
B7 VSS18
B4 VSS19
A13 VSS20
A10 VSS21
A7 VSS22
A4 VSS23
VSS24 M12
VSS25 N5
VSS26 P3
VSS27 N11
VSS28 N10
VSS29 N9
VSS30 N8
VSS31 N7
VSS32 N6
VSS33 L11
VSS34 L6
VSS35 K10
VSS36 K9
VSS37 K8
VSS38 K7
VSS39 J12
VSS40 J10
VSS41 J9
VSS42 J8
VSS43 J7
VSS44 J5
VSS45 H10
VSS46 H9
VSS47 H8
VSS48 H7
VSS49 G12
I350-AM4
+1V_LAN
+1V_LAN1
L43 1 2
60ohm/100Mhz
+1.8V_LAN
+1.8V_LAN1
L44 1 2
47Ohm/100Mhz
+1.8V_LAN1
+1V_LAN1
LAN1E
C6 PE_TXVTERM1
C9 PE_TXVTERM3
C11 PE_TXVTERM4
C7 VCC1P8_PE_1
C10 VCC1P8_PE_2
+3.3V_LAN1
L5 VCC3P3_AGE
M6 VCC3P3_A_1
M7 VCC3P3_A_2
M8 VCC3P3_A_3
M9 VCC3P3_A_4
M10 VCC3P3_A_5
P8 VCC3P3_A_6
P11 VCC3P3_A_7
F5 VCC3P3_1
F12 VCC3P3_2
H5 VCC3P3_3
H12 VCC3P3_4
K5 VCC3P3_5
K12 VCC3P3_6
L12 VCC3P3_7
VCC1P0_1 K11
VCC1P0_2 J11
VCC1P0_3 H11
VCC1P0_4 G11
VCC1P0_5 E11
VCC1P0_6 M11
VCC1P0_7 E6
VCC1P0_8 G6
VCC1P0_9 H6
VCC1P0_10 J6
VCC1P0_11 K6
VCC1P0_12 N12
VCC1P0_AGE_1 L7
VCC1P0_AGE_2 L8
VCC1P0_AGE_3 L9
VCC1P0_AGE_4 L10
VCC1P0_APE1 D6
VCC1P0_APE2 D8
VCC1P0_APE3 D9
VCC1P0_APE4 D11
VCC1P0_ASE1 L14
VCC1P0_ASE2 K14
VCC1P0_ASE3 L13
I350-AM4
+3.3V_LAN1
C725 47UF/16V C1210
C726 10UF/25V C0603
C727 1UF/25V C0603
C728 1UF/25V C0603
C729 1UF/25V C0603
C730 0.01uF/25V C0201
C731 0.01uF/25V C0201
C732 0.01uF/25V C0201
C733 1000PF/25V C0201
C734 1000PF/25V C0201
C735 1000PF/25V C0201
C736 1000PF/25V C0201
C737 1000PF/25V C0201
+1.8V_LAN1
C738 47UF/6.3V C0603
C739 10UF/6.3V C0603
C740 1uF/6.3V C0201
C741 1uF/6.3V C0201
C742 0.01uF/25V C0201
C743 0.01uF/25V C0201
C744 1000PF/25V C0201
C745 1000PF/25V C0201
C746 1000PF/25V C0201
C747 1000PF/25V C0201
+1V_LAN1
C748 47UF/6.3V 0603
C749 10UF/6.3V 0603
C750 1uF/6.3V C0201
C751 1uF/6.3V C0201
C752 1uF/6.3V C0201
C753 1uF/6.3V C0201
C754 0.01uF/25V C0201
C755 0.01uF/25V C0201
C756 0.01uF/25V C0201
C757 0.01uF/25V C0201
+1V_LAN1
C758 1000PF/25V C0201
C759 1000PF/25V C0201
C760 1000PF/25V C0201
C761 1000PF/25V C0201
C762 1000PF/25V C0201
C763 1000PF/25V C0201
C764 1000PF/25V C0201
C765 1000PF/25V C0201
C766 1000PF/25V C0201
C767 1000PF/25V C0201

<Variant Name>

PEGATRON **Title :** 068 I350 LAN1

PEGATRON PROPRIETARY AND CONFIDENTIAL

PEGATRON CORPORATION **Engineer:** *Larry_Chou*

Size	Project Name	Rev
A3	CLCL-N	1.00

Date: Tuesday, November 27, 2018 Sheet 68 of 110

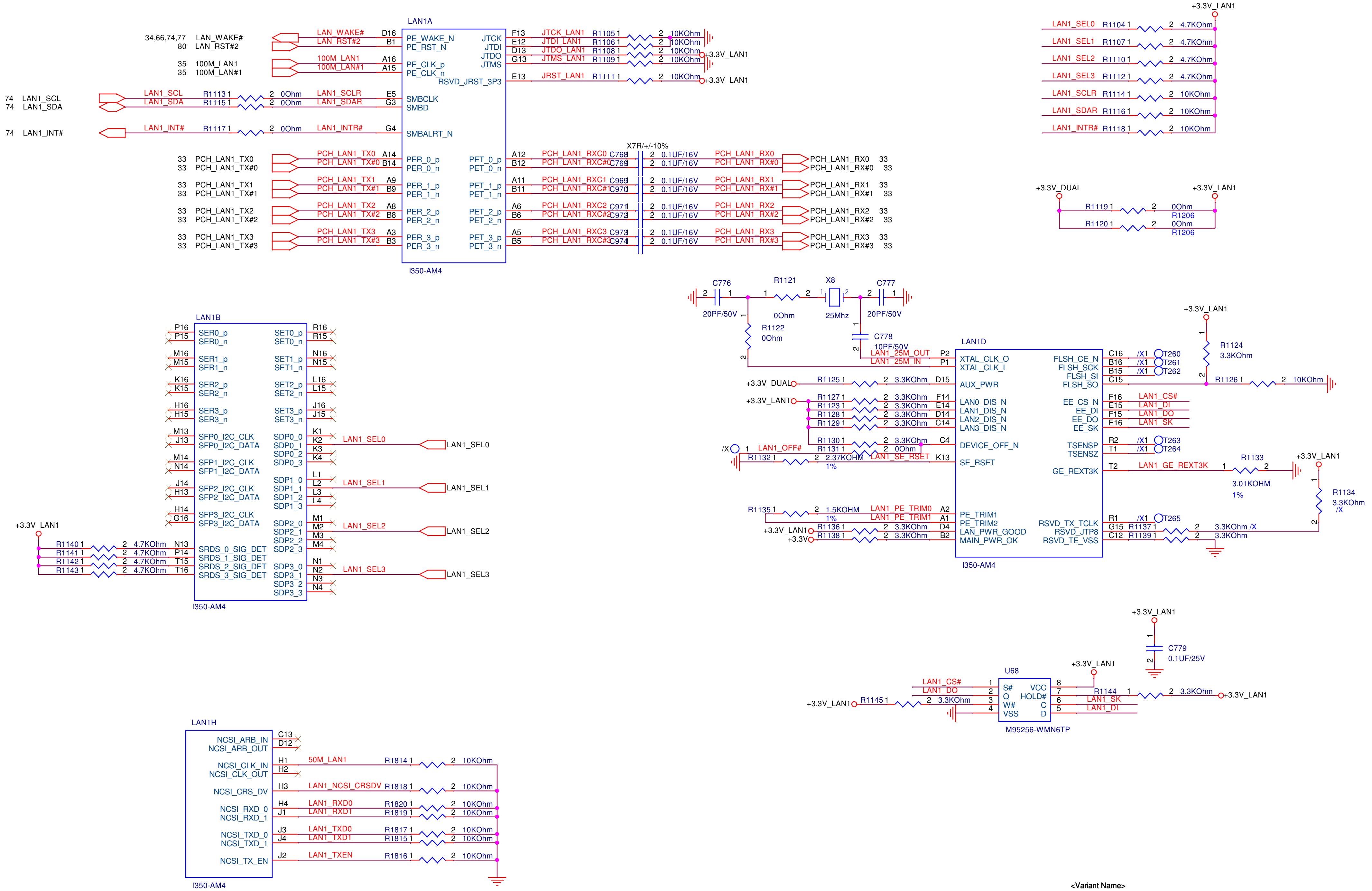
5
4
3
2
1
D
C
B
A
LAN1A
34,66,74,77 LAN_WAKE#
80 LAN_RST#2
35 100M_LAN1
35 100M_LAN#1
74 LAN1_SCL
74 LAN1_SDA
74 LAN1_INT#
LAN_WAKE# D16 PE_WAKE_N
LAN_RST#2 B1 PE_RST_N
100M_LAN1 A16 PE_CLK_p
100M_LAN#1 A15 PE_CLK_n
RSVD_JRST_3P3
LAN1_SCL R1113 0Ohm LAN1_SCLR E5 SMBCLK
LAN1_SDA R1115 0Ohm LAN1_SDAR G3 SMBD
LAN1_INT# R1117 0Ohm LAN1_INTR# G4 SMBALRT_N
JTCK F13 JTCK_LAN1 R1105 10KOhm
JTDI E12 JTDI_LAN1 R1106 10KOhm
JTDO D13 JTDO_LAN1 R1108 10KOhm +3.3V_LAN1
JTMS G13 JTMS_LAN1 R1109 10KOhm
E13 JRST_LAN1 R1111 10KOhm +3.3V_LAN1
33 PCH_LAN1_TX0 A14 PER_0_p
33 PCH_LAN1_TX#0 B14 PER_0_n
33 PCH_LAN1_TX1 A9 PER_1_p
33 PCH_LAN1_TX#1 B9 PER_1_n
33 PCH_LAN1_TX2 A8 PER_2_p
33 PCH_LAN1_TX#2 B8 PER_2_n
33 PCH_LAN1_TX3 A3 PER_3_p
33 PCH_LAN1_TX#3 B3 PER_3_n
X7R/+/-10%
PET_0_p A12 PCH_LAN1_RXC0 C768 0.1UF/16V PCH_LAN1_RX0 33
PET_0_n B12 PCH_LAN1_RXC#0 C769 0.1UF/16V PCH_LAN1_RX#0 33
PET_1_p A11 PCH_LAN1_RXC1 C969 0.1UF/16V PCH_LAN1_RX1 33
PET_1_n B11 PCH_LAN1_RXC#1 C970 0.1UF/16V PCH_LAN1_RX#1 33
PET_2_p A6 PCH_LAN1_RXC2 C971 0.1UF/16V PCH_LAN1_RX2 33
PET_2_n B6 PCH_LAN1_RXC#2 C972 0.1UF/16V PCH_LAN1_RX#2 33
PET_3_p A5 PCH_LAN1_RXC3 C973 0.1UF/16V PCH_LAN1_RX3 33
PET_3_n B5 PCH_LAN1_RXC#3 C974 0.1UF/16V PCH_LAN1_RX#3 33
I350-AM4
+3.3V_LAN1
LAN1_SEL0 R1104 4.7KOhm
LAN1_SEL1 R1107 4.7KOhm
LAN1_SEL2 R1110 4.7KOhm
LAN1_SEL3 R1112 4.7KOhm
LAN1_SCLR R1114 10KOhm
LAN1_SDAR R1116 10KOhm
LAN1_INTR# R1118 10KOhm
+3.3V_DUAL
+3.3V_LAN1
R1119 0Ohm R1206
R1120 0Ohm R1206
LAN1B
P16 SER0_p SET0_p R16
P15 SER0_n SET0_n R15
M16 SER1_p SET1_p N16
M15 SER1_n SET1_n N15
K16 SER2_p SET2_p L16
K15 SER2_n SET2_n L15
H16 SER3_p SET3_p J16
H15 SER3_n SET3_n J15
M13 SFP0_I2C_CLK SDP0_0 K1
J13 SFP0_I2C_DATA SDP0_1 K2 LAN1_SEL0
SDP0_2 K3
SDP0_3 K4
M14 SFP1_I2C_CLK SDP1_0 L1
N14 SFP1_I2C_DATA SDP1_1 L2 LAN1_SEL1
J14 SFP2_I2C_CLK SDP1_2 L3
H13 SFP2_I2C_DATA SDP1_3 L4
H14 SFP3_I2C_CLK SDP2_0 M1
G16 SFP3_I2C_DATA SDP2_1 M2 LAN1_SEL2
SDP2_2 M3
SDP2_3 M4
SDP3_0 N1
SDP3_1 N2 LAN1_SEL3
SDP3_2 N3
SDP3_3 N4
+3.3V_LAN1
R1140 4.7KOhm N13 SRDS_0_SIG_DET
R1141 4.7KOhm P14 SRDS_1_SIG_DET
R1142 4.7KOhm T15 SRDS_2_SIG_DET
R1143 4.7KOhm T16 SRDS_3_SIG_DET
I350-AM4
C776 20PF/50V
R1121 0Ohm
X8 25Mhz
C777 20PF/50V
R1122 0Ohm
C778 10PF/50V
LAN1D
LAN1_25M_OUT P2 XTAL_CLK_O
LAN1_25M_IN P1 XTAL_CLK_I
+3.3V_DUAL R1125 3.3KOhm D15 AUX_PWR
+3.3V_LAN1 R1127 3.3KOhm F14 LAN0_DIS_N
R1123 3.3KOhm E14 LAN1_DIS_N
R1128 3.3KOhm D14 LAN2_DIS_N
R1129 3.3KOhm C14 LAN3_DIS_N
R1130 3.3KOhm C4 DEVICE_OFF_N
/X LAN1_OFF# R1131 0Ohm
R1132 2.37KOHM 1% LAN1_SE_RSET K13 SE_RSET
R1135 1.5KOHM 1% LAN1_PE_TRIM0 A2 PE_TRIM1
LAN1_PE_TRIM1 A1 PE_TRIM2
+3.3V_LAN1 R1136 3.3KOhm D4 LAN_PWR_GOOD
+3.3V R1138 3.3KOhm B2 MAIN_PWR_OK
FLSH_CE_N C16 /X1 T260
FLSH_SCK B16 /X1 T261
FLSH_SI B15 /X1 T262
FLSH_SO C15 R1126 10KOhm
+3.3V_LAN1 R1124 3.3KOhm
EE_CS_N F16 LAN1_CS#
EE_DI E15 LAN1_DI
EE_DO F15 LAN1_DO
EE_SK E16 LAN1_SK
TSENSP R2 /X1 T263
TSENSZ T1 /X1 T264
GE_REXT3K T2 LAN1_GE_REXT3K R1133 3.01KOHM 1%
+3.3V_LAN1 R1134 3.3KOhm /X
RSVD_TX_TCLK R1 /X1 T265
RSVD_JTP8 G15 R1137 3.3KOhm /X
RSVD_TE_VSS C12 R1139 3.3KOhm
I350-AM4
+3.3V_LAN1
C779 0.1UF/25V
U68
+3.3V_LAN1
LAN1_CS# 1 S# VCC 8
LAN1_DO 2 Q HOLD# 7 R1144 3.3KOhm +3.3V_LAN1
+3.3V_LAN1 R1145 3.3KOhm 3 W# C 6 LAN1_SK
4 VSS D 5 LAN1_DI
M95256-WMN6TP
LAN1H
NCSI_ARB_IN C13
NCSI_ARB_OUT D12
NCSI_CLK_IN H1 50M_LAN1 R1814 10KOhm
NCSI_CLK_OUT H2
NCSI_CRS_DV H3 LAN1_NCSI_CRSDV R1818 10KOhm
NCSI_RXD_0 H4 LAN1_RXD0 R1820 10KOhm
NCSI_RXD_1 J1 LAN1_RXD1 R1819 10KOhm
NCSI_TXD_0 J3 LAN1_TXD0 R1817 10KOhm
NCSI_TXD_1 J4 LAN1_TXD1 R1815 10KOhm
NCSI_TX_EN J2 LAN1_TXEN R1816 10KOhm
I350-AM4

<Variant Name>

PEGATRON Title : 069 I350 LAN1
PEGATRON PROPRIETARY AND CONFIDENTIAL
PEGATRON CORPORATION Engineer: Larry_Chou

Size	Project Name	Rev
A3	CLCL-N	1.00

Date: Tuesday, November 27, 2018 Sheet 69 of 110

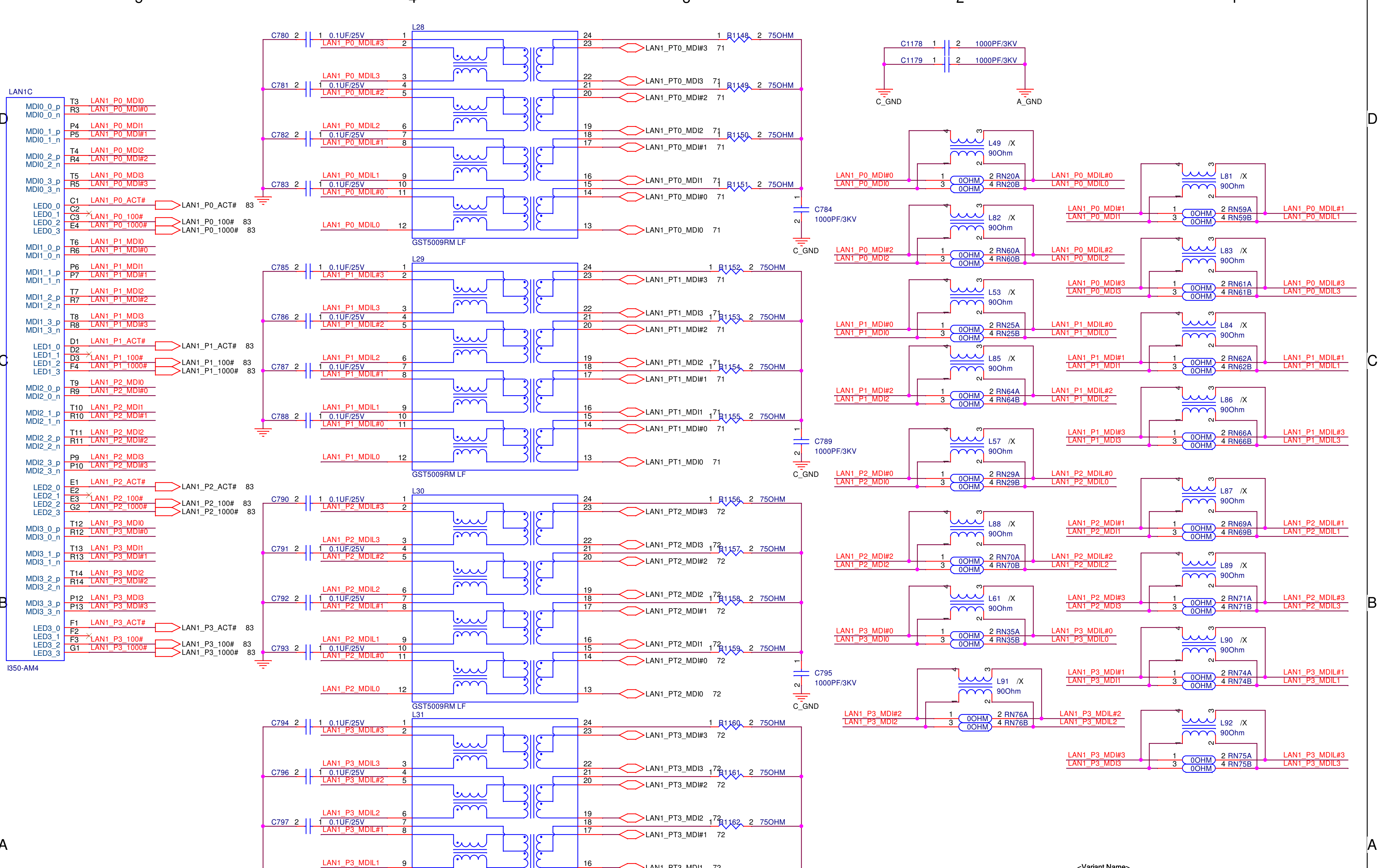
5
4
3
2
1
D
C
B
A
LAN1C
MDI0_0_p T3 LAN1_P0_MDI0
MDI0_0_n R3 LAN1_P0_MDI#0
MDI0_1_p P4 LAN1_P0_MDI1
MDI0_1_n P5 LAN1_P0_MDI#1
MDI0_2_p T4 LAN1_P0_MDI2
MDI0_2_n R4 LAN1_P0_MDI#2
MDI0_3_p T5 LAN1_P0_MDI3
MDI0_3_n R5 LAN1_P0_MDI#3
LED0_0 C1 LAN1_P0_ACT#
LED0_1 C2
LED0_2 C3 LAN1_P0_100#
LED0_3 E4 LAN1_P0_1000#
LAN1_P0_ACT# 83
LAN1_P0_100# 83
LAN1_P0_1000# 83
MDI1_0_p T6 LAN1_P1_MDI0
MDI1_0_n R6 LAN1_P1_MDI#0
MDI1_1_p P6 LAN1_P1_MDI1
MDI1_1_n P7 LAN1_P1_MDI#1
MDI1_2_p T7 LAN1_P1_MDI2
MDI1_2_n R7 LAN1_P1_MDI#2
MDI1_3_p T8 LAN1_P1_MDI3
MDI1_3_n R8 LAN1_P1_MDI#3
LED1_0 D1 LAN1_P1_ACT#
LED1_1 D2
LED1_2 D3 LAN1_P1_100#
LED1_3 F4 LAN1_P1_1000#
LAN1_P1_ACT# 83
LAN1_P1_100# 83
LAN1_P1_1000# 83
MDI2_0_p T9 LAN1_P2_MDI0
MDI2_0_n R9 LAN1_P2_MDI#0
MDI2_1_p T10 LAN1_P2_MDI1
MDI2_1_n R10 LAN1_P2_MDI#1
MDI2_2_p T11 LAN1_P2_MDI2
MDI2_2_n R11 LAN1_P2_MDI#2
MDI2_3_p P9 LAN1_P2_MDI3
MDI2_3_n P10 LAN1_P2_MDI#3
LED2_0 E1 LAN1_P2_ACT#
LED2_1 E2
LED2_2 E3 LAN1_P2_100#
LED2_3 G2 LAN1_P2_1000#
LAN1_P2_ACT# 83
LAN1_P2_100# 83
LAN1_P2_1000# 83
MDI3_0_p T12 LAN1_P3_MDI0
MDI3_0_n R12 LAN1_P3_MDI#0
MDI3_1_p T13 LAN1_P3_MDI1
MDI3_1_n R13 LAN1_P3_MDI#1
MDI3_2_p T14 LAN1_P3_MDI2
MDI3_2_n R14 LAN1_P3_MDI#2
MDI3_3_p P12 LAN1_P3_MDI3
MDI3_3_n P13 LAN1_P3_MDI#3
LED3_0 F1 LAN1_P3_ACT#
LED3_1 F2
LED3_2 F3 LAN1_P3_100#
LED3_3 G1 LAN1_P3_1000#
LAN1_P3_ACT# 83
LAN1_P3_100# 83
LAN1_P3_1000# 83
I350-AM4
L28
C780 2 1 0.1UF/25V 1 LAN1_P0_MDIL#3 2
LAN1_P0_MDIL3 3
C781 2 1 0.1UF/25V 4 LAN1_P0_MDIL#2 5
LAN1_P0_MDIL2 6
C782 2 1 0.1UF/25V 7 LAN1_P0_MDIL#1 8
LAN1_P0_MDIL1 9
C783 2 1 0.1UF/25V 10 LAN1_P0_MDIL#0 11
LAN1_P0_MDIL0 12
24 23 LAN1_PT0_MDI#3 71
22 21 20 LAN1_PT0_MDI3 71 LAN1_PT0_MDI#2 71
19 18 17 LAN1_PT0_MDI2 71 LAN1_PT0_MDI#1 71
16 15 14 LAN1_PT0_MDI1 71 LAN1_PT0_MDI#0 71
13 LAN1_PT0_MDI0 71
1 R1148 2 75OHM
1 R1149 2 75OHM
1 R1150 2 75OHM
1 R1151 2 75OHM
C784 1000PF/3KV 1 2
C_GND
GST5009RM LF
L29
C785 2 1 0.1UF/25V 1 LAN1_P1_MDIL#3 2
LAN1_P1_MDIL3 3
C786 2 1 0.1UF/25V 4 LAN1_P1_MDIL#2 5
LAN1_P1_MDIL2 6
C787 2 1 0.1UF/25V 7 LAN1_P1_MDIL#1 8
LAN1_P1_MDIL1 9
C788 2 1 0.1UF/25V 10 LAN1_P1_MDIL#0 11
LAN1_P1_MDIL0 12
24 23 LAN1_PT1_MDI#3 71
22 21 20 LAN1_PT1_MDI3 71 LAN1_PT1_MDI#2 71
19 18 17 LAN1_PT1_MDI2 71 LAN1_PT1_MDI#1 71
16 15 14 LAN1_PT1_MDI1 71 LAN1_PT1_MDI#0 71
13 LAN1_PT1_MDI0 71
1 R1152 2 75OHM
1 R1153 2 75OHM
1 R1154 2 75OHM
1 R1155 2 75OHM
C789 1000PF/3KV 1 2
C_GND
GST5009RM LF
L30
C790 2 1 0.1UF/25V 1 LAN1_P2_MDIL#3 2
LAN1_P2_MDIL3 3
C791 2 1 0.1UF/25V 4 LAN1_P2_MDIL#2 5
LAN1_P2_MDIL2 6
C792 2 1 0.1UF/25V 7 LAN1_P2_MDIL#1 8
LAN1_P2_MDIL1 9
C793 2 1 0.1UF/25V 10 LAN1_P2_MDIL#0 11
LAN1_P2_MDIL0 12
24 23 LAN1_PT2_MDI#3 72
22 21 20 LAN1_PT2_MDI3 72 LAN1_PT2_MDI#2 72
19 18 17 LAN1_PT2_MDI2 72 LAN1_PT2_MDI#1 72
16 15 14 LAN1_PT2_MDI1 72 LAN1_PT2_MDI#0 72
13 LAN1_PT2_MDI0 72
1 R1156 2 75OHM
1 R1157 2 75OHM
1 R1158 2 75OHM
1 R1159 2 75OHM
C795 1000PF/3KV 1 2
C_GND
GST5009RM LF
L31
C794 2 1 0.1UF/25V 1 LAN1_P3_MDIL#3 2
LAN1_P3_MDIL3 3
C796 2 1 0.1UF/25V 4 LAN1_P3_MDIL#2 5
LAN1_P3_MDIL2 6
C797 2 1 0.1UF/25V 7 LAN1_P3_MDIL#1 8
LAN1_P3_MDIL1 9
C798 2 1 0.1UF/25V 10 LAN1_P3_MDIL#0 11
LAN1_P3_MDIL0 12
24 23 LAN1_PT3_MDI#3 72
22 21 20 LAN1_PT3_MDI3 72 LAN1_PT3_MDI#2 72
19 18 17 LAN1_PT3_MDI2 72 LAN1_PT3_MDI#1 72
16 15 14 LAN1_PT3_MDI1 72 LAN1_PT3_MDI#0 72
13 LAN1_PT3_MDI0 72
1 R1160 2 75OHM
1 R1161 2 75OHM
1 R1162 2 75OHM
1 R1163 2 75OHM
C799 1000PF/3KV 1 2
C_GND
GST5009RM LF
C1178 1 2 1000PF/3KV
C1179 1 2 1000PF/3KV
C_GND
A_GND
L49 /X 90Ohm
LAN1_P0_MDI#0 LAN1_P0_MDI0 1 3 0OHM 0OHM 2 RN20A 4 RN20B LAN1_P0_MDIL#0 LAN1_P0_MDIL0
L81 /X 90Ohm
LAN1_P0_MDI#1 LAN1_P0_MDI1 1 3 0OHM 0OHM 2 RN59A 4 RN59B LAN1_P0_MDIL#1 LAN1_P0_MDIL1
L82 /X 90Ohm
LAN1_P0_MDI#2 LAN1_P0_MDI2 1 3 0OHM 0OHM 2 RN60A 4 RN60B LAN1_P0_MDIL#2 LAN1_P0_MDIL2
L83 /X 90Ohm
LAN1_P0_MDI#3 LAN1_P0_MDI3 1 3 0OHM 0OHM 2 RN61A 4 RN61B LAN1_P0_MDIL#3 LAN1_P0_MDIL3
L53 /X 90Ohm
LAN1_P1_MDI#0 LAN1_P1_MDI0 1 3 0OHM 0OHM 2 RN25A 4 RN25B LAN1_P1_MDIL#0 LAN1_P1_MDIL0
L84 /X 90Ohm
LAN1_P1_MDI#1 LAN1_P1_MDI1 1 3 0OHM 0OHM 2 RN62A 4 RN62B LAN1_P1_MDIL#1 LAN1_P1_MDIL1
L85 /X 90Ohm
LAN1_P1_MDI#2 LAN1_P1_MDI2 1 3 0OHM 0OHM 2 RN64A 4 RN64B LAN1_P1_MDIL#2 LAN1_P1_MDIL2
L86 /X 90Ohm
LAN1_P1_MDI#3 LAN1_P1_MDI3 1 3 0OHM 0OHM 2 RN66A 4 RN66B LAN1_P1_MDIL#3 LAN1_P1_MDIL3
L57 /X 90Ohm
LAN1_P2_MDI#0 LAN1_P2_MDI0 1 3 0OHM 0OHM 2 RN29A 4 RN29B LAN1_P2_MDIL#0 LAN1_P2_MDIL0
L87 /X 90Ohm
LAN1_P2_MDI#1 LAN1_P2_MDI1 1 3 0OHM 0OHM 2 RN69A 4 RN69B LAN1_P2_MDIL#1 LAN1_P2_MDIL1
L88 /X 90Ohm
LAN1_P2_MDI#2 LAN1_P2_MDI2 1 3 0OHM 0OHM 2 RN70A 4 RN70B LAN1_P2_MDIL#2 LAN1_P2_MDIL2
L89 /X 90Ohm
LAN1_P2_MDI#3 LAN1_P2_MDI3 1 3 0OHM 0OHM 2 RN71A 4 RN71B LAN1_P2_MDIL#3 LAN1_P2_MDIL3
L61 /X 90Ohm
LAN1_P3_MDI#0 LAN1_P3_MDI0 1 3 0OHM 0OHM 2 RN35A 4 RN35B LAN1_P3_MDIL#0 LAN1_P3_MDIL0
L90 /X 90Ohm
LAN1_P3_MDI#1 LAN1_P3_MDI1 1 3 0OHM 0OHM 2 RN74A 4 RN74B LAN1_P3_MDIL#1 LAN1_P3_MDIL1
L91 /X 90Ohm
LAN1_P3_MDI#2 LAN1_P3_MDI2 1 3 0OHM 0OHM 2 RN76A 4 RN76B LAN1_P3_MDIL#2 LAN1_P3_MDIL2
L92 /X 90Ohm
LAN1_P3_MDI#3 LAN1_P3_MDI3 1 3 0OHM 0OHM 2 RN75A 4 RN75B LAN1_P3_MDIL#3 LAN1_P3_MDIL3

<Variant Name>

PEGATRON Title : 070 I350 LAN1

PEGATRON PROPRIETARY AND CONFIDENTIAL

PEGATRON CORPORATION Engineer: *Larry_Chou*

Size	Project Name	Rev
A3	CLCL-N	1.00

Date: Tuesday, November 27, 2018 Sheet 70 of 110

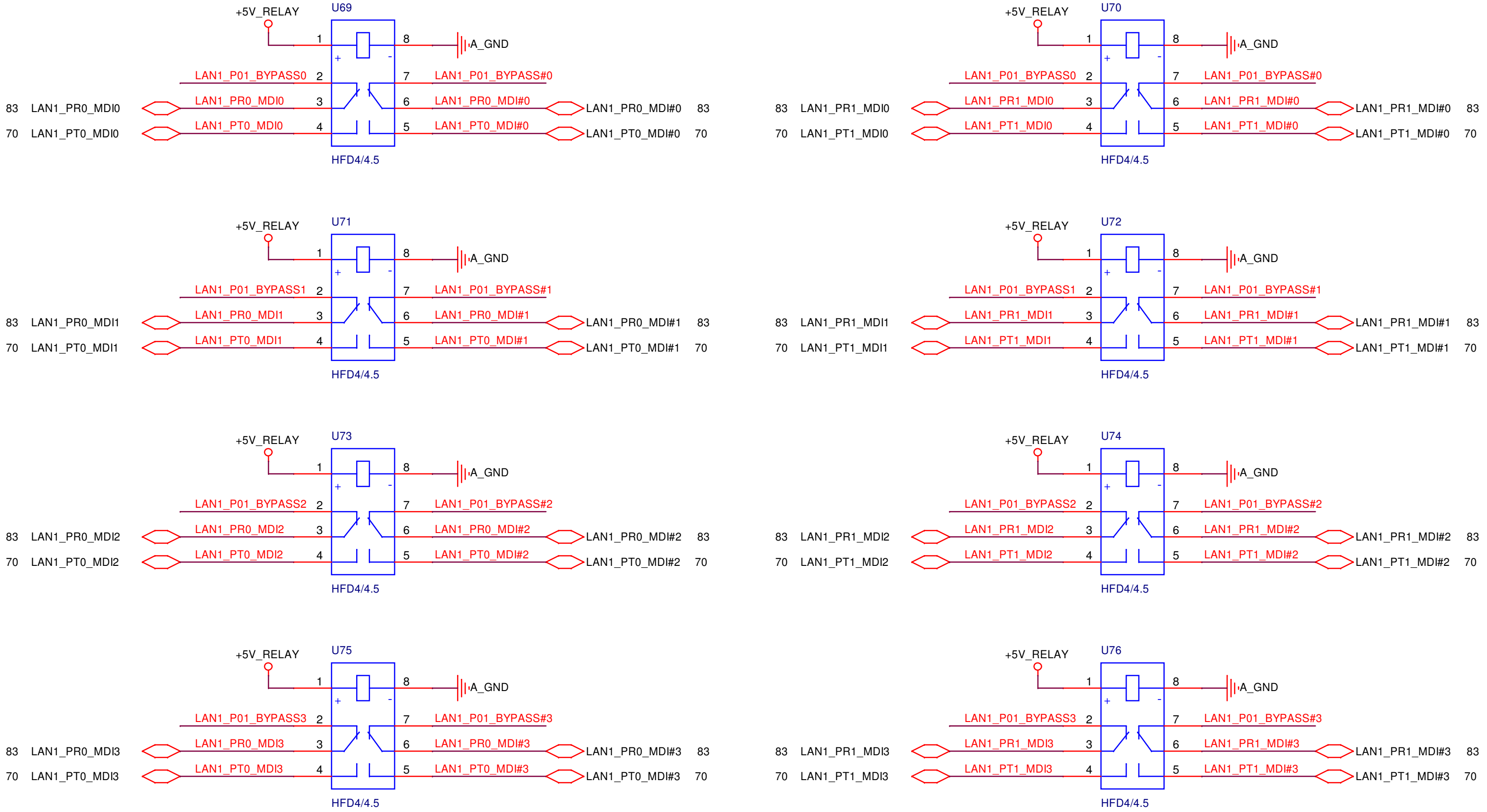
+5V_RELAY
U69
1
8
A_GND
+
-
LAN1_P01_BYPASS0 2
7 LAN1_P01_BYPASS#0
83 LAN1_PR0_MDI0
LAN1_PR0_MDI0 3
6 LAN1_PR0_MDI#0
LAN1_PR0_MDI#0 83
70 LAN1_PT0_MDI0
LAN1_PT0_MDI0 4
5 LAN1_PT0_MDI#0
LAN1_PT0_MDI#0 70
HFD4/4.5
+5V_RELAY
U70
1
8
A_GND
+
-
LAN1_P01_BYPASS0 2
7 LAN1_P01_BYPASS#0
83 LAN1_PR1_MDI0
LAN1_PR1_MDI0 3
6 LAN1_PR1_MDI#0
LAN1_PR1_MDI#0 83
70 LAN1_PT1_MDI0
LAN1_PT1_MDI0 4
5 LAN1_PT1_MDI#0
LAN1_PT1_MDI#0 70
HFD4/4.5
+5V_RELAY
U71
1
8
A_GND
+
-
LAN1_P01_BYPASS1 2
7 LAN1_P01_BYPASS#1
83 LAN1_PR0_MDI1
LAN1_PR0_MDI1 3
6 LAN1_PR0_MDI#1
LAN1_PR0_MDI#1 83
70 LAN1_PT0_MDI1
LAN1_PT0_MDI1 4
5 LAN1_PT0_MDI#1
LAN1_PT0_MDI#1 70
HFD4/4.5
+5V_RELAY
U72
1
8
A_GND
+
-
LAN1_P01_BYPASS1 2
7 LAN1_P01_BYPASS#1
83 LAN1_PR1_MDI1
LAN1_PR1_MDI1 3
6 LAN1_PR1_MDI#1
LAN1_PR1_MDI#1 83
70 LAN1_PT1_MDI1
LAN1_PT1_MDI1 4
5 LAN1_PT1_MDI#1
LAN1_PT1_MDI#1 70
HFD4/4.5
+5V_RELAY
U73
1
8
A_GND
+
-
LAN1_P01_BYPASS2 2
7 LAN1_P01_BYPASS#2
83 LAN1_PR0_MDI2
LAN1_PR0_MDI2 3
6 LAN1_PR0_MDI#2
LAN1_PR0_MDI#2 83
70 LAN1_PT0_MDI2
LAN1_PT0_MDI2 4
5 LAN1_PT0_MDI#2
LAN1_PT0_MDI#2 70
HFD4/4.5
+5V_RELAY
U74
1
8
A_GND
+
-
LAN1_P01_BYPASS2 2
7 LAN1_P01_BYPASS#2
83 LAN1_PR1_MDI2
LAN1_PR1_MDI2 3
6 LAN1_PR1_MDI#2
LAN1_PR1_MDI#2 83
70 LAN1_PT1_MDI2
LAN1_PT1_MDI2 4
5 LAN1_PT1_MDI#2
LAN1_PT1_MDI#2 70
HFD4/4.5
+5V_RELAY
U75
1
8
A_GND
+
-
LAN1_P01_BYPASS3 2
7 LAN1_P01_BYPASS#3
83 LAN1_PR0_MDI3
LAN1_PR0_MDI3 3
6 LAN1_PR0_MDI#3
LAN1_PR0_MDI#3 83
70 LAN1_PT0_MDI3
LAN1_PT0_MDI3 4
5 LAN1_PT0_MDI#3
LAN1_PT0_MDI#3 70
HFD4/4.5
+5V_RELAY
U76
1
8
A_GND
+
-
LAN1_P01_BYPASS3 2
7 LAN1_P01_BYPASS#3
83 LAN1_PR1_MDI3
LAN1_PR1_MDI3 3
6 LAN1_PR1_MDI#3
LAN1_PR1_MDI#3 83
70 LAN1_PT1_MDI3
LAN1_PT1_MDI3 4
5 LAN1_PT1_MDI#3
LAN1_PT1_MDI#3 70
HFD4/4.5

<Variant Name>

PEGATRON **Title :** 071 I350 LAN1 BYPA
PEGATRON PROPRIETARY AND CONFIDENTIAL
PEGATRON CORPORATION **Engineer:** *Larry_Chou*

Size	Project Name	Rev
A3	CLCL-N	1.00

Date: Tuesday, November 27, 2018 Sheet 71 of 110

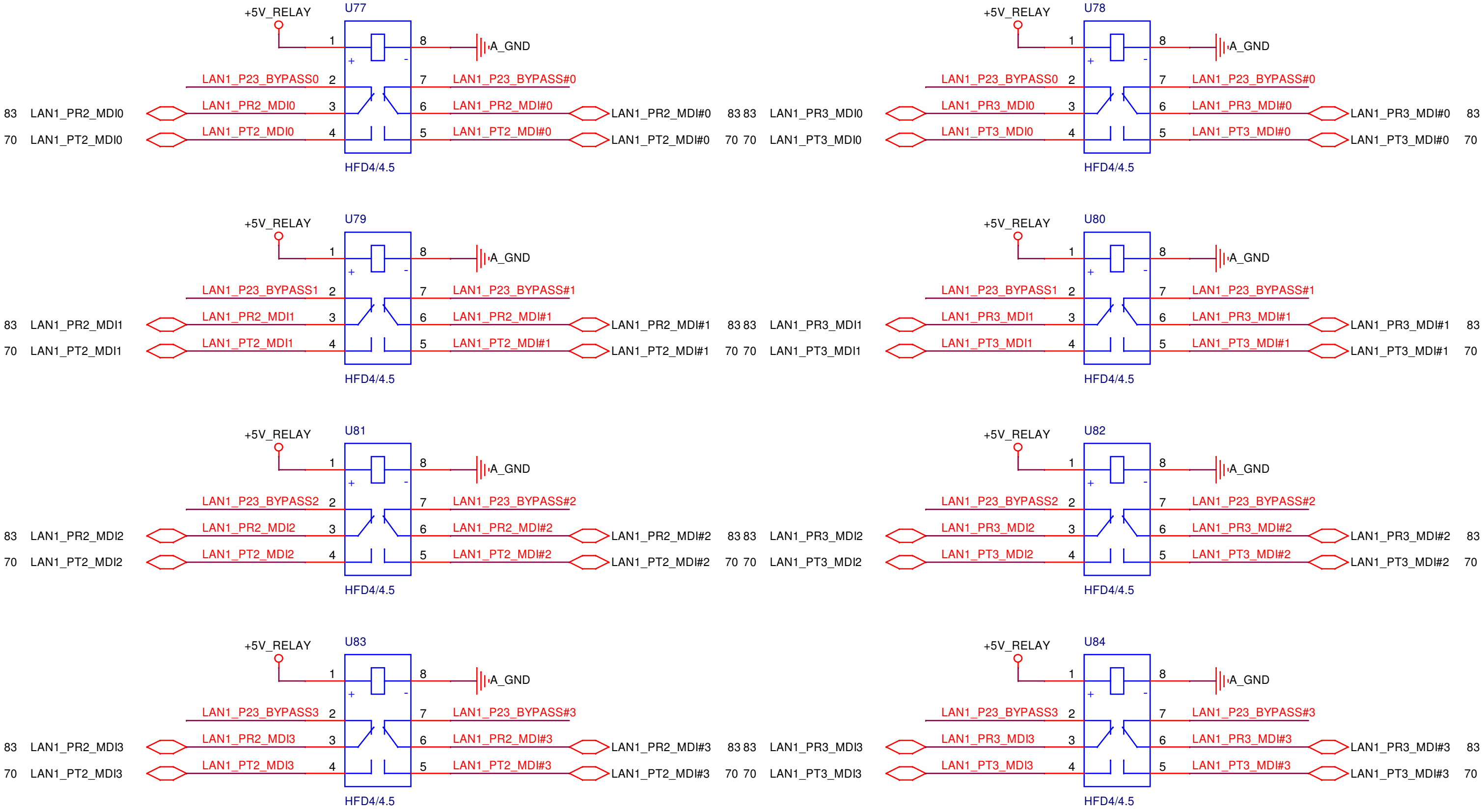
+5V_RELAY
U77
1
8
A_GND
LAN1_P23_BYPASS0 2
7 LAN1_P23_BYPASS#0
83 LAN1_PR2_MDI0
LAN1_PR2_MDI0 3
6 LAN1_PR2_MDI#0
LAN1_PR2_MDI#0 83
70 LAN1_PT2_MDI0
LAN1_PT2_MDI0 4
5 LAN1_PT2_MDI#0
LAN1_PT2_MDI#0 70
HFD4/4.5
+5V_RELAY
U78
83 LAN1_PR3_MDI0
70 LAN1_PT3_MDI0
LAN1_P23_BYPASS0 2
LAN1_PR3_MDI0 3
LAN1_PT3_MDI0 4
1
8
A_GND
7 LAN1_P23_BYPASS#0
6 LAN1_PR3_MDI#0
5 LAN1_PT3_MDI#0
LAN1_PR3_MDI#0 83
LAN1_PT3_MDI#0 70
HFD4/4.5
+5V_RELAY
U79
LAN1_P23_BYPASS1 2
7 LAN1_P23_BYPASS#1
83 LAN1_PR2_MDI1
LAN1_PR2_MDI1 3
6 LAN1_PR2_MDI#1
LAN1_PR2_MDI#1 83
70 LAN1_PT2_MDI1
LAN1_PT2_MDI1 4
5 LAN1_PT2_MDI#1
LAN1_PT2_MDI#1 70
HFD4/4.5
+5V_RELAY
U80
83 LAN1_PR3_MDI1
70 LAN1_PT3_MDI1
LAN1_P23_BYPASS1 2
LAN1_PR3_MDI1 3
LAN1_PT3_MDI1 4
7 LAN1_P23_BYPASS#1
6 LAN1_PR3_MDI#1
5 LAN1_PT3_MDI#1
LAN1_PR3_MDI#1 83
LAN1_PT3_MDI#1 70
HFD4/4.5
+5V_RELAY
U81
LAN1_P23_BYPASS2 2
7 LAN1_P23_BYPASS#2
83 LAN1_PR2_MDI2
LAN1_PR2_MDI2 3
6 LAN1_PR2_MDI#2
LAN1_PR2_MDI#2 83
70 LAN1_PT2_MDI2
LAN1_PT2_MDI2 4
5 LAN1_PT2_MDI#2
LAN1_PT2_MDI#2 70
HFD4/4.5
+5V_RELAY
U82
83 LAN1_PR3_MDI2
70 LAN1_PT3_MDI2
LAN1_P23_BYPASS2 2
LAN1_PR3_MDI2 3
LAN1_PT3_MDI2 4
7 LAN1_P23_BYPASS#2
6 LAN1_PR3_MDI#2
5 LAN1_PT3_MDI#2
LAN1_PR3_MDI#2 83
LAN1_PT3_MDI#2 70
HFD4/4.5
+5V_RELAY
U83
LAN1_P23_BYPASS3 2
7 LAN1_P23_BYPASS#3
83 LAN1_PR2_MDI3
LAN1_PR2_MDI3 3
6 LAN1_PR2_MDI#3
LAN1_PR2_MDI#3 83
70 LAN1_PT2_MDI3
LAN1_PT2_MDI3 4
5 LAN1_PT2_MDI#3
LAN1_PT2_MDI#3 70
HFD4/4.5
+5V_RELAY
U84
83 LAN1_PR3_MDI3
70 LAN1_PT3_MDI3
LAN1_P23_BYPASS3 2
LAN1_PR3_MDI3 3
LAN1_PT3_MDI3 4
7 LAN1_P23_BYPASS#3
6 LAN1_PR3_MDI#3
5 LAN1_PT3_MDI#3
LAN1_PR3_MDI#3 83
LAN1_PT3_MDI#3 70
HFD4/4.5

<Variant Name>

PEGATRON **Title :** **072 I350 LAN1 BYPA**
PEGATRON PROPRIETARY AND CONFIDENTIAL
PEGATRON CORPORATION **Engineer:** ***Larry_Chou***
Size A3 | Project Name **CLCL-N** | Rev 1.00
Date: Tuesday, November 27, 2018 Sheet 72 of 110

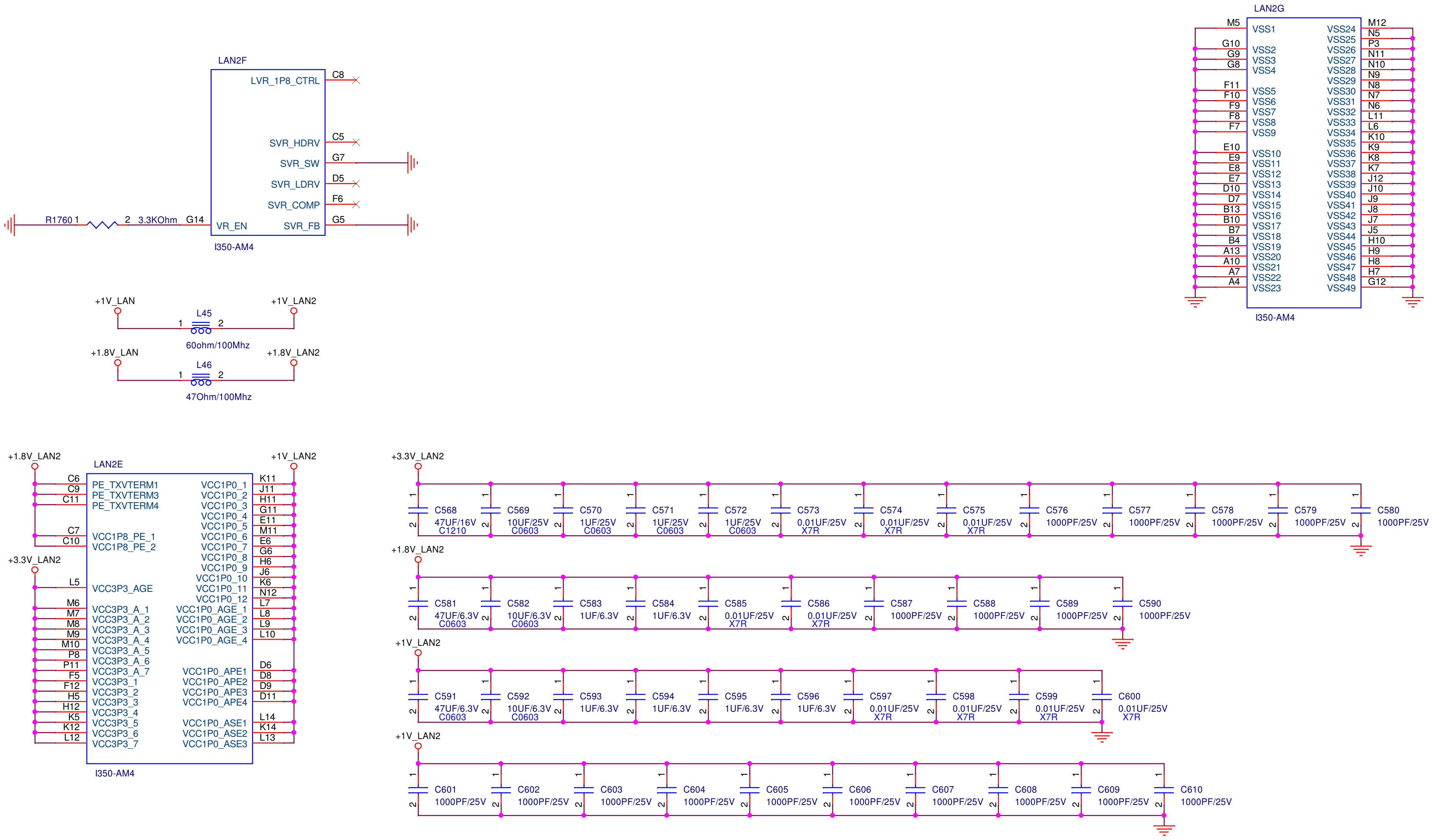
LAN2F
LVR_1P8_CTRL C8
SVR_HDRV C5
SVR_SW G7
SVR_LDRV D5
SVR_COMP F6
R1760 1 2 3.3KOhm G14 VR_EN
SVR_FB G5
I350-AM4
+1V_LAN
+1V_LAN2
L45 1 2
60ohm/100Mhz
+1.8V_LAN
+1.8V_LAN2
L46 1 2
47Ohm/100Mhz
LAN2G
M5 VSS1
G10 VSS2
G9 VSS3
G8 VSS4
F11 VSS5
F10 VSS6
F9 VSS7
F8 VSS8
F7 VSS9
E10 VSS10
E9 VSS11
E8 VSS12
E7 VSS13
D10 VSS14
D7 VSS15
B13 VSS16
B10 VSS17
B7 VSS18
B4 VSS19
A13 VSS20
A10 VSS21
A7 VSS22
A4 VSS23
VSS24 M12
VSS25 N5
VSS26 P3
VSS27 N11
VSS28 N10
VSS29 N9
VSS30 N8
VSS31 N7
VSS32 N6
VSS33 L11
VSS34 L6
VSS35 K10
VSS36 K9
VSS37 K8
VSS38 K7
VSS39 J12
VSS40 J10
VSS41 J9
VSS42 J8
VSS43 J7
VSS44 J5
VSS45 H10
VSS46 H9
VSS47 H8
VSS48 H7
VSS49 G12
I350-AM4
+1.8V_LAN2
LAN2E
C6 PE_TXVTERM1
C9 PE_TXVTERM3
C11 PE_TXVTERM4
C7 VCC1P8_PE_1
C10 VCC1P8_PE_2
+3.3V_LAN2
L5 VCC3P3_AGE
M6 VCC3P3_A_1
M7 VCC3P3_A_2
M8 VCC3P3_A_3
M9 VCC3P3_A_4
M10 VCC3P3_A_5
P8 VCC3P3_A_6
P11 VCC3P3_A_7
F5 VCC3P3_1
F12 VCC3P3_2
H5 VCC3P3_3
H12 VCC3P3_4
K5 VCC3P3_5
K12 VCC3P3_6
L12 VCC3P3_7
+1V_LAN2
VCC1P0_1 K11
VCC1P0_2 J11
VCC1P0_3 H11
VCC1P0_4 G11
VCC1P0_5 E11
VCC1P0_6 M11
VCC1P0_7 E6
VCC1P0_8 G6
VCC1P0_9 H6
VCC1P0_10 J6
VCC1P0_11 K6
VCC1P0_12 N12
VCC1P0_AGE_1 L7
VCC1P0_AGE_2 L8
VCC1P0_AGE_3 L9
VCC1P0_AGE_4 L10
VCC1P0_APE1 D6
VCC1P0_APE2 D8
VCC1P0_APE3 D9
VCC1P0_APE4 D11
VCC1P0_ASE1 L14
VCC1P0_ASE2 K14
VCC1P0_ASE3 L13
I350-AM4
+3.3V_LAN2
C568 47UF/16V C1210
C569 10UF/25V C0603
C570 1UF/25V C0603
C571 1UF/25V C0603
C572 1UF/25V C0603
C573 0.01UF/25V X7R
C574 0.01UF/25V X7R
C575 0.01UF/25V X7R
C576 1000PF/25V
C577 1000PF/25V
C578 1000PF/25V
C579 1000PF/25V
C580 1000PF/25V
+1.8V_LAN2
C581 47UF/6.3V C0603
C582 10UF/6.3V C0603
C583 1UF/6.3V
C584 1UF/6.3V
C585 0.01UF/25V X7R
C586 0.01UF/25V X7R
C587 1000PF/25V
C588 1000PF/25V
C589 1000PF/25V
C590 1000PF/25V
+1V_LAN2
C591 47UF/6.3V C0603
C592 10UF/6.3V C0603
C593 1UF/6.3V
C594 1UF/6.3V
C595 1UF/6.3V
C596 1UF/6.3V
C597 0.01UF/25V X7R
C598 0.01UF/25V X7R
C599 0.01UF/25V X7R
C600 0.01UF/25V X7R
+1V_LAN2
C601 1000PF/25V
C602 1000PF/25V
C603 1000PF/25V
C604 1000PF/25V
C605 1000PF/25V
C606 1000PF/25V
C607 1000PF/25V
C608 1000PF/25V
C609 1000PF/25V
C610 1000PF/25V

<Variant Name>

PEGATRON
PEGATRON PROPRIETARY AND CONFIDENTIAL

Title : 073 I350 LAN2

PEGATRON CORPORATION

Engineer: *Larry_Chou*

Size	Project Name	Rev
A3	CLCL-N	1.00

Date: Tuesday, November 27, 2018 Sheet 73 of 110

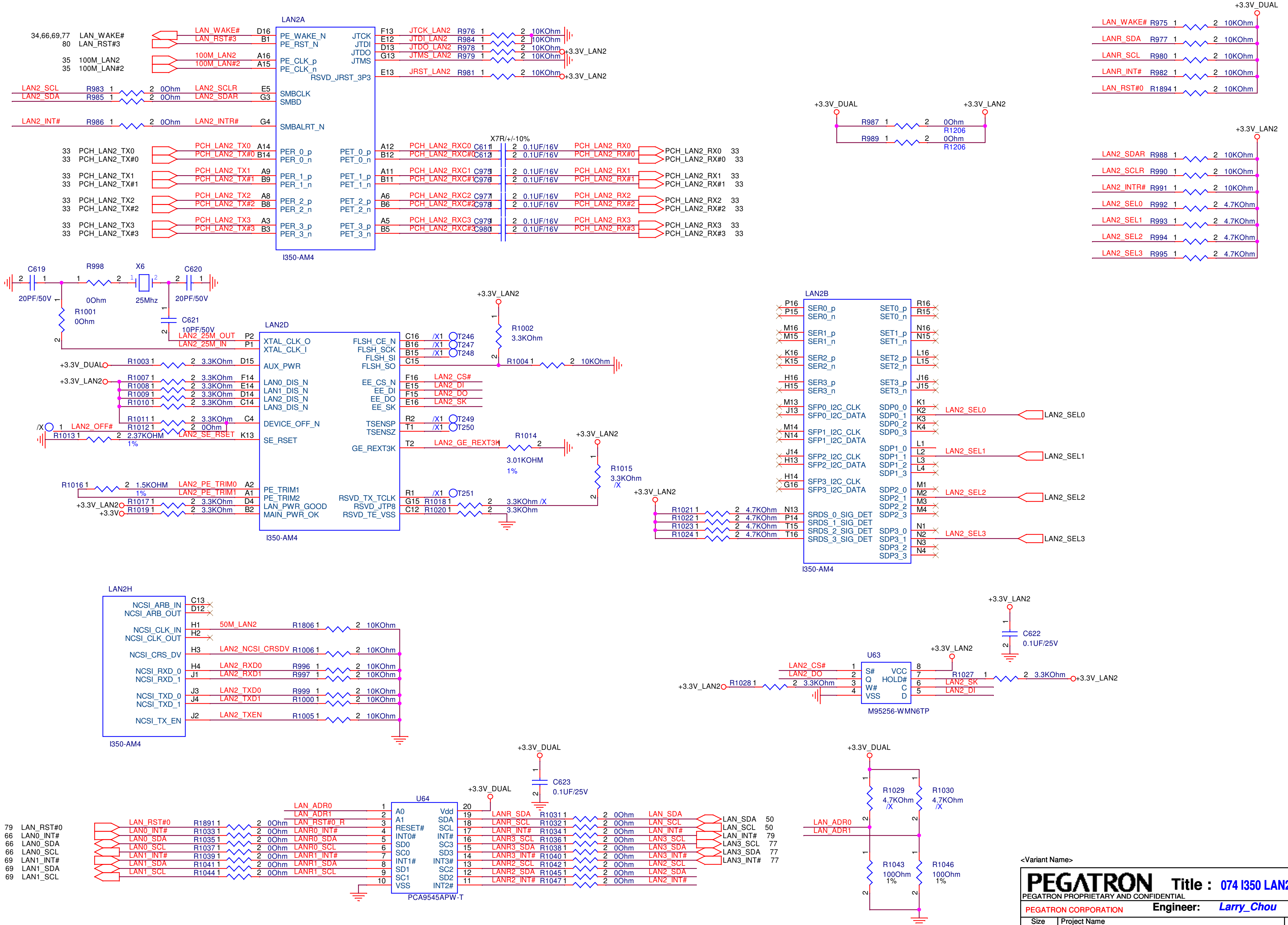
LAN2A
34,66,69,77 LAN_WAKE#
80 LAN_RST#3
35 100M_LAN2
35 100M_LAN#2
LAN_WAKE# D16
LAN_RST#3 B1
100M_LAN2 A16
100M_LAN#2 A15
PE_WAKE_N
PE_RST_N
PE_CLK_p
PE_CLK_n
JTCK
JTDI
JTDO
JTMS
RSVD_JRST_3P3
F13 JTCK_LAN2 R976 1 2 10KOhm
E12 JTDI_LAN2 R984 1 2 10KOhm
D13 JTDO_LAN2 R978 1 2 10KOhm
G13 JTMS_LAN2 R979 1 2 10KOhm
+3.3V_LAN2
E13 JRST_LAN2 R981 1 2 10KOhm
+3.3V_LAN2
LAN2_SCL R983 1 2 0Ohm LAN2_SCLR E5
LAN2_SDA R985 1 2 0Ohm LAN2_SDAR G3
SMBCLK
SMBD
LAN2_INT# R986 1 2 0Ohm LAN2_INTR# G4
SMBALRT_N
33 PCH_LAN2_TX0
33 PCH_LAN2_TX#0
33 PCH_LAN2_TX1
33 PCH_LAN2_TX#1
33 PCH_LAN2_TX2
33 PCH_LAN2_TX#2
33 PCH_LAN2_TX3
33 PCH_LAN2_TX#3
PCH_LAN2_TX0 A14
PCH_LAN2_TX#0 B14
PCH_LAN2_TX1 A9
PCH_LAN2_TX#1 B9
PCH_LAN2_TX2 A8
PCH_LAN2_TX#2 B8
PCH_LAN2_TX3 A3
PCH_LAN2_TX#3 B3
PER_0_p PER_0_n PER_1_p PER_1_n PER_2_p PER_2_n PER_3_p PER_3_n
PET_0_p PET_0_n PET_1_p PET_1_n PET_2_p PET_2_n PET_3_p PET_3_n
X7R/+/-10%
A12 PCH_LAN2_RXC0 C611 1 2 0.1UF/16V PCH_LAN2_RX0
B12 PCH_LAN2_RXC#0 C612 1 2 0.1UF/16V PCH_LAN2_RX#0
A11 PCH_LAN2_RXC1 C975 1 2 0.1UF/16V PCH_LAN2_RX1
B11 PCH_LAN2_RXC#1 C976 1 2 0.1UF/16V PCH_LAN2_RX#1
A6 PCH_LAN2_RXC2 C977 1 2 0.1UF/16V PCH_LAN2_RX2
B6 PCH_LAN2_RXC#2 C978 1 2 0.1UF/16V PCH_LAN2_RX#2
A5 PCH_LAN2_RXC3 C979 1 2 0.1UF/16V PCH_LAN2_RX3
B5 PCH_LAN2_RXC#3 C980 1 2 0.1UF/16V PCH_LAN2_RX#3
PCH_LAN2_RX0 33
PCH_LAN2_RX#0 33
PCH_LAN2_RX1 33
PCH_LAN2_RX#1 33
PCH_LAN2_RX2 33
PCH_LAN2_RX#2 33
PCH_LAN2_RX3 33
PCH_LAN2_RX#3 33
I350-AM4
+3.3V_DUAL
LAN_WAKE# R975 1 2 10KOhm
LANR_SDA R977 1 2 10KOhm
LANR_SCL R980 1 2 10KOhm
LANR_INT# R982 1 2 10KOhm
LAN_RST#0 R1894 1 2 10KOhm
+3.3V_DUAL
+3.3V_LAN2
R987 1 2 0Ohm R1206
R989 1 2 0Ohm R1206
+3.3V_LAN2
LAN2_SDAR R988 1 2 10KOhm
LAN2_SCLR R990 1 2 10KOhm
LAN2_INTR# R991 1 2 10KOhm
LAN2_SEL0 R992 1 2 4.7KOhm
LAN2_SEL1 R993 1 2 4.7KOhm
LAN2_SEL2 R994 1 2 4.7KOhm
LAN2_SEL3 R995 1 2 4.7KOhm
C619 2 1 20PF/50V
R998 1 2 0Ohm
X6 1 2 25Mhz
C620 2 1 20PF/50V
R1001 0Ohm
C621 10PF/50V
LAN2D
LAN2_25M_OUT P2
LAN2_25M_IN P1
XTAL_CLK_O
XTAL_CLK_I
+3.3V_DUAL R1003 1 2 3.3KOhm D15
AUX_PWR
+3.3V_LAN2 R1007 1 2 3.3KOhm F14
R1008 1 2 3.3KOhm E14
R1009 1 2 3.3KOhm D14
R1010 1 2 3.3KOhm C14
LAN0_DIS_N
LAN1_DIS_N
LAN2_DIS_N
LAN3_DIS_N
R1011 1 2 3.3KOhm C4
/X 1 LAN2_OFF# R1012 1 2 0Ohm
DEVICE_OFF_N
R1013 1 2 2.37KOHM 1% LAN2_SE_RSET K13
SE_RSET
R1016 1 2 1.5KOHM 1% LAN2_PE_TRIM0 A2
LAN2_PE_TRIM1 A1
+3.3V_LAN2 R1017 1 2 3.3KOhm D4
+3.3V R1019 1 2 3.3KOhm B2
PE_TRIM1
PE_TRIM2
LAN_PWR_GOOD
MAIN_PWR_OK
FLSH_CE_N
FLSH_SCK
FLSH_SI
FLSH_SO
C16 /X1 T246
B16 /X1 T247
B15 /X1 T248
C15
+3.3V_LAN2
R1002 3.3KOhm
R1004 1 2 10KOhm
EE_CS_N
EE_DI
EE_DO
EE_SK
F16 LAN2_CS#
E15 LAN2_DI
F15 LAN2_DO
E16 LAN2_SK
TSENSP
TSENSZ
R2 /X1 T249
T1 /X1 T250
GE_REXT3K
T2 LAN2_GE_REXT3K 1
R1014 3.01KOHM 1%
+3.3V_LAN2
R1015 3.3KOhm /X
RSVD_TX_TCLK
RSVD_JTP8
RSVD_TE_VSS
R1 /X1 T251
G15 R1018 1 2 3.3KOhm /X
C12 R1020 1 2 3.3KOhm
I350-AM4
LAN2B
P16 P15 SER0_p SER0_n
M16 M15 SER1_p SER1_n
K16 K15 SER2_p SER2_n
H16 H15 SER3_p SER3_n
M13 SFP0_I2C_CLK
J13 SFP0_I2C_DATA
M14 SFP1_I2C_CLK
N14 SFP1_I2C_DATA
J14 SFP2_I2C_CLK
H13 SFP2_I2C_DATA
H14 SFP3_I2C_CLK
G16 SFP3_I2C_DATA
SET0_p R16 SET0_n R15
SET1_p N16 SET1_n N15
SET2_p L16 SET2_n L15
SET3_p J16 SET3_n J15
SDP0_0 K1 SDP0_1 K2 SDP0_2 K3 SDP0_3 K4
SDP1_0 L1 SDP1_1 L2 SDP1_2 L3 SDP1_3 L4
SDP2_0 M1 SDP2_1 M2 SDP2_2 M3 SDP2_3 M4
SDP3_0 N1 SDP3_1 N2 SDP3_2 N3 SDP3_3 N4
LAN2_SEL0
LAN2_SEL1
LAN2_SEL2
LAN2_SEL3
+3.3V_LAN2
R1021 1 2 4.7KOhm N13 SRDS_0_SIG_DET
R1022 1 2 4.7KOhm P14 SRDS_1_SIG_DET
R1023 1 2 4.7KOhm T15 SRDS_2_SIG_DET
R1024 1 2 4.7KOhm T16 SRDS_3_SIG_DET
I350-AM4
LAN2H
NCSI_ARB_IN C13
NCSI_ARB_OUT D12
NCSI_CLK_IN H1 50M_LAN2 R1806 1 2 10KOhm
NCSI_CLK_OUT H2
NCSI_CRS_DV H3 LAN2_NCSI_CRSDV R1006 1 2 10KOhm
NCSI_RXD_0 H4 LAN2_RXD0 R996 1 2 10KOhm
NCSI_RXD_1 J1 LAN2_RXD1 R997 1 2 10KOhm
NCSI_TXD_0 J3 LAN2_TXD0 R999 1 2 10KOhm
NCSI_TXD_1 J4 LAN2_TXD1 R1000 1 2 10KOhm
NCSI_TX_EN J2 LAN2_TXEN R1005 1 2 10KOhm
I350-AM4
+3.3V_LAN2
C622 0.1UF/25V
U63
LAN2_CS# 1 S#
LAN2_DO 2 Q
+3.3V_LAN2 R1028 1 2 3.3KOhm 3 W#
4 VSS
VCC 8
HOLD# 7
C 6
D 5
+3.3V_LAN2
R1027 1 2 3.3KOhm +3.3V_LAN2
LAN2_SK
LAN2_DI
M95256-WMN6TP
+3.3V_DUAL
C623 0.1UF/25V
+3.3V_DUAL
U64
79 LAN_RST#0
66 LAN0_INT#
66 LAN0_SDA
66 LAN0_SCL
69 LAN1_INT#
69 LAN1_SDA
69 LAN1_SCL
LAN_RST#0 R1891 1 2 0Ohm LAN_RST#0_R 3
LAN0_INT# R1033 1 2 0Ohm LANR0_INT# 4
LAN0_SDA R1035 1 2 0Ohm LANR0_SDA 5
LAN0_SCL R1037 1 2 0Ohm LANR0_SCL 6
LAN1_INT# R1039 1 2 0Ohm LANR1_INT# 7
LAN1_SDA R1041 1 2 0Ohm LANR1_SDA 8
LAN1_SCL R1044 1 2 0Ohm LANR1_SCL 9
LAN_ADR0 1
LAN_ADR1 2
10
A0 A1 RESET# INT0# SD0 SC0 INT1# SD1 SC1 VSS
Vdd SDA SCL INT# SC3 SD3 INT3# SC2 SD2 INT2#
20
19 LANR_SDA R1031 1 2 0Ohm LAN_SDA
18 LANR_SCL R1032 1 2 0Ohm LAN_SCL
17 LANR_INT# R1034 1 2 0Ohm LAN_INT#
16 LANR3_SCL R1036 1 2 0Ohm LAN3_SCL
15 LANR3_SDA R1038 1 2 0Ohm LAN3_SDA
14 LANR3_INT# R1040 1 2 0Ohm LAN3_INT#
13 LANR2_SCL R1042 1 2 0Ohm LAN2_SCL
12 LANR2_SDA R1045 1 2 0Ohm LAN2_SDA
11 LANR2_INT# R1047 1 2 0Ohm LAN2_INT#
LAN_SDA 50
LAN_SCL 50
LAN_INT# 79
LAN3_SCL 77
LAN3_SDA 77
LAN3_INT# 77
PCA9545APW-T
+3.3V_DUAL
R1029 4.7KOhm /X
R1030 4.7KOhm /X
LAN_ADR0
LAN_ADR1
R1043 100Ohm 1%
R1046 100Ohm 1%

<Variant Name>

PEGATRON

PEGATRON PROPRIETARY AND CONFIDENTIAL

Title : 074 I350 LAN2

PEGATRON CORPORATION

Engineer: Larry_Chou

Size	Project Name	Rev
A3	CLCL-N	1.00

Date: Tuesday, November 27, 2018 Sheet 74 of 110

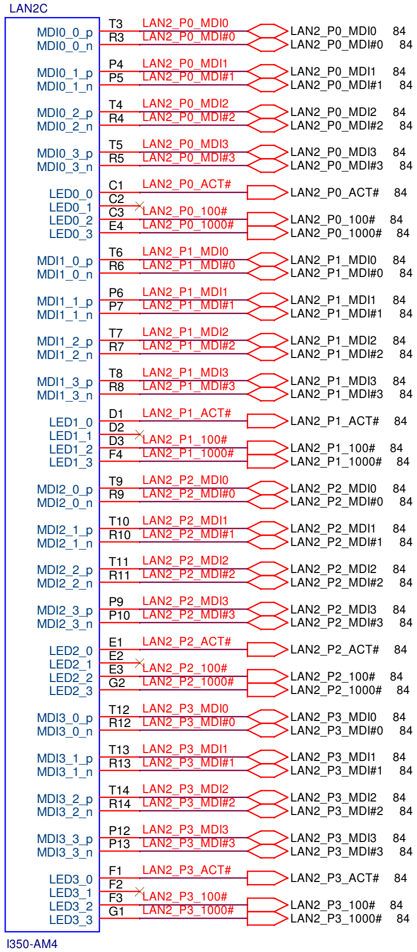
LAN2C
MDI0_0_p T3 LAN2_P0_MDI0 LAN2_P0_MDI0 84
MDI0_0_n R3 LAN2_P0_MDI#0 LAN2_P0_MDI#0 84
MDI0_1_p P4 LAN2_P0_MDI1 LAN2_P0_MDI1 84
MDI0_1_n P5 LAN2_P0_MDI#1 LAN2_P0_MDI#1 84
MDI0_2_p T4 LAN2_P0_MDI2 LAN2_P0_MDI2 84
MDI0_2_n R4 LAN2_P0_MDI#2 LAN2_P0_MDI#2 84
MDI0_3_p T5 LAN2_P0_MDI3 LAN2_P0_MDI3 84
MDI0_3_n R5 LAN2_P0_MDI#3 LAN2_P0_MDI#3 84
LED0_0 C1 LAN2_P0_ACT# LAN2_P0_ACT# 84
LED0_1 C2
LED0_2 C3 LAN2_P0_100# LAN2_P0_100# 84
LED0_3 E4 LAN2_P0_1000# LAN2_P0_1000# 84
MDI1_0_p T6 LAN2_P1_MDI0 LAN2_P1_MDI0 84
MDI1_0_n R6 LAN2_P1_MDI#0 LAN2_P1_MDI#0 84
MDI1_1_p P6 LAN2_P1_MDI1 LAN2_P1_MDI1 84
MDI1_1_n P7 LAN2_P1_MDI#1 LAN2_P1_MDI#1 84
MDI1_2_p T7 LAN2_P1_MDI2 LAN2_P1_MDI2 84
MDI1_2_n R7 LAN2_P1_MDI#2 LAN2_P1_MDI#2 84
MDI1_3_p T8 LAN2_P1_MDI3 LAN2_P1_MDI3 84
MDI1_3_n R8 LAN2_P1_MDI#3 LAN2_P1_MDI#3 84
LED1_0 D1 LAN2_P1_ACT# LAN2_P1_ACT# 84
LED1_1 D2
LED1_2 D3 LAN2_P1_100# LAN2_P1_100# 84
LED1_3 F4 LAN2_P1_1000# LAN2_P1_1000# 84
MDI2_0_p T9 LAN2_P2_MDI0 LAN2_P2_MDI0 84
MDI2_0_n R9 LAN2_P2_MDI#0 LAN2_P2_MDI#0 84
MDI2_1_p T10 LAN2_P2_MDI1 LAN2_P2_MDI1 84
MDI2_1_n R10 LAN2_P2_MDI#1 LAN2_P2_MDI#1 84
MDI2_2_p T11 LAN2_P2_MDI2 LAN2_P2_MDI2 84
MDI2_2_n R11 LAN2_P2_MDI#2 LAN2_P2_MDI#2 84
MDI2_3_p P9 LAN2_P2_MDI3 LAN2_P2_MDI3 84
MDI2_3_n P10 LAN2_P2_MDI#3 LAN2_P2_MDI#3 84
LED2_0 E1 LAN2_P2_ACT# LAN2_P2_ACT# 84
LED2_1 E2
LED2_2 E3 LAN2_P2_100# LAN2_P2_100# 84
LED2_3 G2 LAN2_P2_1000# LAN2_P2_1000# 84
MDI3_0_p T12 LAN2_P3_MDI0 LAN2_P3_MDI0 84
MDI3_0_n R12 LAN2_P3_MDI#0 LAN2_P3_MDI#0 84
MDI3_1_p T13 LAN2_P3_MDI1 LAN2_P3_MDI1 84
MDI3_1_n R13 LAN2_P3_MDI#1 LAN2_P3_MDI#1 84
MDI3_2_p T14 LAN2_P3_MDI2 LAN2_P3_MDI2 84
MDI3_2_n R14 LAN2_P3_MDI#2 LAN2_P3_MDI#2 84
MDI3_3_p P12 LAN2_P3_MDI3 LAN2_P3_MDI3 84
MDI3_3_n P13 LAN2_P3_MDI#3 LAN2_P3_MDI#3 84
LED3_0 F1 LAN2_P3_ACT# LAN2_P3_ACT# 84
LED3_1 F2
LED3_2 F3 LAN2_P3_100# LAN2_P3_100# 84
LED3_3 G1 LAN2_P3_1000# LAN2_P3_1000# 84
I350-AM4

<Variant Name>

PEGATRON
PEGATRON PROPRIETARY AND CONFIDENTIAL

Title : 075 I350 LAN2

PEGATRON CORPORATION

Engineer: *Larry_Chou*

Size	Project Name	Rev
A3	CLCL-N	1.00

Date: Tuesday, November 27, 2018 Sheet 75 of 110

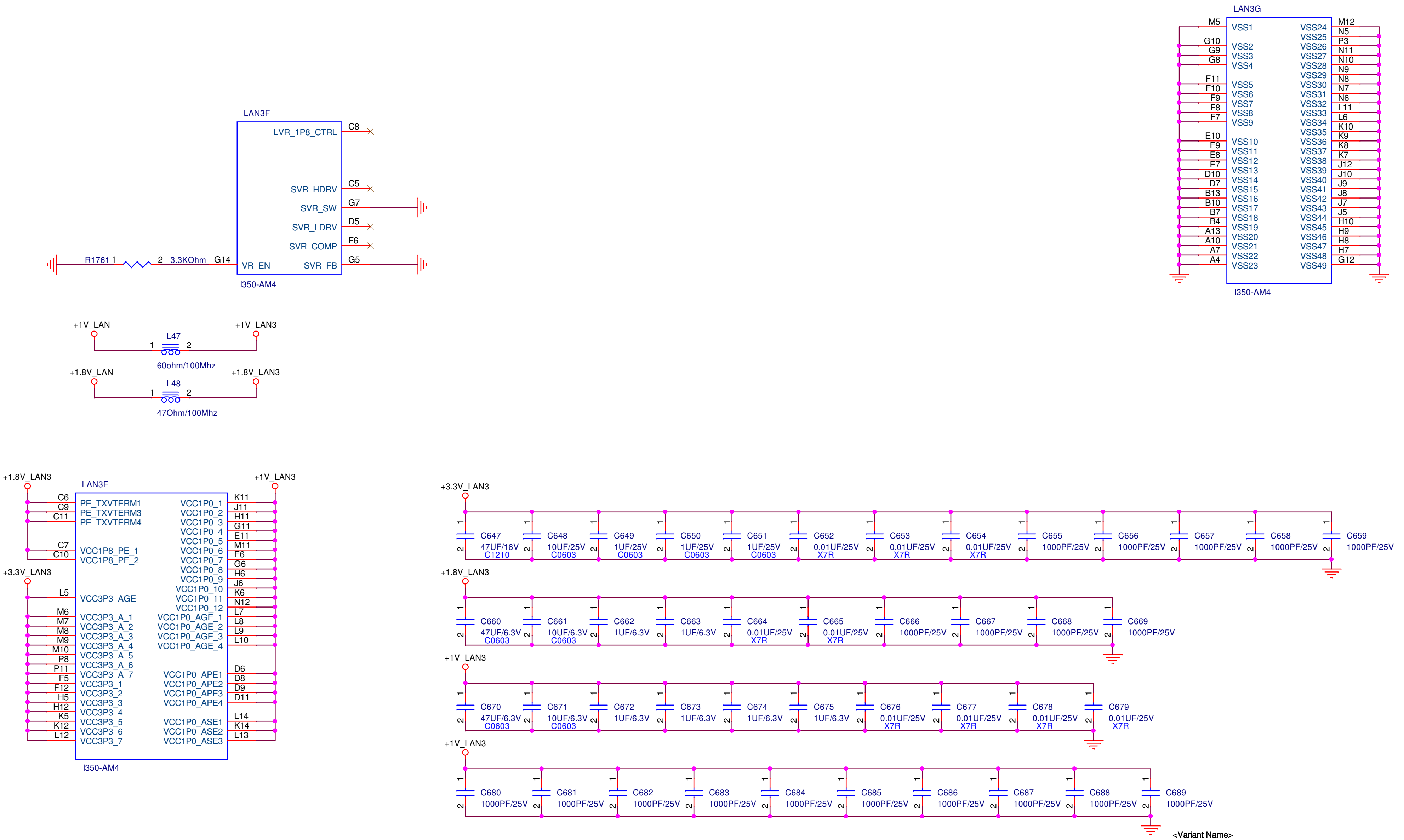
LAN3G
M5
VSS1
VSS2
VSS3
VSS4
VSS5
VSS6
VSS7
VSS8
VSS9
VSS10
VSS11
VSS12
VSS13
VSS14
VSS15
VSS16
VSS17
VSS18
VSS19
VSS20
VSS21
VSS22
VSS23
G10
G9
G8
F11
F10
F9
F8
F7
E10
E9
E8
E7
D10
D7
B13
B10
B7
B4
A13
A10
A7
A4
VSS24
VSS25
VSS26
VSS27
VSS28
VSS29
VSS30
VSS31
VSS32
VSS33
VSS34
VSS35
VSS36
VSS37
VSS38
VSS39
VSS40
VSS41
VSS42
VSS43
VSS44
VSS45
VSS46
VSS47
VSS48
VSS49
M12
N5
P3
N11
N10
N9
N8
N7
N6
L11
L6
K10
K9
K8
K7
J12
J10
J9
J8
J7
J5
H10
H9
H8
H7
G12
I350-AM4
LAN3F
LVR_1P8_CTRL
C8
SVR_HDRV
C5
SVR_SW
G7
SVR_LDRV
D5
SVR_COMP
F6
VR_EN
SVR_FB
G5
G14
R1761 1
2
3.3KOhm
I350-AM4
+1V_LAN
+1V_LAN3
L47
1
2
60ohm/100Mhz
+1.8V_LAN
+1.8V_LAN3
L48
1
2
47Ohm/100Mhz
+1.8V_LAN3
LAN3E
+1V_LAN3
C6
C9
C11
PE_TXVTERM1
PE_TXVTERM3
PE_TXVTERM4
C7
C10
VCC1P8_PE_1
VCC1P8_PE_2
+3.3V_LAN3
L5
VCC3P3_AGE
M6
M7
M8
M9
M10
P8
P11
F5
F12
H5
H12
K5
K12
L12
VCC3P3_A_1
VCC3P3_A_2
VCC3P3_A_3
VCC3P3_A_4
VCC3P3_A_5
VCC3P3_A_6
VCC3P3_A_7
VCC3P3_1
VCC3P3_2
VCC3P3_3
VCC3P3_4
VCC3P3_5
VCC3P3_6
VCC3P3_7
VCC1P0_1
VCC1P0_2
VCC1P0_3
VCC1P0_4
VCC1P0_5
VCC1P0_6
VCC1P0_7
VCC1P0_8
VCC1P0_9
VCC1P0_10
VCC1P0_11
VCC1P0_12
VCC1P0_AGE_1
VCC1P0_AGE_2
VCC1P0_AGE_3
VCC1P0_AGE_4
VCC1P0_APE1
VCC1P0_APE2
VCC1P0_APE3
VCC1P0_APE4
VCC1P0_ASE1
VCC1P0_ASE2
VCC1P0_ASE3
K11
J11
H11
G11
E11
M11
E6
G6
H6
J6
K6
N12
L7
L8
L9
L10
D6
D8
D9
D11
L14
K14
L13
I350-AM4
+3.3V_LAN3
C647 47UF/16V C1210
C648 10UF/25V C0603
C649 1UF/25V C0603
C650 1UF/25V C0603
C651 1UF/25V C0603
C652 0.01UF/25V X7R
C653 0.01UF/25V X7R
C654 0.01UF/25V X7R
C655 1000PF/25V
C656 1000PF/25V
C657 1000PF/25V
C658 1000PF/25V
C659 1000PF/25V
+1.8V_LAN3
C660 47UF/6.3V C0603
C661 10UF/6.3V C0603
C662 1UF/6.3V
C663 1UF/6.3V
C664 0.01UF/25V X7R
C665 0.01UF/25V X7R
C666 1000PF/25V
C667 1000PF/25V
C668 1000PF/25V
C669 1000PF/25V
+1V_LAN3
C670 47UF/6.3V C0603
C671 10UF/6.3V C0603
C672 1UF/6.3V
C673 1UF/6.3V
C674 1UF/6.3V
C675 1UF/6.3V
C676 0.01UF/25V X7R
C677 0.01UF/25V X7R
C678 0.01UF/25V X7R
C679 0.01UF/25V X7R
+1V_LAN3
C680 1000PF/25V
C681 1000PF/25V
C682 1000PF/25V
C683 1000PF/25V
C684 1000PF/25V
C685 1000PF/25V
C686 1000PF/25V
C687 1000PF/25V
C688 1000PF/25V
C689 1000PF/25V
1
2

<Variant Name>

PEGATRON **Title :** 076 I350 LAN3

PEGATRON PROPRIETARY AND CONFIDENTIAL

PEGATRON CORPORATION **Engineer:** *Larry_Chou*

Size	Project Name	Rev
A3	CLCL-N	1.00

Date: Tuesday, November 27, 2018 Sheet 76 of 110

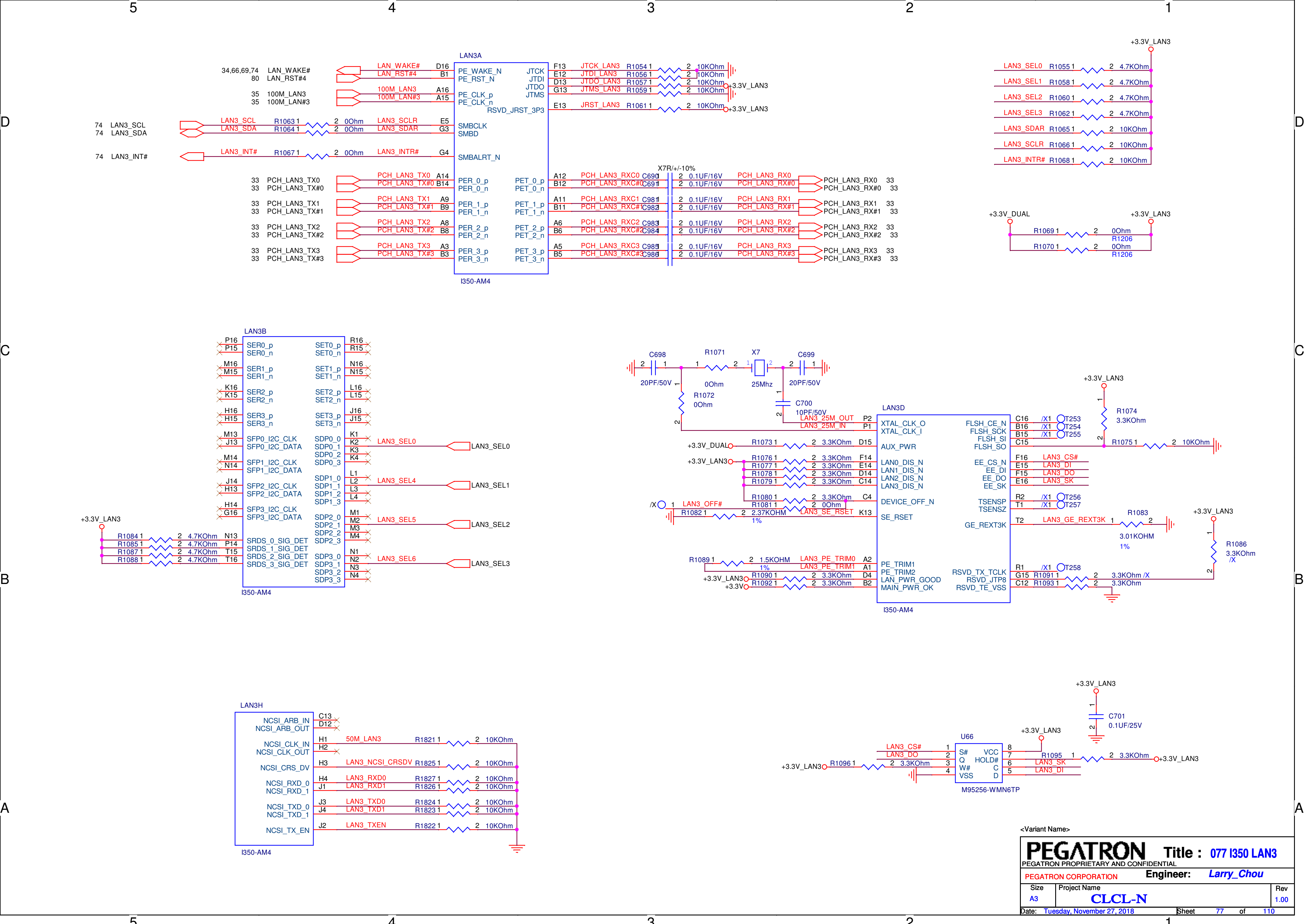
LAN3A
34,66,69,74 LAN_WAKE#
80 LAN_RST#4
35 100M_LAN3
35 100M_LAN#3
74 LAN3_SCL
74 LAN3_SDA
74 LAN3_INT#
LAN_WAKE# D16 PE_WAKE_N
LAN_RST#4 B1 PE_RST_N
100M_LAN3 A16 PE_CLK_p
100M_LAN#3 A15 PE_CLK_n
LAN3_SCL R1063 0Ohm LAN3_SCLR E5 SMBCLK
LAN3_SDA R1064 0Ohm LAN3_SDAR G3 SMBD
LAN3_INT# R1067 0Ohm LAN3_INTR# G4 SMBALRT_N
JTCK F13 JTCK_LAN3 R1054 10KOhm
JTDI E12 JTDI_LAN3 R1056 10KOhm
JTDO D13 JTDO_LAN3 R1057 10KOhm
JTMS G13 JTMS_LAN3 R1059 10KOhm +3.3V_LAN3
RSVD_JRST_3P3 E13 JRST_LAN3 R1061 10KOhm +3.3V_LAN3
33 PCH_LAN3_TX0 A14 PER_0_p
33 PCH_LAN3_TX#0 B14 PER_0_n
33 PCH_LAN3_TX1 A9 PER_1_p
33 PCH_LAN3_TX#1 B9 PER_1_n
33 PCH_LAN3_TX2 A8 PER_2_p
33 PCH_LAN3_TX#2 B8 PER_2_n
33 PCH_LAN3_TX3 A3 PER_3_p
33 PCH_LAN3_TX#3 B3 PER_3_n
X7R/+/-10%
PET_0_p A12 PCH_LAN3_RXC0 C690 0.1UF/16V PCH_LAN3_RX0 PCH_LAN3_RX0 33
PET_0_n B12 PCH_LAN3_RXC#0 C691 0.1UF/16V PCH_LAN3_RX#0 PCH_LAN3_RX#0 33
PET_1_p A11 PCH_LAN3_RXC1 C981 0.1UF/16V PCH_LAN3_RX1 PCH_LAN3_RX1 33
PET_1_n B11 PCH_LAN3_RXC#1 C982 0.1UF/16V PCH_LAN3_RX#1 PCH_LAN3_RX#1 33
PET_2_p A6 PCH_LAN3_RXC2 C983 0.1UF/16V PCH_LAN3_RX2 PCH_LAN3_RX2 33
PET_2_n B6 PCH_LAN3_RXC#2 C984 0.1UF/16V PCH_LAN3_RX#2 PCH_LAN3_RX#2 33
PET_3_p A5 PCH_LAN3_RXC3 C985 0.1UF/16V PCH_LAN3_RX3 PCH_LAN3_RX3 33
PET_3_n B5 PCH_LAN3_RXC#3 C986 0.1UF/16V PCH_LAN3_RX#3 PCH_LAN3_RX#3 33
I350-AM4
+3.3V_LAN3
LAN3_SEL0 R1055 4.7KOhm
LAN3_SEL1 R1058 4.7KOhm
LAN3_SEL2 R1060 4.7KOhm
LAN3_SEL3 R1062 4.7KOhm
LAN3_SDAR R1065 10KOhm
LAN3_SCLR R1066 10KOhm
LAN3_INTR# R1068 10KOhm
+3.3V_DUAL
+3.3V_LAN3
R1069 0Ohm R1206
R1070 0Ohm R1206
LAN3B
P16 P15 SER0_p SER0_n SET0_p SET0_n R16 R15
M16 M15 SER1_p SER1_n SET1_p SET1_n N16 N15
K16 K15 SER2_p SER2_n SET2_p SET2_n L16 L15
H16 H15 SER3_p SER3_n SET3_p SET3_n J16 J15
M13 J13 SFP0_I2C_CLK SFP0_I2C_DATA
M14 N14 SFP1_I2C_CLK SFP1_I2C_DATA
J14 H13 SFP2_I2C_CLK SFP2_I2C_DATA
H14 G16 SFP3_I2C_CLK SFP3_I2C_DATA
SDP0_0 K1 SDP0_1 K2 SDP0_2 K3 SDP0_3 K4
LAN3_SEL0 LAN3_SEL0
SDP1_0 L1 SDP1_1 L2 SDP1_2 L3 SDP1_3 L4
LAN3_SEL4 LAN3_SEL1
SDP2_0 M1 SDP2_1 M2 SDP2_2 M3 SDP2_3 M4
LAN3_SEL5 LAN3_SEL2
SDP3_0 N1 SDP3_1 N2 SDP3_2 N3 SDP3_3 N4
LAN3_SEL6 LAN3_SEL3
+3.3V_LAN3
R1084 4.7KOhm N13 SRDS_0_SIG_DET
R1085 4.7KOhm P14 SRDS_1_SIG_DET
R1087 4.7KOhm T15 SRDS_2_SIG_DET
R1088 4.7KOhm T16 SRDS_3_SIG_DET
I350-AM4
C698 20PF/50V
R1071 0Ohm
X7 25Mhz
C699 20PF/50V
R1072 0Ohm
C700 10PF/50V
LAN3D
LAN3_25M_OUT P2 XTAL_CLK_O
LAN3_25M_IN P1 XTAL_CLK_I
+3.3V_DUAL R1073 3.3KOhm D15 AUX_PWR
+3.3V_LAN3 R1076 3.3KOhm F14 LAN0_DIS_N
R1077 3.3KOhm E14 LAN1_DIS_N
R1078 3.3KOhm D14 LAN2_DIS_N
R1079 3.3KOhm C14 LAN3_DIS_N
R1080 3.3KOhm C4 DEVICE_OFF_N
/X LAN3_OFF# R1081 0Ohm
R1082 2.37KOHM 1% LAN3_SE_RSET K13 SE_RSET
R1089 1.5KOHM 1% LAN3_PE_TRIM0 A2 PE_TRIM1
LAN3_PE_TRIM1 A1 PE_TRIM2
+3.3V_LAN3 R1090 3.3KOhm D4 LAN_PWR_GOOD
+3.3V R1092 3.3KOhm B2 MAIN_PWR_OK
FLSH_CE_N C16 /X1 T253
FLSH_SCK B16 /X1 T254
FLSH_SI B15 /X1 T255
FLSH_SO C15 R1075 10KOhm
+3.3V_LAN3 R1074 3.3KOhm
EE_CS_N F16 LAN3_CS#
EE_DI E15 LAN3_DI
EE_DO F15 LAN3_DO
EE_SK E16 LAN3_SK
TSENSP R2 /X1 T256
TSENSZ T1 /X1 T257
GE_REXT3K T2 LAN3_GE_REXT3K R1083 3.01KOHM 1%
+3.3V_LAN3 R1086 3.3KOhm /X
RSVD_TX_TCLK R1 /X1 T258
RSVD_JTP8 G15 R1091 3.3KOhm /X
RSVD_TE_VSS C12 R1093 3.3KOhm
I350-AM4
LAN3H
NCSI_ARB_IN C13
NCSI_ARB_OUT D12
NCSI_CLK_IN H1 50M_LAN3 R1821 10KOhm
NCSI_CLK_OUT H2
NCSI_CRS_DV H3 LAN3_NCSI_CRSDV R1825 10KOhm
NCSI_RXD_0 H4 LAN3_RXD0 R1827 10KOhm
NCSI_RXD_1 J1 LAN3_RXD1 R1826 10KOhm
NCSI_TXD_0 J3 LAN3_TXD0 R1824 10KOhm
NCSI_TXD_1 J4 LAN3_TXD1 R1823 10KOhm
NCSI_TX_EN J2 LAN3_TXEN R1822 10KOhm
I350-AM4
+3.3V_LAN3
C701 0.1UF/25V
+3.3V_LAN3
U66
LAN3_CS# 1 S# VCC 8
LAN3_DO 2 Q HOLD# 7 R1095 3.3KOhm +3.3V_LAN3
+3.3V_LAN3 R1096 3.3KOhm 3 W# C 6 LAN3_SK
4 VSS D 5 LAN3_DI
M95256-WMN6TP
5 4 3 2 1
D C B A

<Variant Name>

PEGATRON

Title : 077 I350 LAN3

PEGATRON PROPRIETARY AND CONFIDENTIAL

PEGATRON CORPORATION

Engineer: *Larry_Chou*

Size	Project Name	Rev
A3	CLCL-N	1.00

Date: Tuesday, November 27, 2018 Sheet 77 of 110

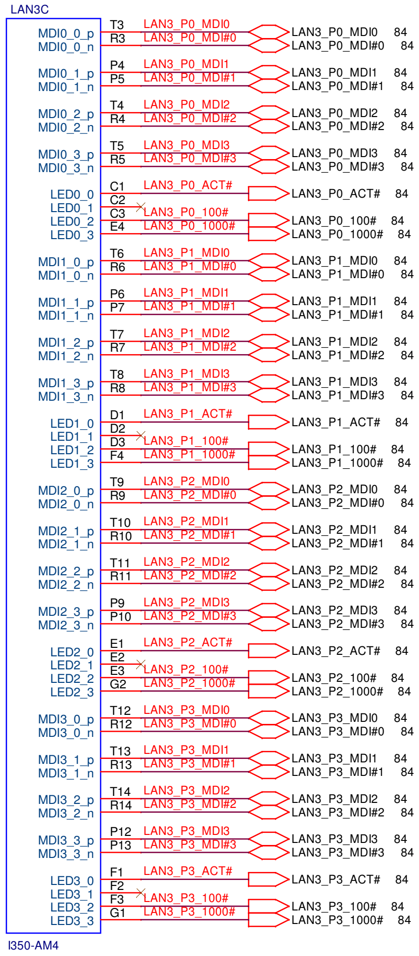
LAN3C
MDI0_0_p T3 LAN3_P0_MDI0 LAN3_P0_MDI0 84
MDI0_0_n R3 LAN3_P0_MDI#0 LAN3_P0_MDI#0 84
MDI0_1_p P4 LAN3_P0_MDI1 LAN3_P0_MDI1 84
MDI0_1_n P5 LAN3_P0_MDI#1 LAN3_P0_MDI#1 84
MDI0_2_p T4 LAN3_P0_MDI2 LAN3_P0_MDI2 84
MDI0_2_n R4 LAN3_P0_MDI#2 LAN3_P0_MDI#2 84
MDI0_3_p T5 LAN3_P0_MDI3 LAN3_P0_MDI3 84
MDI0_3_n R5 LAN3_P0_MDI#3 LAN3_P0_MDI#3 84
LED0_0 C1 LAN3_P0_ACT# LAN3_P0_ACT# 84
LED0_1 C2
LED0_2 C3 LAN3_P0_100# LAN3_P0_100# 84
LED0_3 E4 LAN3_P0_1000# LAN3_P0_1000# 84
MDI1_0_p T6 LAN3_P1_MDI0 LAN3_P1_MDI0 84
MDI1_0_n R6 LAN3_P1_MDI#0 LAN3_P1_MDI#0 84
MDI1_1_p P6 LAN3_P1_MDI1 LAN3_P1_MDI1 84
MDI1_1_n P7 LAN3_P1_MDI#1 LAN3_P1_MDI#1 84
MDI1_2_p T7 LAN3_P1_MDI2 LAN3_P1_MDI2 84
MDI1_2_n R7 LAN3_P1_MDI#2 LAN3_P1_MDI#2 84
MDI1_3_p T8 LAN3_P1_MDI3 LAN3_P1_MDI3 84
MDI1_3_n R8 LAN3_P1_MDI#3 LAN3_P1_MDI#3 84
LED1_0 D1 LAN3_P1_ACT# LAN3_P1_ACT# 84
LED1_1 D2
LED1_2 D3 LAN3_P1_100# LAN3_P1_100# 84
LED1_3 F4 LAN3_P1_1000# LAN3_P1_1000# 84
MDI2_0_p T9 LAN3_P2_MDI0 LAN3_P2_MDI0 84
MDI2_0_n R9 LAN3_P2_MDI#0 LAN3_P2_MDI#0 84
MDI2_1_p T10 LAN3_P2_MDI1 LAN3_P2_MDI1 84
MDI2_1_n R10 LAN3_P2_MDI#1 LAN3_P2_MDI#1 84
MDI2_2_p T11 LAN3_P2_MDI2 LAN3_P2_MDI2 84
MDI2_2_n R11 LAN3_P2_MDI#2 LAN3_P2_MDI#2 84
MDI2_3_p P9 LAN3_P2_MDI3 LAN3_P2_MDI3 84
MDI2_3_n P10 LAN3_P2_MDI#3 LAN3_P2_MDI#3 84
LED2_0 E1 LAN3_P2_ACT# LAN3_P2_ACT# 84
LED2_1 E2
LED2_2 E3 LAN3_P2_100# LAN3_P2_100# 84
LED2_3 G2 LAN3_P2_1000# LAN3_P2_1000# 84
MDI3_0_p T12 LAN3_P3_MDI0 LAN3_P3_MDI0 84
MDI3_0_n R12 LAN3_P3_MDI#0 LAN3_P3_MDI#0 84
MDI3_1_p T13 LAN3_P3_MDI1 LAN3_P3_MDI1 84
MDI3_1_n R13 LAN3_P3_MDI#1 LAN3_P3_MDI#1 84
MDI3_2_p T14 LAN3_P3_MDI2 LAN3_P3_MDI2 84
MDI3_2_n R14 LAN3_P3_MDI#2 LAN3_P3_MDI#2 84
MDI3_3_p P12 LAN3_P3_MDI3 LAN3_P3_MDI3 84
MDI3_3_n P13 LAN3_P3_MDI#3 LAN3_P3_MDI#3 84
LED3_0 F1 LAN3_P3_ACT# LAN3_P3_ACT# 84
LED3_1 F2
LED3_2 F3 LAN3_P3_100# LAN3_P3_100# 84
LED3_3 G1 LAN3_P3_1000# LAN3_P3_1000# 84
I350-AM4

<Variant Name>

PEGATRON **Title :** **078 I350 LAN3**
PEGATRON PROPRIETARY AND CONFIDENTIAL
PEGATRON CORPORATION **Engineer:** ***Larry_Chou***

Size	Project Name	Rev
A3	**CLCL-N**	1.00

Date: Tuesday, November 27, 2018 Sheet 78 of 110

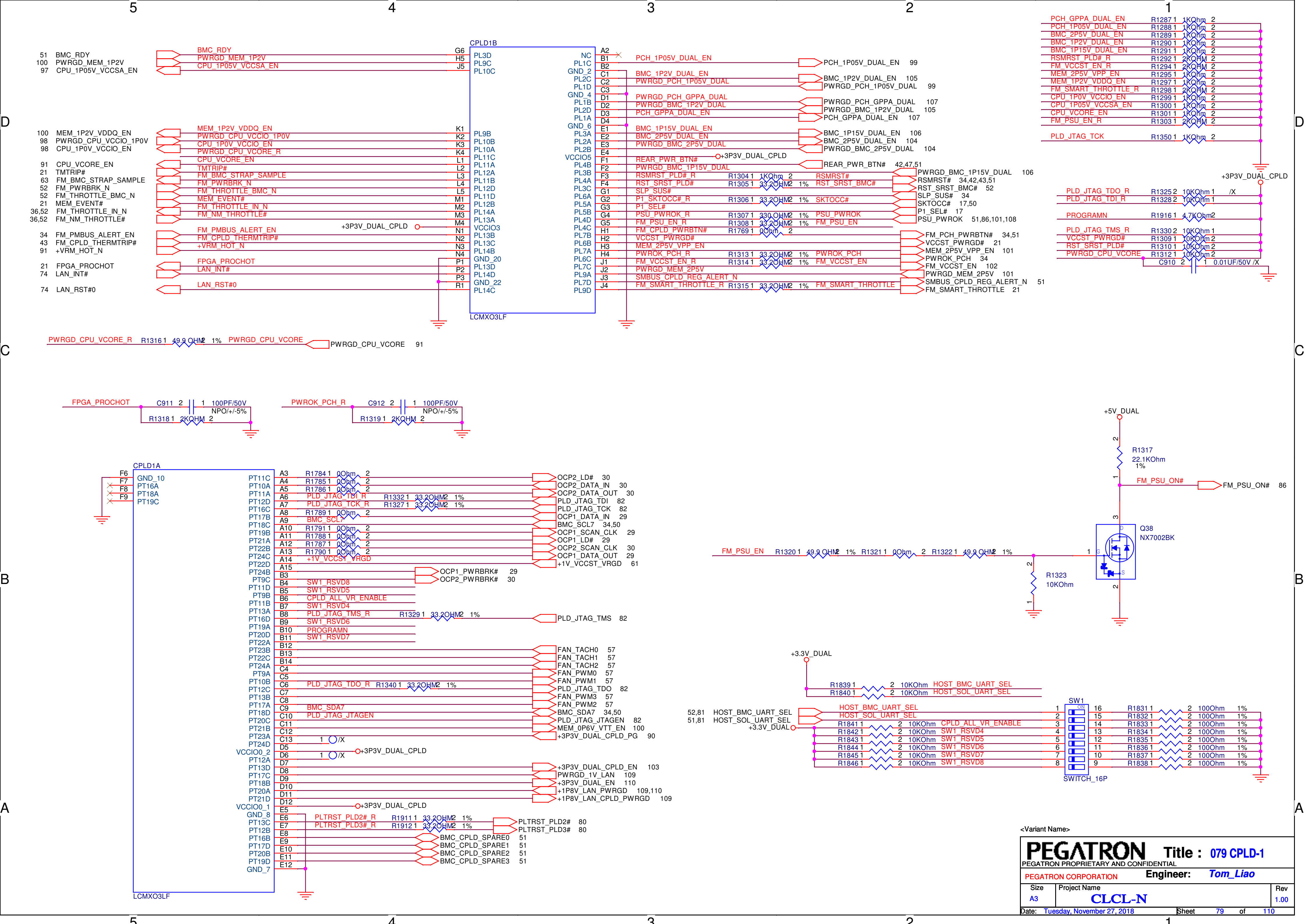
5
4
3
2
1
D
C
B
A
CPLD1B
LCMXO3LF
51 BMC_RDY
100 PWRGD_MEM_1P2V
97 CPU_1P05V_VCCSA_EN
BMC_RDY G6 PL3D
PWRGD_MEM_1P2V H5 PL9C
CPU_1P05V_VCCSA_EN J5 PL10C
100 MEM_1P2V_VDDQ_EN
98 PWRGD_CPU_VCCIO_1P0V
98 CPU_1P0V_VCCIO_EN
91 CPU_VCORE_EN
21 TMTRIP#
63 FM_BMC_STRAP_SAMPLE
52 FM_PWRBRK_N
52 FM_THROTTLE_BMC_N
21 MEM_EVENT#
36,52 FM_THROTTLE_IN_N
36,52 FM_NM_THROTTLE#
34 FM_PMBUS_ALERT_EN
43 FM_CPLD_THERMTRIP#
91 +VRM_HOT_N
21 FPGA_PROCHOT
74 LAN_INT#
74 LAN_RST#0
MEM_1P2V_VDDQ_EN K1 PL9B
PWRGD_CPU_VCCIO_1P0V K2 PL10B
CPU_1P0V_VCCIO_EN K3 PL10A
PWRGD_CPU_VCORE_R K4 PL11C
CPU_VCORE_EN L1 PL11A
TMTRIP# L2 PL12A
FM_BMC_STRAP_SAMPLE L3 PL11B
FM_PWRBRK_N L4 PL12D
FM_THROTTLE_BMC_N L5 PL11D
MEM_EVENT# M1 PL12B
FM_THROTTLE_IN_N M2 PL14A
FM_NM_THROTTLE# M3 PL13A
+3P3V_DUAL_CPLD M4 VCCIO3
FM_PMBUS_ALERT_EN N1 PL13B
FM_CPLD_THERMTRIP# N2 PL13C
+VRM_HOT_N N3 PL14B
N4 GND_20
FPGA_PROCHOT P1 PL13D
LAN_INT# P2 PL14D
P3 GND_22
LAN_RST#0 R1 PL14C
NC A2
PL1C B1 PCH_1P05V_DUAL_EN
GND_2 B2
PL2C C1 BMC_1P2V_DUAL_EN
PL1D C2 PWRGD_PCH_1P05V_DUAL
GND_4 C3
PL1B D1 PWRGD_PCH_GPPA_DUAL
PL2D D2 PWRGD_BMC_1P2V_DUAL
PL1A D3 PCH_GPPA_DUAL_EN
GND_6 D4
PL3A E1 BMC_1P15V_DUAL_EN
PL2A E2 BMC_2P5V_DUAL_EN
PL2B E3 PWRGD_BMC_2P5V_DUAL
VCCIO5 E4 +3P3V_DUAL_CPLD
PL4B F1 REAR_PWR_BTN#
PL3B F2 PWRGD_BMC_1P15V_DUAL
PL4A F3 RSMRST_PLD#_R R1304 1 1KOhm 2 RSMRST#
PL3C F4 RST_SRST_PLD# R1305 1 33.2OHM 2 1% RST_SRST_BMC#
PL6A G1 SLP_SUS#
PL5A G2 P1_SKTOCC#_R R1306 1 33.2OHM 2 1% SKTOCC#
PL5B G3 P1_SEL#
PL4D G4 PSU_PWROK_R R1307 1 330 OHM 2 1% PSU_PWROK
PL4C G5 FM_PSU_EN_R R1308 1 33.2OHM 2 1% FM_PSU_EN
PL7B H1 FM_CPLD_PWRBTN# R1769 1 0Ohm 2
PL6B H2 VCCST_PWRGD#
PL7A H3 MEM_2P5V_VPP_EN
PL6C H4 PWROK_PCH_R R1313 1 33.2OHM 2 1% PWROK_PCH
PL7C J1 FM_VCCST_EN_R R1314 1 33.2OHM 2 1% FM_VCCST_EN
PL9A J2 PWRGD_MEM_2P5V
PL7D J3 SMBUS_CPLD_REG_ALERT_N
PL9D J4 FM_SMART_THROTTLE_R R1315 1 33.2OHM 2 1% FM_SMART_THROTTLE
PCH_1P05V_DUAL_EN 99
BMC_1P2V_DUAL_EN 105
PWRGD_PCH_1P05V_DUAL 99
PWRGD_PCH_GPPA_DUAL 107
PWRGD_BMC_1P2V_DUAL 105
PCH_GPPA_DUAL_EN 107
BMC_1P15V_DUAL_EN 106
BMC_2P5V_DUAL_EN 104
PWRGD_BMC_2P5V_DUAL 104
REAR_PWR_BTN# 42,47,51
PWRGD_BMC_1P15V_DUAL 106
RSMRST# 34,42,43,51
RST_SRST_BMC# 52
SLP_SUS# 34
SKTOCC# 17,50
P1_SEL# 17
PSU_PWROK 51,86,101,108
FM_PCH_PWRBTN# 34,51
VCCST_PWRGD# 21
MEM_2P5V_VPP_EN 101
PWROK_PCH 34
FM_VCCST_EN 102
PWRGD_MEM_2P5V 101
SMBUS_CPLD_REG_ALERT_N 51
FM_SMART_THROTTLE 21
PCH_GPPA_DUAL_EN R1287 1 1KOhm 2
PCH_1P05V_DUAL_EN R1288 1 1KOhm 2
BMC_2P5V_DUAL_EN R1289 1 1KOhm 2
BMC_1P2V_DUAL_EN R1290 1 1KOhm 2
BMC_1P15V_DUAL_EN R1291 1 1KOhm 2
RSMRST_PLD#_R R1292 1 2KOHM 2
FM_VCCST_EN_R R1294 1 2KOHM 2
MEM_2P5V_VPP_EN R1295 1 1KOhm 2
MEM_1P2V_VDDQ_EN R1297 1 1KOhm 2
FM_SMART_THROTTLE_R R1298 1 2KOHM 2
CPU_1P0V_VCCIO_EN R1299 1 1KOhm 2
CPU_1P05V_VCCSA_EN R1300 1 1KOhm 2
CPU_VCORE_EN R1301 1 1KOhm 2
FM_PSU_EN_R R1303 1 2KOHM 2
PLD_JTAG_TCK R1350 1 1KOhm 2
+3P3V_DUAL_CPLD
PLD_JTAG_TDO_R R1325 2 10KOhm 1 /X
PLD_JTAG_TDI_R R1328 2 10KOhm 1
PROGRAMN R1916 1 4.7KOhm 2
PLD_JTAG_TMS_R R1330 2 10KOhm 1
VCCST_PWRGD# R1309 1 10KOhm 2
RST_SRST_PLD# R1310 1 10KOhm 2
PWRGD_CPU_VCORE R1312 1 10KOhm 2
C910 2 1 0.01UF/50V /X
PWRGD_CPU_VCORE_R R1316 1 49.9 OHM 2 1% PWRGD_CPU_VCORE
PWRGD_CPU_VCORE 91
FPGA_PROCHOT C911 2 1 100PF/50V NPO/+/-5%
R1318 1 2KOHM 2
PWROK_PCH_R C912 2 1 100PF/50V NPO/+/-5%
R1319 1 2KOHM 2
CPLD1A
LCMXO3LF
F6 GND_10
F7 PT16A
F8 PT18A
F9 PT19C
PT11C A3 R1784 1 0Ohm 2
PT10A A4 R1785 1 0Ohm 2
PT11A A5 R1786 1 0Ohm 2
PT12D A6 PLD_JTAG_TDI_R R1332 1 33.2OHM 2 1%
PT16C A7 PLD_JTAG_TCK_R R1327 1 33.2OHM 2 1%
PT17B A8 R1789 1 0Ohm 2
PT18C A9 BMC_SCL7
PT19B A10 R1791 1 0Ohm 2
PT21A A11 R1788 1 0Ohm 2
PT22B A12 R1787 1 0Ohm 2
PT24C A13 R1790 1 0Ohm 2
PT22D A14 +1V_VCCST_VRGD
PT24B A15
PT9C B3
PT11D B4 SW1_RSVD8
PT9B B5 SW1_RSVD5
PT11B B6 CPLD_ALL_VR_ENABLE
PT13A B7 SW1_RSVD4
PT16D B8 PLD_JTAG_TMS_R R1329 1 33.2OHM 2 1%
PT19A B9 SW1_RSVD6
PT20D B10 PROGRAMN
PT22A B11 SW1_RSVD7
PT23B B12
PT22C B13
PT24A B14
PT9A C4
PT10B C5
PT12C C6 PLD_JTAG_TDO_R R1340 1 33.2OHM 2 1%
PT13B C7
PT17A C8
PT18D C9 BMC_SDA7
PT20C C10 PLD_JTAG_JTAGEN
PT21B C11
PT23A C12
PT24D C13 1 /X
VCCIO0_2 D5 +3P3V_DUAL_CPLD
PT12A D6 1 /X
PT13D D7
PT17C D8
PT18B D9
PT20A D10
PT21D D11
VCCIO0_1 D12 +3P3V_DUAL_CPLD
GND_8 E5
PT13C E6 PLTRST_PLD2#_R R1911 1 33.2OHM 2 1%
PT12B E7 PLTRST_PLD3#_R R1912 1 33.2OHM 2 1%
PT16B E8
PT17D E9
PT20B E10
PT19D E11
GND_7 E12
OCP2_LD# 30
OCP2_DATA_IN 30
OCP2_DATA_OUT 30
PLD_JTAG_TDI 82
PLD_JTAG_TCK 82
OCP1_DATA_IN 29
BMC_SCL7 34,50
OCP1_SCAN_CLK 29
OCP1_LD# 29
OCP2_SCAN_CLK 30
OCP1_DATA_OUT 29
+1V_VCCST_VRGD 61
OCP1_PWRBRK# 29
OCP2_PWRBRK# 30
PLD_JTAG_TMS 82
FAN_TACH0 57
FAN_TACH1 57
FAN_TACH2 57
FAN_PWM0 57
FAN_PWM1 57
PLD_JTAG_TDO 82
FAN_PWM3 57
FAN_PWM2 57
BMC_SDA7 34,50
PLD_JTAG_JTAGEN 82
MEM_0P6V_VTT_EN 100
+3P3V_DUAL_CPLD_PG 90
+3P3V_DUAL_CPLD_EN 103
PWRGD_1V_LAN 109
+3P3V_DUAL_EN 110
+1P8V_LAN_PWRGD 109,110
+1P8V_LAN_CPLD_PWRGD 109
PLTRST_PLD2# 80
PLTRST_PLD3# 80
BMC_CPLD_SPARE0 51
BMC_CPLD_SPARE1 51
BMC_CPLD_SPARE2 51
BMC_CPLD_SPARE3 51
+5V_DUAL
R1317 22.1KOhm 1%
FM_PSU_ON#
FM_PSU_ON# 86
Q38 NX7002BK
D G S
FM_PSU_EN R1320 1 49.9 OHM 2 1% R1321 1 0Ohm 2 R1322 1 49.9 OHM 2 1%
R1323 10KOhm
+3.3V_DUAL
R1839 1 2 10KOhm HOST_BMC_UART_SEL
R1840 1 2 10KOhm HOST_SOL_UART_SEL
52,81 HOST_BMC_UART_SEL
51,81 HOST_SOL_UART_SEL
+3.3V_DUAL
HOST_BMC_UART_SEL
HOST_SOL_UART_SEL
R1841 1 2 10KOhm CPLD_ALL_VR_ENABLE
R1842 1 2 10KOhm SW1_RSVD4
R1843 1 2 10KOhm SW1_RSVD5
R1844 1 2 10KOhm SW1_RSVD6
R1845 1 2 10KOhm SW1_RSVD7
R1846 1 2 10KOhm SW1_RSVD8
SW1
ON
SWITCH_16P
1 16
2 15
3 14
4 13
5 12
6 11
7 10
8 9
R1831 1 2 100Ohm 1%
R1832 1 2 100Ohm 1%
R1833 1 2 100Ohm 1%
R1834 1 2 100Ohm 1%
R1835 1 2 100Ohm 1%
R1836 1 2 100Ohm 1%
R1837 1 2 100Ohm 1%
R1838 1 2 100Ohm 1%

<Variant Name>

PEGATRON

PEGATRON PROPRIETARY AND CONFIDENTIAL

Title : 079 CPLD-1

PEGATRON CORPORATION

Engineer: *Tom_Liao*

Size	Project Name	Rev
A3	CLCL-N	1.00

Date: Tuesday, November 27, 2018 Sheet 79 of 110

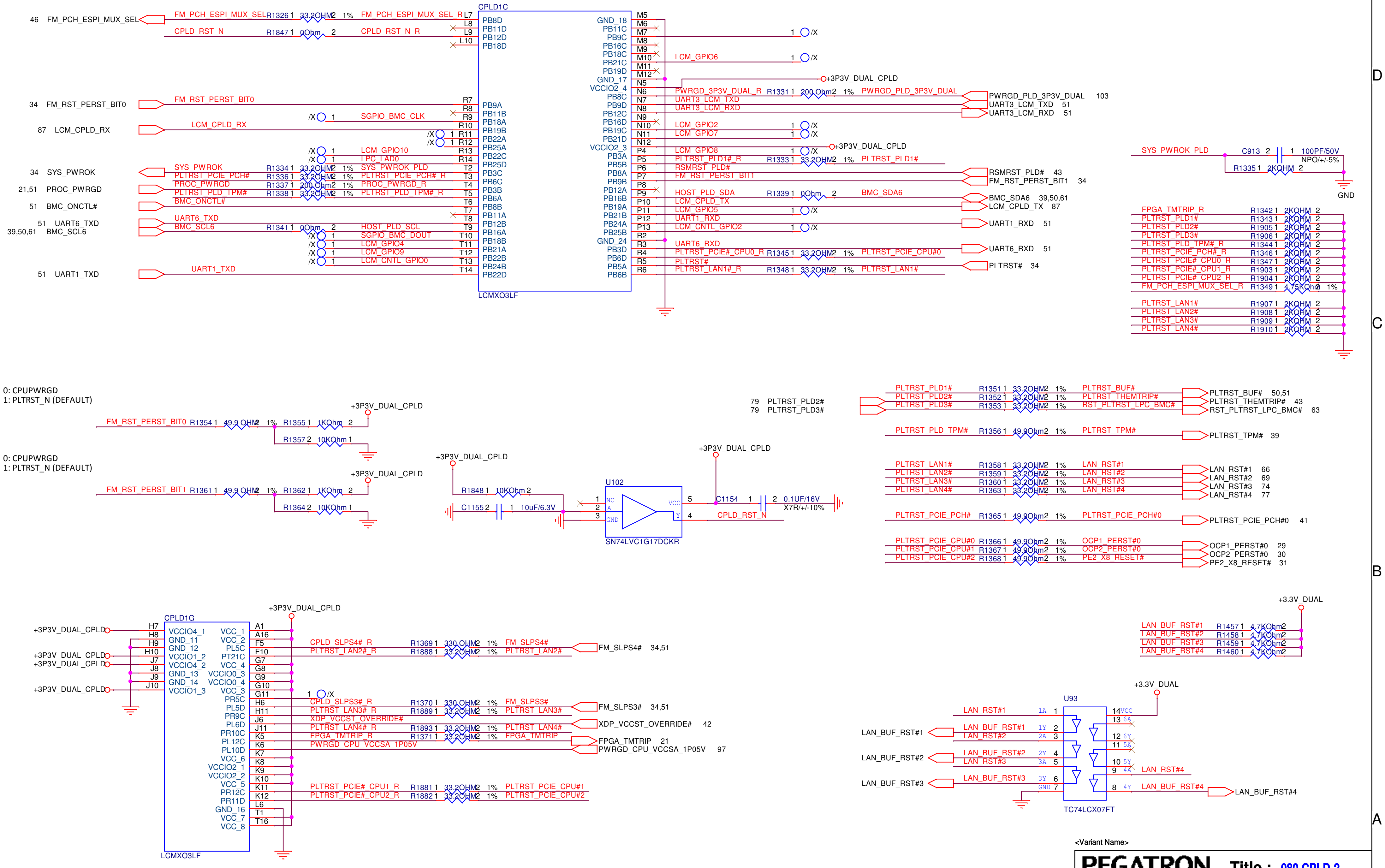
CPLD1C
LCMXO3LF
46 FM_PCH_ESPI_MUX_SEL
FM_PCH_ESPI_MUX_SEL R1326 33.2OHM 1% FM_PCH_ESPI_MUX_SEL_R
CPLD_RST_N R1847 0Ohm CPLD_RST_N_R
PB8D PB11D PB12D PB18D
34 FM_RST_PERST_BIT0
87 LCM_CPLD_RX
SGPIO_BMC_CLK
PB9A PB11B PB18A PB19B PB22A PB25A PB22C PB25D PB3C PB6C PB3B PB6A PB8B PB11A PB12B PB16A PB18B PB21A PB22B PB24B PB22D
LCM_GPIO10
LPC_LAD0
34 SYS_PWROK
SYS_PWROK R1334 33.2OHM 1% SYS_PWROK_PLD
PLTRST_PCIE_PCH# R1336 33.2OHM 1% PLTRST_PCIE_PCH#_R
21,51 PROC_PWRGD
PROC_PWRGD R1337 200 Ohm 1% PROC_PWRGD_R
PLTRST_PLD_TPM# R1338 33.2OHM 1% PLTRST_PLD_TPM#_R
51 BMC_ONCTL#
BMC_ONCTL#
51 UART6_TXD
39,50,61 BMC_SCL6
UART6_TXD
BMC_SCL6 R1341 0Ohm HOST_PLD_SCL
SGPIO_BMC_DOUT
LCM_GPIO4
LCM_GPIO9
LCM_CNTL_GPIO0
51 UART1_TXD
UART1_TXD
GND_18 PB11C PB9C PB16C PB18C PB21C PB19D GND_17 VCCIO2_4 PB8C PB9D PB12C PB16D PB19C PB21D VCCIO2_3 PB3A PB5B PB8A PB9B PB12A PB16B PB19A PB21B PB24A PB25B GND_24 PB3D PB6D PB5A PB6B
LCM_GPIO6
+3P3V_DUAL_CPLD
PWRGD_3P3V_DUAL_R R1331 200 Ohm 1% PWRGD_PLD_3P3V_DUAL
PWRGD_PLD_3P3V_DUAL 103
UART3_LCM_TXD 51
UART3_LCM_RXD 51
LCM_GPIO2
LCM_GPIO7
LCM_GPIO8
PLTRST_PLD1#_R R1333 33.2OHM 1% PLTRST_PLD1#
RSMRST_PLD# 43
FM_RST_PERST_BIT1 34
HOST_PLD_SDA R1339 0Ohm BMC_SDA6
BMC_SDA6 39,50,61
LCM_CPLD_TX 87
LCM_GPIO5
UART1_RXD 51
LCM_CNTL_GPIO2
UART6_RXD 51
PLTRST_PCIE#_CPU0_R R1345 33.2OHM 1% PLTRST_PCIE_CPU#0
PLTRST# 34
PLTRST_LAN1#_R R1348 33.2OHM 1% PLTRST_LAN1#
SYS_PWROK_PLD C913 100PF/50V NPO/+/-5%
R1335 2KOHM
GND
FPGA_TMTRIP_R R1342 2KOHM
PLTRST_PLD1# R1343
PLTRST_PLD2# R1905
PLTRST_PLD3# R1906
PLTRST_PLD_TPM#_R R1344
PLTRST_PCIE_PCH#_R R1346
PLTRST_PCIE#_CPU0_R R1347
PLTRST_PCIE#_CPU1_R R1903
PLTRST_PCIE#_CPU2_R R1904
FM_PCH_ESPI_MUX_SEL_R R1349 4.75KOhm 1%
PLTRST_LAN1# R1907
PLTRST_LAN2# R1908
PLTRST_LAN3# R1909
PLTRST_LAN4# R1910
0: CPUPWRGD
1: PLTRST_N (DEFAULT)
FM_RST_PERST_BIT0 R1354 49.9 OHM 1% R1355 1KOhm
R1357 10KOhm
FM_RST_PERST_BIT1 R1361 49.9 OHM 1% R1362 1KOhm
R1364 10KOhm
R1848 10KOhm
C1155 10uF/6.3V
U102
SN74LVC1G17DCKR
C1154 0.1UF/16V X7R/+/-10%
CPLD_RST_N
79 PLTRST_PLD2#
79 PLTRST_PLD3#
PLTRST_PLD1# R1351 33.2OHM 1% PLTRST_BUF#
PLTRST_PLD2# R1352 33.2OHM 1% PLTRST_THEMTRIP#
PLTRST_PLD3# R1353 33.2OHM 1% RST_PLTRST_LPC_BMC#
PLTRST_BUF# 50,51
PLTRST_THEMTRIP# 43
RST_PLTRST_LPC_BMC# 63
PLTRST_PLD_TPM# R1356 49.9Ohm 1% PLTRST_TPM#
PLTRST_TPM# 39
PLTRST_LAN1# R1358 33.2OHM 1% LAN_RST#1
PLTRST_LAN2# R1359 33.2OHM 1% LAN_RST#2
PLTRST_LAN3# R1360 33.2OHM 1% LAN_RST#3
PLTRST_LAN4# R1363 33.2OHM 1% LAN_RST#4
LAN_RST#1 66
LAN_RST#2 69
LAN_RST#3 74
LAN_RST#4 77
PLTRST_PCIE_PCH# R1365 49.9Ohm 1% PLTRST_PCIE_PCH#0
PLTRST_PCIE_PCH#0 41
PLTRST_PCIE_CPU#0 R1366 49.9Ohm 1% OCP1_PERST#0
PLTRST_PCIE_CPU#1 R1367 49.9Ohm 1% OCP2_PERST#0
PLTRST_PCIE_CPU#2 R1368 49.9Ohm 1% PE2_X8_RESET#
OCP1_PERST#0 29
OCP2_PERST#0 30
PE2_X8_RESET# 31
CPLD1G
LCMXO3LF
VCCIO4_1 GND_11 GND_12 VCCIO1_2 VCCIO4_2 GND_13 GND_14 VCCIO1_3
VCC_1 VCC_2 PL5C F10 PT21C VCC_4 VCCIO0_3 VCCIO0_4 VCC_3 PR5C PL5D PR9C PL6D PR10C PL12C PL10D VCC_6 VCCIO2_1 VCCIO2_2 VCC_5 PR12C PR11D GND_16 VCC_7 VCC_8
CPLD_SLPS4#_R R1369 330 OHM 1% FM_SLPS4#
PLTRST_LAN2#_R R1888 33.2OHM 1% PLTRST_LAN2#
FM_SLPS4# 34,51
CPLD_SLPS3#_R R1370 330 OHM 1% FM_SLPS3#
PLTRST_LAN3#_R R1889 33.2OHM 1% PLTRST_LAN3#
FM_SLPS3# 34,51
XDP_VCCST_OVERRIDE#
XDP_VCCST_OVERRIDE# 42
PLTRST_LAN4#_R R1893 33.2OHM 1% PLTRST_LAN4#
FPGA_TMTRIP_R R1371 33.2OHM 1% FPGA_TMTRIP
FPGA_TMTRIP 21
PWRGD_CPU_VCCSA_1P05V
PWRGD_CPU_VCCSA_1P05V 97
PLTRST_PCIE#_CPU1_R R1881 33.2OHM 1% PLTRST_PCIE_CPU#1
PLTRST_PCIE#_CPU2_R R1882 33.2OHM 1% PLTRST_PCIE_CPU#2
+3.3V_DUAL
LAN_BUF_RST#1 R1457 4.7KOhm
LAN_BUF_RST#2 R1458 4.7KOhm
LAN_BUF_RST#3 R1459 4.7KOhm
LAN_BUF_RST#4 R1460 4.7KOhm
U93
TC74LCX07FT
LAN_RST#1
LAN_BUF_RST#1
LAN_RST#2
LAN_BUF_RST#2
LAN_RST#3
LAN_BUF_RST#3
LAN_RST#4
LAN_BUF_RST#4

<Variant Name>

PEGATRON

PEGATRON PROPRIETARY AND CONFIDENTIAL

PEGATRON CORPORATION

Title : 080 CPLD-2

Engineer: *Tom_Liao*

Size	Project Name	Rev
A3	CLCL-N	1.00

Date: Tuesday, November 27, 2018 Sheet 80 of 110

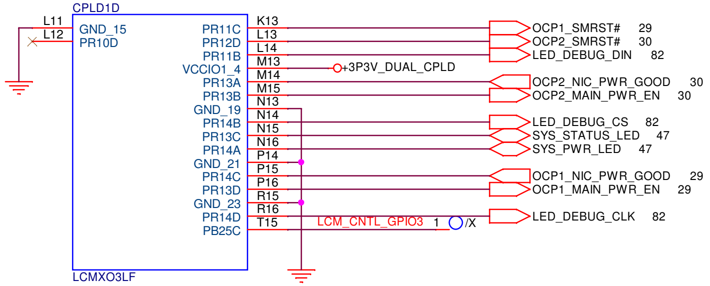
CPLD1D
L11 GND_15
L12 PR10D
PR11C K13 OCP1_SMRST# 29
PR12D L13 OCP2_SMRST# 30
PR11B L14 LED_DEBUG_DIN 82
VCCIO1_4 M13 +3P3V_DUAL_CPLD
PR13A M14 OCP2_NIC_PWR_GOOD 30
PR13B M15 OCP2_MAIN_PWR_EN 30
GND_19 N13
PR14B N14 LED_DEBUG_CS 82
PR13C N15 SYS_STATUS_LED 47
PR14A N16 SYS_PWR_LED 47
GND_21 P14
PR14C P15 OCP1_NIC_PWR_GOOD 29
PR13D P16 OCP1_MAIN_PWR_EN 29
GND_23 R15
PR14D R16 LED_DEBUG_CLK 82
PB25C T15 LCM_CNTL_GPIO3 1 /X
LCMXO3LF

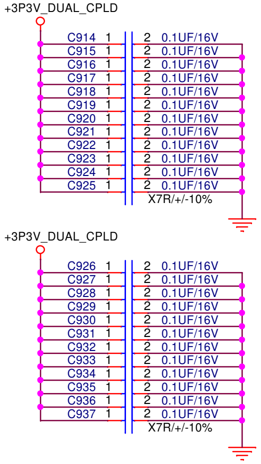
+3P3V_DUAL_CPLD
C914 1 2 0.1UF/16V
C915 1 2 0.1UF/16V
C916 1 2 0.1UF/16V
C917 1 2 0.1UF/16V
C918 1 2 0.1UF/16V
C919 1 2 0.1UF/16V
C920 1 2 0.1UF/16V
C921 1 2 0.1UF/16V
C922 1 2 0.1UF/16V
C923 1 2 0.1UF/16V
C924 1 2 0.1UF/16V
C925 1 2 0.1UF/16V
X7R/+/-10%
+3P3V_DUAL_CPLD
C926 1 2 0.1UF/16V
C927 1 2 0.1UF/16V
C928 1 2 0.1UF/16V
C929 1 2 0.1UF/16V
C930 1 2 0.1UF/16V
C931 1 2 0.1UF/16V
C932 1 2 0.1UF/16V
C933 1 2 0.1UF/16V
C934 1 2 0.1UF/16V
C935 1 2 0.1UF/16V
C936 1 2 0.1UF/16V
C937 1 2 0.1UF/16V
X7R/+/-10%

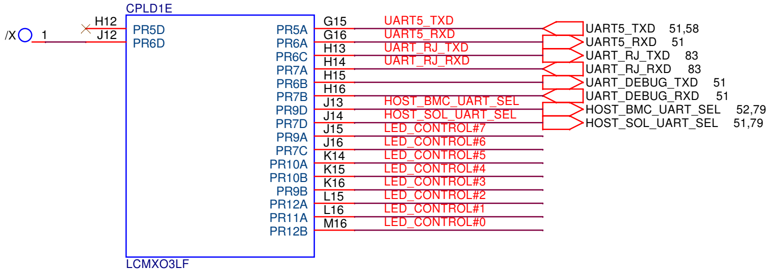
CPLD1E
/X 1
H12 PR5D
J12 PR6D
PR5A G15 UART5_TXD UART5_TXD 51,58
PR6A G16 UART5_RXD UART5_RXD 51
PR6C H13 UART_RJ_TXD UART_RJ_TXD 83
PR7A H14 UART_RJ_RXD UART_RJ_RXD 83
PR6B H15 UART_DEBUG_TXD 51
PR7B H16 UART_DEBUG_RXD 51
PR9D J13 HOST_BMC_UART_SEL HOST_BMC_UART_SEL 52,79
PR7D J14 HOST_SOL_UART_SEL HOST_SOL_UART_SEL 51,79
PR9A J15 LED_CONTROL#7
PR7C J16 LED_CONTROL#6
PR10A K14 LED_CONTROL#5
PR10B K15 LED_CONTROL#4
PR9B K16 LED_CONTROL#3
PR12A L15 LED_CONTROL#2
PR11A L16 LED_CONTROL#1
PR12B M16 LED_CONTROL#0
LCMXO3LF

Check Point Display

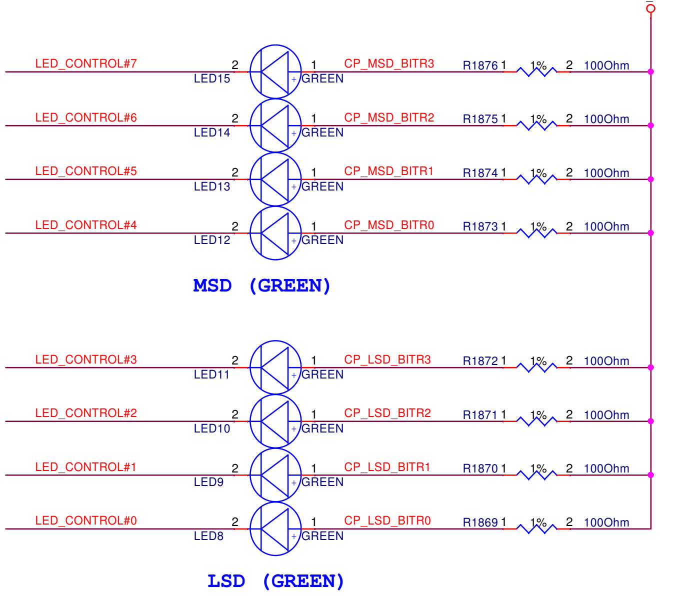
+3.3V_DUAL
LED_CONTROL#7 2 LED15 1 GREEN CP_MSD_BITR3 R1876 1 1% 2 100Ohm
LED_CONTROL#6 2 LED14 1 GREEN CP_MSD_BITR2 R1875 1 1% 2 100Ohm
LED_CONTROL#5 2 LED13 1 GREEN CP_MSD_BITR1 R1874 1 1% 2 100Ohm
LED_CONTROL#4 2 LED12 1 GREEN CP_MSD_BITR0 R1873 1 1% 2 100Ohm
MSD (GREEN)
LED_CONTROL#3 2 LED11 1 GREEN CP_LSD_BITR3 R1872 1 1% 2 100Ohm
LED_CONTROL#2 2 LED10 1 GREEN CP_LSD_BITR2 R1871 1 1% 2 100Ohm
LED_CONTROL#1 2 LED9 1 GREEN CP_LSD_BITR1 R1870 1 1% 2 100Ohm
LED_CONTROL#0 2 LED8 1 GREEN CP_LSD_BITR0 R1869 1 1% 2 100Ohm
LSD (GREEN)

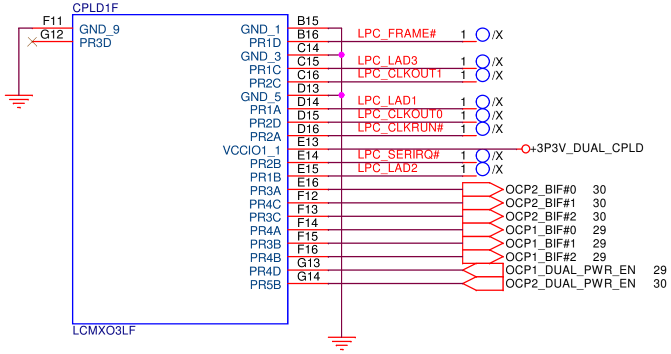
CPLD1F
F11 GND_9
G12 PR3D
GND_1 B15
PR1D B16 LPC_FRAME# 1 /X
GND_3 C14
PR1C C15 LPC_LAD3 1 /X
PR2C C16 LPC_CLKOUT1 1 /X
GND_5 D13
PR1A D14 LPC_LAD1 1 /X
PR2D D15 LPC_CLKOUT0 1 /X
PR2A D16 LPC_CLKRUN# 1 /X
VCCIO1_1 E13 +3P3V_DUAL_CPLD
PR2B E14 LPC_SERIRQ# 1 /X
PR1B E15 LPC_LAD2 1 /X
PR3A E16
PR4C F12 OCP2_BIF#0 30
PR3C F13 OCP2_BIF#1 30
PR4A F14 OCP2_BIF#2 30
PR3B F15 OCP1_BIF#0 29
PR4B F16 OCP1_BIF#1 29
PR4D G13 OCP1_BIF#2 29
PR5B G14 OCP1_DUAL_PWR_EN 29
OCP2_DUAL_PWR_EN 30
LCMXO3LF

<Variant Name>

PEGATRON **Title : 081 CPLD-3**
PEGATRON PROPRIETARY AND CONFIDENTIAL
PEGATRON CORPORATION **Engineer:** *Ryan2_Wang*
Size A3 Project Name **CLCL-N** Rev 1.00
Date: Tuesday, November 27, 2018 Sheet 81 of 110

JTAG HEADER-CPLD

JTAG HEADER-BMC

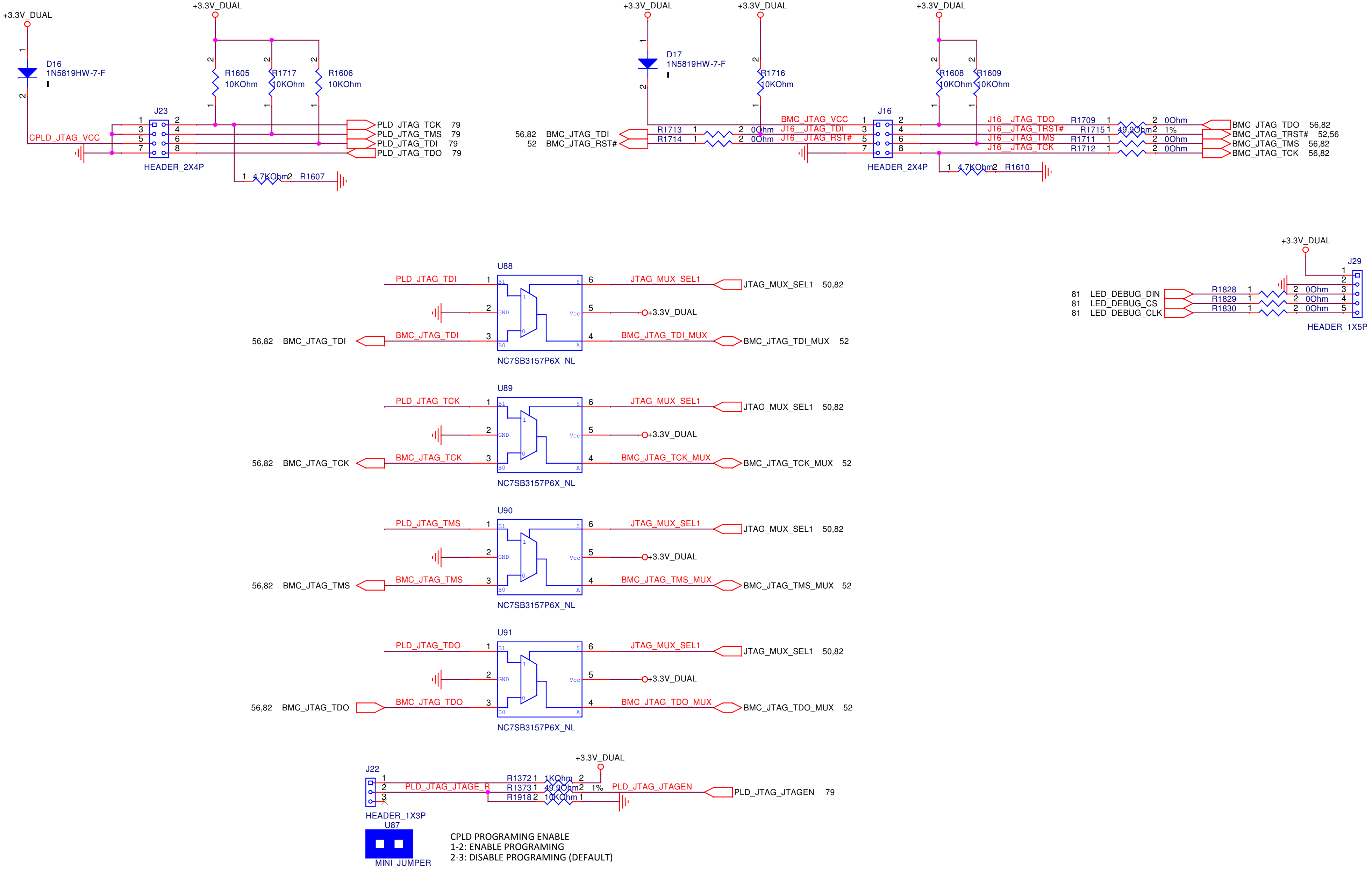
5
4
3
2
1
D
C
B
A
+3.3V_DUAL
D16
1N5819HW-7-F
CPLD_JTAG_VCC
R1605
10KOhm
R1717
10KOhm
R1606
10KOhm
J23
HEADER_2X4P
PLD_JTAG_TCK 79
PLD_JTAG_TMS 79
PLD_JTAG_TDI 79
PLD_JTAG_TDO 79
4.7KOhm
R1607
D17
1N5819HW-7-F
R1716
10KOhm
R1608
10KOhm
R1609
10KOhm
J16
HEADER_2X4P
56,82 BMC_JTAG_TDI
52 BMC_JTAG_RST#
R1713
R1714
0Ohm
BMC_JTAG_VCC
J16_JTAG_TDI
J16_JTAG_RST#
J16_JTAG_TDO
J16_JTAG_TRST#
J16_JTAG_TMS
J16_JTAG_TCK
R1709
R1715
R1711
R1712
49.9Ohm
1%
BMC_JTAG_TDO 56,82
BMC_JTAG_TRST# 52,56
BMC_JTAG_TMS 56,82
BMC_JTAG_TCK 56,82
4.7KOhm
R1610
J29
HEADER_1X5P
81 LED_DEBUG_DIN
81 LED_DEBUG_CS
81 LED_DEBUG_CLK
R1828
R1829
R1830
U88
PLD_JTAG_TDI
JTAG_MUX_SEL1
JTAG_MUX_SEL1 50,82
56,82 BMC_JTAG_TDI
BMC_JTAG_TDI
BMC_JTAG_TDI_MUX
BMC_JTAG_TDI_MUX 52
NC7SB3157P6X_NL
U89
PLD_JTAG_TCK
56,82 BMC_JTAG_TCK
BMC_JTAG_TCK
BMC_JTAG_TCK_MUX
BMC_JTAG_TCK_MUX 52
NC7SB3157P6X_NL
U90
PLD_JTAG_TMS
56,82 BMC_JTAG_TMS
BMC_JTAG_TMS
BMC_JTAG_TMS_MUX
BMC_JTAG_TMS_MUX 52
NC7SB3157P6X_NL
U91
PLD_JTAG_TDO
56,82 BMC_JTAG_TDO
BMC_JTAG_TDO
BMC_JTAG_TDO_MUX
BMC_JTAG_TDO_MUX 52
NC7SB3157P6X_NL
B1
GND
B0
S
Vcc
A
J22
HEADER_1X3P
PLD_JTAG_JTAGE_R
R1372 1KOhm
R1373 49.9Ohm 1%
R1918 10KOhm
PLD_JTAG_JTAGEN
PLD_JTAG_JTAGEN 79
U87
MINI_JUMPER

CPLD PROGRAMING ENABLE
1-2: ENABLE PROGRAMING
2-3: DISABLE PROGRAMING (DEFAULT)

<Variant Name>

PEGATRON
PEGATRON PROPRIETARY AND CONFIDENTIAL
PEGATRON CORPORATION

Title : 082 JTAG MUX
Engineer: Ryan2_Wang

Size	Project Name	Rev
A3	<Doc>	1.00

Date: Tuesday, November 27, 2018 Sheet 82 of 110

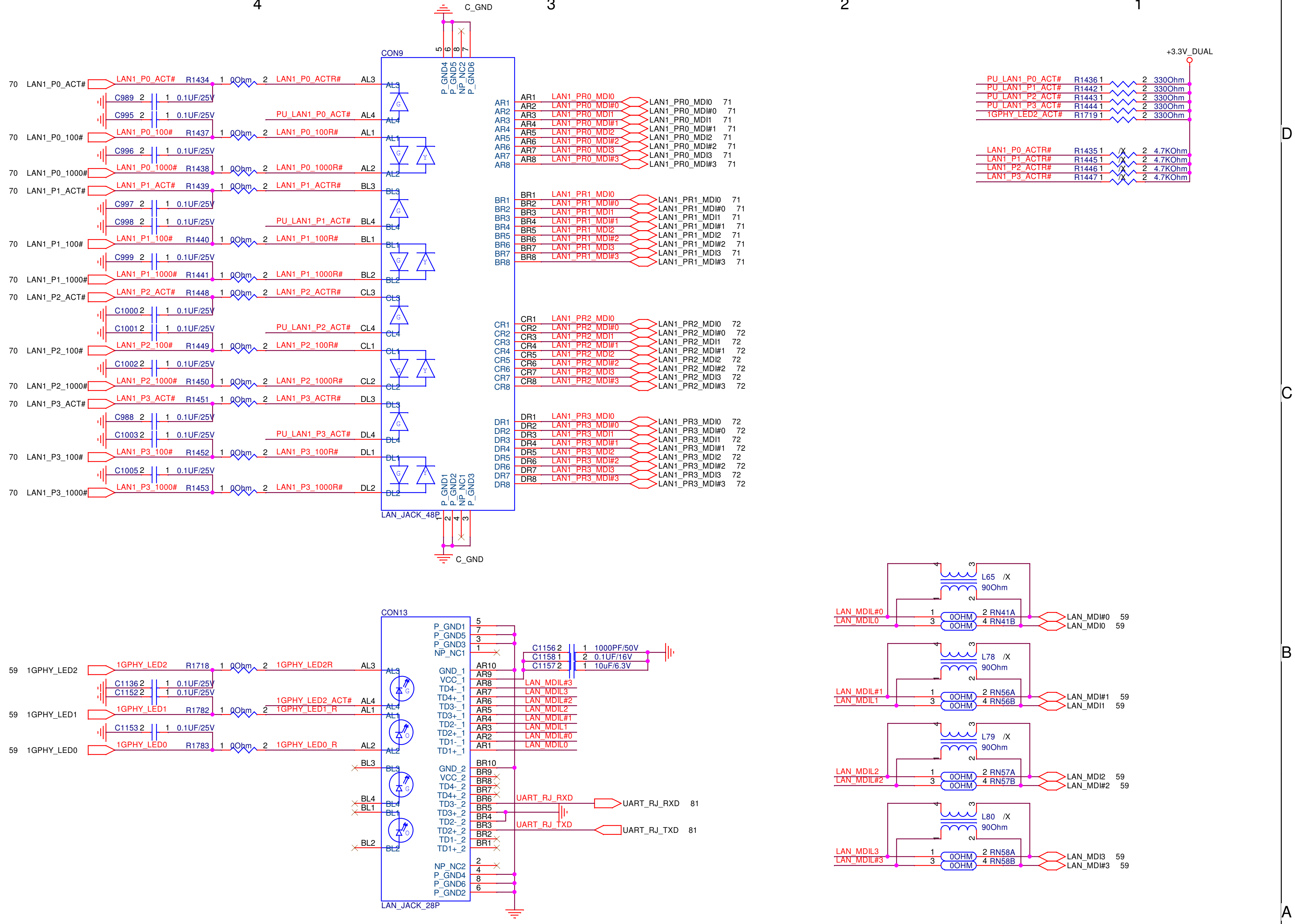
C_GND
CON9
LAN_JACK_48P
P_GND4
P_GND5
NP_NC2
P_GND6
P_GND1
P_GND2
NP_NC1
P_GND3
+3.3V_DUAL
70 LAN1_P0_ACT#
LAN1_P0_ACT# R1434 1 0Ohm 2 LAN1_P0_ACTR# AL3
C989 2 1 0.1UF/25V
C995 2 1 0.1UF/25V
PU_LAN1_P0_ACT# AL4
70 LAN1_P0_100#
LAN1_P0_100# R1437 1 0Ohm 2 LAN1_P0_100R# AL1
C996 2 1 0.1UF/25V
70 LAN1_P0_1000#
LAN1_P0_1000# R1438 1 0Ohm 2 LAN1_P0_1000R# AL2
70 LAN1_P1_ACT#
LAN1_P1_ACT# R1439 1 0Ohm 2 LAN1_P1_ACTR# BL3
C997 2 1 0.1UF/25V
C998 2 1 0.1UF/25V
PU_LAN1_P1_ACT# BL4
70 LAN1_P1_100#
LAN1_P1_100# R1440 1 0Ohm 2 LAN1_P1_100R# BL1
C999 2 1 0.1UF/25V
70 LAN1_P1_1000#
LAN1_P1_1000# R1441 1 0Ohm 2 LAN1_P1_1000R# BL2
70 LAN1_P2_ACT#
LAN1_P2_ACT# R1448 1 0Ohm 2 LAN1_P2_ACTR# CL3
C1000 2 1 0.1UF/25V
C1001 2 1 0.1UF/25V
PU_LAN1_P2_ACT# CL4
70 LAN1_P2_100#
LAN1_P2_100# R1449 1 0Ohm 2 LAN1_P2_100R# CL1
C1002 2 1 0.1UF/25V
70 LAN1_P2_1000#
LAN1_P2_1000# R1450 1 0Ohm 2 LAN1_P2_1000R# CL2
70 LAN1_P3_ACT#
LAN1_P3_ACT# R1451 1 0Ohm 2 LAN1_P3_ACTR# DL3
C988 2 1 0.1UF/25V
C1003 2 1 0.1UF/25V
PU_LAN1_P3_ACT# DL4
70 LAN1_P3_100#
LAN1_P3_100# R1452 1 0Ohm 2 LAN1_P3_100R# DL1
C1005 2 1 0.1UF/25V
70 LAN1_P3_1000#
LAN1_P3_1000# R1453 1 0Ohm 2 LAN1_P3_1000R# DL2
G
Y
AR1 LAN1_PR0_MDI0 71
AR2 LAN1_PR0_MDI#0 71
AR3 LAN1_PR0_MDI1 71
AR4 LAN1_PR0_MDI#1 71
AR5 LAN1_PR0_MDI2 71
AR6 LAN1_PR0_MDI#2 71
AR7 LAN1_PR0_MDI3 71
AR8 LAN1_PR0_MDI#3 71
BR1 LAN1_PR1_MDI0 71
BR2 LAN1_PR1_MDI#0 71
BR3 LAN1_PR1_MDI1 71
BR4 LAN1_PR1_MDI#1 71
BR5 LAN1_PR1_MDI2 71
BR6 LAN1_PR1_MDI#2 71
BR7 LAN1_PR1_MDI3 71
BR8 LAN1_PR1_MDI#3 71
CR1 LAN1_PR2_MDI0 72
CR2 LAN1_PR2_MDI#0 72
CR3 LAN1_PR2_MDI1 72
CR4 LAN1_PR2_MDI#1 72
CR5 LAN1_PR2_MDI2 72
CR6 LAN1_PR2_MDI#2 72
CR7 LAN1_PR2_MDI3 72
CR8 LAN1_PR2_MDI#3 72
DR1 LAN1_PR3_MDI0 72
DR2 LAN1_PR3_MDI#0 72
DR3 LAN1_PR3_MDI1 72
DR4 LAN1_PR3_MDI#1 72
DR5 LAN1_PR3_MDI2 72
DR6 LAN1_PR3_MDI#2 72
DR7 LAN1_PR3_MDI3 72
DR8 LAN1_PR3_MDI#3 72
PU_LAN1_P0_ACT# R1436 1 2 330Ohm
PU_LAN1_P1_ACT# R1442 1 2 330Ohm
PU_LAN1_P2_ACT# R1443 1 2 330Ohm
PU_LAN1_P3_ACT# R1444 1 2 330Ohm
1GPHY_LED2_ACT# R1719 1 2 330Ohm
LAN1_P0_ACTR# R1435 1 /X 2 4.7KOhm
LAN1_P1_ACTR# R1445 1 /X 2 4.7KOhm
LAN1_P2_ACTR# R1446 1 /X 2 4.7KOhm
LAN1_P3_ACTR# R1447 1 /X 2 4.7KOhm
CON13
LAN_JACK_28P
59 1GPHY_LED2
1GPHY_LED2 R1718 1 0Ohm 2 1GPHY_LED2R AL3
C1136 2 1 0.1UF/25V
C1152 2 1 0.1UF/25V
1GPHY_LED2_ACT# AL4
59 1GPHY_LED1
1GPHY_LED1 R1782 1 0Ohm 2 1GPHY_LED1_R AL1
C1153 2 1 0.1UF/25V
59 1GPHY_LED0
1GPHY_LED0 R1783 1 0Ohm 2 1GPHY_LED0_R AL2
BL3
BL4
BL1
BL2
G
O
P_GND1 5
P_GND5 7
P_GND3 3
NP_NC1 1
GND_1 AR10
VCC_1 AR9
TD4-_1 AR8
TD4+_1 AR7
TD3-_1 AR6
TD3+_1 AR5
TD2-_1 AR4
TD2+_1 AR3
TD1-_1 AR2
TD1+_1 AR1
GND_2 BR10
VCC_2 BR9
TD4-_2 BR8
TD4+_2 BR7
TD3-_2 BR6
TD3+_2 BR5
TD2-_2 BR4
TD2+_2 BR3
TD1-_2 BR2
TD1+_2 BR1
NP_NC2 2
P_GND4 4
P_GND6 8
P_GND2 6
C1156 2 1 1000PF/50V
C1158 1 2 0.1UF/16V
C1157 2 1 10uF/6.3V
LAN_MDIL#3
LAN_MDIL3
LAN_MDIL#2
LAN_MDIL2
LAN_MDIL#1
LAN_MDIL1
LAN_MDIL#0
LAN_MDIL0
UART_RJ_RXD
UART_RJ_RXD 81
UART_RJ_TXD
UART_RJ_TXD 81
L65 /X 90Ohm
LAN_MDIL#0 1 0OHM 2 RN41A LAN_MDI#0 59
LAN_MDIL0 3 0OHM 4 RN41B LAN_MDI0 59
L78 /X 90Ohm
LAN_MDIL#1 1 0OHM 2 RN56A LAN_MDI#1 59
LAN_MDIL1 3 0OHM 4 RN56B LAN_MDI1 59
L79 /X 90Ohm
LAN_MDIL2 1 0OHM 2 RN57A LAN_MDI2 59
LAN_MDIL#2 3 0OHM 4 RN57B LAN_MDI#2 59
L80 /X 90Ohm
LAN_MDIL3 1 0OHM 2 RN58A LAN_MDI3 59
LAN_MDIL#3 3 0OHM 4 RN58B LAN_MDI#3 59

<Variant Name>

PEGATRON **Title : 083 2x1,2x2 RJ45**

PEGATRON PROPRIETARY AND CONFIDENTIAL

PEGATRON CORPORATION **Engineer:** *Ryan2_Wang*

Size	Project Name	Rev
A3	<Doc>	1.00

Date: Tuesday, November 27, 2018 Sheet 83 of 110

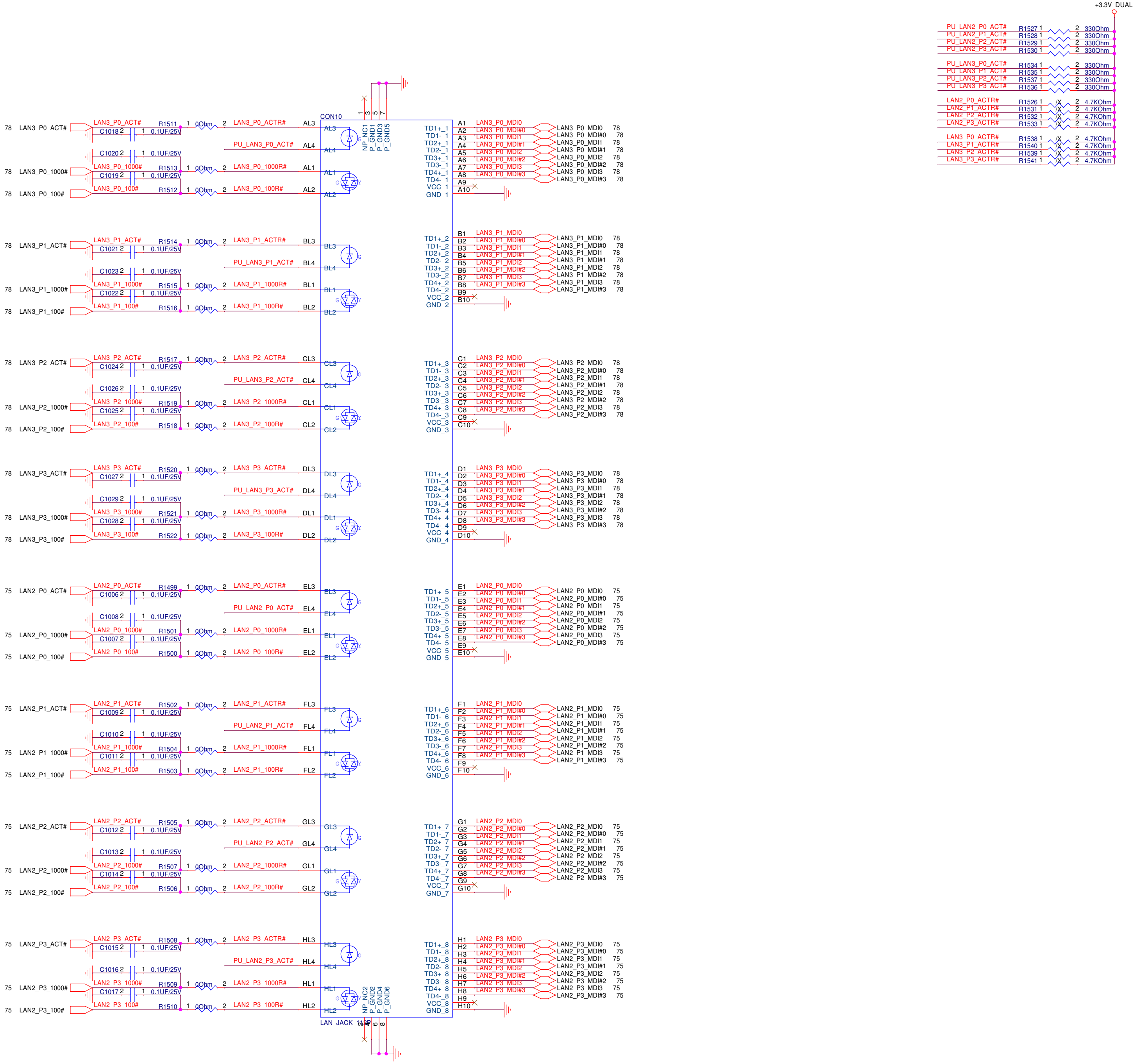
+3.3V_DUAL
PU_LAN2_P0_ACT# R1527 330Ohm
PU_LAN2_P1_ACT# R1528 330Ohm
PU_LAN2_P2_ACT# R1529 330Ohm
PU_LAN2_P3_ACT# R1530 330Ohm
PU_LAN3_P0_ACT# R1534 330Ohm
PU_LAN3_P1_ACT# R1535 330Ohm
PU_LAN3_P2_ACT# R1537 330Ohm
PU_LAN3_P3_ACT# R1536 330Ohm
LAN2_P0_ACTR# R1526 4.7KOhm
LAN2_P1_ACTR# R1531 4.7KOhm
LAN2_P2_ACTR# R1532 4.7KOhm
LAN2_P3_ACTR# R1533 4.7KOhm
LAN3_P0_ACTR# R1538 4.7KOhm
LAN3_P1_ACTR# R1540 4.7KOhm
LAN3_P2_ACTR# R1539 4.7KOhm
LAN3_P3_ACTR# R1541 4.7KOhm
CON10
LAN_JACK_2x4
NP_NC1 P_GND1 P_GND3 P_GND5
NP_NC2 P_GND2 P_GND4 P_GND6
78 LAN3_P0_ACT# R1511 0Ohm LAN3_P0_ACTR# AL3
C1018 0.1UF/25V
PU_LAN3_P0_ACT# AL4
C1020 0.1UF/25V
78 LAN3_P0_1000# R1513 0Ohm LAN3_P0_1000R# AL1
C1019 0.1UF/25V
78 LAN3_P0_100# R1512 0Ohm LAN3_P0_100R# AL2
78 LAN3_P1_ACT# R1514 0Ohm LAN3_P1_ACTR# BL3
C1021 0.1UF/25V
PU_LAN3_P1_ACT# BL4
C1023 0.1UF/25V
78 LAN3_P1_1000# R1515 0Ohm LAN3_P1_1000R# BL1
C1022 0.1UF/25V
78 LAN3_P1_100# R1516 0Ohm LAN3_P1_100R# BL2
78 LAN3_P2_ACT# R1517 0Ohm LAN3_P2_ACTR# CL3
C1024 0.1UF/25V
PU_LAN3_P2_ACT# CL4
C1026 0.1UF/25V
78 LAN3_P2_1000# R1519 0Ohm LAN3_P2_1000R# CL1
C1025 0.1UF/25V
78 LAN3_P2_100# R1518 0Ohm LAN3_P2_100R# CL2
78 LAN3_P3_ACT# R1520 0Ohm LAN3_P3_ACTR# DL3
C1027 0.1UF/25V
PU_LAN3_P3_ACT# DL4
C1029 0.1UF/25V
78 LAN3_P3_1000# R1521 0Ohm LAN3_P3_1000R# DL1
C1028 0.1UF/25V
78 LAN3_P3_100# R1522 0Ohm LAN3_P3_100R# DL2
75 LAN2_P0_ACT# R1499 0Ohm LAN2_P0_ACTR# EL3
C1006 0.1UF/25V
PU_LAN2_P0_ACT# EL4
C1008 0.1UF/25V
75 LAN2_P0_1000# R1501 0Ohm LAN2_P0_1000R# EL1
C1007 0.1UF/25V
75 LAN2_P0_100# R1500 0Ohm LAN2_P0_100R# EL2
75 LAN2_P1_ACT# R1502 0Ohm LAN2_P1_ACTR# FL3
C1009 0.1UF/25V
PU_LAN2_P1_ACT# FL4
C1010 0.1UF/25V
75 LAN2_P1_1000# R1504 0Ohm LAN2_P1_1000R# FL1
C1011 0.1UF/25V
75 LAN2_P1_100# R1503 0Ohm LAN2_P1_100R# FL2
75 LAN2_P2_ACT# R1505 0Ohm LAN2_P2_ACTR# GL3
C1012 0.1UF/25V
PU_LAN2_P2_ACT# GL4
C1013 0.1UF/25V
75 LAN2_P2_1000# R1507 0Ohm LAN2_P2_1000R# GL1
C1014 0.1UF/25V
75 LAN2_P2_100# R1506 0Ohm LAN2_P2_100R# GL2
75 LAN2_P3_ACT# R1508 0Ohm LAN2_P3_ACTR# HL3
C1015 0.1UF/25V
PU_LAN2_P3_ACT# HL4
C1016 0.1UF/25V
75 LAN2_P3_1000# R1509 0Ohm LAN2_P3_1000R# HL1
C1017 0.1UF/25V
75 LAN2_P3_100# R1510 0Ohm LAN2_P3_100R# HL2
TD1+_1 TD1-_1 TD2+_1 TD2-_1 TD3+_1 TD3-_1 TD4+_1 TD4-_1 VCC_1 GND_1
A1 LAN3_P0_MDI0 78
A2 LAN3_P0_MDI#0 78
A3 LAN3_P0_MDI1 78
A4 LAN3_P0_MDI#1 78
A5 LAN3_P0_MDI2 78
A6 LAN3_P0_MDI#2 78
A7 LAN3_P0_MDI3 78
A8 LAN3_P0_MDI#3 78
A9 A10
B1 LAN3_P1_MDI0 78
B2 LAN3_P1_MDI#0 78
B3 LAN3_P1_MDI1 78
B4 LAN3_P1_MDI#1 78
B5 LAN3_P1_MDI2 78
B6 LAN3_P1_MDI#2 78
B7 LAN3_P1_MDI3 78
B8 LAN3_P1_MDI#3 78
B9 B10
C1 LAN3_P2_MDI0 78
C2 LAN3_P2_MDI#0 78
C3 LAN3_P2_MDI1 78
C4 LAN3_P2_MDI#1 78
C5 LAN3_P2_MDI2 78
C6 LAN3_P2_MDI#2 78
C7 LAN3_P2_MDI3 78
C8 LAN3_P2_MDI#3 78
C9 C10
D1 LAN3_P3_MDI0 78
D2 LAN3_P3_MDI#0 78
D3 LAN3_P3_MDI1 78
D4 LAN3_P3_MDI#1 78
D5 LAN3_P3_MDI2 78
D6 LAN3_P3_MDI#2 78
D7 LAN3_P3_MDI3 78
D8 LAN3_P3_MDI#3 78
D9 D10
E1 LAN2_P0_MDI0 75
E2 LAN2_P0_MDI#0 75
E3 LAN2_P0_MDI1 75
E4 LAN2_P0_MDI#1 75
E5 LAN2_P0_MDI2 75
E6 LAN2_P0_MDI#2 75
E7 LAN2_P0_MDI3 75
E8 LAN2_P0_MDI#3 75
E9 E10
F1 LAN2_P1_MDI0 75
F2 LAN2_P1_MDI#0 75
F3 LAN2_P1_MDI1 75
F4 LAN2_P1_MDI#1 75
F5 LAN2_P1_MDI2 75
F6 LAN2_P1_MDI#2 75
F7 LAN2_P1_MDI3 75
F8 LAN2_P1_MDI#3 75
F9 F10
G1 LAN2_P2_MDI0 75
G2 LAN2_P2_MDI#0 75
G3 LAN2_P2_MDI1 75
G4 LAN2_P2_MDI#1 75
G5 LAN2_P2_MDI2 75
G6 LAN2_P2_MDI#2 75
G7 LAN2_P2_MDI3 75
G8 LAN2_P2_MDI#3 75
G9 G10
H1 LAN2_P3_MDI0 75
H2 LAN2_P3_MDI#0 75
H3 LAN2_P3_MDI1 75
H4 LAN2_P3_MDI#1 75
H5 LAN2_P3_MDI2 75
H6 LAN2_P3_MDI#2 75
H7 LAN2_P3_MDI3 75
H8 LAN2_P3_MDI#3 75
H9 H10

<Variant Name>

PEGATRON PEGATRON PROPRIETARY AND CONFIDENTIAL

Title : 084 2x4 RJ45

PEGATRON CORPORATION

Engineer: *Ryan2_Wang*

Size	Project Name	Rev
A2	<Doc>	1.00

Date: Tuesday, November 27, 2018 Sheet 84 of 110

D

C

B

A

<Variant Name>

PEGATRON **Title :** <Title>

PEGATRON PROPRIETARY AND CONFIDENTIAL

PEGATRON CORPORATION **Engineer:** *Ryan2_Wang*

Size	Project Name	Rev
A3	<Doc>	1.00

Date: Tuesday, November 27, 2018

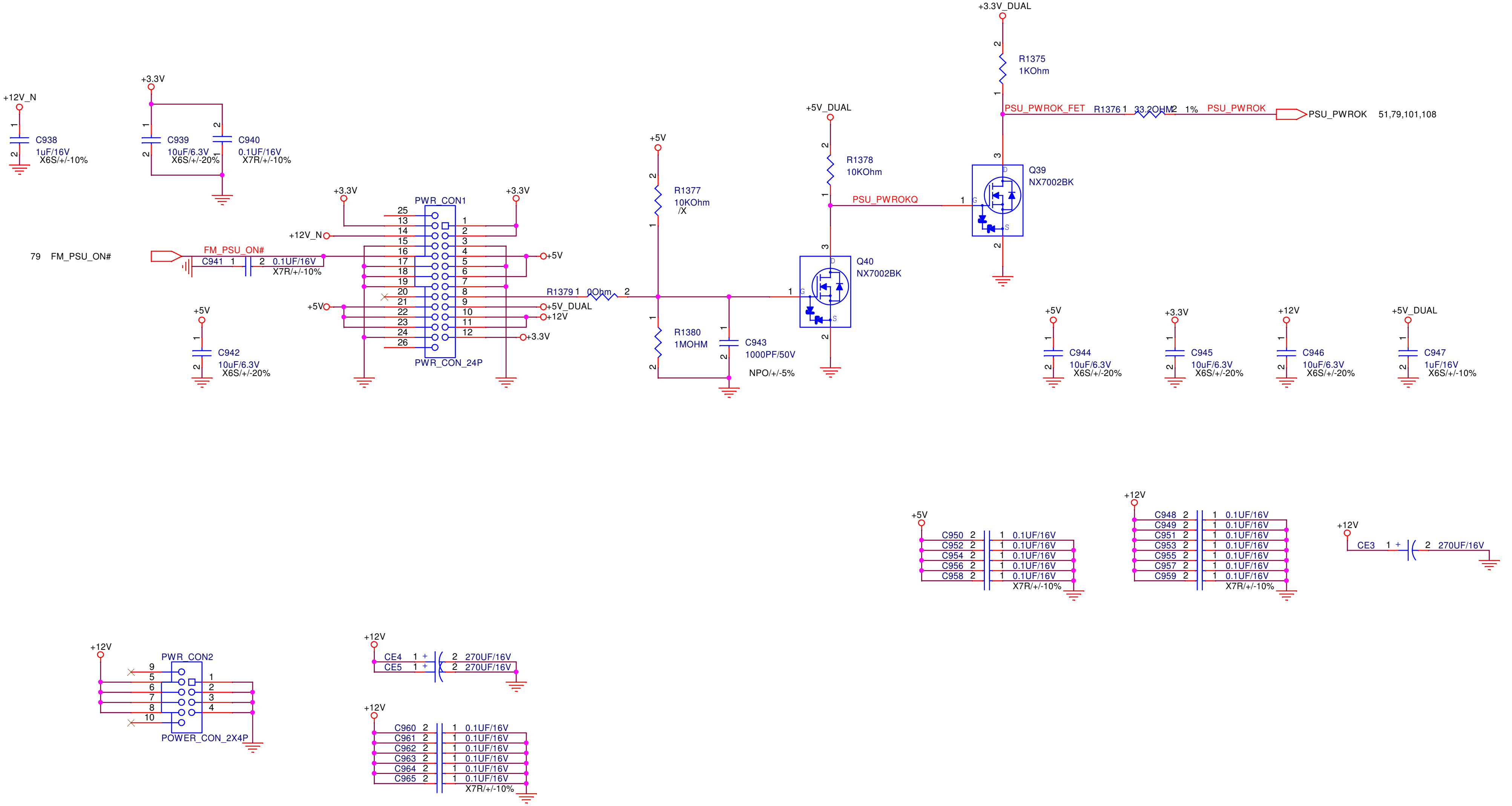
+12V_N
C938
1uF/16V
X6S/+/-10%
+3.3V
C939
10uF/6.3V
X6S/+/-20%
C940
0.1UF/16V
X7R/+/-10%
+3.3V
+3.3V
PWR_CON1
+12V_N
79 FM_PSU_ON#
FM_PSU_ON#
C941 1 2 0.1UF/16V
X7R/+/-10%
+5V
+5V
+5V_DUAL
+12V
+3.3V
PWR_CON_24P
+5V
C942
10uF/6.3V
X6S/+/-20%
+5V
R1377
10KOhm
/X
R1379 1 0Ohm 2
R1380
1MOHM
C943
1000PF/50V
NPO/+/-5%
+5V_DUAL
R1378
10KOhm
PSU_PWROKQ
Q40
NX7002BK
+3.3V_DUAL
R1375
1KOhm
PSU_PWROK_FET
R1376 1 33.2OHM 2 1%
PSU_PWROK
PSU_PWROK 51,79,101,108
Q39
NX7002BK
+5V
C944
10uF/6.3V
X6S/+/-20%
+3.3V
C945
10uF/6.3V
X6S/+/-20%
+12V
C946
10uF/6.3V
X6S/+/-20%
+5V_DUAL
C947
1uF/16V
X6S/+/-10%
+5V
C950 2 1 0.1UF/16V
C952 2 1 0.1UF/16V
C954 2 1 0.1UF/16V
C956 2 1 0.1UF/16V
C958 2 1 0.1UF/16V
X7R/+/-10%
+12V
C948 2 1 0.1UF/16V
C949 2 1 0.1UF/16V
C951 2 1 0.1UF/16V
C953 2 1 0.1UF/16V
C955 2 1 0.1UF/16V
C957 2 1 0.1UF/16V
C959 2 1 0.1UF/16V
X7R/+/-10%
+12V
CE3 1 + 2 270UF/16V
+12V
PWR_CON2
POWER_CON_2X4P
+12V
CE4 1 + 2 270UF/16V
CE5 1 + 2 270UF/16V
+12V
C960 2 1 0.1UF/16V
C961 2 1 0.1UF/16V
C962 2 1 0.1UF/16V
C963 2 1 0.1UF/16V
C964 2 1 0.1UF/16V
C965 2 1 0.1UF/16V
X7R/+/-10%

<Variant Name>

PEGATRON
PEGATRON PROPRIETARY AND CONFIDENTIAL
PEGATRON CORPORATION

Title : 086 PWR CONN

Engineer: *Ryan2_Wang*

Size	Project Name	Rev
A3	<Doc>	1.00

Date: Tuesday, November 27, 2018 Sheet 86 of 110

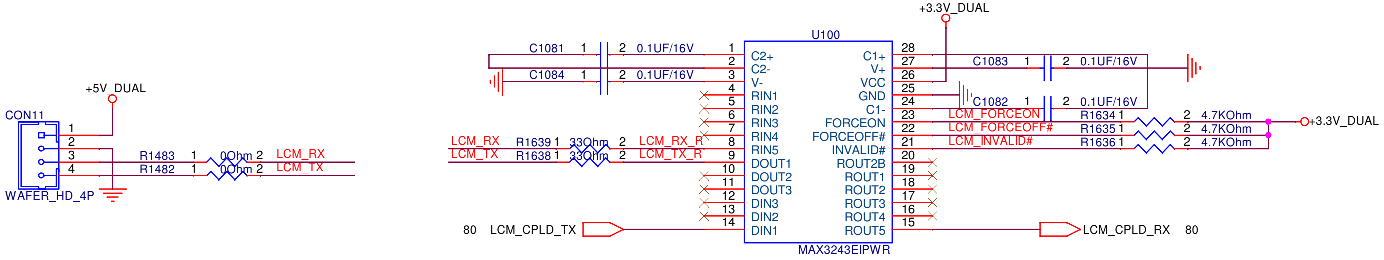
+5V_DUAL
CON11
1
2
3
4
WAFER_HD_4P
R1483 1 0Ohm 2 LCM_RX
R1482 1 0Ohm 2 LCM_TX
C1081 1 2 0.1UF/16V
C1084 1 2 0.1UF/16V
LCM_RX R1639 1 33Ohm 2 LCM_RX_R
LCM_TX R1638 1 33Ohm 2 LCM_TX_R
80 LCM_CPLD_TX
U100
1 C2+
2 C2-
3 V-
4 RIN1
5 RIN2
6 RIN3
7 RIN4
8 RIN5
9 DOUT1
10 DOUT2
11 DOUT3
12 DIN3
13 DIN2
14 DIN1
C1+ 28
V+ 27
VCC 26
GND 25
C1- 24
FORCEON 23
FORCEOFF# 22
INVALID# 21
ROUT2B 20
ROUT1 19
ROUT2 18
ROUT3 17
ROUT4 16
ROUT5 15
MAX3243EIPWR
+3.3V_DUAL
C1083 1 2 0.1UF/16V
C1082 1 2 0.1UF/16V
LCM_FORCEON
LCM_FORCEOFF#
LCM_INVALID#
R1634 1 2 4.7KOhm
R1635 1 2 4.7KOhm
R1636 1 2 4.7KOhm
+3.3V_DUAL
LCM_CPLD_RX 80

<Variant Name>

PEGATRON **Title : 087 LCM OTHER**
PEGATRON PROPRIETARY AND CONFIDENTIAL
PEGATRON CORPORATION **Engineer:** ***Ryan2_Wang***

Size A3
Project Name **<Doc>**
Rev 1.00

Date: Tuesday, November 27, 2018 Sheet 87 of 110

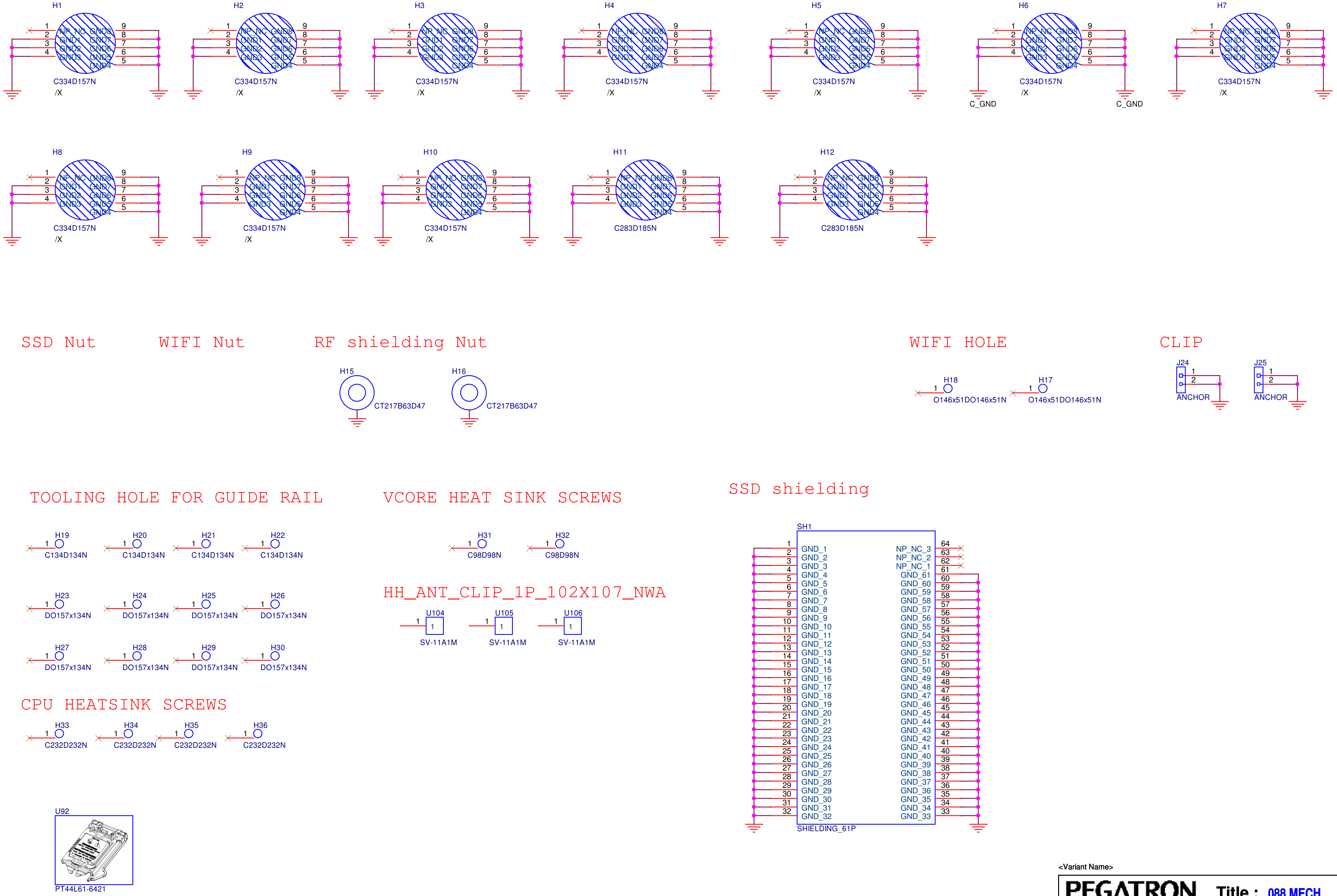
H1
H2
H3
H4
H5
H6
H7
NP_NC
GND1
GND2
GND3
GND4
GND5
GND6
GND7
GND8
C334D157N
/X
C_GND
C_GND
H8
H9
H10
H11
H12
C334D157N
C283D185N
C283D185N
SSD Nut
WIFI Nut
RF shielding Nut
H15
CT217B63D47
H16
CT217B63D47
WIFI HOLE
H18
O146x51DO146x51N
H17
O146x51DO146x51N
CLIP
J24
ANCHOR
J25
ANCHOR
TOOLING HOLE FOR GUIDE RAIL
H19
C134D134N
H20
C134D134N
H21
C134D134N
H22
C134D134N
H23
DO157x134N
H24
DO157x134N
H25
DO157x134N
H26
DO157x134N
H27
DO157x134N
H28
DO157x134N
H29
DO157x134N
H30
DO157x134N
CPU HEATSINK SCREWS
H33
C232D232N
H34
C232D232N
H35
C232D232N
H36
C232D232N
U92
PT44L61-6421
VCORE HEAT SINK SCREWS
H31
C98D98N
H32
C98D98N
HH_ANT_CLIP_1P_102X107_NWA
U104
SV-11A1M
U105
SV-11A1M
U106
SV-11A1M
SSD shielding
SH1
GND_1 … GND_32
NP_NC_3
NP_NC_2
NP_NC_1
GND_61 … GND_33
SHIELDING_61P
5
4
3
2
1
D
C
B
A

<Variant Name>

PEGATRON **Title :** 088 MECH

PEGATRON PROPRIETARY AND CONFIDENTIAL

PEGATRON CORPORATION **Engineer:** *Ryan2_Wang*

Size	Project Name	Rev
A3	<Doc>	1.00

Date: Tuesday, November 27, 2018 Sheet 88 of 110

5 4 3 2 1

D

C

B

A

<Variant Name>

PEGATRON **Title :** <Title>
PEGATRON PROPRIETARY AND CONFIDENTIAL
PEGATRON CORPORATION **Engineer:** *Ryan2_Wang*

Size	Project Name	Rev
A3	<Doc>	1.00

Date: Tuesday, November 27, 2018 Sheet 89 of 110

5 4 3 2 1

Power Rail : +3P3V_DUAL_CPLD
MAX = 0.2A
OCP = 3.5A
Max step = --
DI/DT = --

Pd = 0.34W
ThetaJA = 75°C/W
Tj = 0.4*75+40 = 65 °C < 125 °C

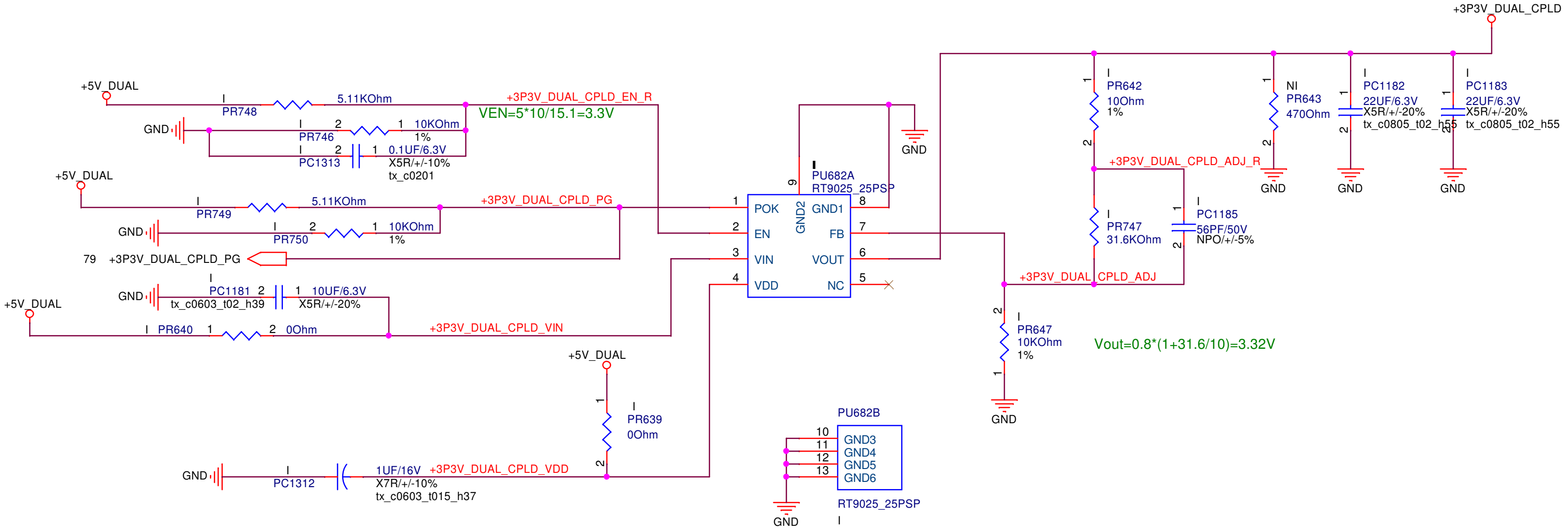

+3P3V_DUAL_CPLD
+5V_DUAL
PR748
5.11KOhm
+3P3V_DUAL_CPLD_EN_R
VEN=5*10/15.1=3.3V
GND
PR746
10KOhm
1%
PC1313
0.1UF/6.3V
X5R/+/-10%
tx_c0201
+5V_DUAL
PR749
5.11KOhm
+3P3V_DUAL_CPLD_PG
GND
PR750
10KOhm
1%
79 +3P3V_DUAL_CPLD_PG
GND
PC1181
10UF/6.3V
tx_c0603_t02_h39
X5R/+/-20%
+5V_DUAL
PR640
0Ohm
+3P3V_DUAL_CPLD_VIN
+5V_DUAL
PR639
0Ohm
GND
PC1312
1UF/16V
+3P3V_DUAL_CPLD_VDD
X7R/+/-10%
tx_c0603_t015_h37
PU682A
RT9025_25PSP
POK
EN
VIN
VDD
GND2
GND1
FB
VOUT
NC
GND
PU682B
GND3
GND4
GND5
GND6
RT9025_25PSP
GND
PR642
10Ohm
1%
NI
PR643
470Ohm
PC1182
22UF/6.3V
X5R/+/-20%
tx_c0805_t02_h55
PC1183
22UF/6.3V
X5R/+/-20%
tx_c0805_t02_h55
GND
GND
GND
+3P3V_DUAL_CPLD_ADJ_R
PR747
31.6KOhm
PC1185
56PF/50V
NPO/+/-5%
+3P3V_DUAL_CPLD_ADJ
PR647
10KOhm
1%
GND
Vout=0.8*(1+31.6/10)=3.32V

<Variant Name>

PEGATRON
PEGATRON PROPRIETARY AND CONFIDENTIAL
PEGATRON CORPORATION

Title : **+3P3V_DUAL_CPLD**
Engineer: ***Gary_Chang***

Size	Project Name	Rev
A3	<Doc>	1.00

Date: Tuesday, November 27, 2018 Sheet 90 of 110

VCORE

Imax=138A
Itdc=100A
VID= 0-1.52V
LL=2.1m ohm
Fsw=450kHz
OCP=195A

VCCGT

Imax=45A
Itdc=30A
VID= 0.55-1.52V/ 1.15V nom
LL=3.1m ohm
Fsw=450kHz
OCP=65A

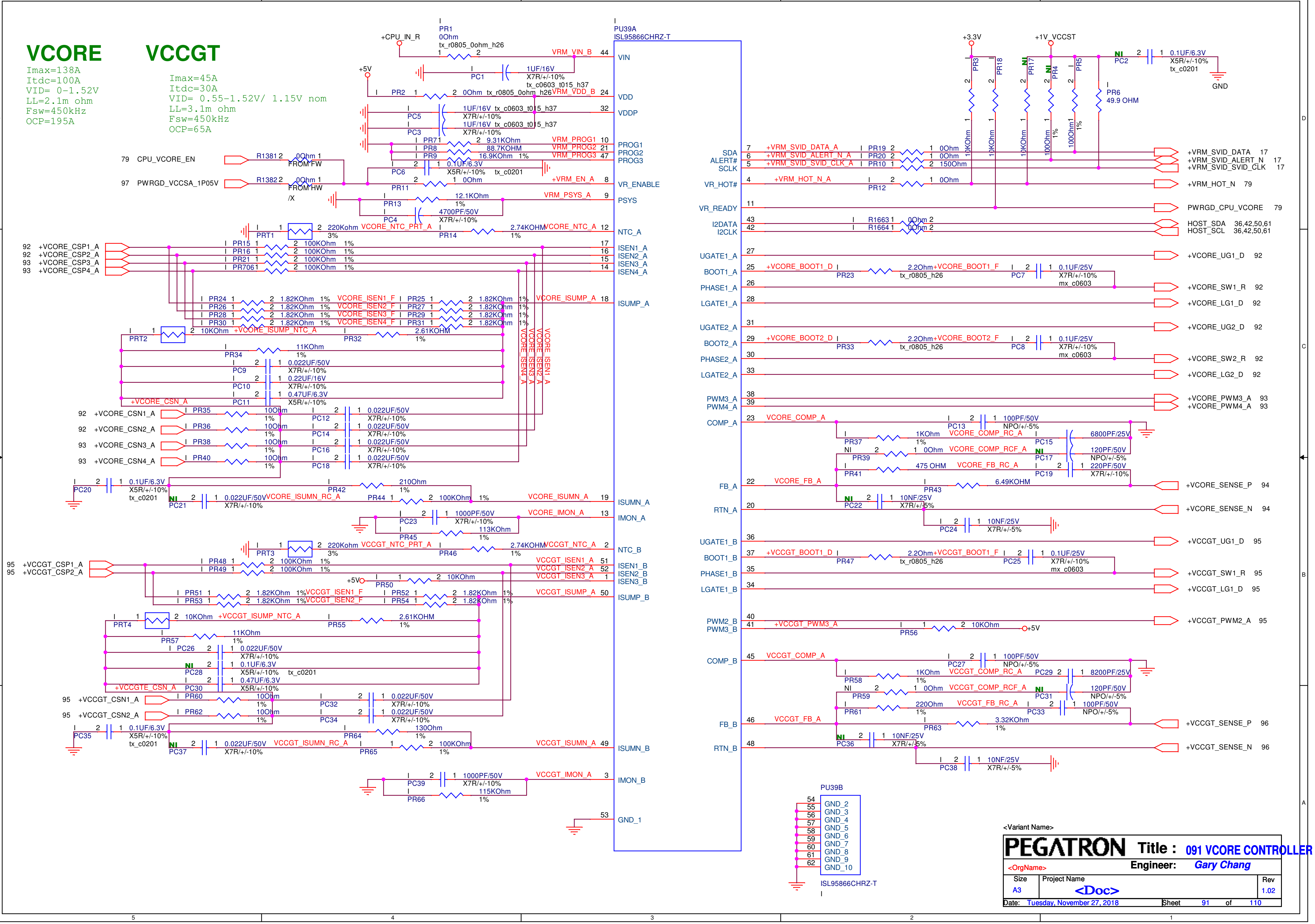
5
4
3
2
1
D
C
B
A
PU39A
ISL95866CHRZ-T
+CPU_IN_R
PR1
0Ohm
tx_r0805_0ohm_h26
VRM_VIN_B
44
VIN
+5V
PC1
1UF/16V
X7R/+/-10%
tx_c0603_t015_h37
PR2
0Ohm
tx_r0805_0ohm_h26
VRM_VDD_B
24
VDD
PC5
1UF/16V tx_c0603_t015_h37
32
VDDP
PC3
1UF/16V tx_c0603_t015_h37
PR71
9.31KOhm
VRM_PROG1
10
PROG1
PR8
88.7KOHM
VRM_PROG2
21
PROG2
PR9
16.9KOhm 1%
VRM_PROG3
47
PROG3
79 CPU_VCORE_EN
R1381
0Ohm
FROM FW
PC6
0.1UF/6.3V
X5R/+/-10%
tx_c0201
97 PWRGD_VCCSA_1P05V
R1382
0Ohm
FROM HW
/X
PR11
0Ohm
+VRM_EN_A
8
VR_ENABLE
PR13
12.1KOhm
1%
VRM_PSYS_A
9
PSYS
PC4
4700PF/50V
X7R/+/-10%
PRT1
220Kohm
3%
VCORE_NTC_PRT_A
PR14
2.74KOHM
1%
VCORE_NTC_A
12
NTC_A
92 +VCORE_CSP1_A
92 +VCORE_CSP2_A
93 +VCORE_CSP3_A
93 +VCORE_CSP4_A
PR15 100KOhm 1%
PR16 100KOhm 1%
PR21 100KOhm 1%
PR706 100KOhm 1%
17 ISEN1_A
16 ISEN2_A
15 ISEN3_A
14 ISEN4_A
PR24 1.82KOhm 1% VCORE_ISEN1_F
PR26 1.82KOhm 1% VCORE_ISEN2_F
PR28 1.82KOhm 1% VCORE_ISEN3_F
PR30 1.82KOhm 1% VCORE_ISEN4_F
PR25 1.82KOhm 1%
PR27 1.82KOhm 1%
PR29 1.82KOhm 1%
PR31 1.82KOhm 1%
VCORE_ISUMP_A
18
ISUMP_A
VCORE_ISEN1_A
VCORE_ISEN2_A
VCORE_ISEN3_A
VCORE_ISEN4_A
PRT2
10KOhm
+VCORE_ISUMP_NTC_A
PR32
2.61KOHM
1%
PR34
11KOhm
1%
PC9
0.022UF/50V
X7R/+/-10%
PC10
0.22UF/16V
X7R/+/-10%
PC11
0.47UF/6.3V
X5R/+/-10%
+VCORE_CSN_A
92 +VCORE_CSN1_A
92 +VCORE_CSN2_A
93 +VCORE_CSN3_A
93 +VCORE_CSN4_A
PR35 10Ohm 1%
PR36 10Ohm 1%
PR38 10Ohm 1%
PR40 10Ohm 1%
PC12 0.022UF/50V X7R/+/-10%
PC14 0.022UF/50V X7R/+/-10%
PC16 0.022UF/50V X7R/+/-10%
PC18 0.022UF/50V X7R/+/-10%
PC20
0.1UF/6.3V
X5R/+/-10%
tx_c0201
PR42
210Ohm
1%
NI
PC21
0.022UF/50V
X7R/+/-10%
VCORE_ISUMN_RC_A
PR44
100KOhm
1%
VCORE_ISUMN_A
19
ISUMN_A
PC23
1000PF/50V
X7R/+/-10%
PR45
113KOhm
1%
VCORE_IMON_A
13
IMON_A
PRT3
220Kohm
3%
VCCGT_NTC_PRT_A
PR46
2.74KOHM
1%
VCCGT_NTC_A
2
NTC_B
95 +VCCGT_CSP1_A
95 +VCCGT_CSP2_A
PR48 100KOhm 1%
PR49 100KOhm 1%
VCCGT_ISEN1_A 51 ISEN1_B
VCCGT_ISEN2_A 52 ISEN2_B
VCCGT_ISEN3_A 1 ISEN3_B
+5V
PR50
10KOhm
PR51 1.82KOhm 1% VCCGT_ISEN1_F
PR53 1.82KOhm 1% VCCGT_ISEN2_F
PR52 1.82KOhm 1%
PR54 1.82KOhm 1%
VCCGT_ISUMP_A
50
ISUMP_B
PRT4
10KOhm
+VCCGT_ISUMP_NTC_A
PR55
2.61KOHM
1%
PR57
11KOhm
1%
PC26
0.022UF/50V
X7R/+/-10%
NI
PC28
0.1UF/6.3V
X5R/+/-10%
tx_c0201
PC30
0.47UF/6.3V
X5R/+/-10%
+VCCGTE_CSN_A
95 +VCCGT_CSN1_A
95 +VCCGT_CSN2_A
PR60 10Ohm 1%
PR62 10Ohm 1%
PC32 0.022UF/50V X7R/+/-10%
PC34 0.022UF/50V X7R/+/-10%
PC35
0.1UF/6.3V
X5R/+/-10%
tx_c0201
PR64
130Ohm
1%
NI
PC37
0.022UF/50V
X7R/+/-10%
VCCGT_ISUMN_RC_A
PR65
100KOhm
1%
VCCGT_ISUMN_A
49
ISUMN_B
PC39
1000PF/50V
X7R/+/-10%
PR66
115KOhm
1%
VCCGT_IMON_A
3
IMON_B
53
GND_1
+3.3V
+1V_VCCST
PR3
PR18
NI PR17
NI PR4
PR5
10KOhm
10KOhm
10KOhm
100Ohm 1%
100Ohm 1%
NI PC2
0.1UF/6.3V
X5R/+/-10%
tx_c0201
GND
PR6
49.9 OHM
SDA 7 +VRM_SVID_DATA_A PR19 0Ohm
ALERT# 6 +VRM_SVID_ALERT_N_A PR20 0Ohm
SCLK 5 +VRM_SVID_SVID_CLK_A PR10 150Ohm
+VRM_SVID_DATA 17
+VRM_SVID_ALERT_N 17
+VRM_SVID_SVID_CLK 17
VR_HOT# 4 +VRM_HOT_N_A PR12 0Ohm
+VRM_HOT_N 79
VR_READY 11
PWRGD_CPU_VCORE 79
I2DATA 43 R1663 0Ohm
I2CLK 42 R1664 0Ohm
HOST_SDA 36,42,50,61
HOST_SCL 36,42,50,61
UGATE1_A 27
+VCORE_UG1_D 92
BOOT1_A 25 +VCORE_BOOT1_D
PR23
2.2Ohm
tx_r0805_h26
+VCORE_BOOT1_F
PC7
0.1UF/25V
X7R/+/-10%
mx_c0603
PHASE1_A 26
+VCORE_SW1_R 92
LGATE1_A 28
+VCORE_LG1_D 92
UGATE2_A 31
+VCORE_UG2_D 92
BOOT2_A 29 +VCORE_BOOT2_D
PR33
2.2Ohm
tx_r0805_h26
+VCORE_BOOT2_F
PC8
0.1UF/25V
X7R/+/-10%
mx_c0603
PHASE2_A 30
+VCORE_SW2_R 92
LGATE2_A 33
+VCORE_LG2_D 92
PWM3_A 38
PWM4_A 39
+VCORE_PWM3_A 93
+VCORE_PWM4_A 93
COMP_A 23 VCORE_COMP_A
PC13
100PF/50V
NPO/+/-5%
PR37
1KOhm
1%
VCORE_COMP_RC_A
PC15
6800PF/25V
PR39
NI
0Ohm
VCORE_COMP_RCF_A
NI
PC17
120PF/50V
NPO/+/-5%
PR41
475 OHM
VCORE_FB_RC_A
PC19
220PF/50V
X7R/+/-10%
FB_A 22 VCORE_FB_A
PR43
6.49KOHM
+VCORE_SENSE_P 94
NI
PC22
10NF/25V
X7R/+/-5%
RTN_A 20
+VCORE_SENSE_N 94
PC24
10NF/25V
X7R/+/-5%
UGATE1_B 36
+VCCGT_UG1_D 95
BOOT1_B 37 +VCCGT_BOOT1_D
PR47
2.2Ohm
tx_r0805_h26
+VCCGT_BOOT1_F
PC25
0.1UF/25V
X7R/+/-10%
mx_c0603
PHASE1_B 35
+VCCGT_SW1_R 95
LGATE1_B 34
+VCCGT_LG1_D 95
PWM2_B 40
PWM3_B 41 +VCCGT_PWM3_A
PR56
10KOhm
+5V
+VCCGT_PWM2_A 95
COMP_B 45 VCCGT_COMP_A
PC27
100PF/50V
NPO/+/-5%
PR58
1KOhm
1%
VCCGT_COMP_RC_A
PC29
8200PF/25V
PR59
NI
0Ohm
VCCGT_COMP_RCF_A
NI
PC31
120PF/50V
NPO/+/-5%
PR61
220Ohm
1%
VCCGT_FB_RC_A
PC33
100PF/50V
NPO/+/-5%
FB_B 46 VCCGT_FB_A
PR63
3.32KOhm
1%
+VCCGT_SENSE_P 96
NI
PC36
10NF/25V
X7R/+/-5%
RTN_B 48
+VCCGT_SENSE_N 96
PC38
10NF/25V
X7R/+/-5%
PU39B
54 GND_2
55 GND_3
56 GND_4
57 GND_5
58 GND_6
59 GND_7
60 GND_8
61 GND_9
62 GND_10
ISL95866CHRZ-T

<Variant Name>

PEGATRON **Title :** **091 VCORE CONTROLLER**

<OrgName> **Engineer:** ***Gary Chang***

Size	Project Name	Rev
A3	<Doc>	1.02

Date: Tuesday, November 27, 2018 Sheet 91 of 110

VCORE DRIVER 2-1

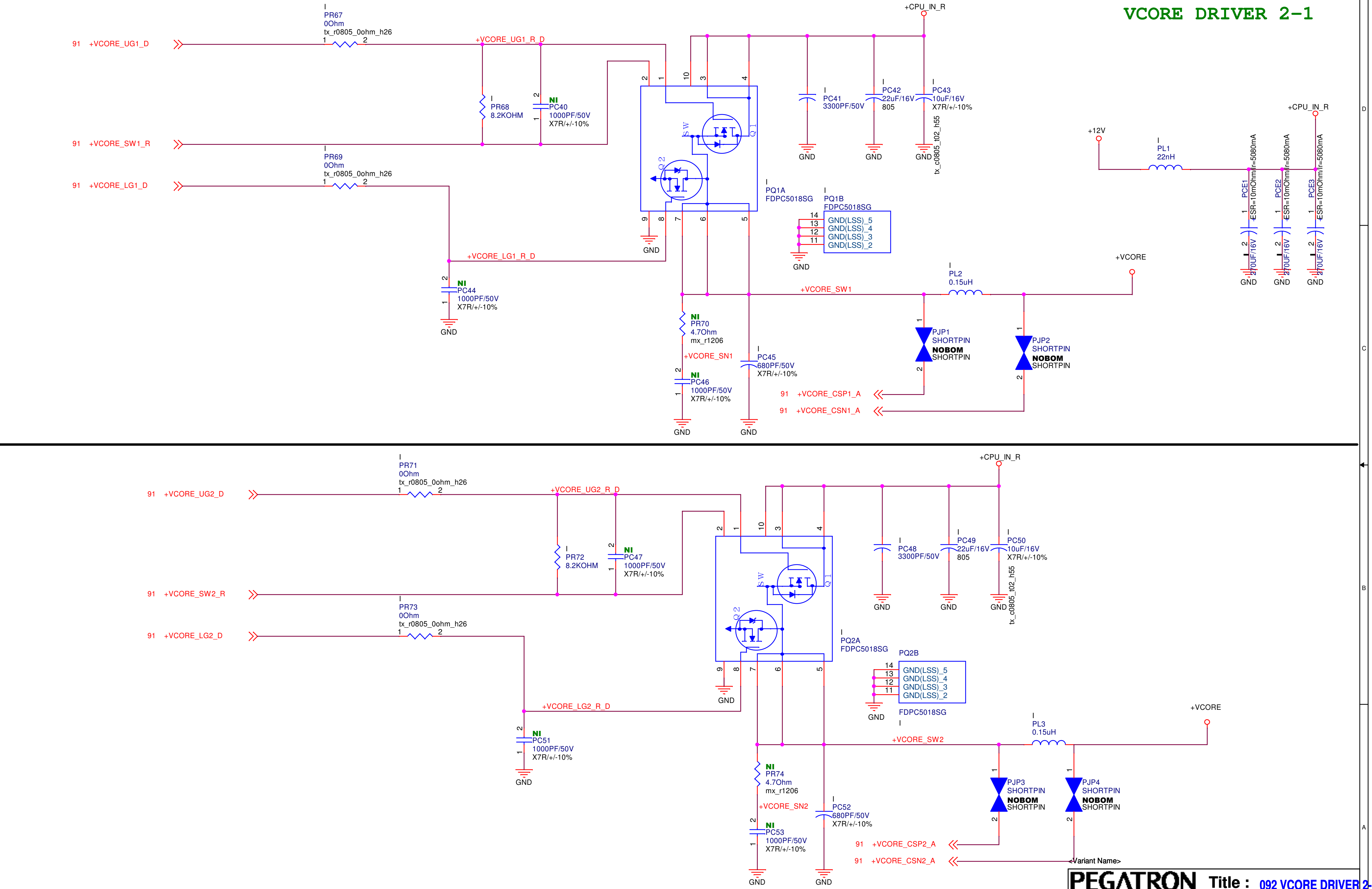
91 +VCORE_UG1_D
PR67
0Ohm
tx_r0805_0ohm_h26
+VCORE_UG1_R_D
PR68
8.2KOHM
NI
PC40
1000PF/50V
X7R/+/-10%
91 +VCORE_SW1_R
PR69
0Ohm
tx_r0805_0ohm_h26
91 +VCORE_LG1_D
+VCORE_LG1_R_D
NI
PC44
1000PF/50V
X7R/+/-10%
GND
+CPU_IN_R
PC41
3300PF/50V
PC42
22uF/16V
805
PC43
10uF/16V
X7R/+/-10%
tx_c0805_t02_h55
SW
Q1
Q2
PQ1A
FDPC5018SG
PQ1B
FDPC5018SG
GND(LSS)_5
GND(LSS)_4
GND(LSS)_3
GND(LSS)_2
+12V
PL1
22nH
PCE1
PCE2
PCE3
ESR=10mOhm/Ir=5080mA
270UF/16V
+VCORE
PL2
0.15uH
+VCORE_SW1
NI
PR70
4.7Ohm
mx_r1206
+VCORE_SN1
NI
PC46
1000PF/50V
X7R/+/-10%
PC45
680PF/50V
X7R/+/-10%
PJP1
SHORTPIN
NOBOM
SHORTPIN
PJP2
SHORTPIN
NOBOM
SHORTPIN
91 +VCORE_CSP1_A
91 +VCORE_CSN1_A
91 +VCORE_UG2_D
PR71
0Ohm
tx_r0805_0ohm_h26
+VCORE_UG2_R_D
PR72
8.2KOHM
NI
PC47
1000PF/50V
X7R/+/-10%
91 +VCORE_SW2_R
PR73
0Ohm
tx_r0805_0ohm_h26
91 +VCORE_LG2_D
+VCORE_LG2_R_D
NI
PC51
1000PF/50V
X7R/+/-10%
PC48
3300PF/50V
PC49
22uF/16V
805
PC50
10uF/16V
X7R/+/-10%
tx_c0805_t02_h55
PQ2A
FDPC5018SG
PQ2B
FDPC5018SG
PL3
0.15uH
+VCORE_SW2
NI
PR74
4.7Ohm
mx_r1206
+VCORE_SN2
NI
PC53
1000PF/50V
X7R/+/-10%
PC52
680PF/50V
X7R/+/-10%
PJP3
SHORTPIN
NOBOM
SHORTPIN
PJP4
SHORTPIN
NOBOM
SHORTPIN
91 +VCORE_CSP2_A
91 +VCORE_CSN2_A

<Variant Name>

PEGATRON Title : 092 VCORE DRIVER 2-1

<OrgName>
Engineer: *Gary Chang*

Size	Project Name	Rev
A3	<Doc>	1.02

Date: Tuesday, November 27, 2018 Sheet 92 of 110

VCORE DRIVER 2-2

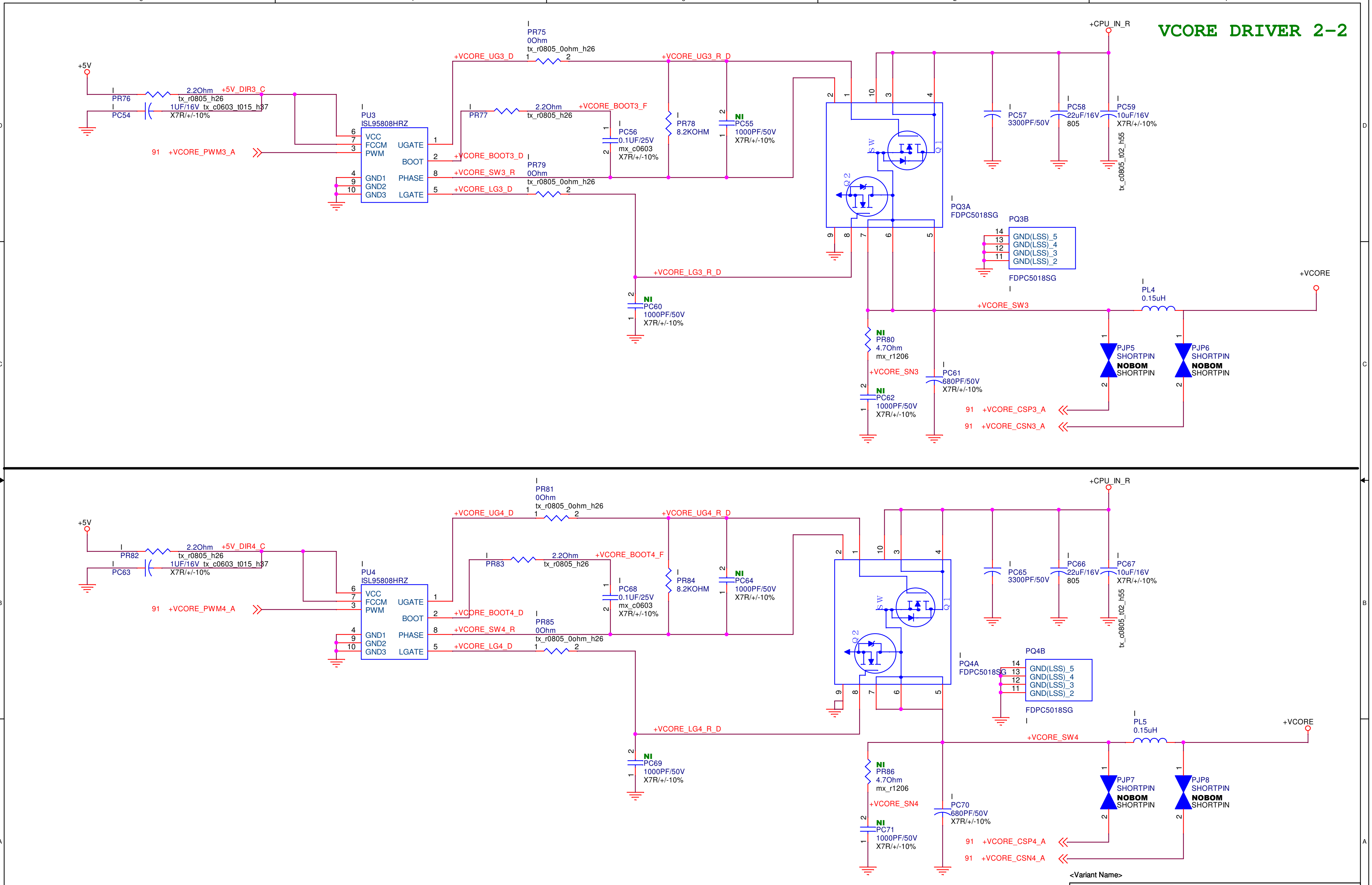
+5V
PR76
2.2Ohm
tx_r0805_h26
+5V_DIR3_C
PC54
1UF/16V tx_c0603_t015_h37
X7R/+/-10%
PU3
ISL95808HRZ
VCC
FCCM
PWM
UGATE
BOOT
PHASE
GND1
GND2
GND3
LGATE
91 +VCORE_PWM3_A
PR75
0Ohm
tx_r0805_0ohm_h26
+VCORE_UG3_D
+VCORE_UG3_R_D
PR77
2.2Ohm
tx_r0805_h26
+VCORE_BOOT3_F
+VCORE_BOOT3_D
+VCORE_SW3_R
+VCORE_LG3_D
PR79
0Ohm
tx_r0805_0ohm_h26
PC56
0.1UF/25V
mx_c0603
X7R/+/-10%
PR78
8.2KOHM
NI
PC55
1000PF/50V
X7R/+/-10%
+CPU_IN_R
PC57
3300PF/50V
PC58
22uF/16V
805
PC59
10uF/16V
X7R/+/-10%
tx_c0805_t02_h55
SW
Q1
Q2
PQ3A
FDPC5018SG
PQ3B
GND(LSS)_5
GND(LSS)_4
GND(LSS)_3
GND(LSS)_2
FDPC5018SG
+VCORE_LG3_R_D
NI
PC60
1000PF/50V
X7R/+/-10%
+VCORE
PL4
0.15uH
+VCORE_SW3
NI
PR80
4.7Ohm
mx_r1206
+VCORE_SN3
NI
PC62
1000PF/50V
X7R/+/-10%
PC61
680PF/50V
X7R/+/-10%
PJP5
SHORTPIN
NOBOM
SHORTPIN
PJP6
SHORTPIN
NOBOM
SHORTPIN
91 +VCORE_CSP3_A
91 +VCORE_CSN3_A
+5V
PR82
2.2Ohm
tx_r0805_h26
+5V_DIR4_C
PC63
1UF/16V tx_c0603_t015_h37
X7R/+/-10%
PU4
ISL95808HRZ
91 +VCORE_PWM4_A
PR81
0Ohm
tx_r0805_0ohm_h26
+VCORE_UG4_D
+VCORE_UG4_R_D
PR83
2.2Ohm
tx_r0805_h26
+VCORE_BOOT4_F
+VCORE_BOOT4_D
+VCORE_SW4_R
+VCORE_LG4_D
PR85
0Ohm
tx_r0805_0ohm_h26
PC68
0.1UF/25V
mx_c0603
X7R/+/-10%
PR84
8.2KOHM
NI
PC64
1000PF/50V
X7R/+/-10%
+CPU_IN_R
PC65
3300PF/50V
PC66
22uF/16V
805
PC67
10uF/16V
X7R/+/-10%
tx_c0805_t02_h55
PQ4A
FDPC5018SG
PQ4B
GND(LSS)_5
GND(LSS)_4
GND(LSS)_3
GND(LSS)_2
FDPC5018SG
+VCORE_LG4_R_D
NI
PC69
1000PF/50V
X7R/+/-10%
+VCORE
PL5
0.15uH
+VCORE_SW4
NI
PR86
4.7Ohm
mx_r1206
+VCORE_SN4
NI
PC71
1000PF/50V
X7R/+/-10%
PC70
680PF/50V
X7R/+/-10%
PJP7
SHORTPIN
NOBOM
SHORTPIN
PJP8
SHORTPIN
NOBOM
SHORTPIN
91 +VCORE_CSP4_A
91 +VCORE_CSN4_A
5
4
3
2
1
D
C
B
A

<Variant Name>

PEGATRON Title : 093 VCORE DRIVER 2-2

<OrgName> Engineer: *Gary Chang*

Size	Project Name	Rev
A3	<Doc>	1.02

Date: Tuesday, November 27, 2018 Sheet 93 of 110

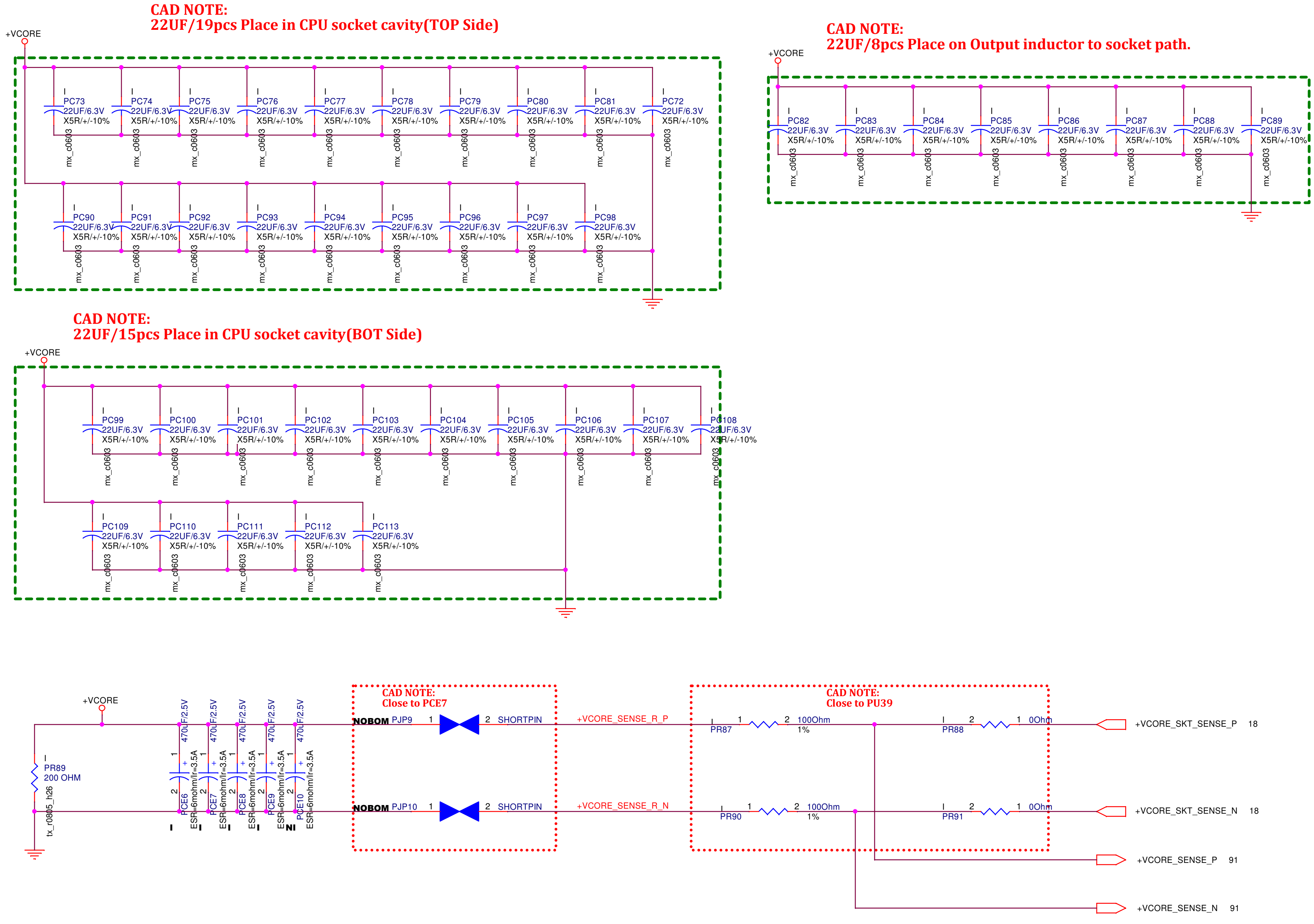

CAD NOTE:
22UF/19pcs Place in CPU socket cavity(TOP Side)

CAD NOTE:
22UF/8pcs Place on Output inductor to socket path.

CAD NOTE:
22UF/15pcs Place in CPU socket cavity(BOT Side)

CAD NOTE:
Close to PCE7

CAD NOTE:
Close to PU39

+VCORE
PC73 22UF/6.3V X5R/+/-10% mx_c0603
PC74 22UF/6.3V X5R/+/-10% mx_c0603
PC75 22UF/6.3V X5R/+/-10% mx_c0603
PC76 22UF/6.3V X5R/+/-10% mx_c0603
PC77 22UF/6.3V X5R/+/-10% mx_c0603
PC78 22UF/6.3V X5R/+/-10% mx_c0603
PC79 22UF/6.3V X5R/+/-10% mx_c0603
PC80 22UF/6.3V X5R/+/-10% mx_c0603
PC81 22UF/6.3V X5R/+/-10% mx_c0603
PC72 22UF/6.3V X5R/+/-10% mx_c0603
PC90 22UF/6.3V X5R/+/-10% mx_c0603
PC91 22UF/6.3V X5R/+/-10% mx_c0603
PC92 22UF/6.3V X5R/+/-10% mx_c0603
PC93 22UF/6.3V X5R/+/-10% mx_c0603
PC94 22UF/6.3V X5R/+/-10% mx_c0603
PC95 22UF/6.3V X5R/+/-10% mx_c0603
PC96 22UF/6.3V X5R/+/-10% mx_c0603
PC97 22UF/6.3V X5R/+/-10% mx_c0603
PC98 22UF/6.3V X5R/+/-10% mx_c0603
+VCORE
PC82 22UF/6.3V X5R/+/-10% mx_c0603
PC83 22UF/6.3V X5R/+/-10% mx_c0603
PC84 22UF/6.3V X5R/+/-10% mx_c0603
PC85 22UF/6.3V X5R/+/-10% mx_c0603
PC86 22UF/6.3V X5R/+/-10% mx_c0603
PC87 22UF/6.3V X5R/+/-10% mx_c0603
PC88 22UF/6.3V X5R/+/-10% mx_c0603
PC89 22UF/6.3V X5R/+/-10% mx_c0603
+VCORE
PC99 22UF/6.3V X5R/+/-10% mx_c0603
PC100 22UF/6.3V X5R/+/-10% mx_c0603
PC101 22UF/6.3V X5R/+/-10% mx_c0603
PC102 22UF/6.3V X5R/+/-10% mx_c0603
PC103 22UF/6.3V X5R/+/-10% mx_c0603
PC104 22UF/6.3V X5R/+/-10% mx_c0603
PC105 22UF/6.3V X5R/+/-10% mx_c0603
PC106 22UF/6.3V X5R/+/-10% mx_c0603
PC107 22UF/6.3V X5R/+/-10% mx_c0603
PC108 22UF/6.3V X5R/+/-10% mx_c0603
PC109 22UF/6.3V X5R/+/-10% mx_c0603
PC110 22UF/6.3V X5R/+/-10% mx_c0603
PC111 22UF/6.3V X5R/+/-10% mx_c0603
PC112 22UF/6.3V X5R/+/-10% mx_c0603
PC113 22UF/6.3V X5R/+/-10% mx_c0603
+VCORE
PR89 200 OHM tx_r0805_h26
PCE6 470uF/2.5V ESR=6mohm/Ir=3.5A I
PCE7 470uF/2.5V ESR=6mohm/Ir=3.5A I
PCE8 470uF/2.5V ESR=6mohm/Ir=3.5A I
PCE9 470uF/2.5V ESR=6mohm/Ir=3.5A I
PCE10 470uF/2.5V ESR=6mohm/Ir=3.5A NI
NOBOM PJP9 1 2 SHORTPIN
NOBOM PJP10 1 2 SHORTPIN
+VCORE_SENSE_R_P
+VCORE_SENSE_R_N
PR87 1 2 100Ohm 1%
PR90 1 2 100Ohm 1%
PR88 2 1 0Ohm
PR91 2 1 0Ohm
+VCORE_SKT_SENSE_P 18
+VCORE_SKT_SENSE_N 18
+VCORE_SENSE_P 91
+VCORE_SENSE_N 91
D C B A

<Variant Name>

PEGATRON Title : 094 VCORE CAP

<OrgName> Engineer: Gary Chang

Size	Project Name	Rev
A3	<Doc>	1.02

Date: Tuesday, November 27, 2018 Sheet 94 of 110

VCCGT DRIVER

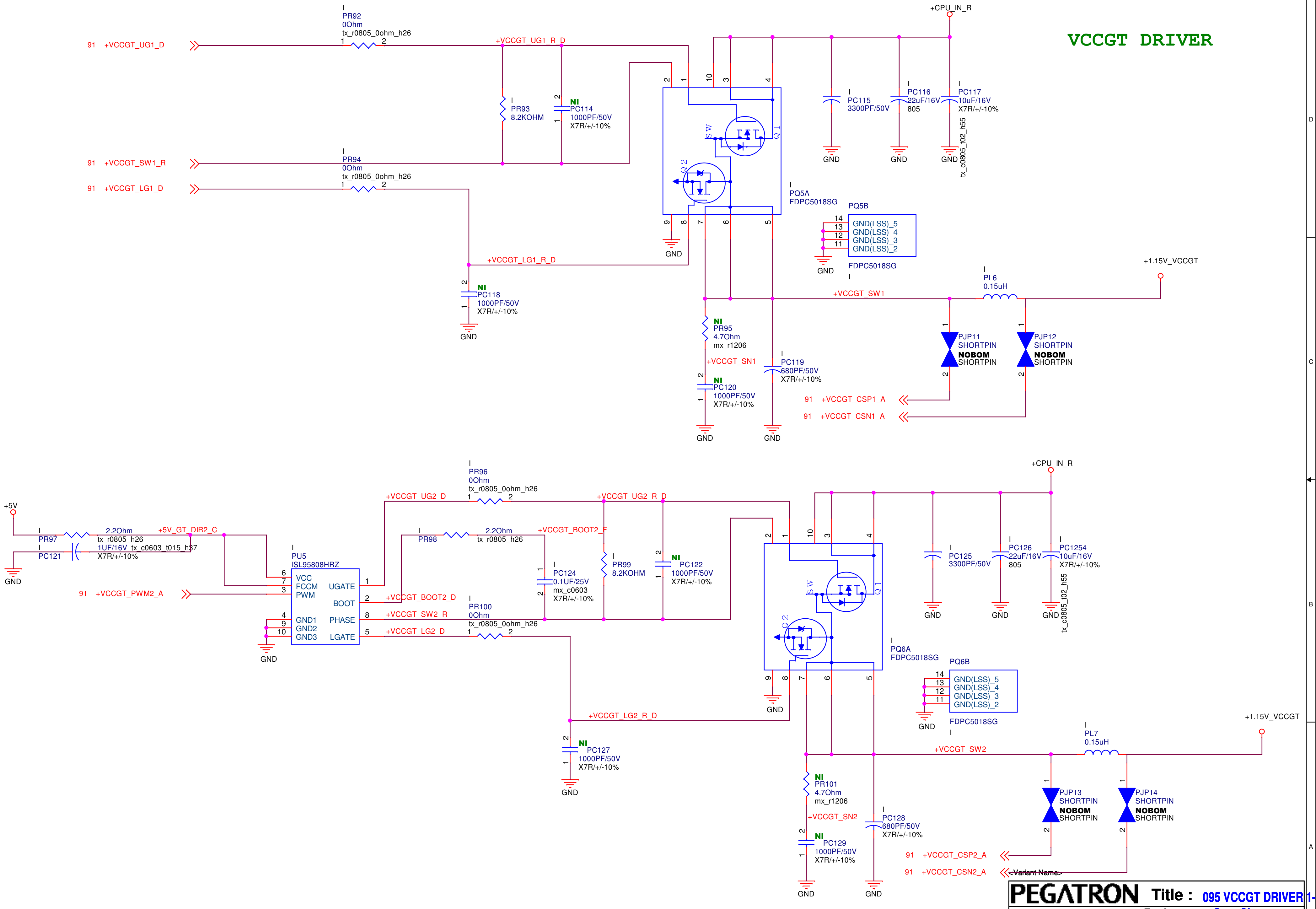
91 +VCCGT_UG1_D
PR92
0Ohm
tx_r0805_0ohm_h26
+VCCGT_UG1_R_D
PR93
8.2KOHM
NI
PC114
1000PF/50V
X7R/+/-10%
91 +VCCGT_SW1_R
PR94
0Ohm
tx_r0805_0ohm_h26
91 +VCCGT_LG1_D
+VCCGT_LG1_R_D
NI
PC118
1000PF/50V
X7R/+/-10%
GND
+CPU_IN_R
PC115
3300PF/50V
PC116
22uF/16V
805
PC117
10uF/16V
X7R/+/-10%
tx_c0805_t02_h55
SW
Q1
Q2
PQ5A
FDPC5018SG
PQ5B
GND(LSS)_5
GND(LSS)_4
GND(LSS)_3
GND(LSS)_2
FDPC5018SG
+1.15V_VCCGT
PL6
0.15uH
+VCCGT_SW1
NI
PR95
4.7Ohm
mx_r1206
+VCCGT_SN1
NI
PC120
1000PF/50V
X7R/+/-10%
PC119
680PF/50V
X7R/+/-10%
PJP11
SHORTPIN
NOBOM
SHORTPIN
PJP12
SHORTPIN
NOBOM
SHORTPIN
91 +VCCGT_CSP1_A
91 +VCCGT_CSN1_A
+5V
PR97
2.2Ohm
tx_r0805_h26
PC121
1UF/16V tx_c0603_t015_h37
X7R/+/-10%
+5V_GT_DIR2_C
PU5
ISL95808HRZ
VCC
FCCM
PWM
GND1
GND2
GND3
UGATE
BOOT
PHASE
LGATE
91 +VCCGT_PWM2_A
+VCCGT_UG2_D
PR96
0Ohm
tx_r0805_0ohm_h26
+VCCGT_UG2_R_D
PR98
2.2Ohm
tx_r0805_h26
+VCCGT_BOOT2_F
+VCCGT_BOOT2_D
+VCCGT_SW2_R
+VCCGT_LG2_D
PR100
0Ohm
tx_r0805_0ohm_h26
PC124
0.1UF/25V
mx_c0603
X7R/+/-10%
PR99
8.2KOHM
NI
PC122
1000PF/50V
X7R/+/-10%
+VCCGT_LG2_R_D
NI
PC127
1000PF/50V
X7R/+/-10%
+CPU_IN_R
PC125
3300PF/50V
PC126
22uF/16V
805
PC1254
10uF/16V
X7R/+/-10%
tx_c0805_t02_h55
PQ6A
FDPC5018SG
PQ6B
GND(LSS)_5
GND(LSS)_4
GND(LSS)_3
GND(LSS)_2
FDPC5018SG
+1.15V_VCCGT
PL7
0.15uH
+VCCGT_SW2
NI
PR101
4.7Ohm
mx_r1206
+VCCGT_SN2
NI
PC129
1000PF/50V
X7R/+/-10%
PC128
680PF/50V
X7R/+/-10%
PJP13
SHORTPIN
NOBOM
SHORTPIN
PJP14
SHORTPIN
NOBOM
SHORTPIN
91 +VCCGT_CSP2_A
91 +VCCGT_CSN2_A
<Variant Name>

PEGATRON Title : 095 VCCGT DRIVER 1-1

<OrgName> Engineer: Gary Chang

Size	Project Name	Rev
A3	<Doc>	1.02

Date: Tuesday, November 27, 2018 Sheet 95 of 110

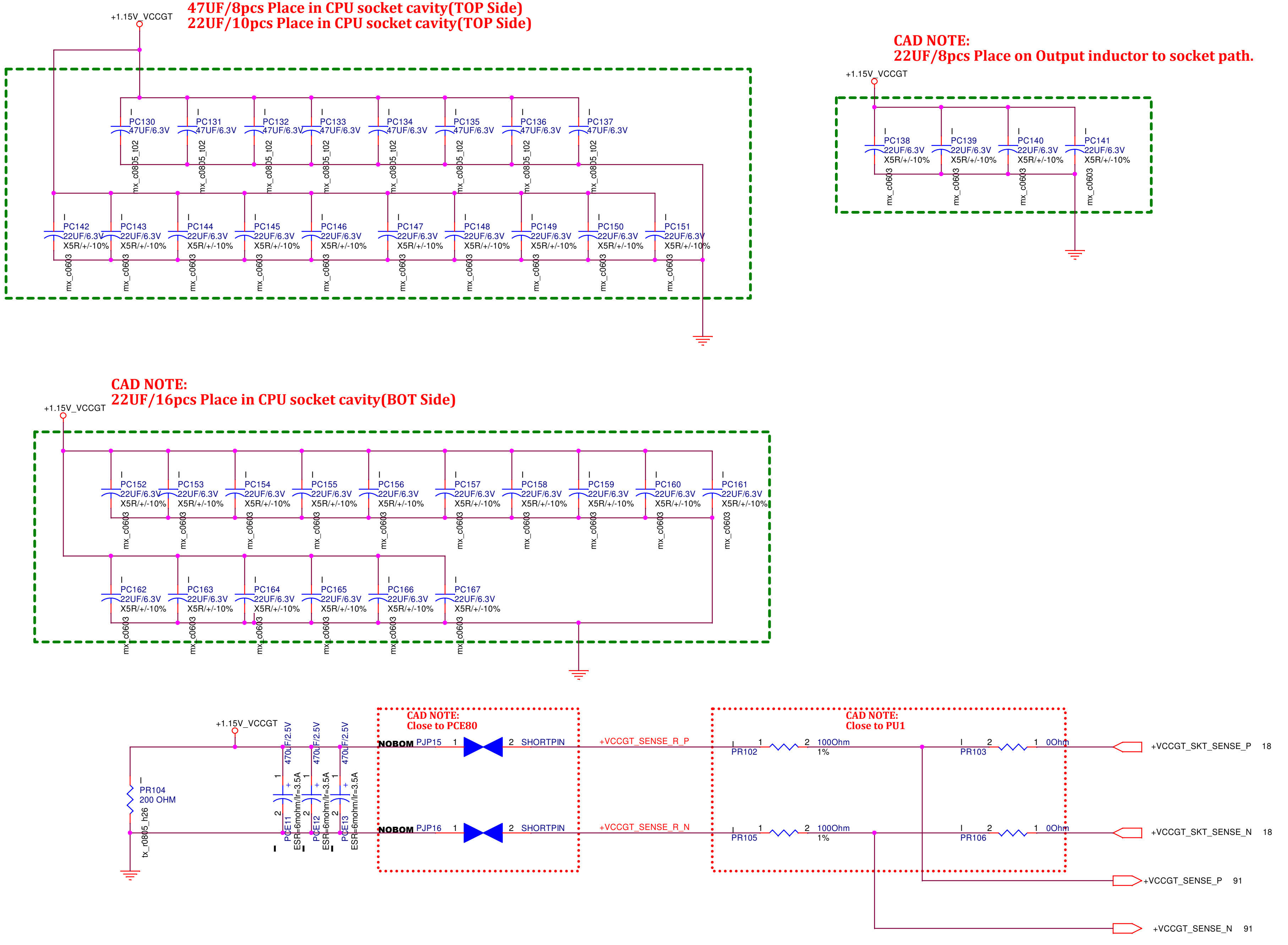
CAD NOTE:
47UF/8pcs Place in CPU socket cavity(TOP Side)
22UF/10pcs Place in CPU socket cavity(TOP Side)

CAD NOTE:
22UF/8pcs Place on Output inductor to socket path.

CAD NOTE:
22UF/16pcs Place in CPU socket cavity(BOT Side)

CAD NOTE:
Close to PCE80

CAD NOTE:
Close to PU1

+1.15V_VCCGT
PC130 47UF/6.3V mx_c0805_t02
PC131 47UF/6.3V mx_c0805_t02
PC132 47UF/6.3V mx_c0805_t02
PC133 47UF/6.3V mx_c0805_t02
PC134 47UF/6.3V mx_c0805_t02
PC135 47UF/6.3V mx_c0805_t02
PC136 47UF/6.3V mx_c0805_t02
PC137 47UF/6.3V mx_c0805_t02
PC142 22UF/6.3V X5R/+/-10% mx_c0603
PC143 22UF/6.3V X5R/+/-10% mx_c0603
PC144 22UF/6.3V X5R/+/-10% mx_c0603
PC145 22UF/6.3V X5R/+/-10% mx_c0603
PC146 22UF/6.3V X5R/+/-10% mx_c0603
PC147 22UF/6.3V X5R/+/-10% mx_c0603
PC148 22UF/6.3V X5R/+/-10% mx_c0603
PC149 22UF/6.3V X5R/+/-10% mx_c0603
PC150 22UF/6.3V X5R/+/-10% mx_c0603
PC151 22UF/6.3V X5R/+/-10% mx_c0603
+1.15V_VCCGT
PC138 22UF/6.3V X5R/+/-10% mx_c0603
PC139 22UF/6.3V X5R/+/-10% mx_c0603
PC140 22UF/6.3V X5R/+/-10% mx_c0603
PC141 22UF/6.3V X5R/+/-10% mx_c0603
+1.15V_VCCGT
PC152 22UF/6.3V X5R/+/-10% mx_c0603
PC153 22UF/6.3V X5R/+/-10% mx_c0603
PC154 22UF/6.3V X5R/+/-10% mx_c0603
PC155 22UF/6.3V X5R/+/-10% mx_c0603
PC156 22UF/6.3V X5R/+/-10% mx_c0603
PC157 22UF/6.3V X5R/+/-10% mx_c0603
PC158 22UF/6.3V X5R/+/-10% mx_c0603
PC159 22UF/6.3V X5R/+/-10% mx_c0603
PC160 22UF/6.3V X5R/+/-10% mx_c0603
PC161 22UF/6.3V X5R/+/-10% mx_c0603
PC162 22UF/6.3V X5R/+/-10% mx_c0603
PC163 22UF/6.3V X5R/+/-10% mx_c0603
PC164 22UF/6.3V X5R/+/-10% mx_c0603
PC165 22UF/6.3V X5R/+/-10% mx_c0603
PC166 22UF/6.3V X5R/+/-10% mx_c0603
PC167 22UF/6.3V X5R/+/-10% mx_c0603
+1.15V_VCCGT
PR104 200 OHM tx_r0805_h26
PCE11 470uF/2.5V ESR=6mohm/Ir=3.5A
PCE12 470uF/2.5V ESR=6mohm/Ir=3.5A
PCE13 470uF/2.5V ESR=6mohm/Ir=3.5A
NOBOM PJP15 1 2 SHORTPIN
NOBOM PJP16 1 2 SHORTPIN
+VCCGT_SENSE_R_P
+VCCGT_SENSE_R_N
PR102 1 2 100Ohm 1%
PR105 1 2 100Ohm 1%
PR103 2 1 0Ohm
PR106 2 1 0Ohm
+VCCGT_SKT_SENSE_P 18
+VCCGT_SKT_SENSE_N 18
+VCCGT_SENSE_P 91
+VCCGT_SENSE_N 91

<Variant Name>

PEGATRON Title : **096 VCCGT CAP**
<OrgName> Engineer: **Gary Chang**

Size	Project Name	Rev
A3	<Doc>	1.02

Date: Tuesday, November 27, 2018 Sheet 96 of 110

+VCCSA

Imax=11A
Itdc=10A
Irms=2.8A
LL=N/A
Fsw=500kHz
OCP=15A
Vripple=50mV

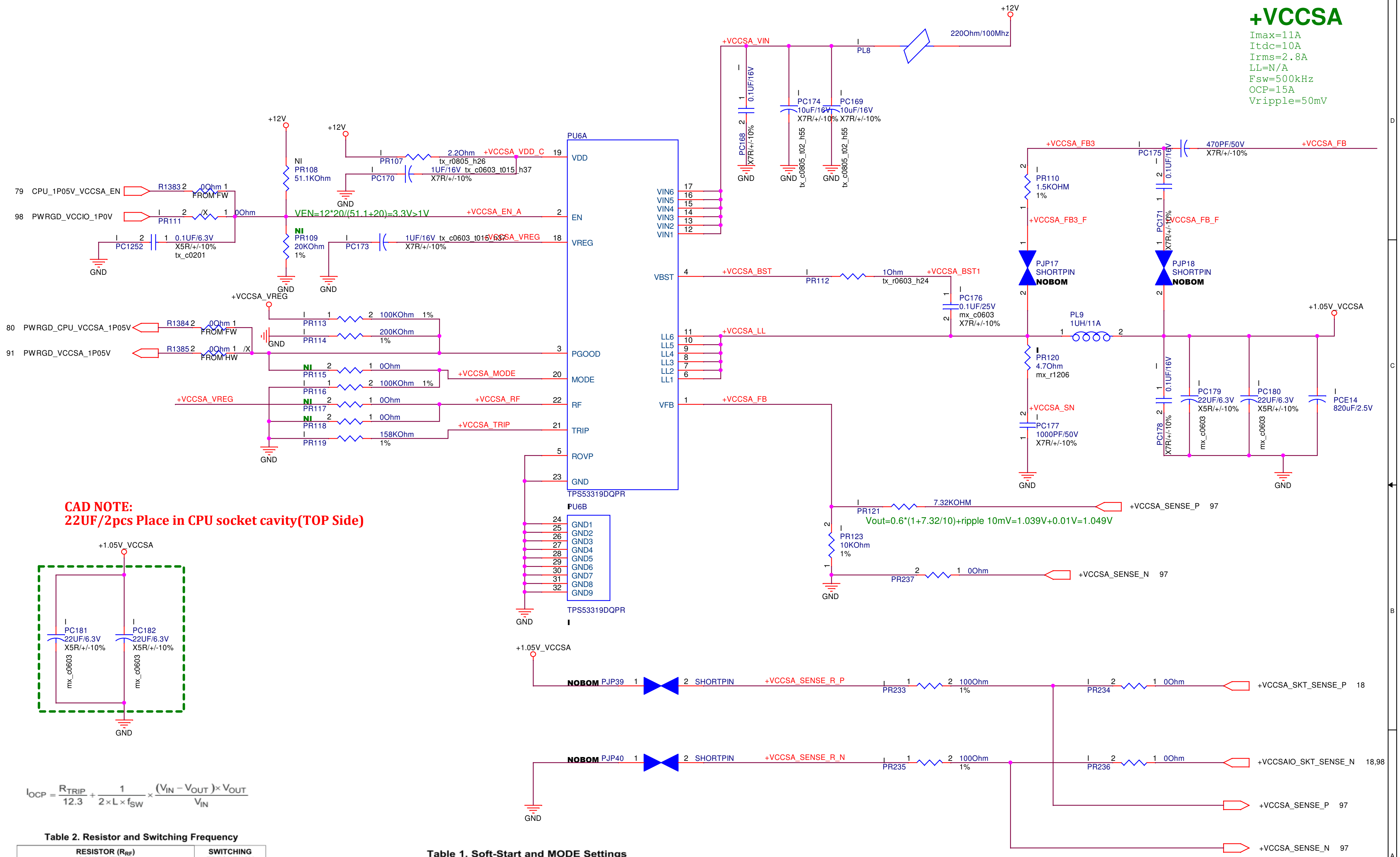
+12V
220Ohm/100Mhz
PL8
+VCCSA_VIN
PC168 0.1UF/16V X7R/+/-10%
PC174 10uF/16V X7R/+/-10% tx_c0805_t02_h55
PC169 10uF/16V X7R/+/-10% tx_c0805_t02_h55
GND
PU6A
+12V
NI PR108 51.1KOhm
PR107 2.2Ohm tx_r0805_h26
+VCCSA_VDD_C 19 VDD
PC170 1UF/16V tx_c0603_t015_h37 X7R/+/-10%
79 CPU_1P05V_VCCSA_EN
R1383 0Ohm FROM FW
98 PWRGD_VCCIO_1P0V
PR111 0Ohm
VEN=12*20/(51.1+20)=3.3V>1V
+VCCSA_EN_A 2 EN
PC1252 0.1UF/6.3V X5R/+/-10% tx_c0201
NI PR109 20KOhm 1%
PC173 1UF/16V tx_c0603_t015_h37 X7R/+/-10%
+VCCSA_VREG 18 VREG
VIN6 17 VIN5 16 VIN4 15 VIN3 14 VIN2 13 VIN1 12
VBST 4 +VCCSA_BST
PR112 1Ohm tx_r0603_h24
+VCCSA_BST1
PC176 0.1UF/25V mx_c0603 X7R/+/-10%
+VCCSA_FB3
PR110 1.5KOHM 1%
+VCCSA_FB3_F
PJP17 SHORTPIN NOBOM
PC175 0.1UF/16V
470PF/50V X7R/+/-10%
+VCCSA_FB
PC171 X7R/+/-10%
+VCCSA_FB_F
PJP18 SHORTPIN NOBOM
+VCCSA_VREG
80 PWRGD_CPU_VCCSA_1P05V
R1384 0Ohm FROM FW
PR113 100KOhm 1%
PR114 200KOhm 1%
91 PWRGD_VCCSA_1P05V
R1385 0Ohm FROM HW
3 PGOOD
NI PR115 0Ohm
PR116 100KOhm 1%
+VCCSA_MODE 20 MODE
+VCCSA_VREG
NI PR117 0Ohm
+VCCSA_RF 22 RF
NI PR118 0Ohm
PR119 158KOhm 1%
+VCCSA_TRIP 21 TRIP
5 ROVP
23 GND
TPS53319DQPR
LL6 11 LL5 10 LL4 9 LL3 8 LL2 7 LL1 6
+VCCSA_LL
PL9 1UH/11A
+1.05V_VCCSA
PR120 4.7Ohm mx_r1206
+VCCSA_SN
PC177 1000PF/50V X7R/+/-10%
PC178 0.1UF/16V X7R/+/-10%
PC179 22UF/6.3V X5R/+/-10% mx_c0603
PC180 22UF/6.3V X5R/+/-10% mx_c0603
PCE14 820uF/2.5V
VFB 1 +VCCSA_FB
PU6B
GND1 24 GND2 25 GND3 26 GND4 27 GND5 28 GND6 29 GND7 30 GND8 31 GND9 32
TPS53319DQPR
PR121 7.32KOHM
+VCCSA_SENSE_P 97
Vout=0.6*(1+7.32/10)+ripple 10mV=1.039V+0.01V=1.049V
PR123 10KOhm 1%
PR237 0Ohm
+VCCSA_SENSE_N 97
+1.05V_VCCSA
PC181 22UF/6.3V X5R/+/-10% mx_c0603
PC182 22UF/6.3V X5R/+/-10% mx_c0603
+1.05V_VCCSA
NOBOM PJP39 SHORTPIN
+VCCSA_SENSE_R_P
PR233 100Ohm 1%
PR234 0Ohm
+VCCSA_SKT_SENSE_P 18
NOBOM PJP40 SHORTPIN
+VCCSA_SENSE_R_N
PR235 100Ohm 1%
PR236 0Ohm
+VCCSAIO_SKT_SENSE_N 18,98
+VCCSA_SENSE_P 97
+VCCSA_SENSE_N 97

CAD NOTE:
22UF/2pcs Place in CPU socket cavity(TOP Side)

$$I_{OCP} = \frac{R_{TRIP}}{12.3} + \frac{1}{2\times L\times f_{SW}} \times \frac{(V_{IN}-V_{OUT})\times V_{OUT}}{V_{IN}}$$

Table 2. Resistor and Switching Frequency

RESISTOR (R_{RF}) CONNECTIONS		SWITCHING FREQUENCY (f_{SW}) (kHz)
VALUE (kΩ)	CONNECT TO	
0	GND	250
187	GND	300
619	GND	400
OPEN	n/a	500
866	VREG	600
309	VREG	750
124	VREG	850
0	VREG	970

Table 1. Soft-Start and MODE Settings

MODE SELECTION	ACTION	SOFT-START TIME (ms)	R_{MODE} (kΩ)
Auto Skip	Pull down to GND	0.7	39
		1.4	100
		2.8	200
		5.6	475
Forced CCM(1)	Connect to PGOOD	0.7	39
		1.4	100
		2.8	200
		5.6	475

<Variant Name>

PEGATRON
Title : 097 VCCSA
<OrgName>
Engineer: Gary Chang
Size A3
Project Name <Doc>
Rev 1.02
Date: Tuesday, November 27, 2018
Sheet 97 of 110

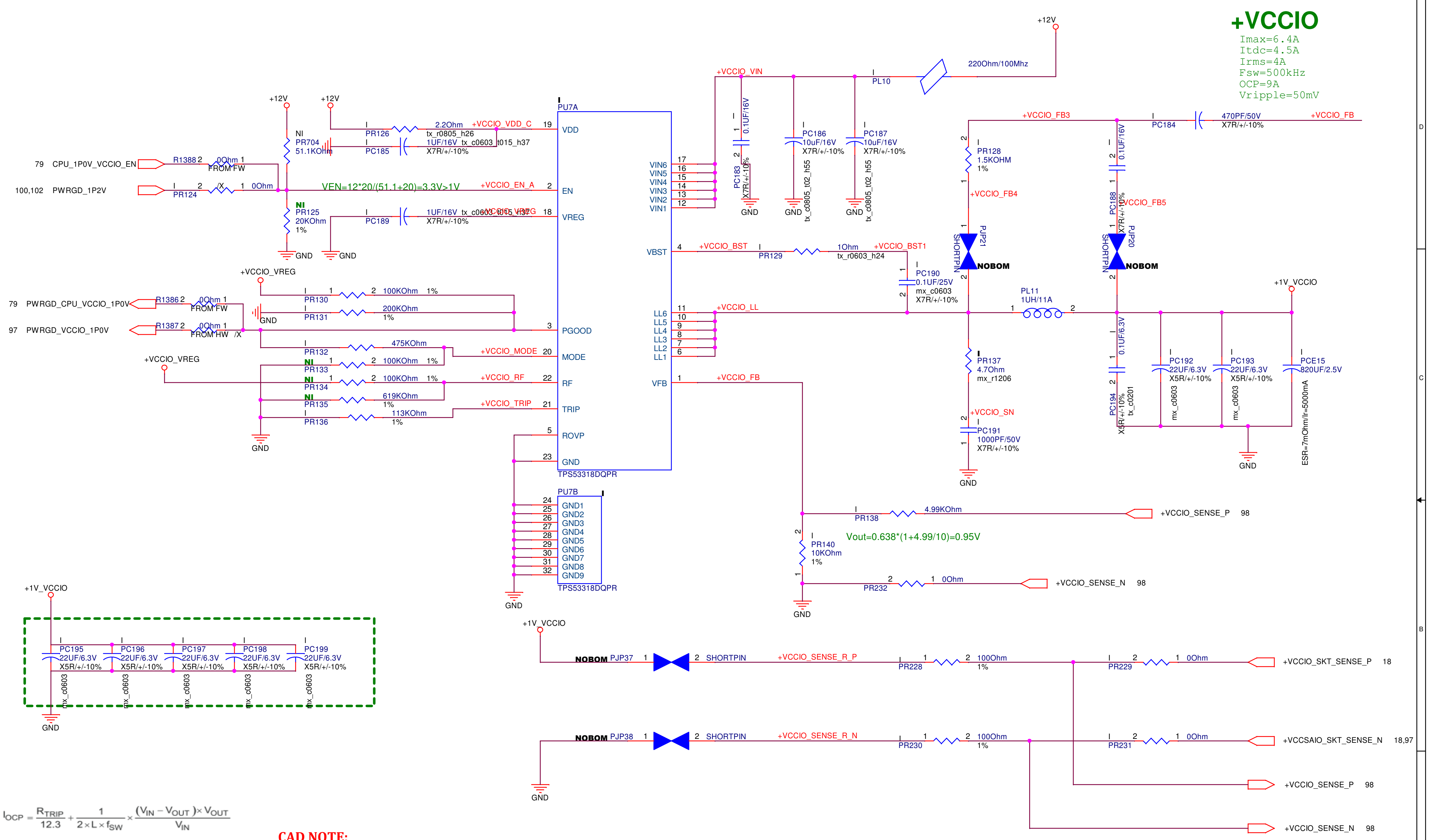
+VCCIO
Imax=6.4A
Itdc=4.5A
Irms=4A
Fsw=500kHz
OCP=9A
Vripple=50mV
+12V
+12V
+12V
79 CPU_1P0V_VCCIO_EN
R1388 2 0Ohm 1 FROM FW
100,102 PWRGD_1P2V
PR124 2 /X 1 0Ohm
NI PR704 51.1KOhm
NI PR125 20KOhm 1%
PR126 2.2Ohm tx_r0805_h26
+VCCIO_VDD_C 19 VDD
PC185 1UF/16V tx_c0603_t015_h37 X7R/+/-10%
VEN=12*20/(51.1+20)=3.3V>1V
+VCCIO_EN_A 2 EN
PC189 1UF/16V tx_c0603_t015_h37 X7R/+/-10%
+VCCIO_VREG 18 VREG
GND
+VCCIO_VREG
79 PWRGD_CPU_VCCIO_1P0V
R1386 2 0Ohm 1 FROM FW
97 PWRGD_VCCIO_1P0V
R1387 2 0Ohm 1 FROM HW /X
PR130 1 2 100KOhm 1%
PR131 200KOhm 1%
3 PGOOD
PR132 475KOhm
+VCCIO_MODE 20 MODE
NI PR133 1 2 100KOhm 1%
NI PR134 1 2 100KOhm 1%
+VCCIO_RF 22 RF
NI PR135 619KOhm 1%
PR136 113KOhm 1%
+VCCIO_TRIP 21 TRIP
5 ROVP
23 GND
PU7A
TPS53318DQPR
PU7B
24 GND1
25 GND2
26 GND3
27 GND4
28 GND5
29 GND6
30 GND7
31 GND8
32 GND9
TPS53318DQPR
+VCCIO_VIN
PL10 220Ohm/100Mhz
17 VIN6
16 VIN5
15 VIN4
14 VIN3
13 VIN2
12 VIN1
PC183 0.1UF/16V X7R/+/-10%
PC186 10uF/16V X7R/+/-10% tx_c0805_t02_h55
PC187 10uF/16V X7R/+/-10% tx_c0805_t02_h55
4 VBST +VCCIO_BST
PR129 1Ohm tx_r0603_h24 +VCCIO_BST1
PC190 0.1UF/25V mx_c0603 X7R/+/-10%
11 LL6
10 LL5
9 LL4
8 LL3
7 LL2
6 LL1
+VCCIO_LL
PL11 1UH/11A
1 VFB +VCCIO_FB
+VCCIO_FB3
PC184 470PF/50V X7R/+/-10%
+VCCIO_FB
PR128 1.5KOHM 1%
+VCCIO_FB4
PJP21 SHORTPIN NOBOM
PC188 0.1UF/16V X7R/+/-10%
+VCCIO_FB5
PJP20 SHORTPIN NOBOM
PR137 4.7Ohm mx_r1206
+VCCIO_SN
PC191 1000PF/50V X7R/+/-10%
+1V_VCCIO
PC194 0.1UF/6.3V X5R/+/-10% tx_c0201
PC192 22UF/6.3V X5R/+/-10% mx_c0603
PC193 22UF/6.3V X5R/+/-10% mx_c0603
PCE15 820UF/2.5V ESR=7mOhm/Ir=5000mA
PR138 4.99KOhm
+VCCIO_SENSE_P 98
Vout=0.638*(1+4.99/10)=0.95V
PR140 10KOhm 1%
PR232 2 1 0Ohm
+VCCIO_SENSE_N 98
+1V_VCCIO
PC195 22UF/6.3V X5R/+/-10% mx_c0603
PC196 22UF/6.3V X5R/+/-10% mx_c0603
PC197 22UF/6.3V X5R/+/-10% mx_c0603
PC198 22UF/6.3V X5R/+/-10% mx_c0603
PC199 22UF/6.3V X5R/+/-10% mx_c0603
+1V_VCCIO
NOBOM PJP37 1 2 SHORTPIN
+VCCIO_SENSE_R_P
PR228 1 2 100Ohm 1%
PR229 2 1 0Ohm
+VCCIO_SKT_SENSE_P 18
NOBOM PJP38 1 2 SHORTPIN
+VCCIO_SENSE_R_N
PR230 1 2 100Ohm 1%
PR231 2 1 0Ohm
+VCCSAIO_SKT_SENSE_N 18,97
+VCCIO_SENSE_P 98
+VCCIO_SENSE_N 98

$$I_{OCP} = \frac{R_{TRIP}}{12.3} + \frac{1}{2 \times L \times f_{SW}} \times \frac{(V_{IN} - V_{OUT}) \times V_{OUT}}{V_{IN}}$$

CAD NOTE:
22UF/2pcs Place in CPU socket cavity(TOP Side)

Table 1. Soft-Start and MODE Settings

MODE SELECTION	ACTION	SOFT-START TIME (ms)	R_{MODE} (kΩ)
Auto Skip	Pull down to GND	0.7	39
		1.4	100
		2.8	200
		5.6	475
Forced CCM(1)	Connect to PGOOD	0.7	39
		1.4	100
		2.8	200
		5.6	475

Table 2. Resistor and Switching Frequency

RESISTOR (R_{RF}) CONNECTIONS		SWITCHING FREQUENCY (f_{SW}) (kHz)
VALUE (kΩ)	CONNECT TO	
0	GND	250
187	GND	300
619	GND	400
OPEN	n/a	500
866	VREG	600
309	VREG	750
124	VREG	850
0	VREG	970

<Variant Name>

PEGATRON
Title : 098 VCCIO
<OrgName>
Engineer: Gary Chang
Size: A3
Project Name: <Doc>
Rev: 1.02
Date: Tuesday, November 27, 2018
Sheet 98 of 110

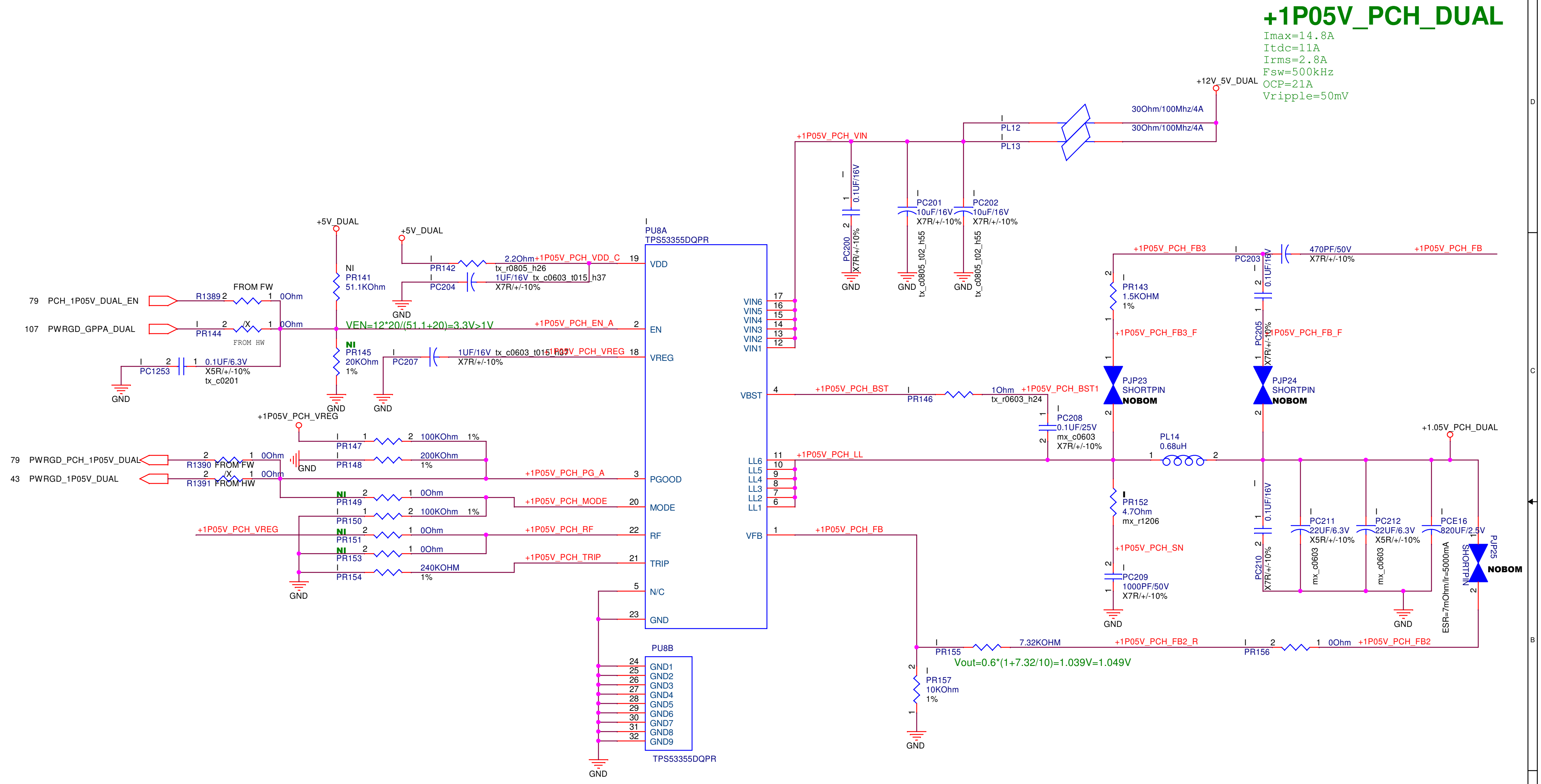
+1P05V_PCH_DUAL
Imax=14.8A
Itdc=11A
Irms=2.8A
Fsw=500kHz
OCP=21A
Vripple=50mV
+12V_5V_DUAL
PL12
PL13
30Ohm/100Mhz/4A
30Ohm/100Mhz/4A
+1P05V_PCH_VIN
PC200 0.1UF/16V X7R/+/-10%
PC201 10uF/16V X7R/+/-10% tx_c0805_t02_h55
PC202 10uF/16V X7R/+/-10% tx_c0805_t02_h55
GND
+5V_DUAL
PR141 51.1KOhm NI
PR142 2.2Ohm tx_r0805_h26
+1P05V_PCH_VDD_C
PC204 1UF/16V tx_c0603_t015_h37 X7R/+/-10%
PU8A TPS53355DQPR
VDD
EN
VREG
VBST
PGOOD
MODE
RF
TRIP
N/C
GND
VIN6 VIN5 VIN4 VIN3 VIN2 VIN1
LL6 LL5 LL4 LL3 LL2 LL1
VFB
79 PCH_1P05V_DUAL_EN
R1389 0Ohm FROM FW
107 PWRGD_GPPA_DUAL
PR144 0Ohm FROM HW
VEN=12*20/(51.1+20)=3.3V>1V
+1P05V_PCH_EN_A
PC1253 0.1UF/6.3V X5R/+/-10% tx_c0201
PR145 20KOhm 1% NI
PC207 1UF/16V tx_c0603_t015_h37 X7R/+/-10%
+1P05V_PCH_VREG
+1P05V_PCH_BST
PR146 1Ohm tx_r0603_h24
+1P05V_PCH_BST1
PC208 0.1UF/25V mx_c0603 X7R/+/-10%
+1P05V_PCH_FB3
PC203 470PF/50V X7R/+/-10%
+1P05V_PCH_FB
PR143 1.5KOHM 1%
+1P05V_PCH_FB3_F
PC205 0.1UF/16V X7R/+/-10%
+1P05V_PCH_FB_F
PJP23 SHORTPIN NOBOM
PJP24 SHORTPIN NOBOM
+1.05V_PCH_DUAL
PL14 0.68uH
+1P05V_PCH_LL
PR152 4.7Ohm mx_r1206
+1P05V_PCH_SN
PC209 1000PF/50V X7R/+/-10%
PC210 0.1UF/16V X7R/+/-10%
PC211 22UF/6.3V X5R/+/-10% mx_c0603
PC212 22UF/6.3V X5R/+/-10% mx_c0603
PCE16 820UF/2.5V ESR=7mOhm/Ir=5000mA
PJP25 SHORTPIN NOBOM
79 PWRGD_PCH_1P05V_DUAL
R1390 0Ohm FROM FW
43 PWRGD_1P05V_DUAL
R1391 0Ohm FROM HW
PR147 100KOhm 1%
PR148 200KOhm 1%
+1P05V_PCH_PG_A
PR149 0Ohm NI
PR150 100KOhm 1%
+1P05V_PCH_MODE
PR151 0Ohm NI
PR153 0Ohm NI
+1P05V_PCH_RF
PR154 240KOHM 1%
+1P05V_PCH_TRIP
+1P05V_PCH_FB
PR155 7.32KOHM
+1P05V_PCH_FB2_R
PR156 0Ohm
+1P05V_PCH_FB2
Vout=0.6*(1+7.32/10)=1.039V=1.049V
PR157 10KOhm 1%
PU8B TPS53355DQPR
GND1 GND2 GND3 GND4 GND5 GND6 GND7 GND8 GND9

$$I_{OCP} = \frac{R_{TRIP}}{12.3} + \frac{1}{2 \times L \times f_{SW}} \times \frac{(V_{IN} - V_{OUT}) \times V_{OUT}}{V_{IN}}$$

Table 2. Resistor and Switching Frequency

RESISTOR (R_{RF}) CONNECTIONS		SWITCHING FREQUENCY (f_{SW}) (kHz)
VALUE (kΩ)	CONNECT TO	
0	GND	250
187	GND	300
619	GND	400
OPEN	n/a	500
866	VREG	600
309	VREG	750
124	VREG	850
0	VREG	970

Table 1. Soft-Start and MODE Settings

MODE SELECTION	ACTION	SOFT-START TIME (ms)	R_{MODE} (kΩ)
Auto Skip	Pull down to GND	0.7	39
		1.4	100
		2.8	200
		5.6	475
Forced CCM(1)	Connect to PGOOD	0.7	39
		1.4	100
		2.8	200
		5.6	475

<Variant Name>

PEGATRON Title : 099 1P05V_PCH_DUAL

<OrgName> Engineer: Gary Chang

Size	Project Name	Rev
A3	<Doc>	1.02

Date: Tuesday, November 27, 2018 Sheet 99 of 110

+VDDQ

Imax=11.6A
Itdc=8.12A
Irms=2.8A
LL=N/A
Fsw=500kHz
OCP=16.5A
Vripple=50mV

+VTT_DDR

Imax: 0.73A
TDC: 0.5A

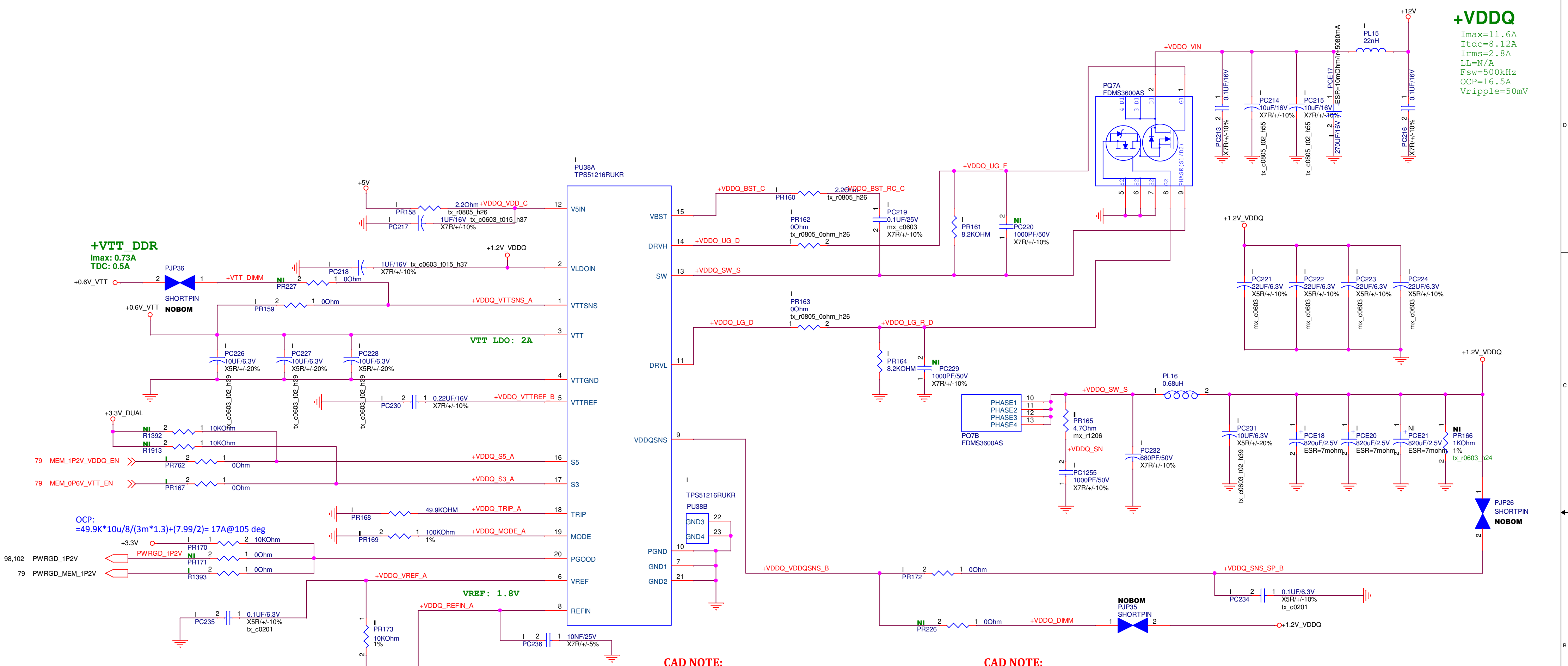

PU38A
TPS51216RUKR
V5IN
VLDOIN
VTTSNS
VTT
VTTGND
VTTREF
S5
S3
TRIP
MODE
PGOOD
VREF
REFIN
VBST
DRVH
SW
DRVL
VDDQSNS
PGND
GND1
GND2
PU38B
TPS51216RUKR
GND3
GND4
PQ7A
FDMS3600AS
PQ7B
FDMS3600AS
PHASE1
PHASE2
PHASE3
PHASE4
PL15
22nH
PL16
0.68uH
+12V
+5V
+1.2V_VDDQ
+0.6V_VTT
+3.3V_DUAL
+3.3V
+VDDQ_VIN
+VDDQ_VDD_C
+VDDQ_BST_C
+VDDQ_BST_RC_C
+VDDQ_UG_F
+VDDQ_UG_D
+VDDQ_SW_S
+VDDQ_LG_D
+VDDQ_LG_R_D
+VDDQ_SN
+VDDQ_VTTSNS_A
+VDDQ_VTTREF_B
+VDDQ_S5_A
+VDDQ_S3_A
+VDDQ_TRIP_A
+VDDQ_MODE_A
+VDDQ_VREF_A
+VDDQ_REFIN_A
+VDDQ_VDDQSNS_B
+VDDQ_SNS_SP_B
+VDDQ_DIMM
+VTT_DIMM
PWRGD_1P2V
79 MEM_1P2V_VDDQ_EN
79 MEM_0P6V_VTT_EN
98,102 PWRGD_1P2V
79 PWRGD_MEM_1P2V
PJP36
SHORTPIN
NOBOM
PJP26
SHORTPIN
NOBOM
NOBOM
PJP35
SHORTPIN
PR158 2.2Ohm tx_r0805_h26
PC217 1UF/16V tx_c0603_t015_h37 X7R/+/-10%
PC218 1UF/16V tx_c0603_t015_h37 X7R/+/-10%
NI PR227 0Ohm
PR159 0Ohm
PC226 10UF/6.3V X5R/+/-20% tx_c0603_t02_h39
PC227 10UF/6.3V X5R/+/-20% tx_c0603_t02_h39
PC228 10UF/6.3V X5R/+/-20% tx_c0603_t02_h39
PC230 0.22UF/16V X7R/+/-10%
NI R1392 10KOhm
NI R1913 10KOhm
PR762 0Ohm
PR167 0Ohm
PR168 49.9KOHM
PR169 100KOhm 1%
PR170 10KOhm
NI PR171 0Ohm
R1393 0Ohm
PC235 0.1UF/6.3V X5R/+/-10% tx_c0201
PR173 10KOhm 1%
PR174 21KOhm 1%
PC236 10NF/25V X7R/+/-5%
PR160 2.2Ohm tx_r0805_h26
PC219 0.1UF/25V mx_c0603 X7R/+/-10%
PR162 0Ohm tx_r0805_0ohm_h26
PR163 0Ohm tx_r0805_0ohm_h26
PR161 8.2KOHM
NI PC220 1000PF/50V X7R/+/-10%
PR164 8.2KOHM
NI PC229 1000PF/50V X7R/+/-10%
PC213 0.1UF/16V X7R/+/-10%
PC214 10uF/16V X7R/+/-10% tx_c0805_t02_h55
PC215 10uF/16V X7R/+/-10% tx_c0805_t02_h55
PCE17 270UF/16V ESR=10mOhm/Ir=5080mA
PC216 0.1UF/16V X7R/+/-10%
PC221 22UF/6.3V X5R/+/-10% mx_c0603
PC222 22UF/6.3V X5R/+/-10% mx_c0603
PC223 22UF/6.3V X5R/+/-10% mx_c0603
PC224 22UF/6.3V X5R/+/-10% mx_c0603
PR165 4.7Ohm mx_r1206
PC1255 1000PF/50V X7R/+/-10%
PC232 680PF/50V X7R/+/-10%
PC231 10UF/6.3V X5R/+/-20% tx_c0603_t02_h39
PCE18 820uF/2.5V ESR=7mohm
PCE20 820uF/2.5V ESR=7mohm
NI PCE21 820uF/2.5V ESR=7mohm
NI PR166 1KOhm 1% tx_r0603_h24
PR172 0Ohm
PC234 0.1UF/6.3V X5R/+/-10% tx_c0201
NI PR226 0Ohm

VTT LDO: 2A

VREF: 1.8V

OCP:
=49.9K*10u/8/(3m*1.3)+(7.99/2)= 17A@105 deg

Vout=1.8*(R2/(R1+R2))=1.8*(21k/31k)=1.22V

	+1P2V_DUAL OCP point	Low Limit	High Limit
	35.24A@25 deg 28.03A@105 deg	16A	35.24A @L=0.32uH
	35.24A@25 deg 28.03A@105 deg	16A	35.24A @L=0.32uH

CAD NOTE:
22UF/4pcs placed near the CPU side, bottom layer

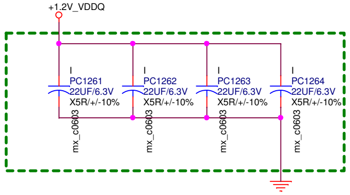

+1.2V_VDDQ
PC1261 22UF/6.3V X5R/+/-10% mx_c0603
PC1262 22UF/6.3V X5R/+/-10% mx_c0603
PC1263 22UF/6.3V X5R/+/-10% mx_c0603
PC1264 22UF/6.3V X5R/+/-10% mx_c0603

CAD NOTE:
22UF/15pcs placed between DIMM slots

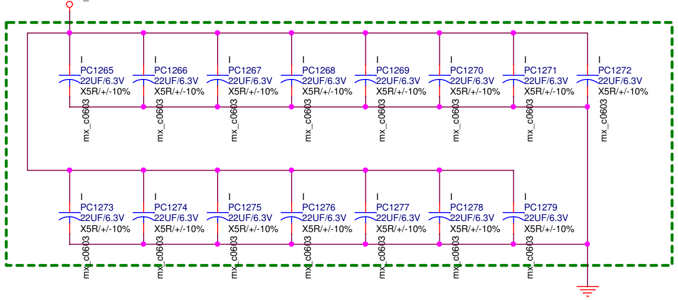

+1.2V_VDDQ
PC1265 22UF/6.3V X5R/+/-10% mx_c0603
PC1266 22UF/6.3V X5R/+/-10% mx_c0603
PC1267 22UF/6.3V X5R/+/-10% mx_c0603
PC1268 22UF/6.3V X5R/+/-10% mx_c0603
PC1269 22UF/6.3V X5R/+/-10% mx_c0603
PC1270 22UF/6.3V X5R/+/-10% mx_c0603
PC1271 22UF/6.3V X5R/+/-10% mx_c0603
PC1272 22UF/6.3V X5R/+/-10% mx_c0603
PC1273 22UF/6.3V X5R/+/-10% mx_c0603
PC1274 22UF/6.3V X5R/+/-10% mx_c0603
PC1275 22UF/6.3V X5R/+/-10% mx_c0603
PC1276 22UF/6.3V X5R/+/-10% mx_c0603
PC1277 22UF/6.3V X5R/+/-10% mx_c0603
PC1278 22UF/6.3V X5R/+/-10% mx_c0603
PC1279 22UF/6.3V X5R/+/-10% mx_c0603

CAD NOTE:
22UF/4pcs placed near the CPU side, bottom layer

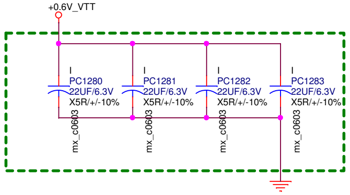

+0.6V_VTT
PC1280 22UF/6.3V X5R/+/-10% mx_c0603
PC1281 22UF/6.3V X5R/+/-10% mx_c0603
PC1282 22UF/6.3V X5R/+/-10% mx_c0603
PC1283 22UF/6.3V X5R/+/-10% mx_c0603

Table 2. MODE Selection

No.	Resistance between MODE and GND	Frequency	Discharge Mode
3	200kΩ	400kHz	Tracking Discharge
2	100kΩ	300kHz	
1	68kΩ	300kHz	Non-tracking Discharge
0	47kΩ	400kHz	

Table 1. S3/S5 Power State Control

STATE	S3	S5	VREF	VDDQ	VTTREF	VTT
S0	HI	HI	ON	ON	ON	ON
S3	LO	HI	ON	ON	ON	OFF(High-Z)
S4/S5	LO	LO	OFF	OFF(Discharge)	OFF(Discharge)	OFF(Discharge)

<Variant Name>
PEGATRON
Title : 100 VDDQ & VTT
<OrgName>
Engineer: Gary Chang
Size: Custom
Project Name: <Doc>
Rev: 1.02
Date: Tuesday, November 27, 2018
Sheet 100 of 110

+2P5V_VPP

Iin=1.244A
Imax=2.24A
Irms=0.9A
Fsw=1MHz
OCP=4.5A
Vripple=50mV

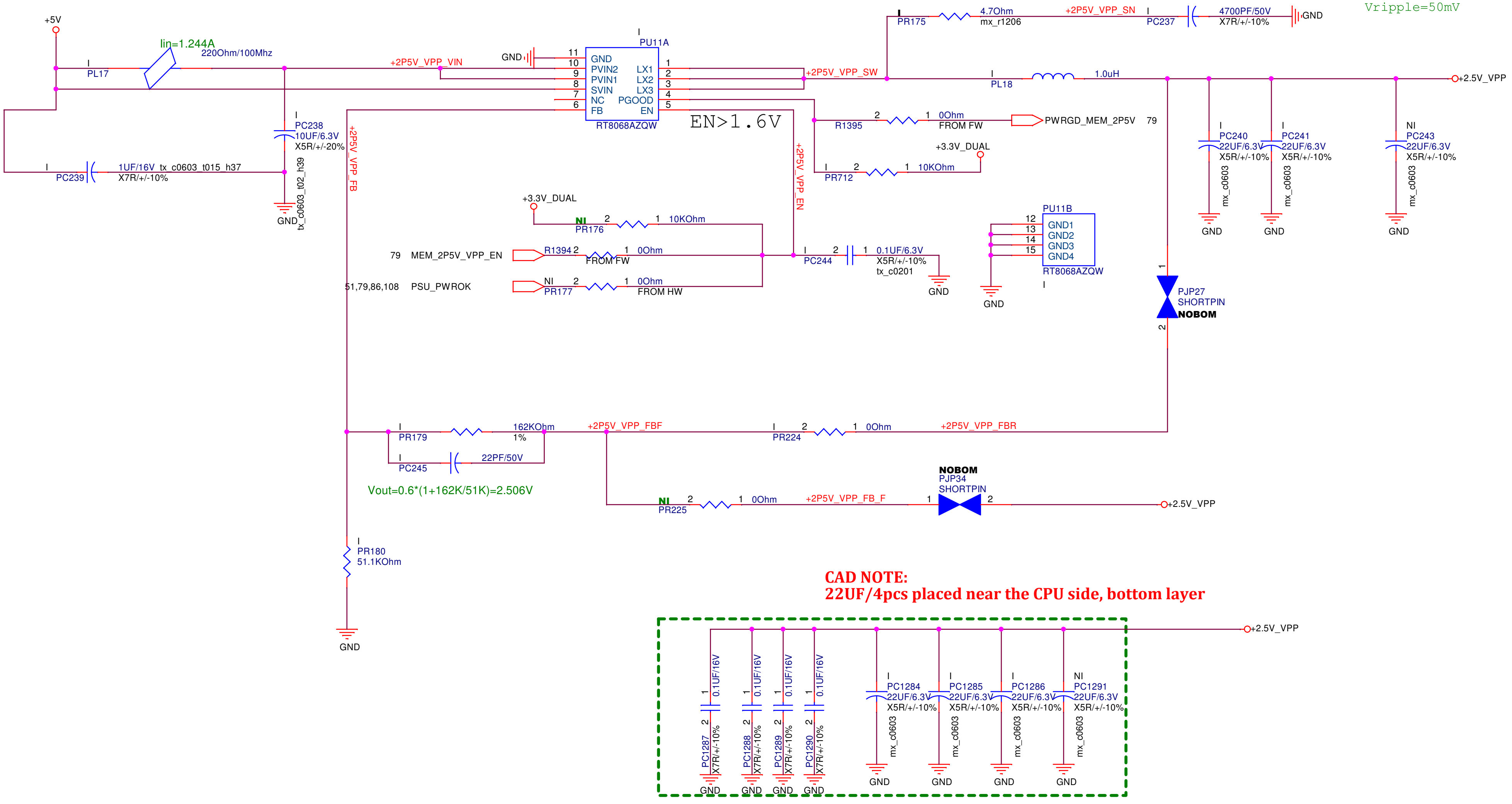
+5V
PL17
Iin=1.244A
220Ohm/100Mhz
+2P5V_VPP_VIN
GND
PU11A
GND
PVIN2
PVIN1
SVIN
NC
FB
LX1
LX2
LX3
PGOOD
EN
RT8068AZQW
11
10
9
8
7
6
1
2
3
4
5
EN>1.6V
+2P5V_VPP_SW
PR175
4.7Ohm
mx_r1206
+2P5V_VPP_SN
PC237
4700PF/50V
X7R/+/-10%
GND
PL18
1.0uH
+2.5V_VPP
PC238
10UF/6.3V
X5R/+/-20%
tx_c0603_t02_h39
GND
PC239
1UF/16V_tx_c0603_t015_h37
X7R/+/-10%
+2P5V_VPP_FB
+2P5V_VPP_EN
R1395
0Ohm
FROM FW
PWRGD_MEM_2P5V 79
+3.3V_DUAL
PR712
10KOhm
PC240
22UF/6.3V
X5R/+/-10%
mx_c0603
PC241
22UF/6.3V
X5R/+/-10%
mx_c0603
NI
PC243
22UF/6.3V
X5R/+/-10%
mx_c0603
GND
+3.3V_DUAL
NI
PR176
10KOhm
79 MEM_2P5V_VPP_EN
R1394
0Ohm
FROM FW
PC244
0.1UF/6.3V
X5R/+/-10%
tx_c0201
GND
51,79,86,108 PSU_PWROK
NI
PR177
0Ohm
FROM HW
PU11B
GND1
GND2
GND3
GND4
12
13
14
15
RT8068AZQW
GND
PJP27
SHORTPIN
NOBOM
PR179
162KOhm
1%
+2P5V_VPP_FBF
PR224
0Ohm
+2P5V_VPP_FBR
PC245
22PF/50V
Vout=0.6*(1+162K/51K)=2.506V
NI
PR225
0Ohm
+2P5V_VPP_FB_F
NOBOM
PJP34
SHORTPIN
+2.5V_VPP
PR180
51.1KOhm
GND
+2.5V_VPP
PC1287
0.1UF/16V
X7R/+/-10%
PC1288
0.1UF/16V
X7R/+/-10%
PC1289
0.1UF/16V
X7R/+/-10%
PC1290
0.1UF/16V
X7R/+/-10%
PC1284
22UF/6.3V
X5R/+/-10%
mx_c0603
PC1285
22UF/6.3V
X5R/+/-10%
mx_c0603
PC1286
22UF/6.3V
X5R/+/-10%
mx_c0603
NI
PC1291
22UF/6.3V
X5R/+/-10%
mx_c0603
GND

CAD NOTE:
22UF/4pcs placed near the CPU side, bottom layer

<Variant Name>

PEGATRON Title : 101 VPP
<OrgName> Engineer: Gary Chang
Size A3
Project Name <Doc>
Rev 1.02
Date: Tuesday, November 27, 2018
Sheet 101 of 110

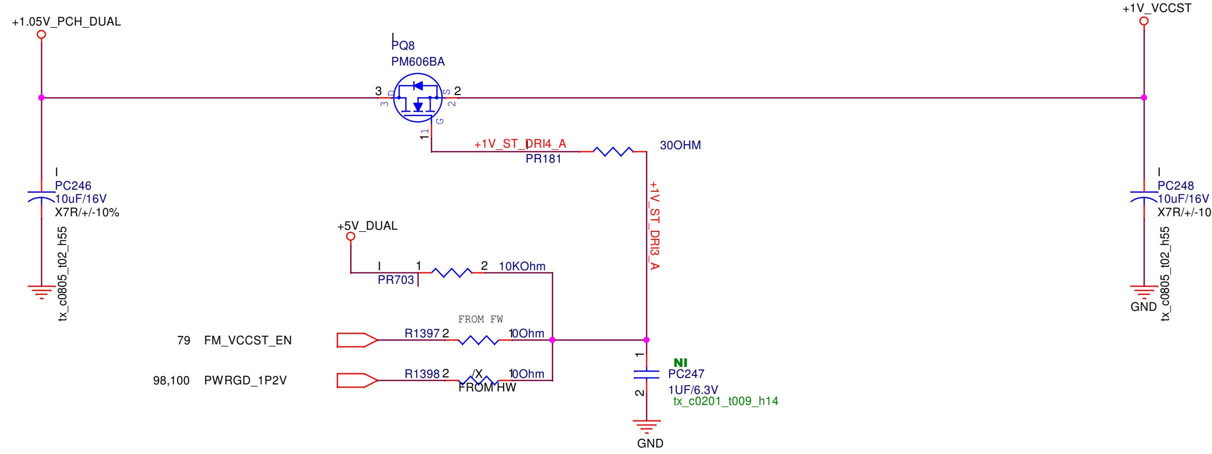
+1.05V_PCH_DUAL
PQ8
PM606BA
3
2
D
S
G
11
+1V_ST_DRI4_A
PR181
30OHM
+1V_VCCST
PC246
10uF/16V
X7R/+/-10%
tx_c0805_t02_h55
PC248
10uF/16V
X7R/+/-10%
GND
tx_c0805_t02_h55
+1V_ST_DRI3_A
+5V_DUAL
PR703
1
2
10KOhm
FROM FW
79
FM_VCCST_EN
R1397
2
1
0Ohm
98,100
PWRGD_1P2V
R1398
2
/X
1
0Ohm
FROM HW
NI
PC247
1UF/6.3V
tx_c0201_t009_h14
1
2
GND

+VCCST

Imax=0.3A
Itdc=0.21A
Vdroop=31m*0.3A=09.5mV
Pd=0.3^2*31m=2.8mW

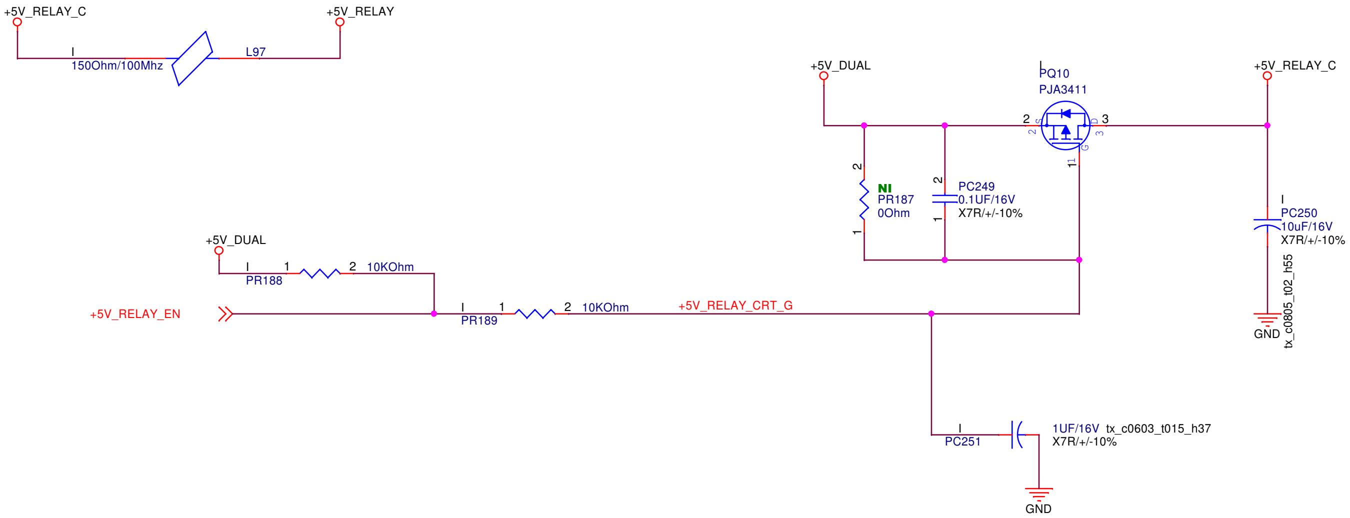
+5V_RELAY_C
+5V_RELAY
150Ohm/100Mhz
L97
+5V_DUAL
PQ10
PJA3411
2
3
S
D
G
11
+5V_RELAY_C
NI
PR187
0Ohm
2
1
PC249
0.1UF/16V
X7R/+/-10%
2
1
PC250
10uF/16V
X7R/+/-10%
tx_c0805_t02_h55
GND
+5V_DUAL
PR188
1
2
10KOhm
+5V_RELAY_EN
PR189
1
2
10KOhm
+5V_RELAY_CRT_G
PC251
1UF/16V
tx_c0603_t015_h37
X7R/+/-10%
GND

+5V_RELAY

Imax=1.03A
Itdc=0.7A
Vdroop=100m*1.03A=0.1V
Pd=1^2*100m=0.1W

<Variant Name>

PEGATRON
Title : 102 VCCST & 5V_RELAY
<OrgName>
Engineer: Gary Chang

Size	Project Name	Rev
A3	<Doc>	1.02

Date: Tuesday, November 27, 2018 Sheet 102 of 110

+3P3V_DAUL

Imax=10A
Itdc=7A
Irms=4.7A
LL=N/A
Fsw=500kHz
OCP=15A
Vripple=50mV

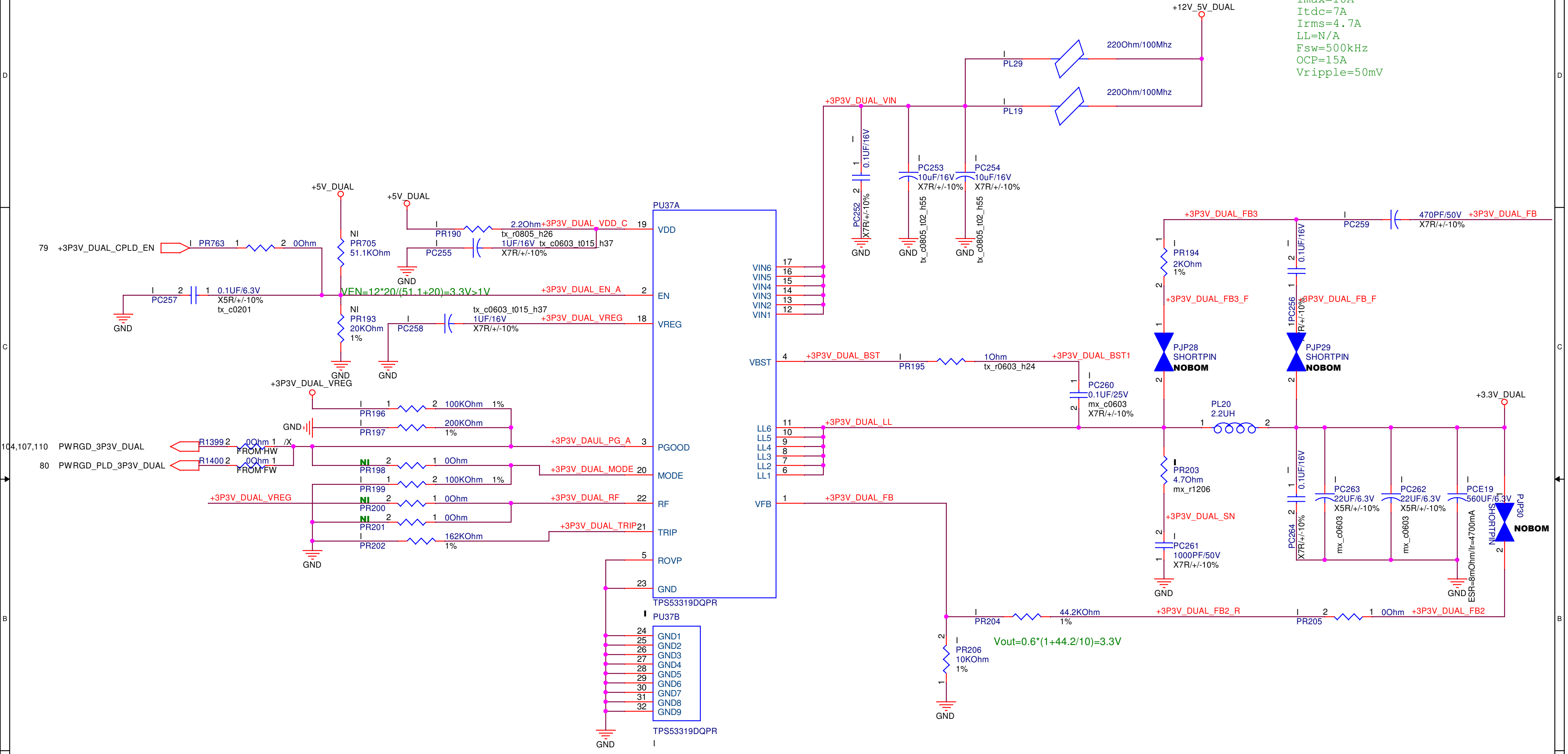

+12V_5V_DUAL
PL29
220Ohm/100Mhz
PL19
220Ohm/100Mhz
+3P3V_DUAL_VIN
PC252
0.1UF/16V
X7R/+/-10%
PC253
10uF/16V
X7R/+/-10%
tx_c0805_t02_h55
PC254
10uF/16V
X7R/+/-10%
tx_c0805_t02_h55
GND
+5V_DUAL
NI
PR705
51.1KOhm
+5V_DUAL
PR190
2.2Ohm
+3P3V_DUAL_VDD_C
tx_r0805_h26
PC255
1UF/16V
tx_c0603_t015_h37
X7R/+/-10%
79
+3P3V_DUAL_CPLD_EN
PR763
0Ohm
PC257
0.1UF/6.3V
X5R/+/-10%
tx_c0201
VEN=12*20/(51.1+20)=3.3V>1V
+3P3V_DUAL_EN_A
NI
PR193
20KOhm
1%
PC258
tx_c0603_t015_h37
1UF/16V
X7R/+/-10%
+3P3V_DUAL_VREG
PU37A
VDD
EN
VREG
VBST
PGOOD
MODE
RF
TRIP
ROVP
GND
VIN6
VIN5
VIN4
VIN3
VIN2
VIN1
LL6
LL5
LL4
LL3
LL2
LL1
VFB
TPS53319DQPR
+3P3V_DUAL_VREG
PR196
100KOhm
1%
PR197
200KOhm
1%
104,107,110
PWRGD_3P3V_DUAL
80
PWRGD_PLD_3P3V_DUAL
PR1399
0Ohm
FROM HW
PR1400
0Ohm
FROM FW
+3P3V_DAUL_PG_A
NI
PR198
0Ohm
+3P3V_DUAL_MODE
PR199
100KOhm
1%
NI
PR200
0Ohm
+3P3V_DUAL_RF
NI
PR201
0Ohm
PR202
162KOhm
1%
+3P3V_DUAL_TRIP
+3P3V_DUAL_BST
PR195
1Ohm
tx_r0603_h24
+3P3V_DUAL_BST1
PC260
0.1UF/25V
mx_c0603
X7R/+/-10%
+3P3V_DUAL_LL
PU37B
GND1
GND2
GND3
GND4
GND5
GND6
GND7
GND8
GND9
TPS53319DQPR
+3P3V_DUAL_FB3
PR194
2KOhm
1%
+3P3V_DUAL_FB3_F
PJP28
SHORTPIN
NOBOM
PC259
470PF/50V
X7R/+/-10%
+3P3V_DUAL_FB
PC256
0.1UF/16V
+3P3V_DUAL_FB_F
PJP29
SHORTPIN
NOBOM
PL20
2.2UH
+3.3V_DUAL
PR203
4.7Ohm
mx_r1206
+3P3V_DUAL_SN
PC261
1000PF/50V
X7R/+/-10%
PC264
0.1UF/16V
X7R/+/-10%
PC263
22UF/6.3V
X5R/+/-10%
mx_c0603
PC262
22UF/6.3V
X5R/+/-10%
mx_c0603
PCE19
560UF/6.3V
ESR=8mOhm/Ir=4700mA
PJP30
SHORTPIN
NOBOM
+3P3V_DUAL_FB
PR204
44.2KOhm
1%
+3P3V_DUAL_FB2_R
PR205
0Ohm
+3P3V_DUAL_FB2
PR206
10KOhm
1%
Vout=0.6*(1+44.2/10)=3.3V

$$I_{OCP} = \frac{R_{TRIP}}{12.3} + \frac{1}{2 \times L \times f_{SW}} \times \frac{(V_{IN} - V_{OUT}) \times V_{OUT}}{V_{IN}}$$

Table 2. Resistor and Switching Frequency

RESISTOR (R_{RF}) CONNECTIONS		SWITCHING FREQUENCY (f_{SW}) (kHz)
VALUE (kΩ)	CONNECT TO	
0	GND	250
187	GND	300
619	GND	400
OPEN	n/a	500
866	VREG	600
309	VREG	750
124	VREG	850
0	VREG	970

Table 1. Soft-Start and MODE Settings

MODE SELECTION	ACTION	SOFT-START TIME (ms)	R_{MODE} (kΩ)
Auto Skip	Pull down to GND	0.7	39
		1.4	100
		2.8	200
		5.6	475
Forced CCM(1)	Connect to PGOOD	0.7	39
		1.4	100
		2.8	200
		5.6	475

<Variant Name>

PEGATRON	Title : 103 3P3V_DAUL		
<OrgName>	Engineer: Gary Chang		
Size A3	Project Name <Doc>		Rev 1.02
Date: Tuesday, November 27, 2018		Sheet 103 of 110	

+2P5V_DUAL

Power Rail : +2P5V_DUAL
MAX = 0.1A
OCP = 3.5A
Max step = --
DI/DT = --
Pd = 0.08W
ThetaJA = 75°C/W
Tj = 0.08*75+40 = 46 °C < 125 °C

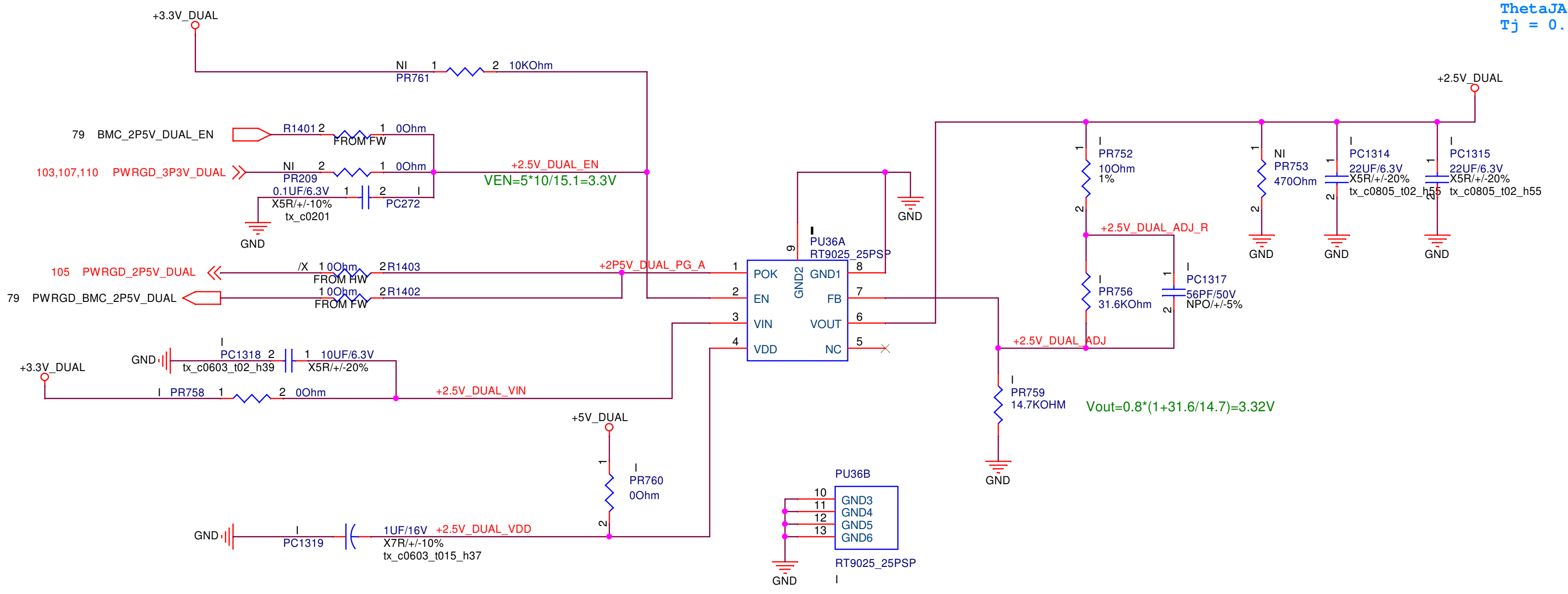
+3.3V_DUAL
NI 1 2 10KOhm
PR761
79 BMC_2P5V_DUAL_EN
R1401 2 1 0Ohm
FROM FW
103,107,110 PWRGD_3P3V_DUAL
NI 2 1 0Ohm
PR209
0.1UF/6.3V 1 2 I
X5R/+/-10% PC272
tx_c0201
GND
+2.5V_DUAL_EN
VEN=5*10/15.1=3.3V
105 PWRGD_2P5V_DUAL
/X 1 0Ohm 2 R1403
FROM HW
79 PWRGD_BMC_2P5V_DUAL
1 0Ohm 2 R1402
FROM FW
+2P5V_DUAL_PG_A
GND
I
PU36A
RT9025_25PSP
9
GND2
1 POK
2 EN
3 VIN
4 VDD
GND1 8
FB 7
VOUT 6
NC 5
I
PC1318 2 1 10UF/6.3V
tx_c0603_t02_h39 X5R/+/-20%
+3.3V_DUAL
I PR758 1 2 0Ohm
+2.5V_DUAL_VIN
+5V_DUAL
1
I
PR760
0Ohm
2
GND
I
PC1319
1UF/16V +2.5V_DUAL_VDD
X7R/+/-10%
tx_c0603_t015_h37
PU36B
10 GND3
11 GND4
12 GND5
13 GND6
RT9025_25PSP
I
GND
+2.5V_DUAL
1 I
PR752
10Ohm
1%
2
+2.5V_DUAL_ADJ_R
I
PR756
31.6KOhm
1 I
PC1317
56PF/50V
2 NPO/+/-5%
+2.5V_DUAL_ADJ
I
PR759
14.7KOHM
GND
Vout=0.8*(1+31.6/14.7)=3.32V
1 NI
PR753
470Ohm
2
GND
I
PC1314
1 22UF/6.3V
X5R/+/-20%
2 tx_c0805_t02_h55
GND
I
PC1315
1 22UF/6.3V
X5R/+/-20%
2 tx_c0805_t02_h55
GND

<Variant Name>

PEGATRON **Title** 104 2P5V_DUAL
<OrgName> **Engineer:** *Gary Chang*

Size	Project Name	Rev
A3	<Doc>	1.02

Date: Tuesday, November 27, 2018 Sheet 104 of 110

+1P2V_DUAL

Imax=1.1A
Itdc=0.77A
Irms=0.83A
Fsw=1MHz
OCP=4.5A
Vripple=50mV

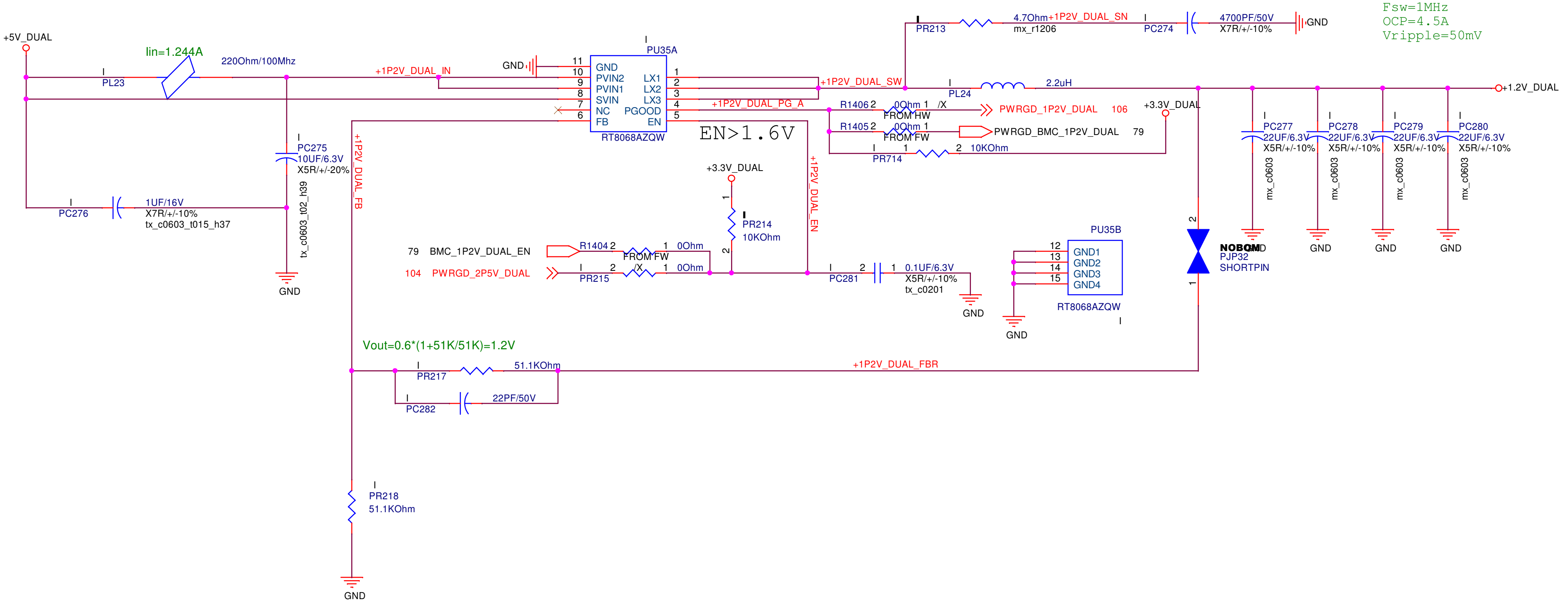
+5V_DUAL
Iin=1.244A
PL23
220Ohm/100Mhz
+1P2V_DUAL_IN
GND
PU35A
11 GND
10 PVIN2
9 PVIN1
8 SVIN
7 NC
6 FB
1 LX1
2 LX2
3 LX3
4 PGOOD
5 EN
RT8068AZQW
+1P2V_DUAL_SW
+1P2V_DUAL_PG_A
EN>1.6V
PR213
4.7Ohm
mx_r1206
+1P2V_DUAL_SN
PC274
4700PF/50V
X7R/+/-10%
GND
PL24
2.2uH
+1.2V_DUAL
R1406
0Ohm
FROM HW
/X
PWRGD_1P2V_DUAL 106
R1405
0Ohm
FROM FW
PWRGD_BMC_1P2V_DUAL 79
+3.3V_DUAL
PR714
10KOhm
PC275
10UF/6.3V
X5R/+/-20%
tx_c0603_t02_h39
PC276
1UF/16V
X7R/+/-10%
tx_c0603_t015_h37
GND
+1P2V_DUAL_FB
+1P2V_DUAL_EN
+3.3V_DUAL
PR214
10KOhm
79 BMC_1P2V_DUAL_EN
R1404
0Ohm
FROM FW
/X
104 PWRGD_2P5V_DUAL
PR215
0Ohm
PC281
0.1UF/6.3V
X5R/+/-10%
tx_c0201
GND
PU35B
12 GND1
13 GND2
14 GND3
15 GND4
RT8068AZQW
GND
PC277
22UF/6.3V
X5R/+/-10%
mx_c0603
PC278
22UF/6.3V
X5R/+/-10%
mx_c0603
PC279
22UF/6.3V
X5R/+/-10%
mx_c0603
PC280
22UF/6.3V
X5R/+/-10%
mx_c0603
GND
GND
GND
GND
NOBOM
PJP32
SHORTPIN
Vout=0.6*(1+51K/51K)=1.2V
PR217
51.1KOhm
+1P2V_DUAL_FBR
PC282
22PF/50V
PR218
51.1KOhm
GND

<Variant Name>

PEGATRON Title : 105 1P2V_DUAL

<OrgName> Engineer: Gary Chang

Size	Project Name	Rev
A3	<Doc>	1.02

Date: Tuesday, November 27, 2018 Sheet 105 of 110

+1P15V_DUAL

Imax=1A
Itdc=0.7A
Irms=0.81A
Fsw=1MHz
OCP=4.5A
Vripple=50mV

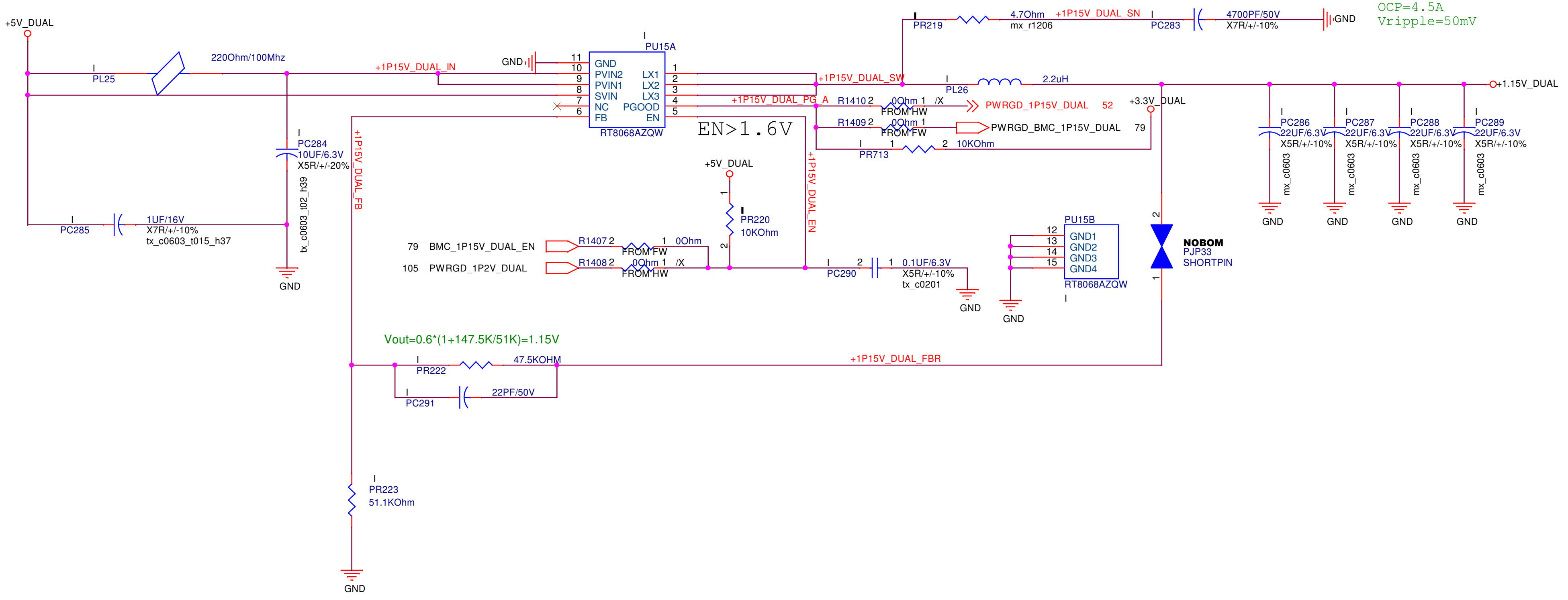
+5V_DUAL
PL25
220Ohm/100Mhz
+1P15V_DUAL_IN
GND
PU15A
11 GND
10 PVIN2
9 PVIN1
8 SVIN
7 NC
6 FB
LX1 1
LX2 2
LX3 3
PGOOD 4
EN 5
RT8068AZQW
PC284
10UF/6.3V
X5R/+/-20%
tx_c0603_t02_h39
PC285
1UF/16V
X7R/+/-10%
tx_c0603_t015_h37
GND
+1P15V_DUAL_FB
EN>1.6V
+5V_DUAL
PR220
10KOhm
+1P15V_DUAL_EN
79 BMC_1P15V_DUAL_EN
R1407
0Ohm
FROM FW
105 PWRGD_1P2V_DUAL
R1408
0Ohm /X
FROM HW
PC290
0.1UF/6.3V
X5R/+/-10%
tx_c0201
GND
PR219
4.7Ohm
mx_r1206
+1P15V_DUAL_SN
PC283
4700PF/50V
X7R/+/-10%
GND
+1P15V_DUAL_SW
PL26
2.2uH
+1.15V_DUAL
+1P15V_DUAL_PG_A
R1410
0Ohm /X
FROM HW
PWRGD_1P15V_DUAL 52
R1409
0Ohm
FROM FW
PWRGD_BMC_1P15V_DUAL 79
PR713
10KOhm
+3.3V_DUAL
PC286
PC287
PC288
PC289
22UF/6.3V
X5R/+/-10%
mx_c0603
GND
PU15B
12 GND1
13 GND2
14 GND3
15 GND4
RT8068AZQW
GND
NOBOM
PJP33
SHORTPIN
Vout=0.6*(1+147.5K/51K)=1.15V
PR222
47.5KOHM
+1P15V_DUAL_FBR
PC291
22PF/50V
PR223
51.1KOhm
GND

<Variant Name>

PEGATRON Title : 106 1P15V_DUAL
<OrgName> Engineer: Gary Chang

Size	Project Name	Rev
A3	<Doc>	1.02

Date: Tuesday, November 27, 2018 Sheet 106 of 110

P1V8/3V3_PGPPA

Imax=0..22A
TDC=0.15A
Pd=(5-1.8)*0.22=0.704W
Current limit=3A

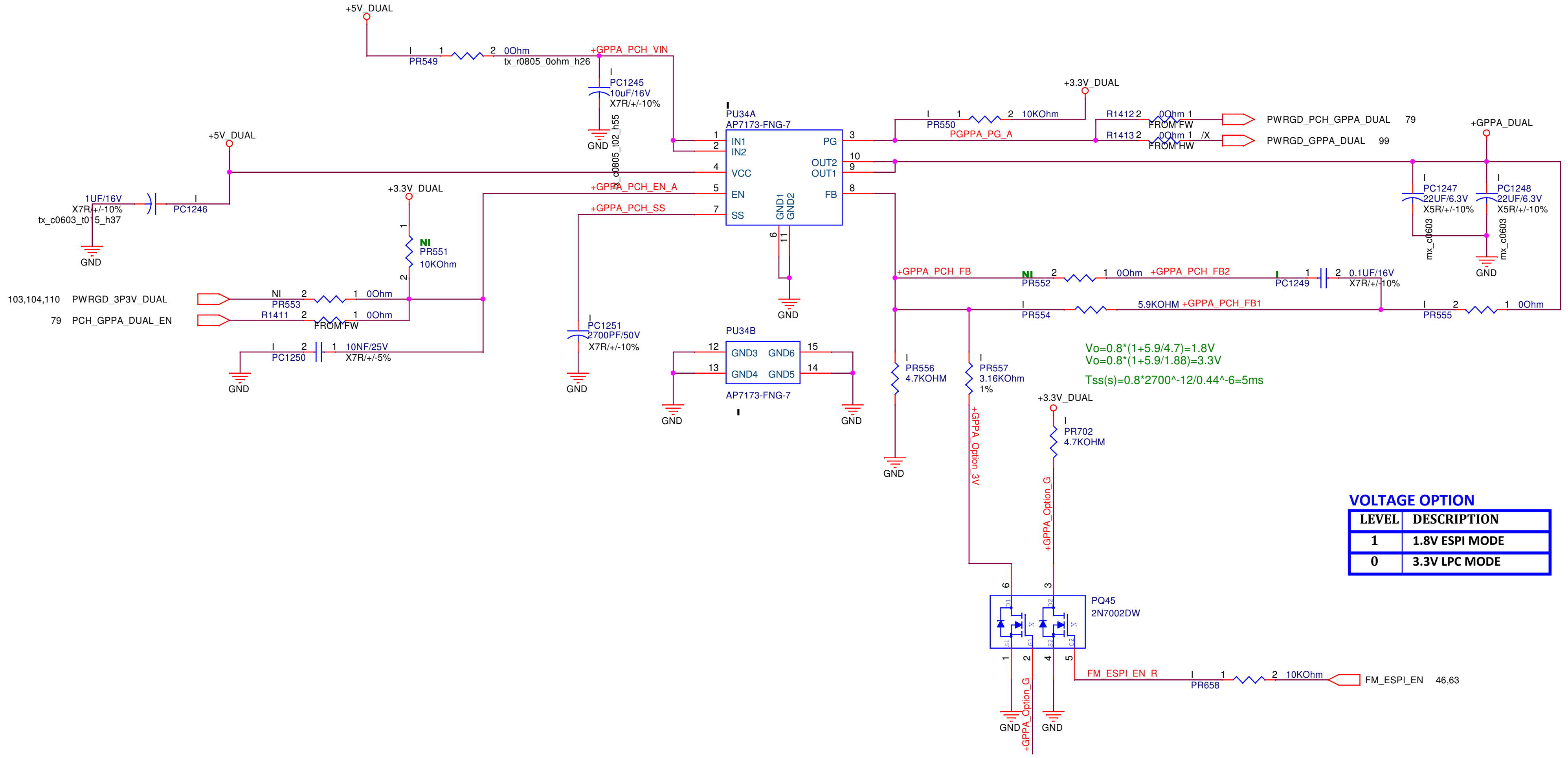
+5V_DUAL
PR549
0Ohm
tx_r0805_0ohm_h26
+GPPA_PCH_VIN
PC1245
10uF/16V
X7R/+/-10%
tx_c0805_t02_h55
GND
PU34A
AP7173-FNG-7
IN1
IN2
VCC
EN
SS
PG
OUT2
OUT1
FB
GND1
GND2
+GPPA_PCH_EN_A
+GPPA_PCH_SS
+3.3V_DUAL
PR550
10KOhm
PGPPA_PG_A
R1412
0Ohm
FROM FW
PWRGD_PCH_GPPA_DUAL 79
R1413
/X
FROM HW
PWRGD_GPPA_DUAL 99
+GPPA_DUAL
PC1247
22UF/6.3V
X5R/+/-10%
mx_c0603
PC1248
22UF/6.3V
X5R/+/-10%
mx_c0603
1UF/16V
X7R/+/-10%
tx_c0603_t015_h37
PC1246
NI
PR551
10KOhm
103,104,110 PWRGD_3P3V_DUAL
PR553
79 PCH_GPPA_DUAL_EN
R1411
PC1250
10NF/25V
X7R/+/-5%
PC1251
2700PF/50V
X7R/+/-10%
PU34B
GND3
GND6
GND4
GND5
AP7173-FNG-7
+GPPA_PCH_FB
PR552
+GPPA_PCH_FB2
PC1249
0.1UF/16V
X7R/+/-10%
PR554
5.9KOHM
+GPPA_PCH_FB1
PR555
PR556
4.7KOHM
PR557
3.16KOhm
1%
Vo=0.8*(1+5.9/4.7)=1.8V
Vo=0.8*(1+5.9/1.88)=3.3V
Tss(s)=0.8*2700^-12/0.44^-6=5ms
+GPPA_Option_3V
PR702
4.7KOHM
+GPPA_Option_G
PQ45
2N7002DW
FM_ESPI_EN_R
PR658
10KOhm
FM_ESPI_EN 46,63

VOLTAGE OPTION

LEVEL	DESCRIPTION
1	1.8V ESPI MODE
0	3.3V LPC MODE

<Variant Name>

PEGATRON Title : P107 P1V8/3V3_PGPPA
<OrgName> Engineer: Gary Chang

Size	Project Name	Rev
A3	<Doc>	1.02

Date: Tuesday, November 27, 2018 Sheet 107 of 110

+12V_5V_DUAL

Imax=7A
Itdc=4.9A
Vdroop=6.5m*7A=45mV
Pd=0.3^2*0.6m=0.3W

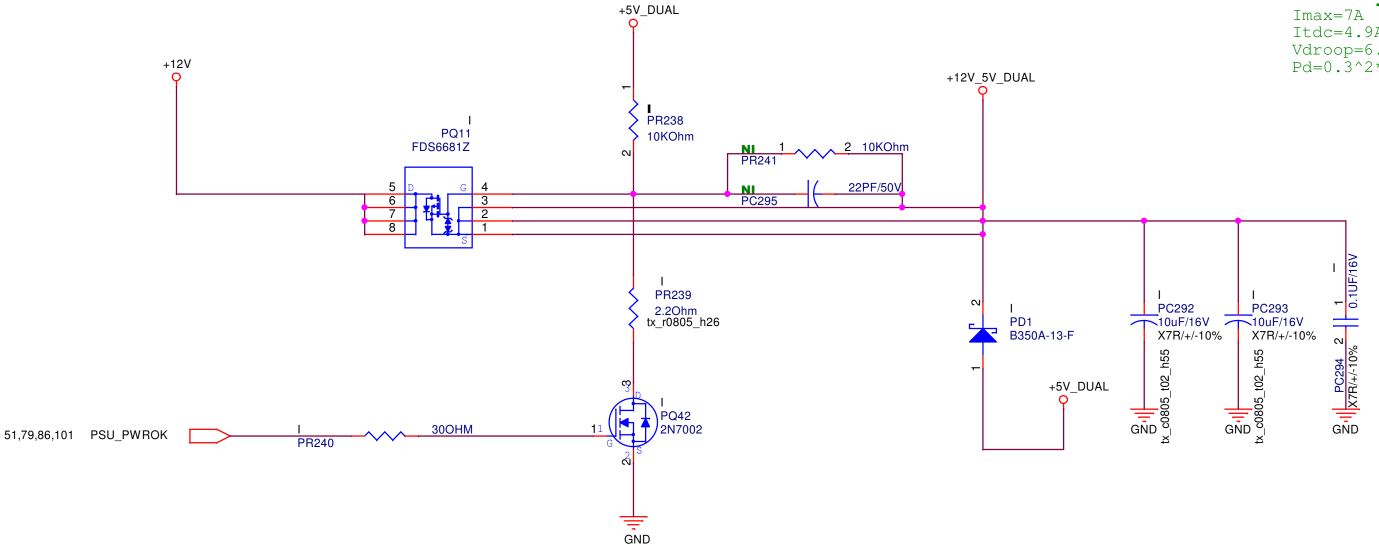
+5V_DUAL
+12V
+12V_5V_DUAL
PQ11
FDS6681Z
5
6
7
8
D
G
S
4
3
2
1
PR238
10KOhm
NI
PR241
1
2
10KOhm
NI
PC295
22PF/50V
PR239
2.2Ohm
tx_r0805_h26
PD1
B350A-13-F
+5V_DUAL
PC292
10uF/16V
X7R/+/-10%
tx_c0805_t02_h55
PC293
10uF/16V
X7R/+/-10%
tx_c0805_t02_h55
PC294
0.1UF/16V
X7R/+/-10%
GND
GND
GND
51,79,86,101
PSU_PWROK
PR240
30OHM
PQ42
2N7002
G
D
S
GND

<Variant Name>

PEGATRON **Title :** 108 P12V_P5V_DUAL

<OrgName> **Engineer:** *Gary Chang*

Size: A3
Project Name: <Doc>
Rev: 1.02
Date: Tuesday, November 27, 2018
Sheet 108 of 110

+1V_LAN

Imax=7.9A
Itdc=5.53A
Irms=1.8A
Fsw=500kHz
OCP=10.2A
Vripple=20mV

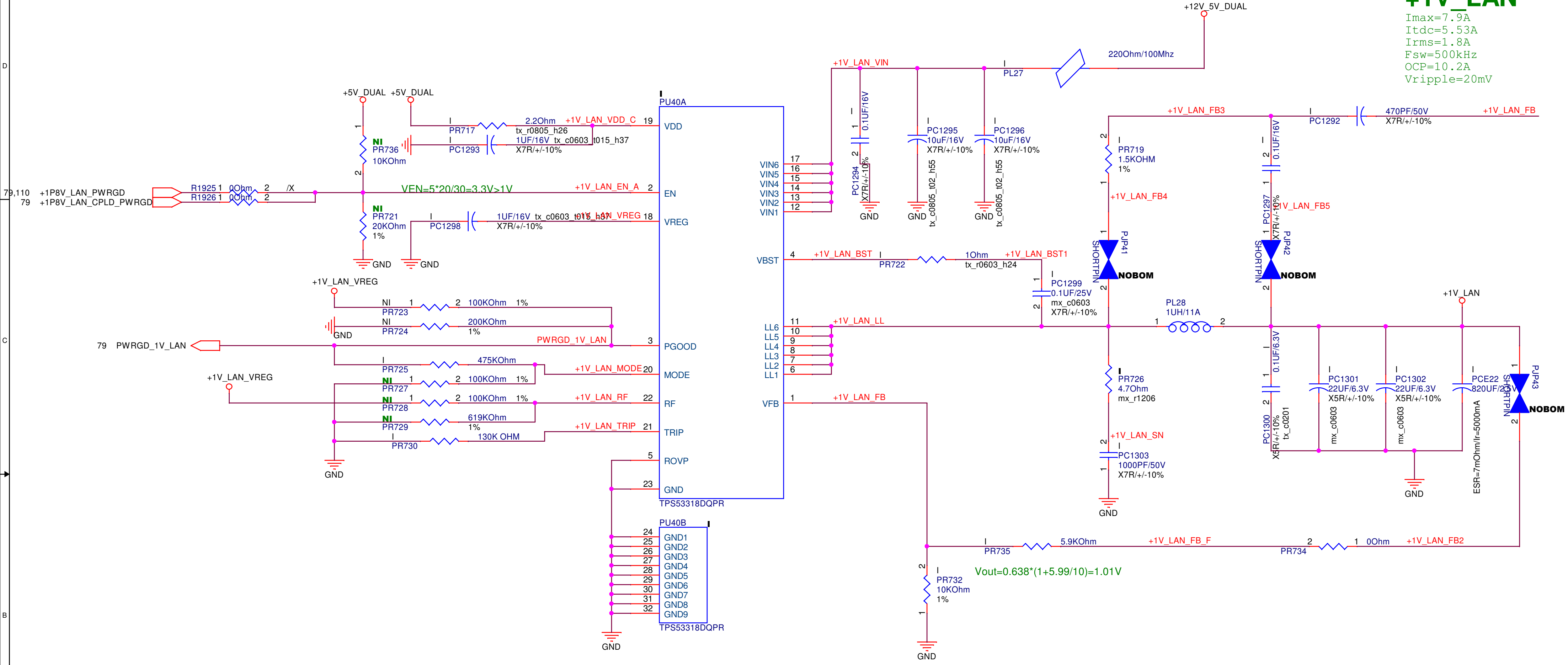
+12V_5V_DUAL
220Ohm/100Mhz
PL27
+1V_LAN_VIN
PC1294 0.1UF/16V X7R/+/-10%
PC1295 10uF/16V X7R/+/-10% tx_c0805_t02_h55
PC1296 10uF/16V X7R/+/-10% tx_c0805_t02_h55
GND
+5V_DUAL
PR717 2.2Ohm tx_r0805_h26
+1V_LAN_VDD_C
PC1293 1UF/16V tx_c0603_t015_h37 X7R/+/-10%
NI PR736 10KOhm
79,110 +1P8V_LAN_PWRGD
79 +1P8V_LAN_CPLD_PWRGD
R1925 0Ohm
R1926 0Ohm
/X
VEN=5*20/30=3.3V>1V
+1V_LAN_EN_A
NI PR721 20KOhm 1%
PC1298 1UF/16V tx_c0603_t015_h37 X7R/+/-10%
+1V_LAN_VREG
PU40A
VDD
EN
VREG
PGOOD
MODE
RF
TRIP
ROVP
GND
TPS53318DQPR
VIN6 VIN5 VIN4 VIN3 VIN2 VIN1
VBST
LL6 LL5 LL4 LL3 LL2 LL1
VFB
+1V_LAN_BST
PR722 1Ohm tx_r0603_h24
+1V_LAN_BST1
PC1299 0.1UF/25V mx_c0603 X7R/+/-10%
+1V_LAN_LL
+1V_LAN_VREG
NI PR723 100KOhm 1%
NI PR724 200KOhm 1%
79 PWRGD_1V_LAN
PWRGD_1V_LAN
PR725 475KOhm
+1V_LAN_MODE
NI PR727 100KOhm 1%
NI PR728 100KOhm 1%
+1V_LAN_RF
NI PR729 619KOhm 1%
PR730 130K OHM
+1V_LAN_TRIP
PU40B
GND1 GND2 GND3 GND4 GND5 GND6 GND7 GND8 GND9
TPS53318DQPR
+1V_LAN_FB3
PC1292 470PF/50V X7R/+/-10%
+1V_LAN_FB
PR719 1.5KOHM 1%
+1V_LAN_FB4
PC1297 0.1UF/16V X7R/+/-10%
+1V_LAN_FB5
PJP41 SHORTPIN NOBOM
PJP42 SHORTPIN NOBOM
PJP43 SHORTPIN NOBOM
PL28 1UH/11A
+1V_LAN
PR726 4.7Ohm mx_r1206
+1V_LAN_SN
PC1303 1000PF/50V X7R/+/-10%
PC1300 0.1UF/6.3V X5R/+/-10% tx_c0201
PC1301 22UF/6.3V X5R/+/-10% mx_c0603
PC1302 22UF/6.3V X5R/+/-10% mx_c0603
PCE22 820UF/2.5V ESR=7mOhm/Ir=5000mA
+1V_LAN_FB
PR735 5.9KOhm
+1V_LAN_FB_F
PR734 0Ohm
+1V_LAN_FB2
PR732 10KOhm 1%
Vout=0.638*(1+5.99/10)=1.01V

$$I_{OCP}=\frac{R_{TRIP}}{12.3}+\frac{1}{2\times L\times f_{SW}}\times\frac{(V_{IN}-V_{OUT})\times V_{OUT}}{V_{IN}}$$

Table 1. Soft-Start and MODE Settings

MODE SELECTION	ACTION	SOFT-START TIME (ms)	R_{MODE} (kΩ)
Auto Skip	Pull down to GND	0.7	39
		1.4	100
		2.8	200
		5.6	475
Forced CCM(1)	Connect to PGOOD	0.7	39
		1.4	100
		2.8	200
		5.6	475

Table 2. Resistor and Switching Frequency

RESISTOR (R_{RF}) CONNECTIONS		SWITCHING FREQUENCY (f_{SW}) (kHz)
VALUE (kΩ)	CONNECT TO	
0	GND	250
187	GND	300
619	GND	400
OPEN	n/a	500
866	VREG	600
309	VREG	750
124	VREG	850
0	VREG	970

<Variant Name>

PEGATRON
Title : 109 +1V_LAN
<OrgName>
Engineer: Gary Chang
Size A3
Project Name <Doc>
Rev 1.02
Date: Tuesday, November 27, 2018
Sheet 109 of 110

+1P8V_LAN

Imax=0.6A
TDC=0.42A
Pd=(5-1.8)*0.6=1.9W
Current limit=3A

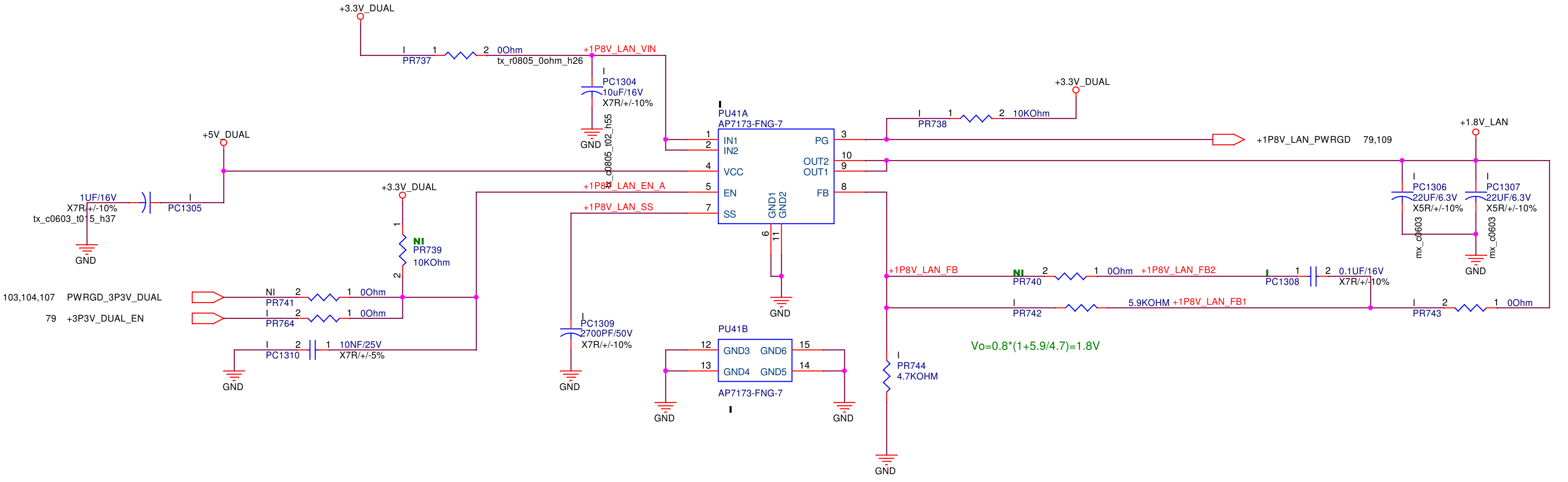
+3.3V_DUAL
PR737
0Ohm
tx_r0805_0ohm_h26
+1P8V_LAN_VIN
PC1304
10uF/16V
X7R/+/-10%
tx_c0805_t02_h55
GND
+5V_DUAL
1UF/16V
X7R/+/-10%
tx_c0603_t015_h37
PC1305
GND
+3.3V_DUAL
NI
PR739
10KOhm
103,104,107 PWRGD_3P3V_DUAL
79 +3P3V_DUAL_EN
NI
PR741
0Ohm
PR764
0Ohm
PC1310
10NF/25V
X7R/+/-5%
GND
+1P8V_LAN_EN_A
+1P8V_LAN_SS
PC1309
2700PF/50V
X7R/+/-10%
GND
PU41A
AP7173-FNG-7
IN1
IN2
VCC
EN
SS
GND1
GND2
PG
OUT2
OUT1
FB
GND
PU41B
GND3
GND4
GND6
GND5
AP7173-FNG-7
GND
GND
+3.3V_DUAL
PR738
10KOhm
+1P8V_LAN_PWRGD 79,109
+1.8V_LAN
PC1306
22UF/6.3V
X5R/+/-10%
mx_c0603
PC1307
22UF/6.3V
X5R/+/-10%
mx_c0603
GND
+1P8V_LAN_FB
NI
PR740
0Ohm
+1P8V_LAN_FB2
PC1308
0.1UF/16V
X7R/+/-10%
PR742
5.9KOHM
+1P8V_LAN_FB1
PR743
0Ohm
PR744
4.7KOHM
GND

Vo=0.8*(1+5.9/4.7)=1.8V

<Variant Name>

PEGATRON
<OrgName>

Title :	+1P8V_LAN
Engineer:	Gary Chang

Size	Project Name	Rev
A3	<Doc>	1.02

Date: Tuesday, November 27, 2018 Sheet 110 of 110