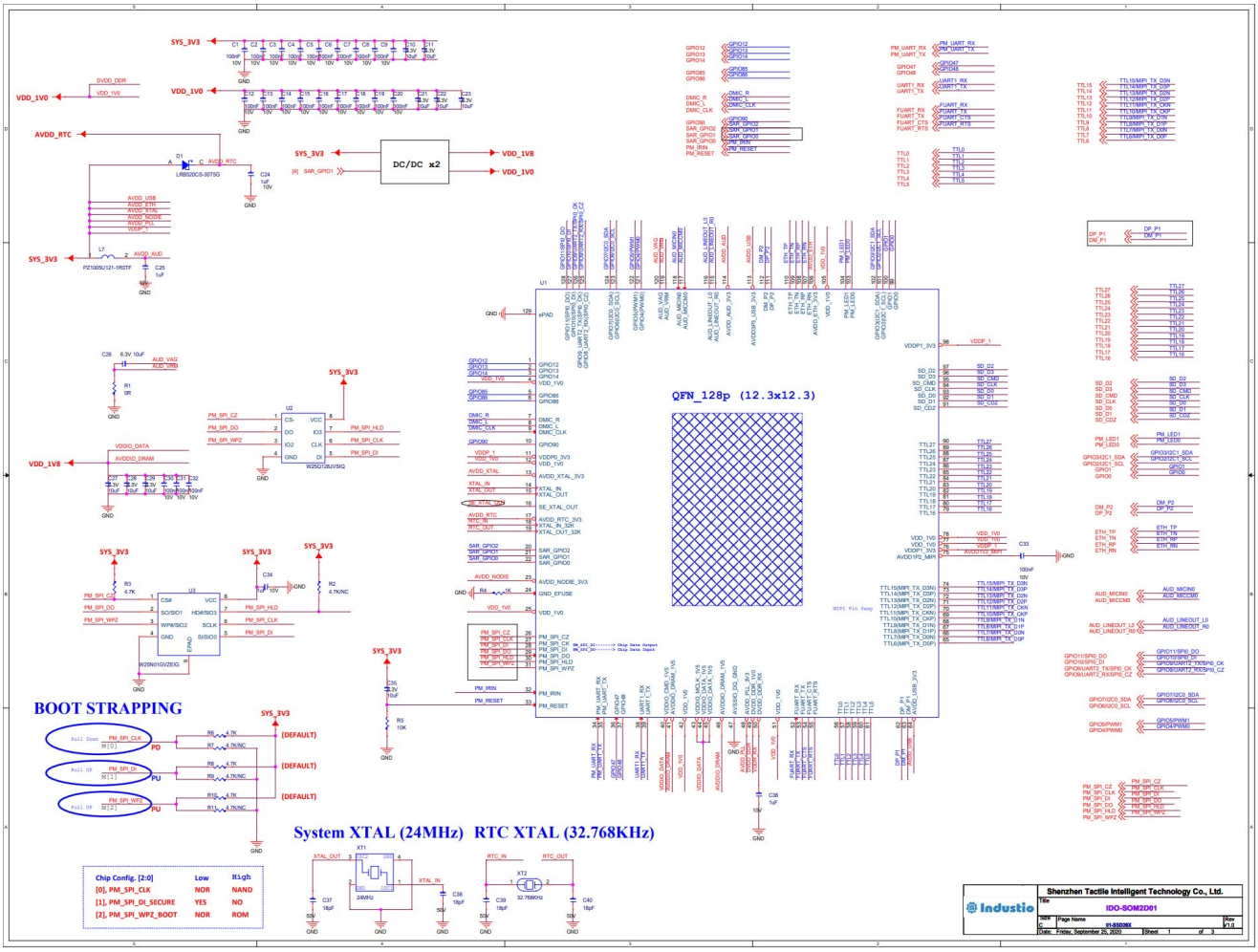
QFN_128p (12.3x12.3)
DC/DC x2
SYS_3V3
VDD_1V0
VDD_1V8
AVDD_RTC
BOOT STRAPPING
System XTAL (24MHz) RTC XTAL (32.768KHz)
Chip Config. [2:0] Low High
[0], PM_SPI_CLK NOR NAND
[1], PM_SPI_DI_SECURE YES NO
[2], PM_SPI_WPZ_BOOT NOR ROM
Industio
Shenzhen Tactile Intelligent Technology Co., Ltd.
IDO-SOM2D01
01-S0206X
Date: Friday, September 25, 2020
Sheet 1 of 3

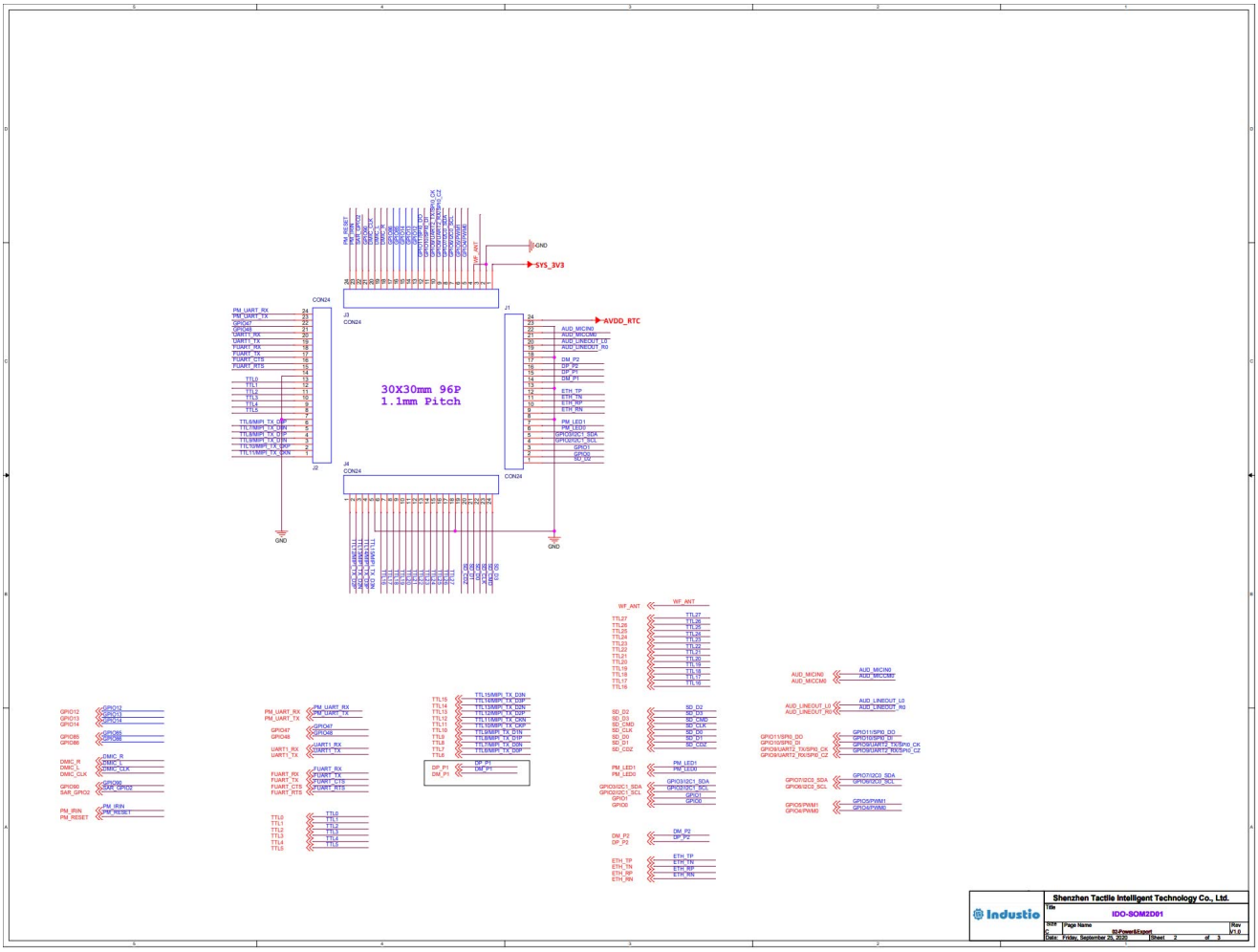
30X30mm 96P
1.1mm Pitch
CON24
J1
J2
J3
J4
SYS_3V3
AVDD_RTC
GND
Shenzhen Tactile Intelligent Technology Co., Ltd.
Industio
IDO-SOM2D01
Page Name
02-PowerExport
Rev
V1.0
Date: Friday, September 25, 2020
Sheet 2 of 3

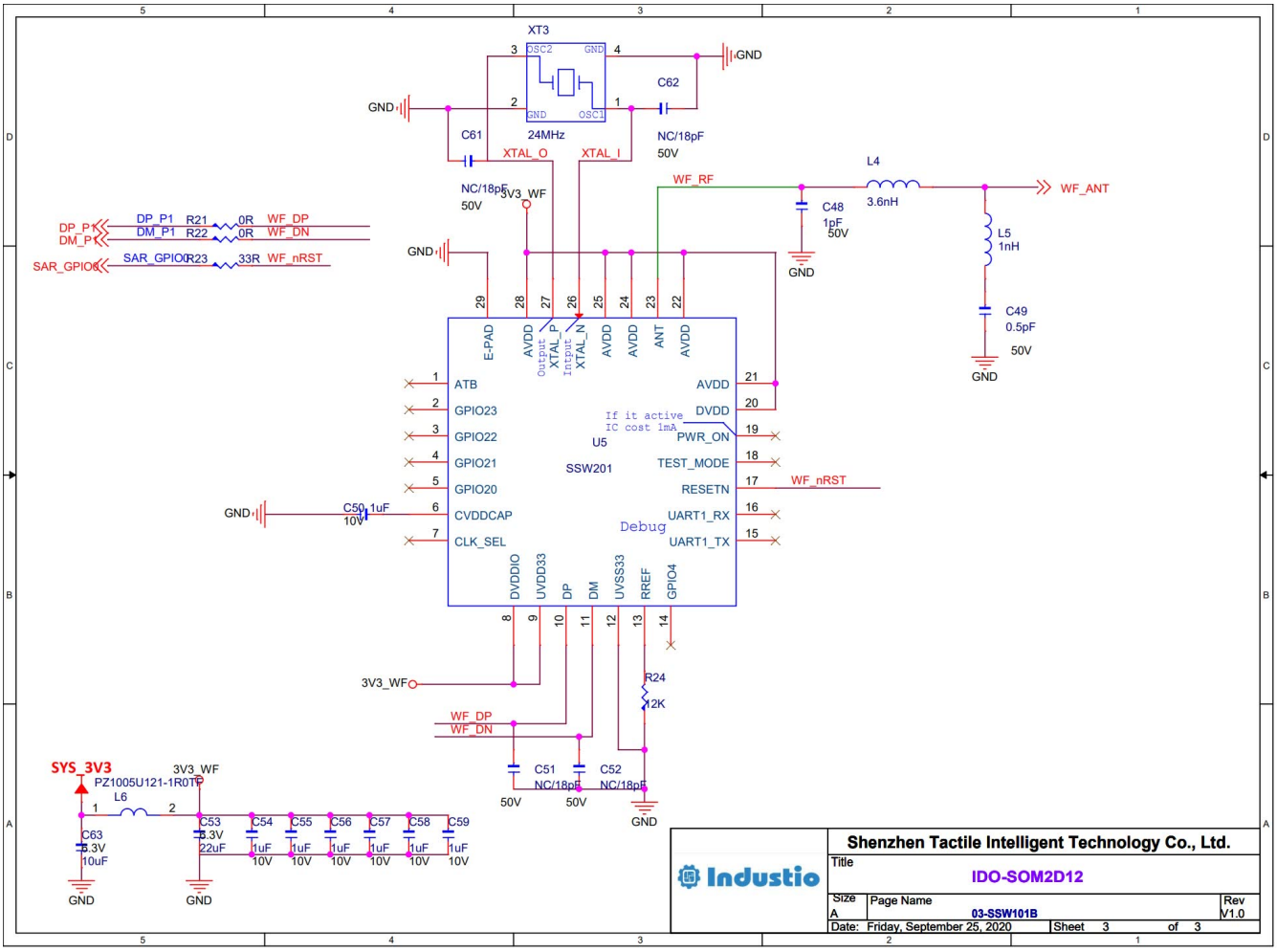
XT3
OSC2
GND
OSC1
24MHz
C62
NC/18pF
50V
C61
NC/18pF
50V
XTAL_O
XTAL_I
3V3_WF
WF_RF
L4
3.6nH
WF_ANT
C48
1pF
50V
L5
1nH
C49
0.5pF
50V
DP_P1
DM_P1
R21
R22
0R
WF_DP
WF_DN
SAR_GPIO6
R23
33R
WF_nRST
E-PAD
AVDD
XTAL_P
XTAL_N
ANT
ATB
GPIO23
GPIO22
GPIO21
GPIO20
CVDDCAP
CLK_SEL
U5
SSW201
If it active
IC cost 1mA
PWR_ON
TEST_MODE
RESETN
DVDD
UART1_RX
UART1_TX
Debug
C50 1uF
10V
DVDDIO
UVDD33
DP
DM
UVSS33
RREF
GPIO4
R24
12K
C51
NC/18pF
50V
C52
NC/18pF
50V
SYS_3V3
PZ1005U121-1R0TF
L6
C63
6.3V
10uF
C53
6.3V
22uF
C54
1uF
10V
C55
1uF
10V
C56
1uF
10V
C57
1uF
10V
C58
1uF
10V
C59
1uF
10V
Shenzhen Tactile Intelligent Technology Co., Ltd.
Industio
IDO-SOM2D12
Page Name
03-SSW101B
Rev
V1.0
Date: Friday, September 25, 2020
Sheet 3 of 3