STAT 453: Introduction to Deep Learning and Generative Models

Sebastian Raschka

http://stat.wisc.edu/~sraschka/teaching

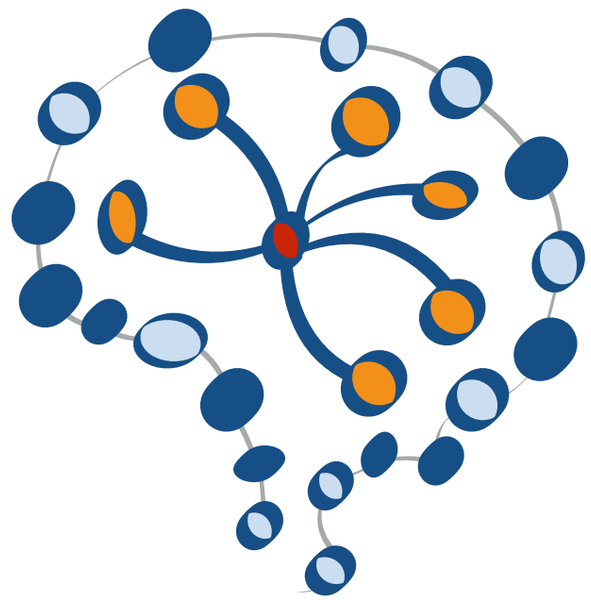

Lecture 16

Introduction to Autoencoders

Unsupervised Learning

Working with datasets *without* considering a/the *target* variable

Some Applications and Goals:

- Finding hidden structures in data
- Data compression
- Clustering
- Retrieving similar objects
- Exploratory data analysis
- Generating new examples

A Basic Fully-Connected (Multilayer-Perceptron) Autoencoder

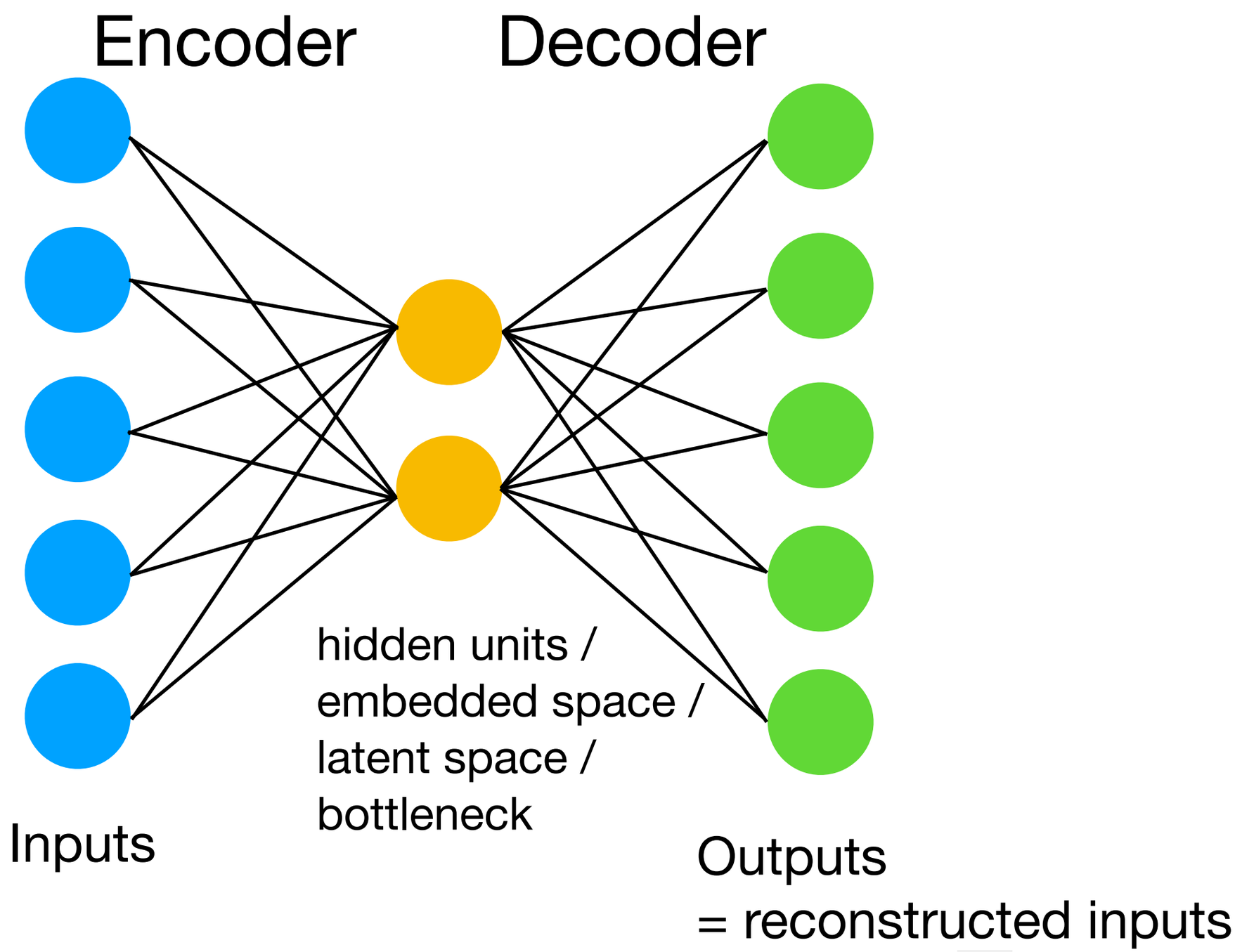

A Basic Fully-Connected (Multilayer-Perceptron) Autoencoder

$$\mathcal{L}(\mathbf{x}, \mathbf{x}') = ||\mathbf{x} - \mathbf{x}'||_2^2 = \sum_i (x_i - x_i')^2$$

If we don't use non-linear activation functions and minimize the MSE, this is very similar to PCA

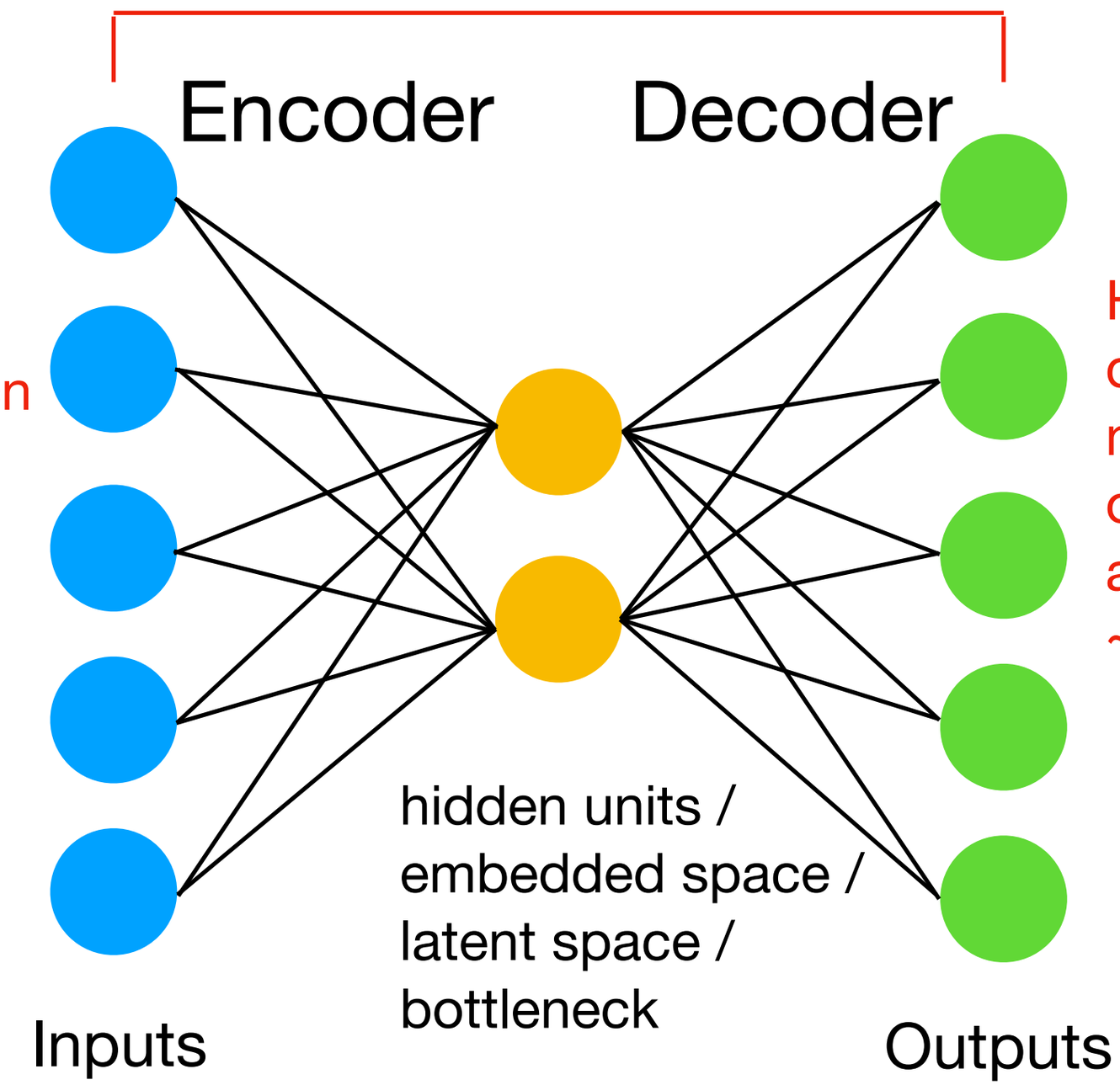

However, the latent dimensions will not necessarily be orthogonal and will have ~ same variance

A Basic Fully-Connected (Multilayer-Perceptron) Autoencoder

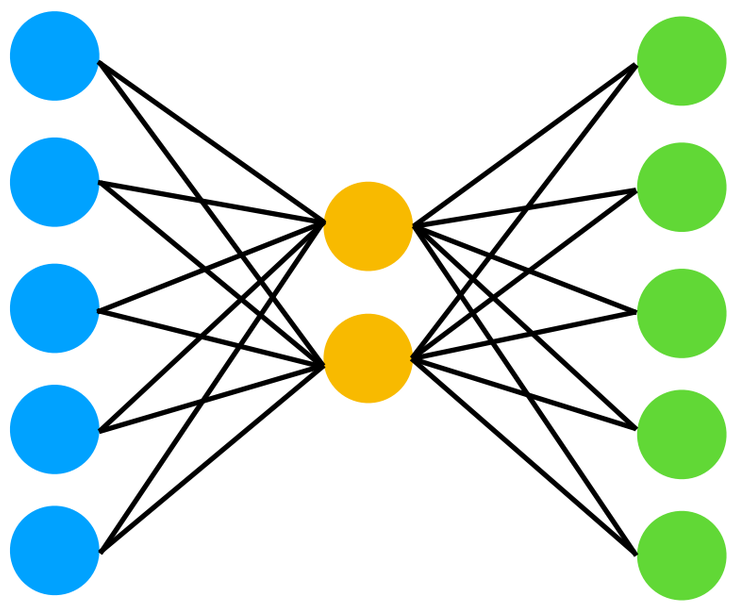

<u>Question:</u>

If we can achieve the same with PCA, which is essentially a kind of matrix factorization that is more efficient than Backprop + SGD, why bother with autoencoders?

Potential Autoencoder Applications

After training, disregard this part

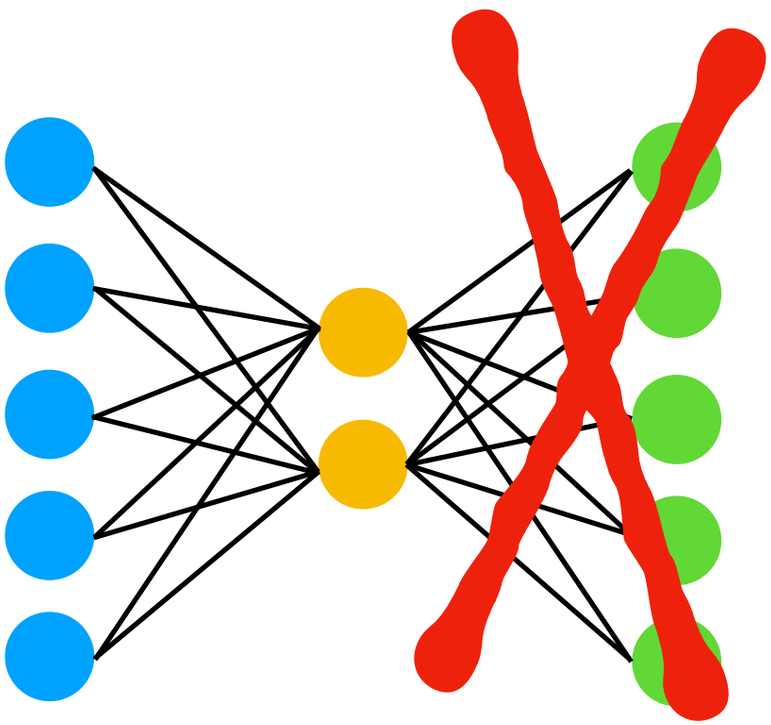

Use embedding as input to classic machine learning methods (SVM, KNN, Random Forest, ...)

Or, similar to transfer learning, train autoencoder on large image dataset, then fine tune encoder part on your own, smaller dataset and/or provide your own output (classification) layer

Latent space can also be used for visualization (EDA, clustering), but there are better methods for that

A Simple Autoencoder

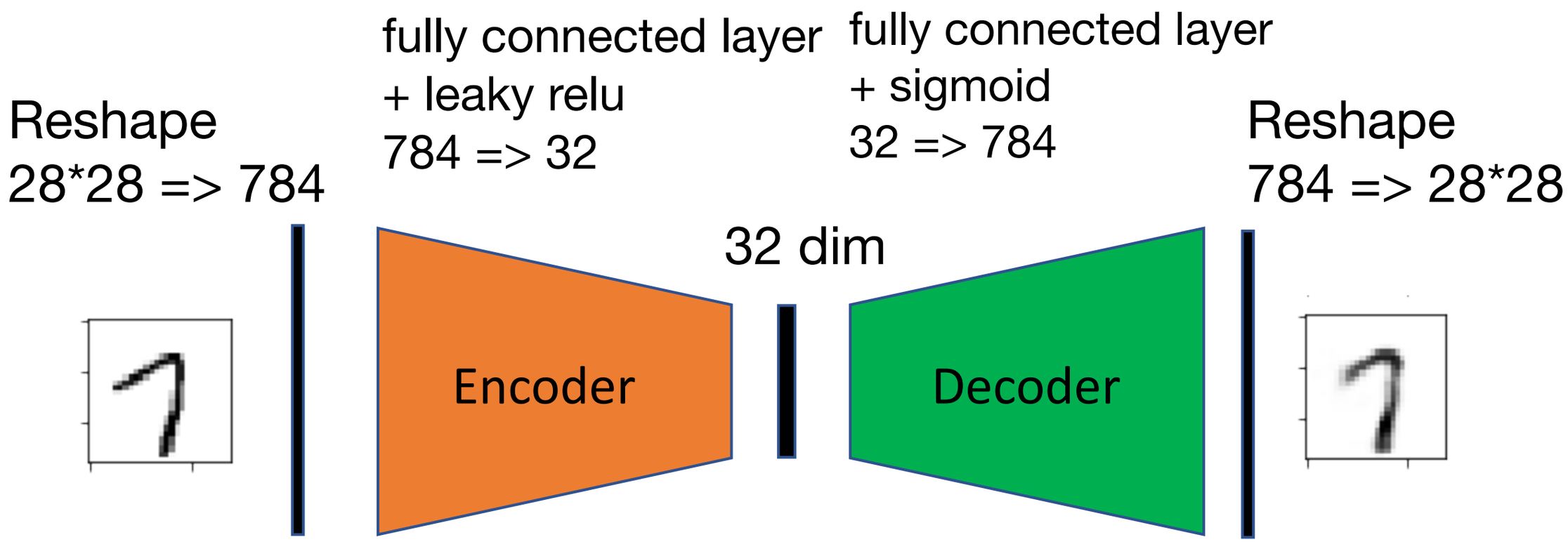

https://github.com/rasbt/deeplearning-models/blob/master/pytorch_ipynb/autoencoder/ae-basic.ipynb

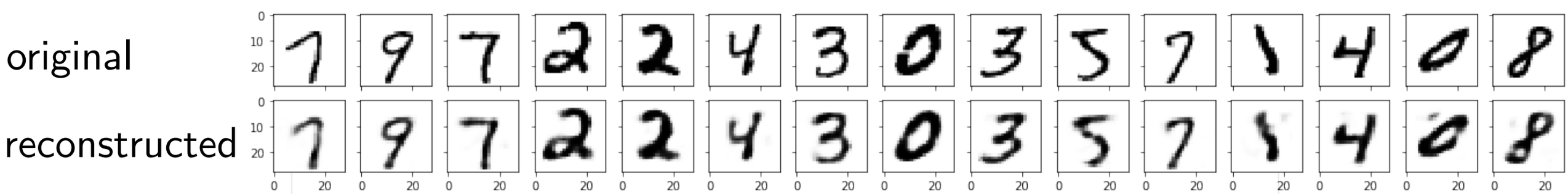

Autoencoders and Dropout

Add dropout layers to force networks to learn redundant features

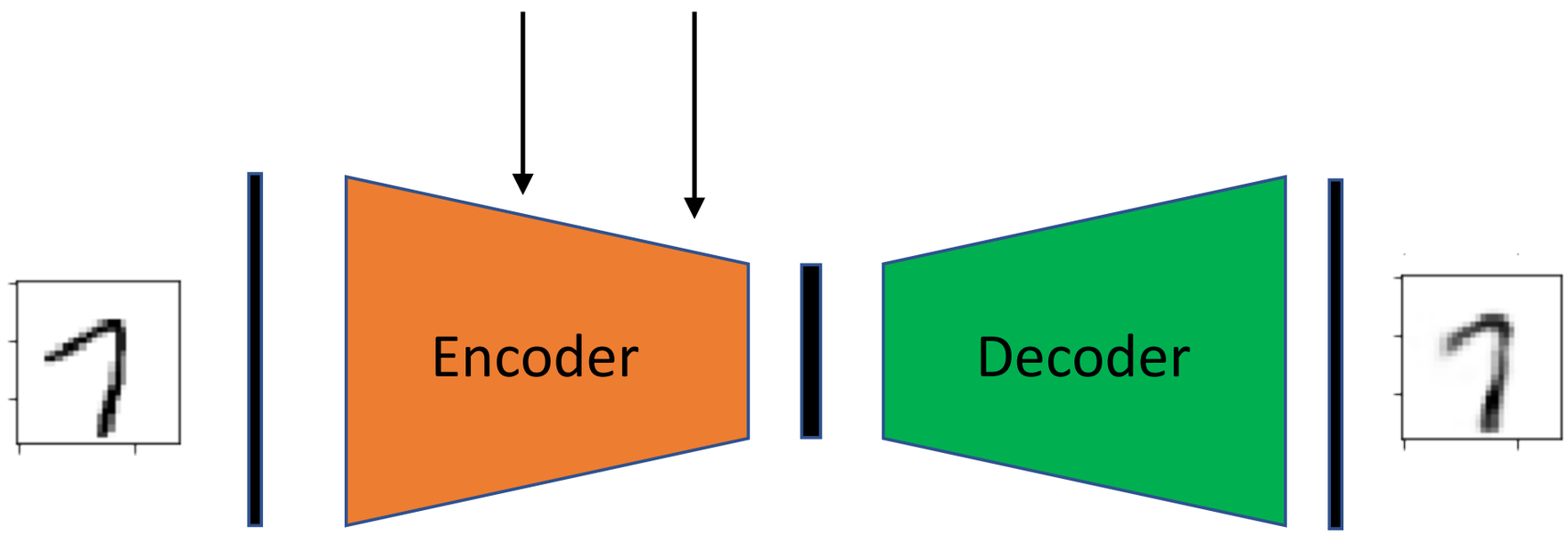

Denoising Autoencoder

Add dropout after the input, or add noise to the input to learn to denoise images

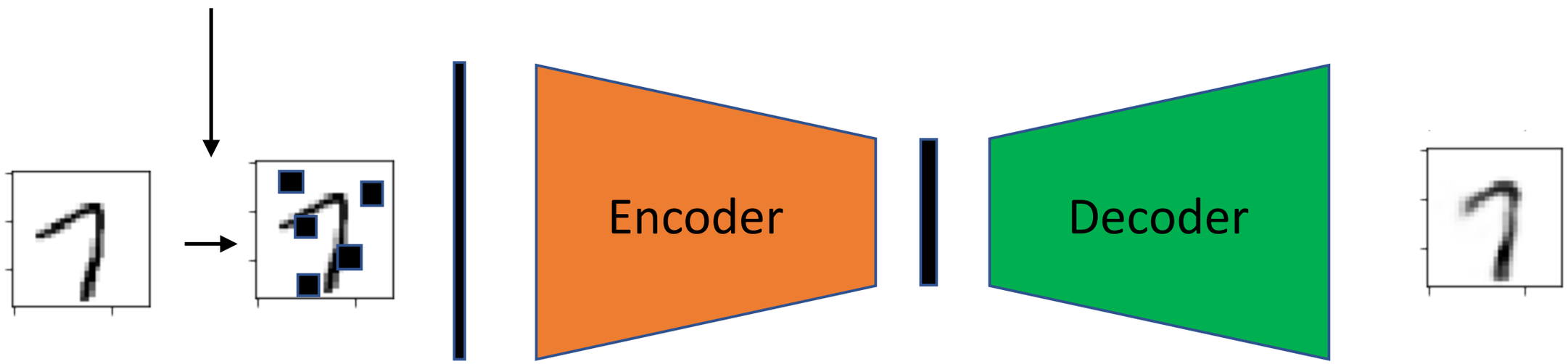

Vincent, P., Larochelle, H., Bengio, Y., & Manzagol, P. A. (2008, July). Extracting and composing robust features with denoising autoencoders. In *Proceedings of the 25th International Conference on Machine Learning* (pp. 1096-1103). ACM.

Variational Autoencoder

$$L^{[i]} = -\mathbb{E}_{z \sim q_w(z \mid x^{[i]})} \left[\log p_w \left(x^{[i]} \mid z \right) \right] + \mathbf{KL} \left(q_w \left(z \mid x^{[i]} \right) \| p(z) \right)$$

Expected neg. log likelihood term; wrt to encoder distribution

Kullback-Leibler divergence term where $p(z) = \mathcal{N}\left(\mu = 0, \sigma^2 = 1\right)$

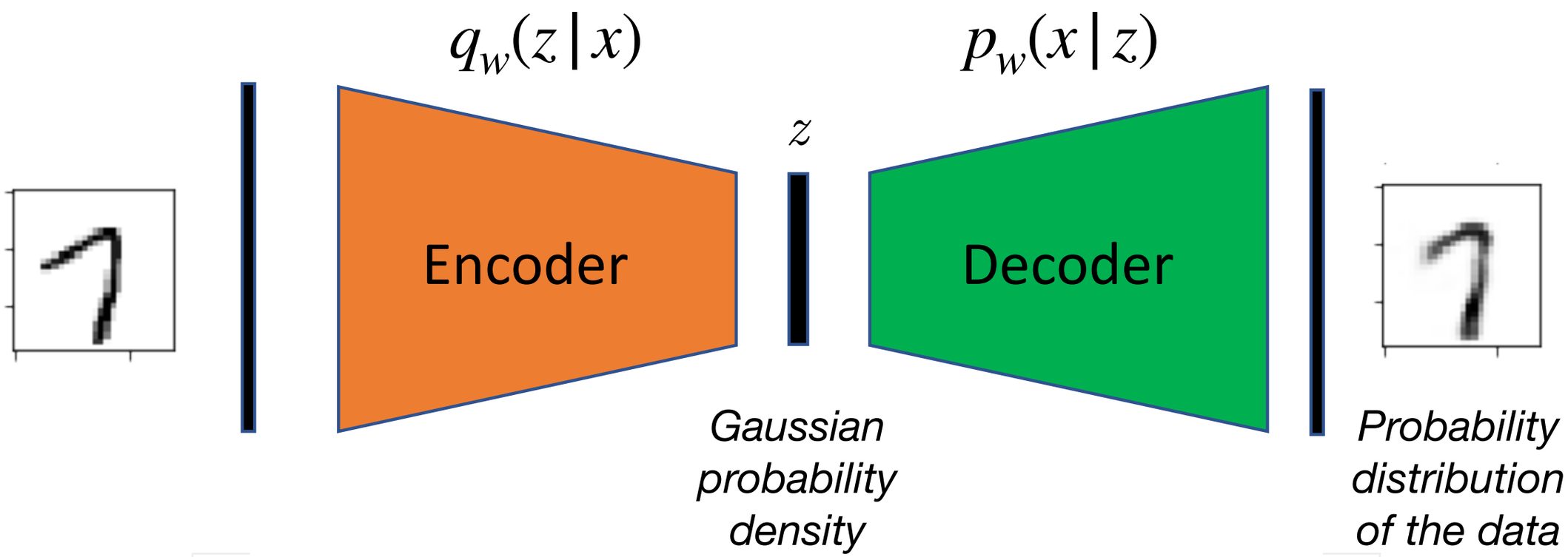

Kingma, D. P., & Welling, M. (2013). Auto-encoding Variational Bayes. *arXiv preprint arXiv:1312.6114*.