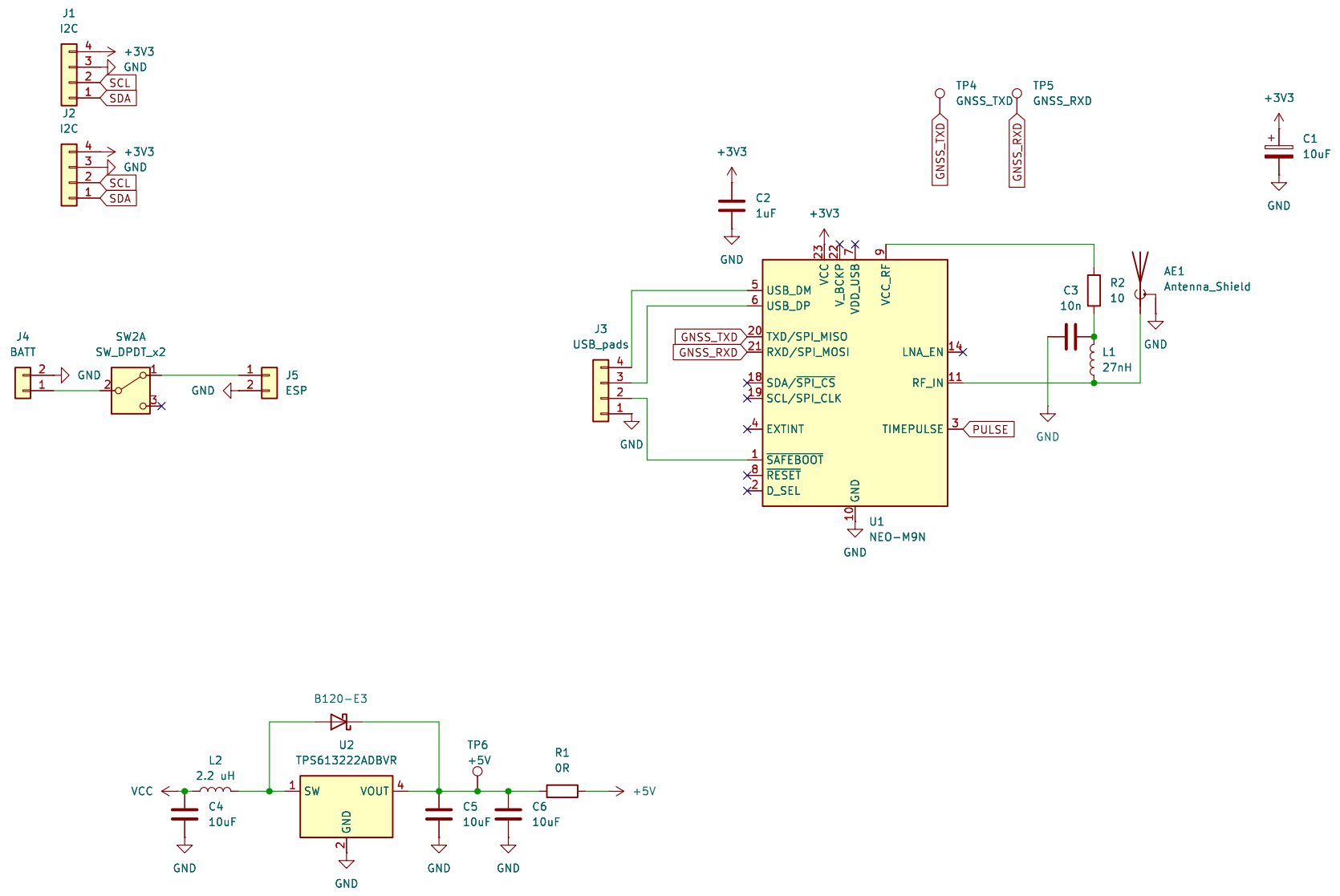
J1
I2C
+3V3
GND
SCL
SDA
J2
I2C
+3V3
GND
SCL
SDA
J4
BATT
SW2A
SW_DPDT_x2
GND
GND
J5
ESP
+3V3
C2
1uF
GND
+3V3
TP4
GNSS_TXD
TP5
GNSS_RXD
GNSS_TXD
GNSS_RXD
+3V3
C1
10uF
GND
J3
USB_pads
GND
USB_DM
USB_DP
GNSS_TXD
GNSS_RXD
TXD/SPI_MISO
RXD/SPI_MOSI
SDA/SPI_CS
SCL/SPI_CLK
EXTINT
SAFEBOOT
RESET
D_SEL
VCC
V_BCKP
VDD_USB
VCC_RF
LNA_EN
RF_IN
TIMEPULSE
PULSE
GND
U1
NEO-M9N
GND
C3
10n
R2
10
L1
27nH
GND
AE1
Antenna_Shield
GND
B120-E3
U2
TPS613222ADBVR
L2
2.2 uH
VCC
C4
10uF
GND
SW
VOUT
GND
GND
TP6
+5V
C5
10uF
GND
C6
10uF
GND
R1
0R
+5V

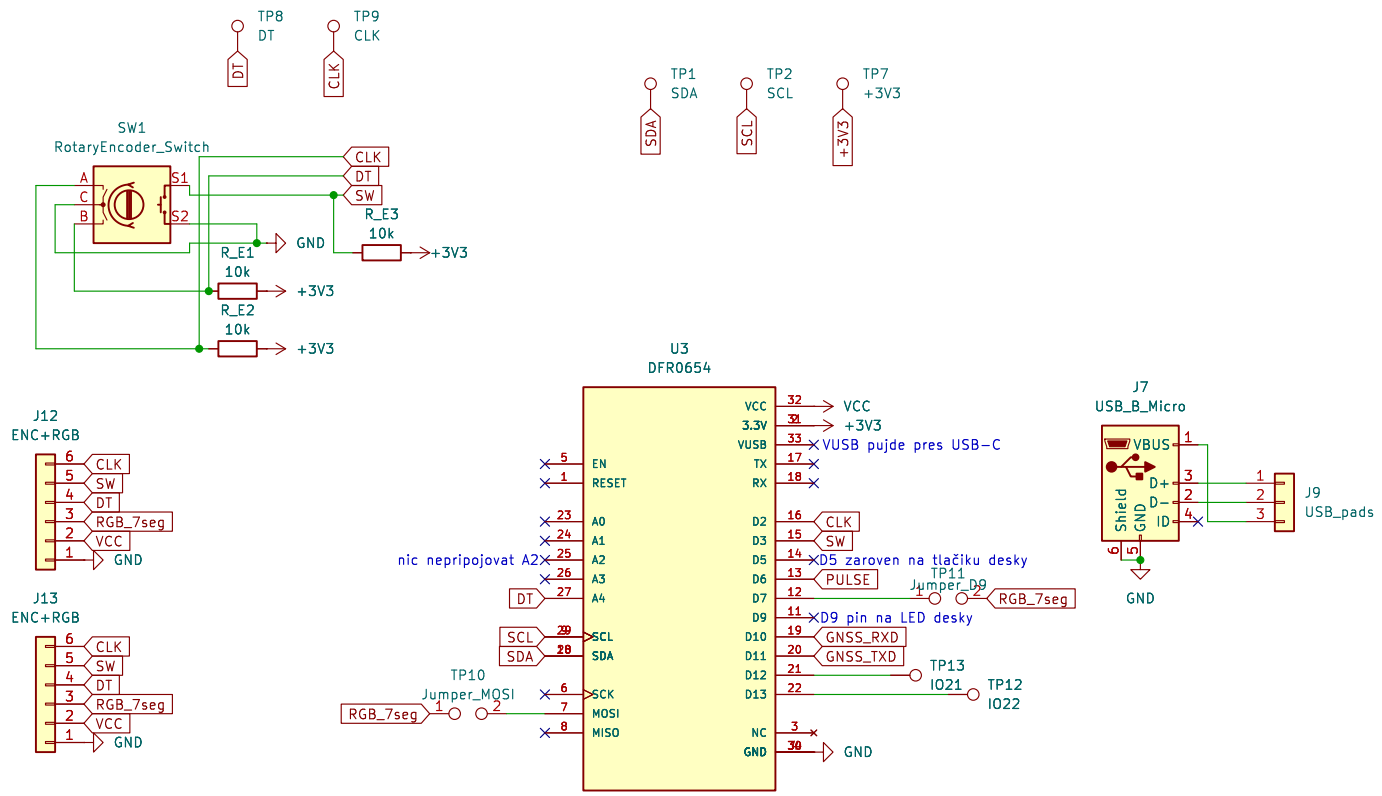
TP8
DT
TP9
CLK
TP1
SDA
TP2
SCL
TP7
+3V3
SW1
RotaryEncoder_Switch
A
C
B
S1
S2
CLK
DT
SW
R_E3
10k
+3V3
GND
R_E1
10k
+3V3
R_E2
10k
+3V3
J12
ENC+RGB
CLK
SW
DT
RGB_7seg
VCC
GND
J13
ENC+RGB
CLK
SW
DT
RGB_7seg
VCC
GND
U3
DFR0654
VCC
3.3V
VUSB
TX
RX
EN
RESET
A0
A1
A2
A3
A4
SCL
SDA
SCK
MOSI
MISO
D2
D3
D5
D6
D7
D9
D10
D11
D12
D13
NC
GND
VCC
+3V3
VUSB pujde pres USB-C
CLK
SW
D5 zaroven na tlačiku desky
PULSE
D9 pin na LED desky
GNSS_RXD
GNSS_TXD
TP13
IO21
TP12
IO22
GND
nic nepripojovat A2
DT
SCL
SDA
TP10
Jumper_MOSI
RGB_7seg
TP11
Jumper_D9
RGB_7seg
J7
USB_B_Micro
VBUS
D+
D-
ID
GND
Shield
J9
USB_pads
GND

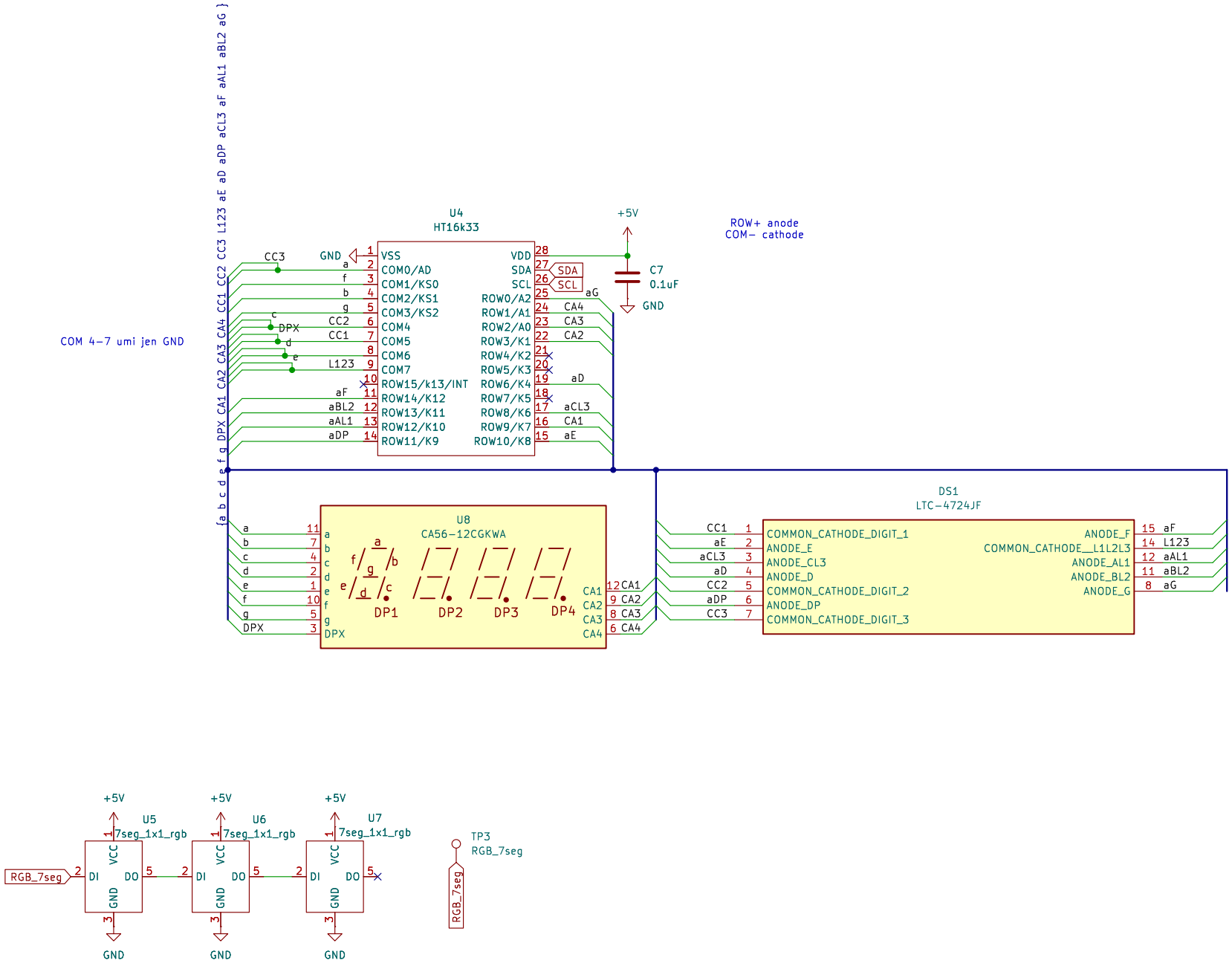
{a b c d e f g DPX CA1 CA2 CA3 CA4 CC1 CC2 CC3 L123 aE aD aDP aCL3 aF aAL1 aBL2 aG }
COM 4–7 umi jen GND
U4
HT16k33
+5V
ROW+ anode
COM– cathode
VSS
COM0/AD
COM1/KS0
COM2/KS1
COM3/KS2
COM4
COM5
COM6
COM7
ROW15/k13/INT
ROW14/K12
ROW13/K11
ROW12/K10
ROW11/K9
VDD
SDA
SCL
ROW0/A2
ROW1/A1
ROW2/A0
ROW3/K1
ROW4/K2
ROW5/K3
ROW6/K4
ROW7/K5
ROW8/K6
ROW9/K7
ROW10/K8
C7
0.1uF
GND
U8
CA56–12CGKWA
DP1
DP2
DP3
DP4
DS1
LTC–4724JF
COMMON_CATHODE_DIGIT_1
ANODE_E
ANODE_CL3
ANODE_D
COMMON_CATHODE_DIGIT_2
ANODE_DP
COMMON_CATHODE_DIGIT_3
ANODE_F
COMMON_CATHODE__L1L2L3
ANODE_AL1
ANODE_BL2
ANODE_G

+5V
U5
7seg_1x1_rgb
U6
7seg_1x1_rgb
U7
7seg_1x1_rgb
RGB_7seg
VCC
DI
DO
GND
TP3
RGB_7seg

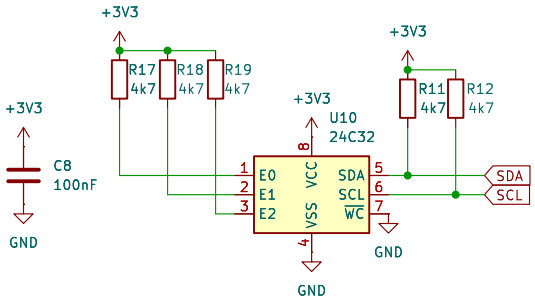
+3V3
R17
4k7
R18
4k7
R19
4k7
+3V3
U10
24C32
+3V3
R11
4k7
R12
4k7
+3V3
C8
100nF
GND
1
2
3
E0
E1
E2
VSS
4
8
VCC
SDA
SCL
WC
5
6
7
SDA
SCL
GND
GND