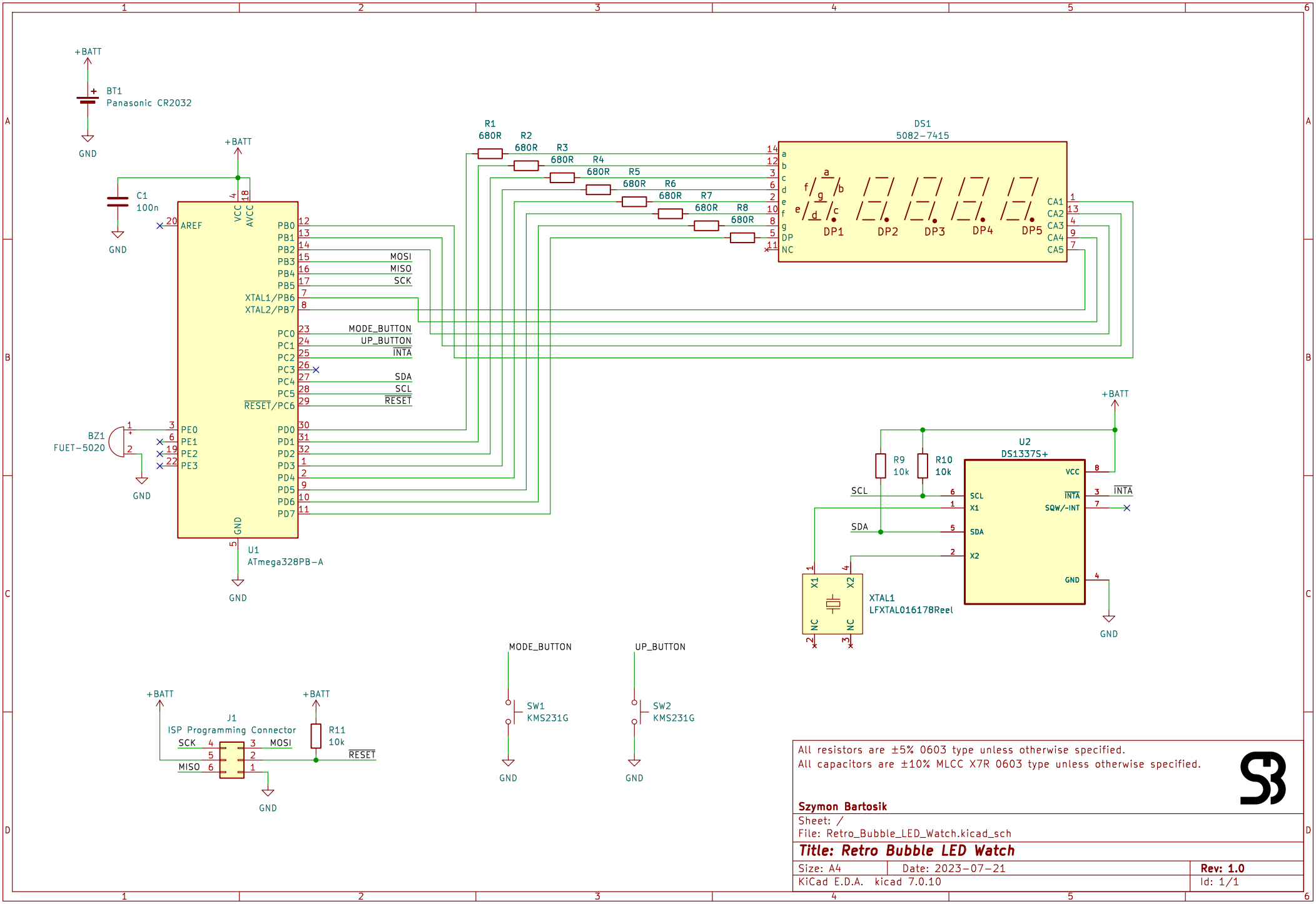

All resistors are ±5% 0603 type unless otherwise specified.
All capacitors are ±10% MLCC X7R 0603 type unless otherwise specified.

Szymon Bartosik

Sheet: /
File: Retro_Bubble_LED_Watch.kicad_sch

Title: Retro Bubble LED Watch

Size: A4	Date: 2023-07-21	**Rev: 1.0**
KiCad E.D.A. kicad 7.0.10		Id: 1/1