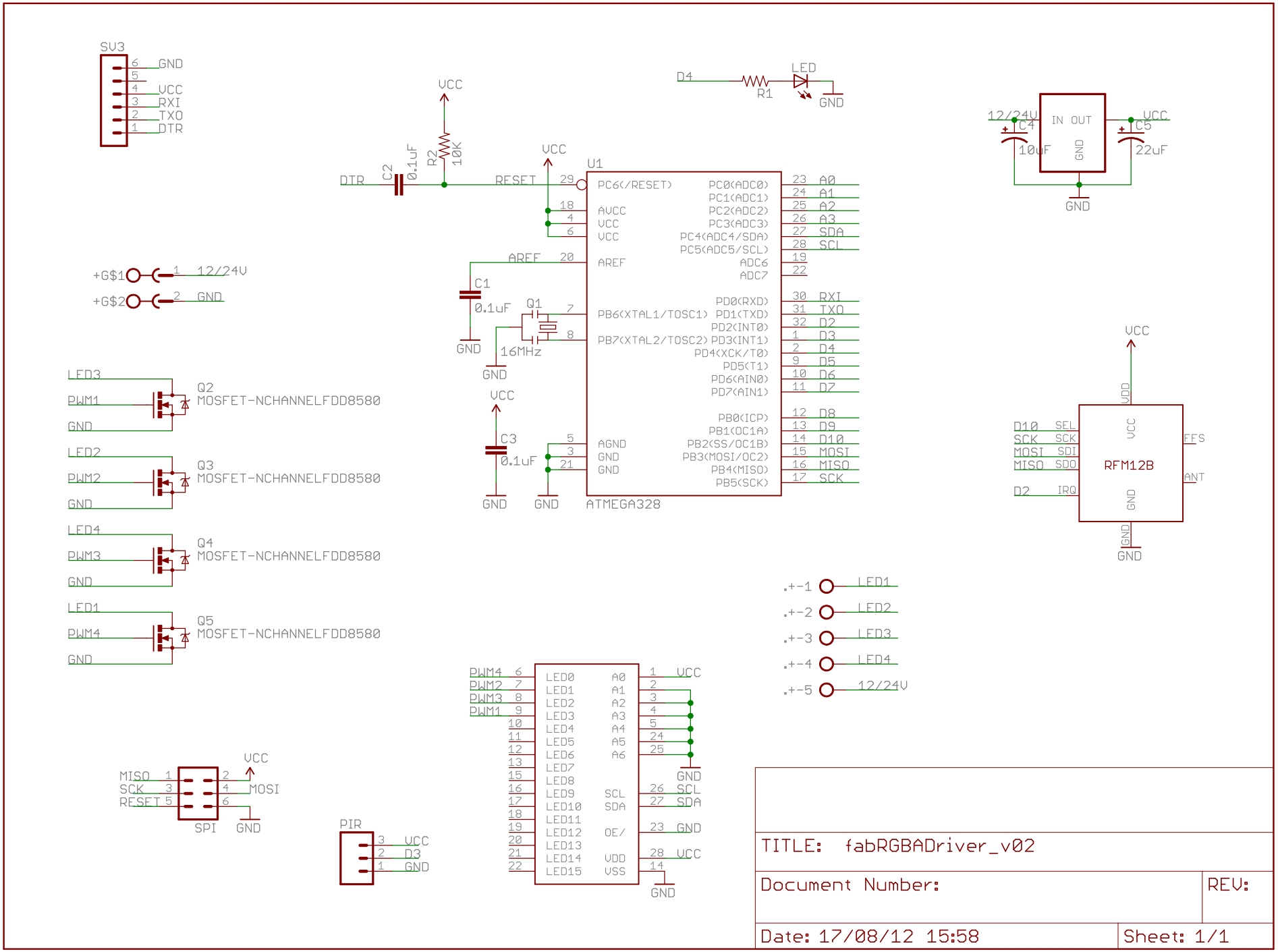
SV3
GND
VCC
RXI
TXO
DTR
VCC
R2
10K
C2
0.1uF
DTR
RESET
VCC
U1
PC6(/RESET)
AVCC
VCC
VCC
AREF
PB6(XTAL1/TOSC1)
PB7(XTAL2/TOSC2)
AGND
GND
GND
PC0(ADC0)
PC1(ADC1)
PC2(ADC2)
PC3(ADC3)
PC4(ADC4/SDA)
PC5(ADC5/SCL)
ADC6
ADC7
PD0(RXD)
PD1(TXD)
PD2(INT0)
PD3(INT1)
PD4(XCK/T0)
PD5(T1)
PD6(AIN0)
PD7(AIN1)
PB0(ICP)
PB1(OC1A)
PB2(SS/OC1B)
PB3(MOSI/OC2)
PB4(MISO)
PB5(SCK)
ATMEGA328
A0
A1
A2
A3
SDA
SCL
RXI
TXO
D2
D3
D4
D5
D6
D7
D8
D9
D10
MOSI
MISO
SCK
D4
R1
LED
GND
12/24V
IN OUT
GND
C4
10uF
C5
22uF
VCC
GND
+G$1
12/24V
+G$2
GND
AREF
C1
0.1uF
GND
Q1
16MHz
GND
VCC
C3
0.1uF
GND
GND
LED3
PWM1
GND
Q2
MOSFET-NCHANNELFDD8580
LED2
PWM2
GND
Q3
MOSFET-NCHANNELFDD8580
LED4
PWM3
GND
Q4
MOSFET-NCHANNELFDD8580
LED1
PWM4
GND
Q5
MOSFET-NCHANNELFDD8580
VCC
VDD
D10 SEL
SCK SCK
MOSI SDI
MISO SDO
D2 IRQ
VCC
RFM12B
GND
FFS
ANT
GND
GND
.+-1
LED1
.+-2
LED2
.+-3
LED3
.+-4
LED4
.+-5
12/24V
PWM4
PWM2
PWM3
PWM1
LED0
LED1
LED2
LED3
LED4
LED5
LED6
LED7
LED8
LED9
LED10
LED11
LED12
LED13
LED14
LED15
A0
A1
A2
A3
A4
A5
A6
SCL
SDA
OE/
VDD
VSS
VCC
GND
SCL
SDA
GND
VCC
GND
MISO
SCK
RESET
VCC
MOSI
GND
SPI
PIR
VCC
D3
GND
TITLE: fabRGBADriver_v02
Document Number:
REV:
Date: 17/08/12 15:58
Sheet: 1/1