MM

Maintenance Manual

ASSU/8/9 010V

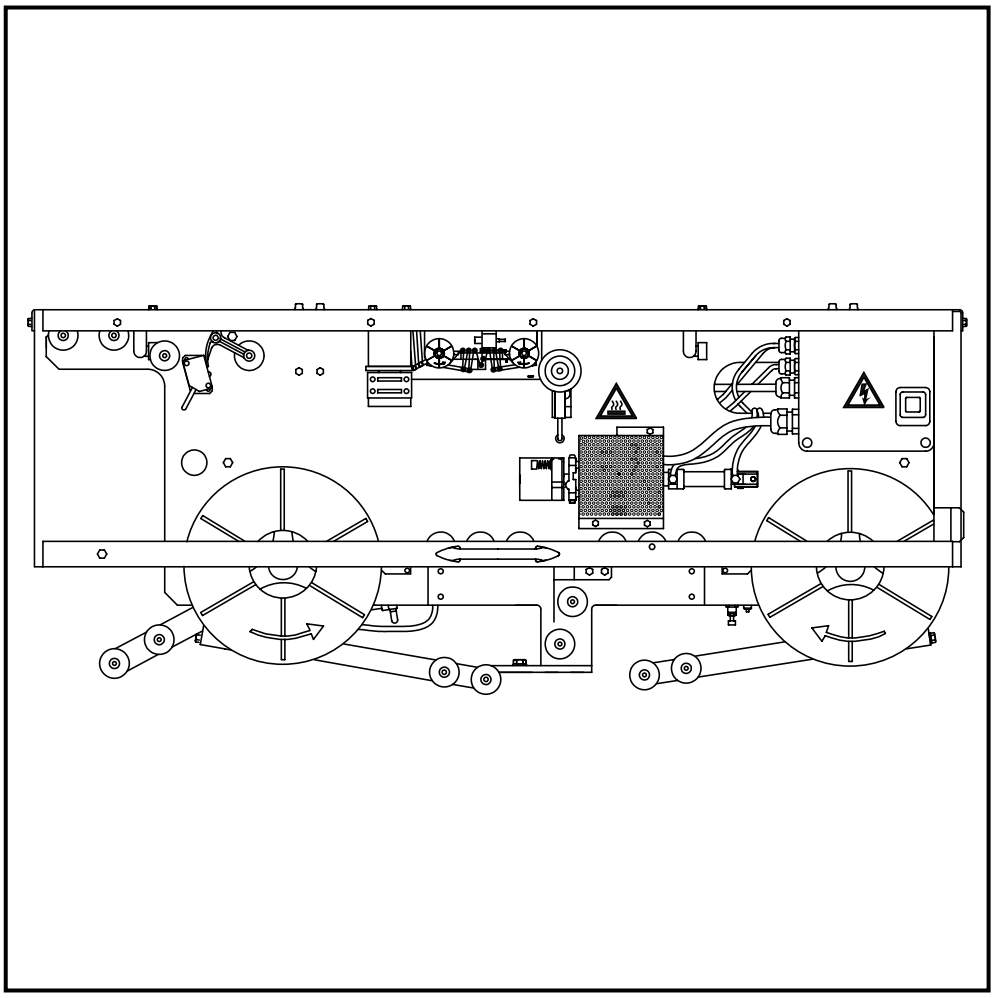

2.28233401.fro

Tetra Pak

Doc No. MM-82334-0101

This document is valid for:

Series No/ Machine No Sign.

Automatic Strip Splicing Unit
ASSU/8/9
1260536-010V

For:

TBA/8 100V
TBA/8 LSC 010V
TBA/9 140V

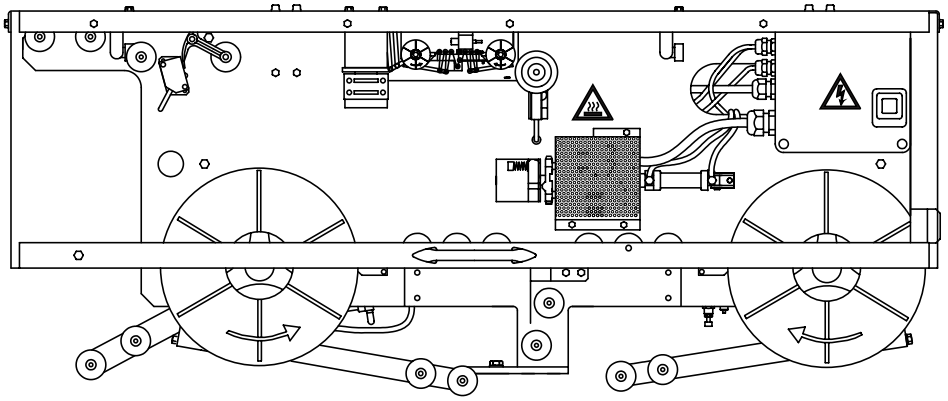

2.28233401.fro

Issue 9705

Doc No. MM-82334-0101

Tetra Pak

Tetra Brik Packaging Systems

Introduction

Equipment information 2
Document information 3
How to use this manual 4
Abbreviations used in this manual 6

Safety precautions

Hazard information 8
General 8
Mandatory signs 9
Danger and warning signs 10
Personnel 12
General safety precautions 13
Hygiene 13
High voltage 13
Doors, covers and guards 14
Chemical products 15
Personal protective equipment 15
General emergency procedures 15
Equipment for lifting and moving loads 16

1 ASSU/8/9

1-1 ASSU/8/9 - description 18
1.1 Hub jumbo 19
1.1-1 Hub jumbo - check 19
1.1-2 Hub jumbo - change ball bearings. 21
1.2 Brake arms 22
1.2-1 Brake arms - check functioning 22
1.2-2 Brake arms - set. 23

2.28233401TOC

1.3 Strip magazine 24

1.3-1 Strip magazine - check rolls. 24

1.3-2 Strip magazine - set proximity switches 25

1.4 Splicing magazine 27

1.4-1 Splicing magazine - check 27

1.4-2 Splicing magazine - change cylinder 29

1.4-3 Splicing magazine - set 30

1.5 Splicing device 31

1.5-1 Splicing device - check functioning. 31

1.5-2 Splicing device - check 32

1.5-3 Splicing device - set 34

1.5-4 Splicing device - change bracket 35

1.5-5 Splicing device - change knife 37

1.5-6 Splicing device - change ball bushing 38

1.5-7 Splicing device - change dowels 39

1.5-8 Splicing device - change cylinder 40

1.6 Strip guide (TBA/8, TBA/8 LSC) 41

1.6-1 Strip guide (TBA/8, TBA/8 LSC) - check roll. . . . 41

1.6-2 Strip guide (TBA/8, TBA/8 LSC) - set roll 42

1.7 Fastening bracket (TBA/9) 43

1.7-1 Fastening bracket (TBA/9) - check roll 43

1.7-2 Fastening bracket (TBA/9) - set roll 44

2 Electrical equipment

2-1 Electrical equipment - description 46

2.1 Temperature regulator 47

2.1-1 Temperature regulator - set 47

2.28233401TOC

3 Checklist overview

Checklist overview - description 50
TPMS - description 51
Checklist overview 52

2.28233401TOC

This page intentionally left blank

2.28233401TOC

Introduction

To ensure maximum safety, always read the *Safety precautions* section before doing any work on the equipment or making any adjustments.

2.28233401.int

Equipment information

Intended use

The purpose of this Tetra Pak equipment is to automate the splicing of the LS strip on TBA/8 and TBA/9 filling machines.

Manufacturer

This Tetra Pak equipment has been manufactured by:

Tetra Brik Packaging Systems AB
Ruben Rausings gata
221 86 LUND
Sweden

or by:

Tetra Brik Packaging Systems S.p.A.
Via Delfini 1
411 00 MODENA
Italy

Service

Contact the nearest Tetra Pak service station.

Identification

The figure shows an example of the equipment sign.The sign carries data needed when contacting Tetra Pak concerning this specific equipment.

CE marking

This equipment complies with the basic health and safety regulations of the European Economic Area (EEA).

2.28233401.int

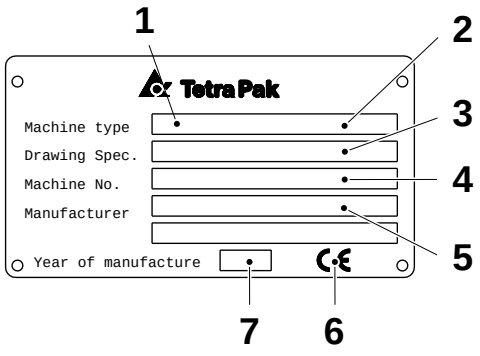

1 Machine type
2 Volume
3 Drawing specifications
4 Machine serial number
5 Manufacturer
6 CE mark
7 Year of manufacture

Document information

Purpose of Maintenance Manual (MM)

The purpose of this Maintenance Manual is to provide the service technicians with:

- all **scheduled maintenance** procedures listed in the checklists
- information for **unscheduled maintenance** such as:
  - additional maintenance procedures
  - functional descriptions
  - system descriptions

The same **structure**, **codes** and **denominations** used in this MM, are used in the Spare Part Catalogue (SPC) and in the checklists.

It is important to:

- keep the manual for the life of the equipment
- pass the manual on to any subsequent holder or user of the equipment.

Design modifications

The directives in this document are in accordance with the design and construction of the equipment at the time it was delivered from the Tetra Pak production plant.

Technical publications

- Electrical Manual (EM)
- Installation Manual (IM)
- Maintenance Manual (MM)
- Operation Manual (OM)
- Spare Parts Catalogue (SPC)

Additional copies can be ordered from the nearest Tetra Pak service station.

When ordering technical publications, always quote the **document number** that can be found in the machine specification document.

(Cont'd)

2.28233401.int

(Cont'd)

Number of pages

This document contains a total of *54* pages.

Copyright © 1997
Tetra Brik Packaging Systems

All rights reserved. No part of this document may be reproduced or copied in any form or by any means without the written permission of Tetra Brik Packaging Systems.

How to use this manual

Page layout

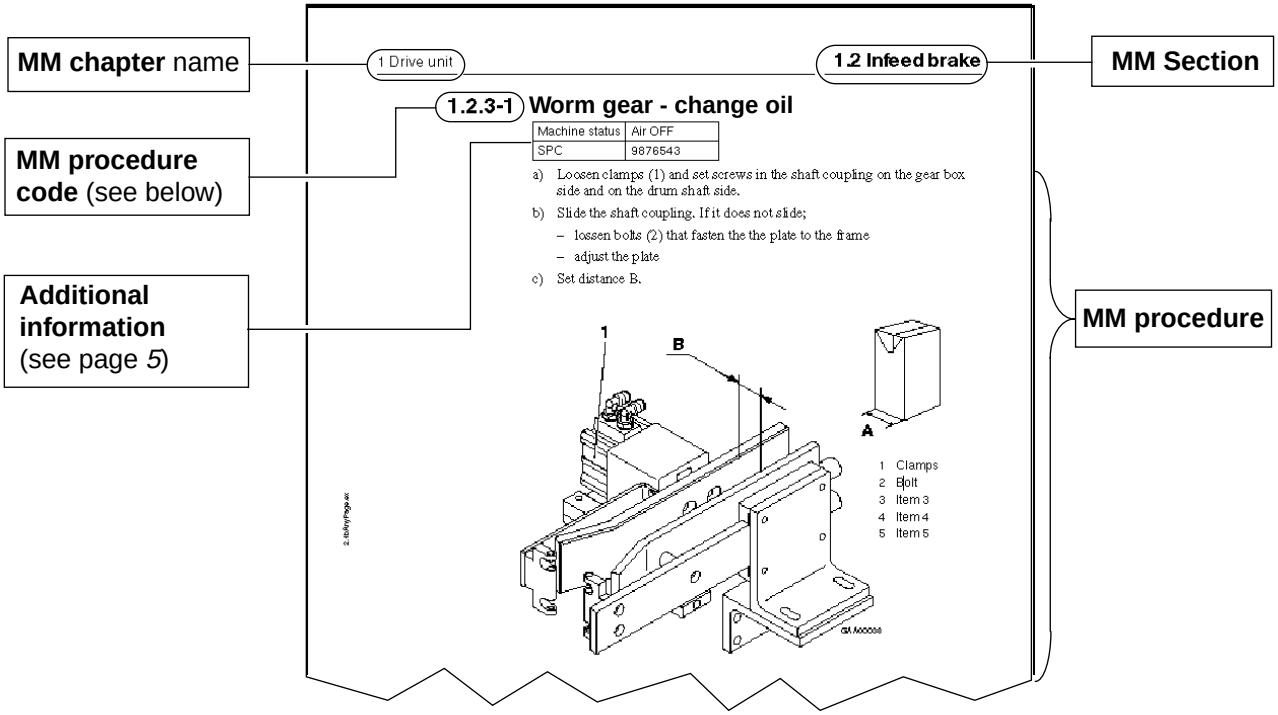

(Cont'd)

(Cont'd)

MM procedure codes

The maintenance procedures are indicated as shown by the example below:

1.2.3-1 Worm gear - change oil

MM chapter or Main machine group

MM section or Machine group

MM sub section or Machine subgroup

Consecutive procedure number

Sub section name

Clarification of activity

Type of activity.
The following standard activities are used:

- **adjust**
- **assemble**
- **bleed**
- **calibrate**
- **change**
- **charge**
- **check**
- **clean**
- **count**
- **delime**
- **dismantle**
- **empty**
- **fill**
- **lubricate**
- **measure**
- **overhaul**
- **record**
- **remove**
- **set**
- **synchronise**
- **tighten**
- **turn**

and

- **description**
- **diagram**

2.28233401.int

Additional information

The following additional information is included in each MM procedure as applicable.

1.2.3-1 Worm gear - change oil

Machine status	Main power **On**
Consumables - lubricant	TP No. 92645-23
Tools - template	TP No. 123456-1
SPC reference	123456-010V

Machine status
Machine status during the procedure.
If nothing is stated, all supplies are **Off**, and the packaging material and the strip have been removed.

Consumables
Consumables are items which are needed in addition to replacement parts.

SPC reference
Reference to the Spare Parts Catalogue (SPC). The number is to be found in the SPC index.

Tools
Tools needed, that are **not** normally carried by a service technician (for example a template needed in a setting procedure).

Abbreviations used in this manual

ASSU	Automatic Strip Splicing Unit
LS	Longitudinal Strip
SPC	Spare Parts Catalogue
TBA	Tetra Brik Aseptic
TPMS	Tetra Pak Maintenance System

2.28233401.int

Safety precautions

To ensure maximum safety, always read this section carefully before doing any work on the equipment or making any adjustments.

2.28233401.sp

Hazard information

General

Failure to observe information marked “DANGER!” **puts your life in danger**.

Failure to observe information marked “WARNING!” can result in **personal injury and/or serious damage to or destruction of equipment**.

Caution! Failure to observe information marked “Caution!” can result in **damage to equipment**.

2.28233401.sp

Mandatory signs

Wear eye protection	**Wear hearing protection**
Wear head protection	**Wear protective gloves**
Disinfect hands/gloves	

2.28233401.sp

Danger and warning signs

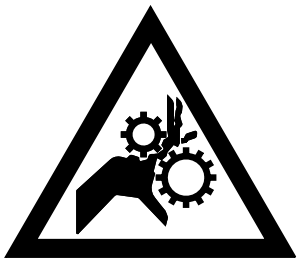 **Risk of entanglement!**	**Risk of corrosion!**
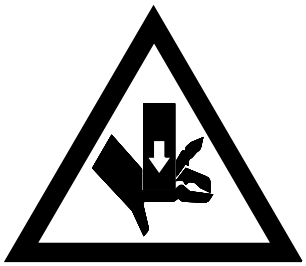 **Risk of crushing!**	**Risk of cutting/amputation!**
Risk of burns!	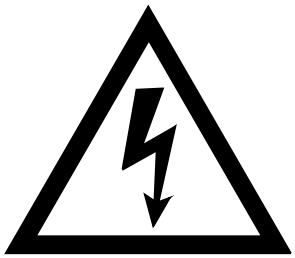 **Risk of electrocution!**

(Cont'd)

2.28233401.sp

(Cont'd)

Risk of crushing!	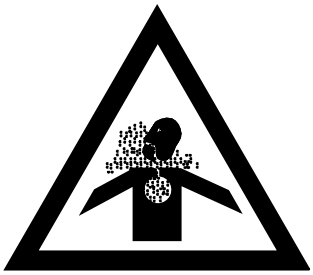 **Risk of intoxication!**
Risk of falling!	

2.28233401.sp

Personnel

Only skilled or instructed persons are allowed to work on the equipment.

The manufacturer declines all responsibility for injury or damage if the instructions in this manual are not followed.

Personnel are responsible for:

- the equipment and the work area around the equipment
- all personnel in the vicinity of the equipment
- making sure that all safety devices are fully operational

Personnel must regard all electrical equipment as live. Before carrying out maintenance or repair work, switch the equipment off at the mains power and padlock the switch.

Electricians should be certified according to local regulations and have experience of similar types of installations, proven skills in reading and working from drawings and cable lists, and knowledge of local safety regulations regarding power and automation. Work with the electrical equipment must be performed only by skilled or instructed technicians. According to EN 60204.3,55 a skilled person is:

– *An individual with technical knowledge or sufficient experience to enable that individual to avoid hazards which electricity can create*.

2.28233401.sp

General safety precautions

Wear hearing protection while the equipment is running.

Hygiene

It is important to keep hands and/or gloves clean.

Disinfect hands and/or gloves before touching the packaging material, the strip(s) or any other equipment part that may come into contact with the product.

Clean the platforms, the ladder and the area around the equipment.

To avoid production faults, it is important that the packaging material and the strip(s) never touch the floor, the platform or the area around the equipment.

High voltage

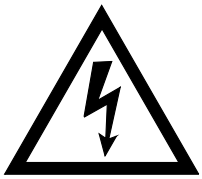

Work with parts marked with this symbol must be performed by **skilled or instructed** persons **only**.

Make sure that the mains power is disconnected before starting any work on electrical equipment marked with this symbol.

In case of accident, call for medical attention immediately.

2.28233401.sp

Doors, covers and guards

WARNING!

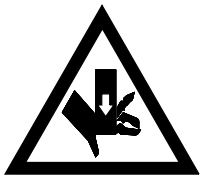

WARNING!

Make sure that all doors, covers and guards are in place and functioning.

Never remove covers or guards while the equipment is operating.

Certain doors, covers and guards are fitted with safety switches. These switches are part of the safety system and must **never** be bridged, by-passed or otherwise made non-operational.

Never stop the equipment by opening a door or cover with a safety switch.

The equipment may perform a reciprocating movement during the first few seconds after a stop. Some equipment parts may also be hot.

In case of accident, call for medical attention.

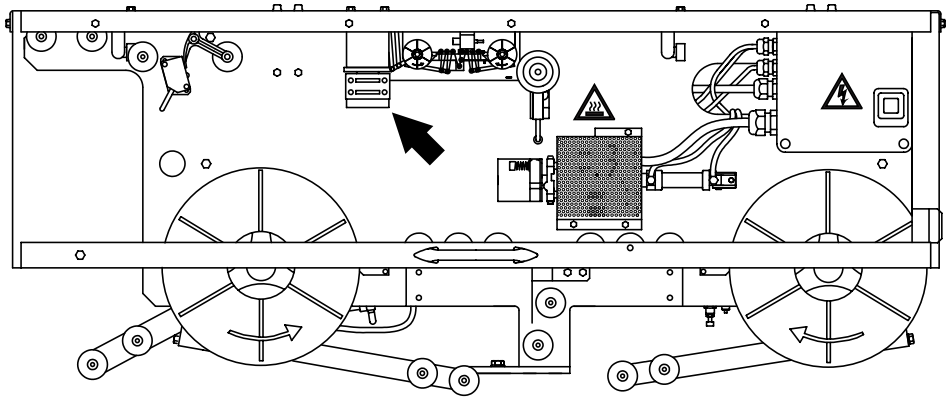

2.28233401.sp

Chemical products

Risk of personal injury!
Certain chemical products are toxic and/or inflammable. Carefully follow the instructions on the container label.

Follow the supplier's instructions for handling and disposal of the chemical products.

Personal protective equipment

- **Safety goggles**, TP No. 779130-102
- **Apron**, TP No. 90303-5
- **Shoes** made of PVC, PE plastic or rubber
- **Protective gloves** made of neoprene, TP No. 90303-4

Before starting work with any chemical products, make sure that:

- the showers work
- a portable, TP No. 90303-6, or wall-mounted eyewash device is available at or near each machine site
- there are additional washing facilities

2.28233401.sp

General emergency procedures

If you accidentally **swallow** chemical products, drink large amounts of lukewarm water.

If you get splashes or vapour from chemical products in your **eyes**, wash your eyes thoroughly with lukewarm water for 15 minutes (keeping eyelids wide apart).

If chemical products come into contact with **skin** or **clothes**:

- rinse immediately with plenty of water
- if skin burns appear, call for medical attention immediately
- thoroughly wash clothes before wearing them again

If you experience irritation or pain due to having **inhaled** chemical products vapour:

- leave the affected area and get some fresh air
- if the symptoms get worse, call for medical attention

Equipment for lifting and moving loads

WARNING!

Make sure that the capacity of the lifting equipment is adequate and that the equipment itself is in good working order.

If lifting tackle has to be joined to make up the necessary lengths, make sure that the joins are secure and have the same lifting capacity as the rest of the tackle.

Always engage the safety clip on lifting hooks to prevent the tackle from slipping off.

Use ropes or poles to steady and manoeuvre loads. Do **not** use hands or feet.

Make sure that the route and the destination are free from obstacles before moving a suspended load. It must be possible to lower the load to the floor quickly and safely in an emergency.

When depositing loads, keep the lifting equipment in place until the stability of the load has been checked.

2.28233401.sp

1 ASSU/8/9

2.2B3341A00.en

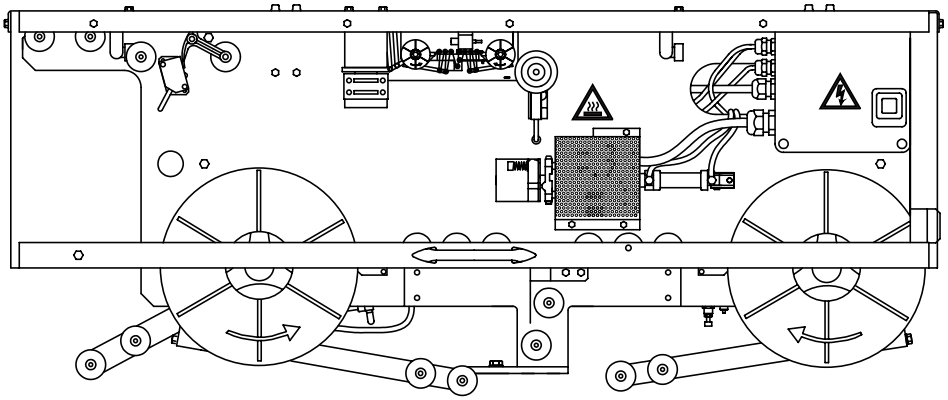

1-1 ASSU/8/9 - description

SPC reference	1260536-010V

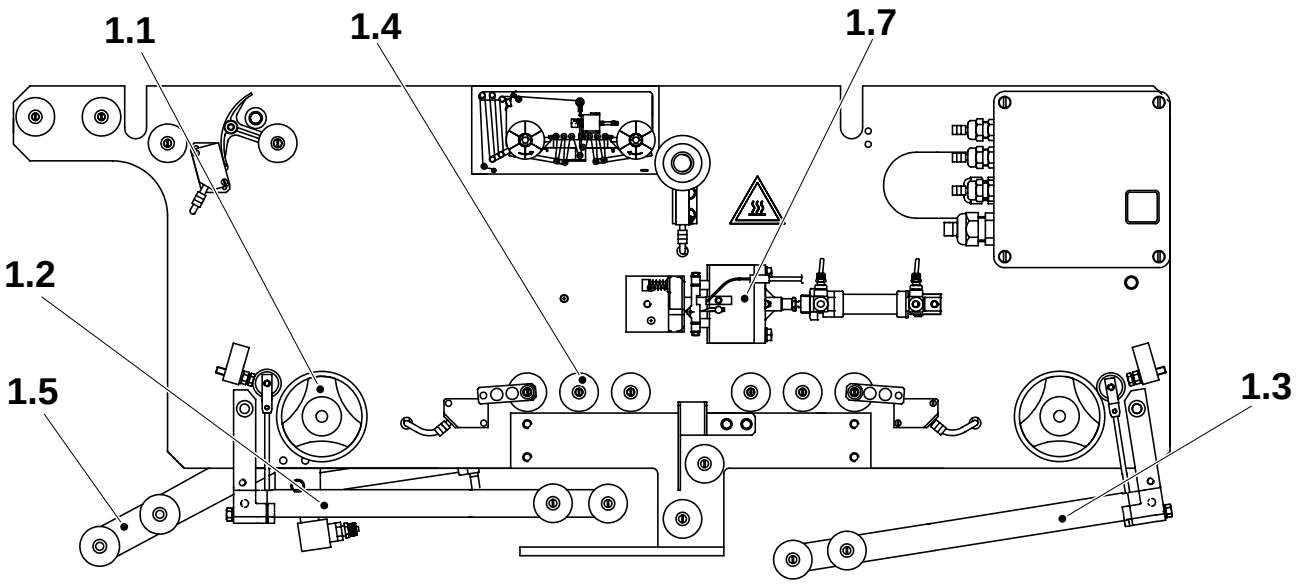

1.6

1.8

1.9

1.10

1.1 Hub jumbo
1.2 Brake arm left
1.3 Brake arm right
1.4 Strip magazine
1.5 Splicing magazine
1.6 Cover
1.7 Splicing device
1.8 Pneumatic circuit
1.9 Strip guide (TBA/8, TBA/8 LSC)
1.10 Fastening bracket (TBA/9)

2.2B3341A00.en

1.1 Hub jumbo

SPC reference	537329-010V

1.1-1 Hub jumbo - check

Consumables - locking fluid	TP No. 90157-16
SPC reference	537329-010V

Check that the hubs rotate freely. Change the ball bearings as required; see *1.1-2 Hub jumbo - change ball bearings*.

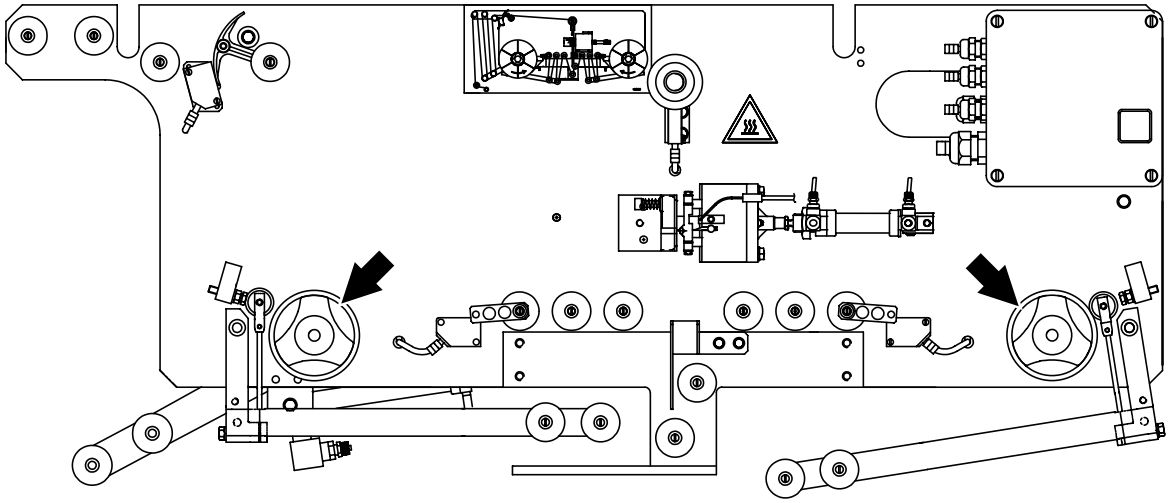

2.2B3341A01.en

(Cont'd)

(Cont'd)

a) Fit the bobbins (1) on the hubs and check that they are properly locked by the spring loaded screws (2).

b) If required, unscrew the spring loaded screws (2) from the hub holes (3), change them, and fit the new ones with locking fluid.

c) Set the spring loaded screws so that the top of the screw bodies (4) is approximately level with the surface of the hub.

d) Finely set the spring loaded screw so that the bobbin can be fitted over the bobbin holder without excess force but does not come off easily.

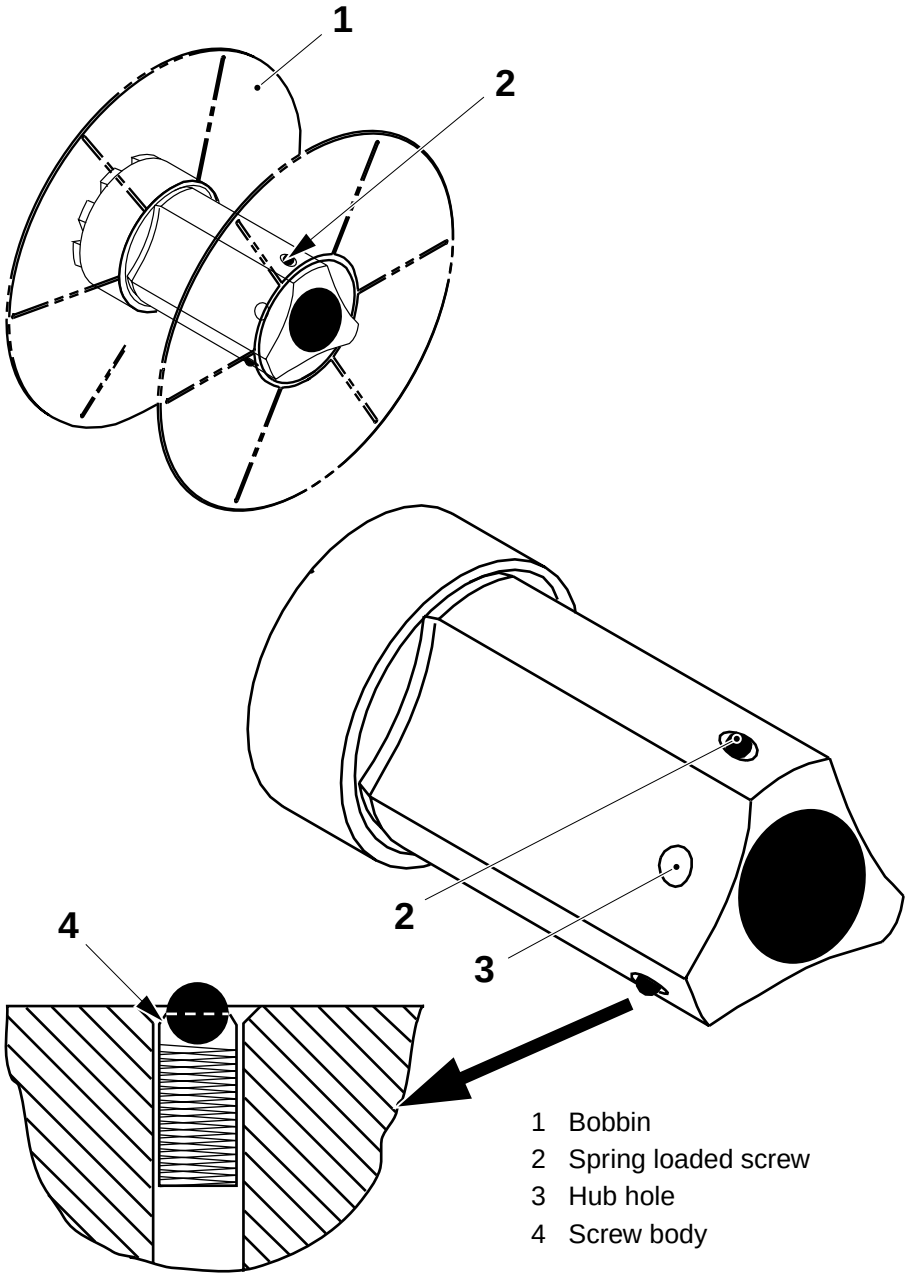

2.2B3341A01.en

1.1-2 Hub jumbo - change ball bearings

SPC reference	537329-010V

a) Remove the plastic plug (1), the circlip (2) and the hub (3).

b) Press out the ball bearings (4) from the hub and change them.

c) Assemble in the reverse order.

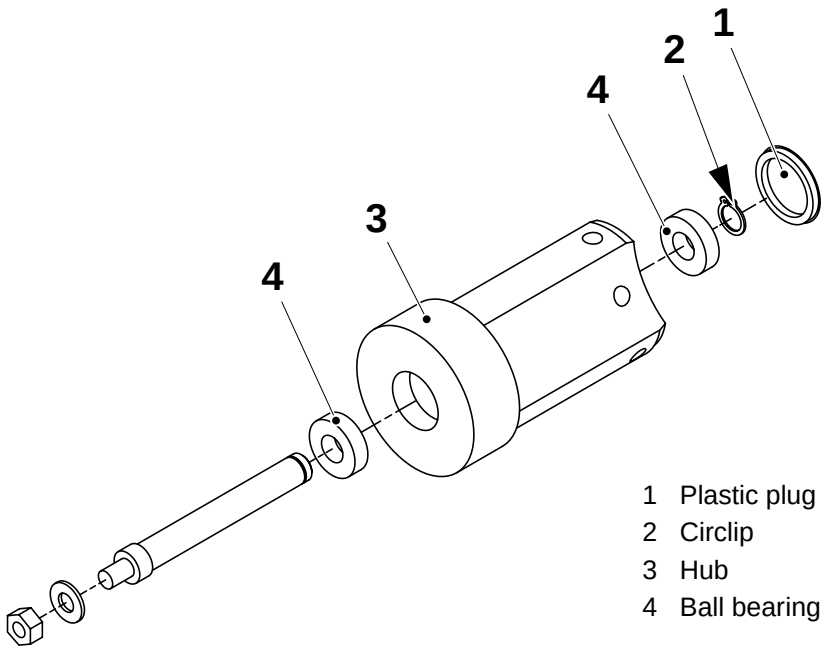

1 Plastic plug
2 Circlip
3 Hub
4 Ball bearing

2.2B3341A01.en

1.2 Brake arms

SPC reference	1282818-010V 1282818-010V

1.2-1 Brake arms - check functioning

SPC reference	1282818-010V 1282818-010V

a) On both brake arms, check that the O-rings (1) are clean and intact and that they brake the hub (3) when the arm is lowered. Clean or change the O-rings as required.

b) Make sure that the arm follows the strip tension.

c) If required, check as follows.

– Make sure that the roll (4) is intact and that it rotates and slides freely.

– Make sure that the roll (5) is intact and that it rotates freely.

Clean or change the rolls as required.

d) Make sure that the brake arm is easy to turn. If not, remove the circlip (2) and the washer. Remove the arm and press out the bushing from the arm. Clean or change the bushing and assemble in the reverse order.

e) If required, set the brake arm; see *1.2-2 Brake arms - set.*

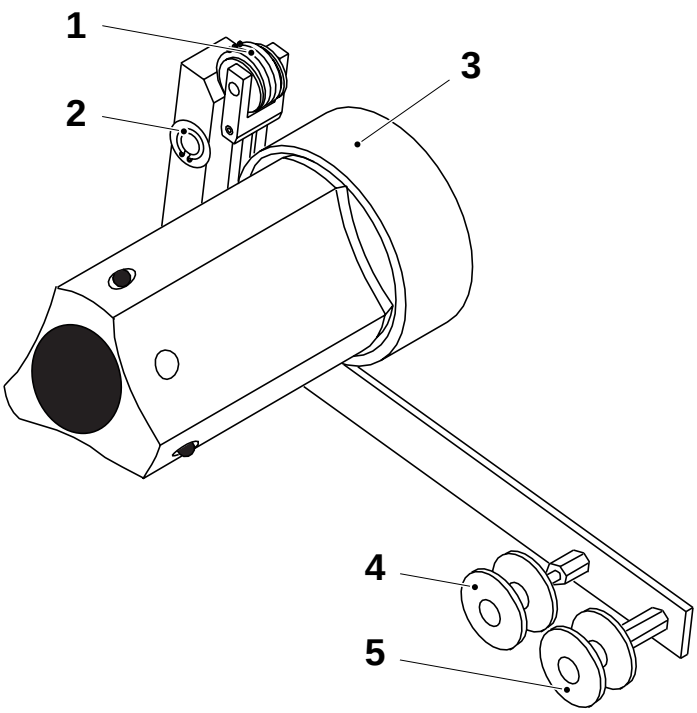

1 O-ring
2 Circlip
3 Hub
4 Roll
5 Roll

2.2B3341A01.en

1.2-2 Brake arms - set

SPC reference	1282818-010V 1282818-010V

a) Loosen the screw (3) and set the springs (2) to distance **A** from the bottom of the arm (1).

b) Tighten the screw (3).

c) Set the stop screw (4) to distance **B**.

d) Repeat item *a)* - *c)* on the other brake arm.

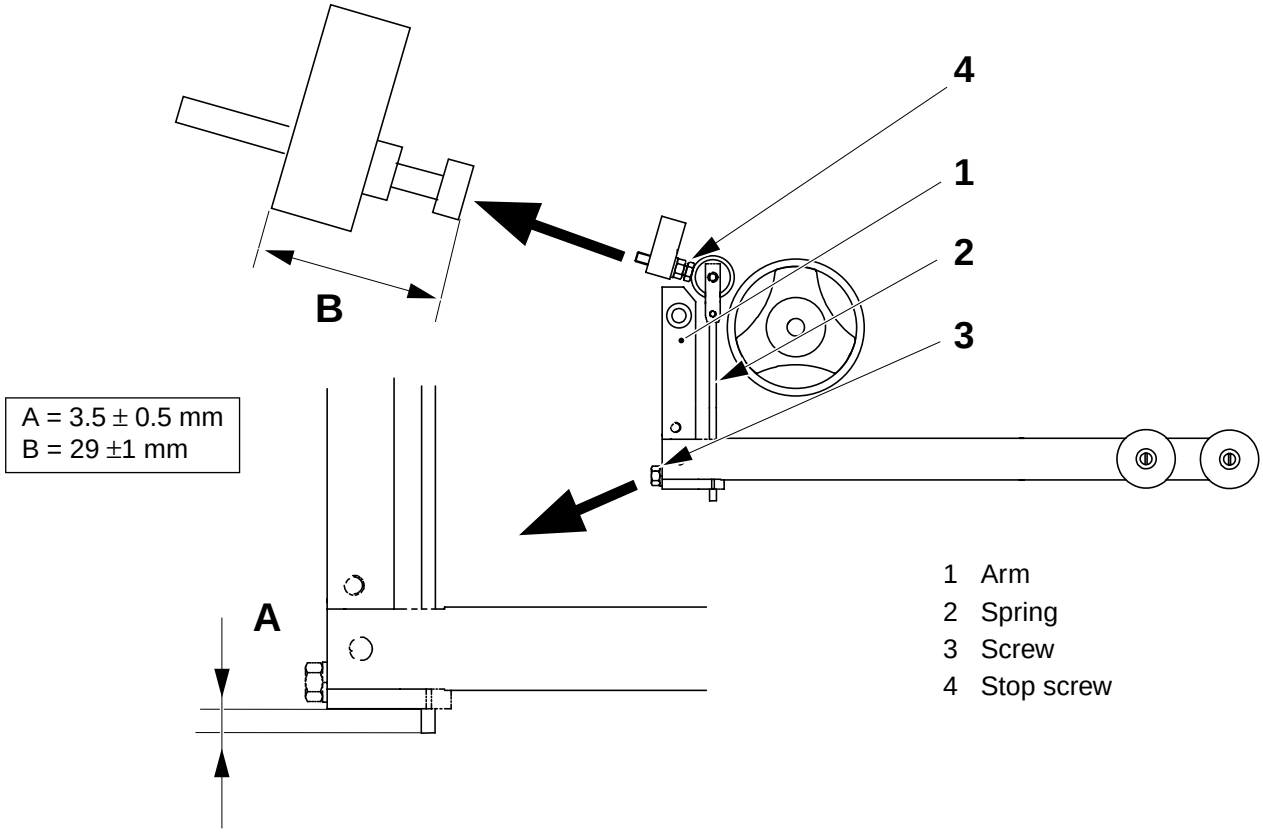

2.2B3341A01.en

1.3 Strip magazine

1.3-1 Strip magazine - check rolls

Machine status	Power **On**
SPC reference	1260372-010V

a) Check that the rolls (1) rotate freely. Clean or change the axle pins and/or rolls as necessary.

b) Check that the rolls (2) rotate and slide freely. Clean or change the axle pins and/or rolls as necessary.

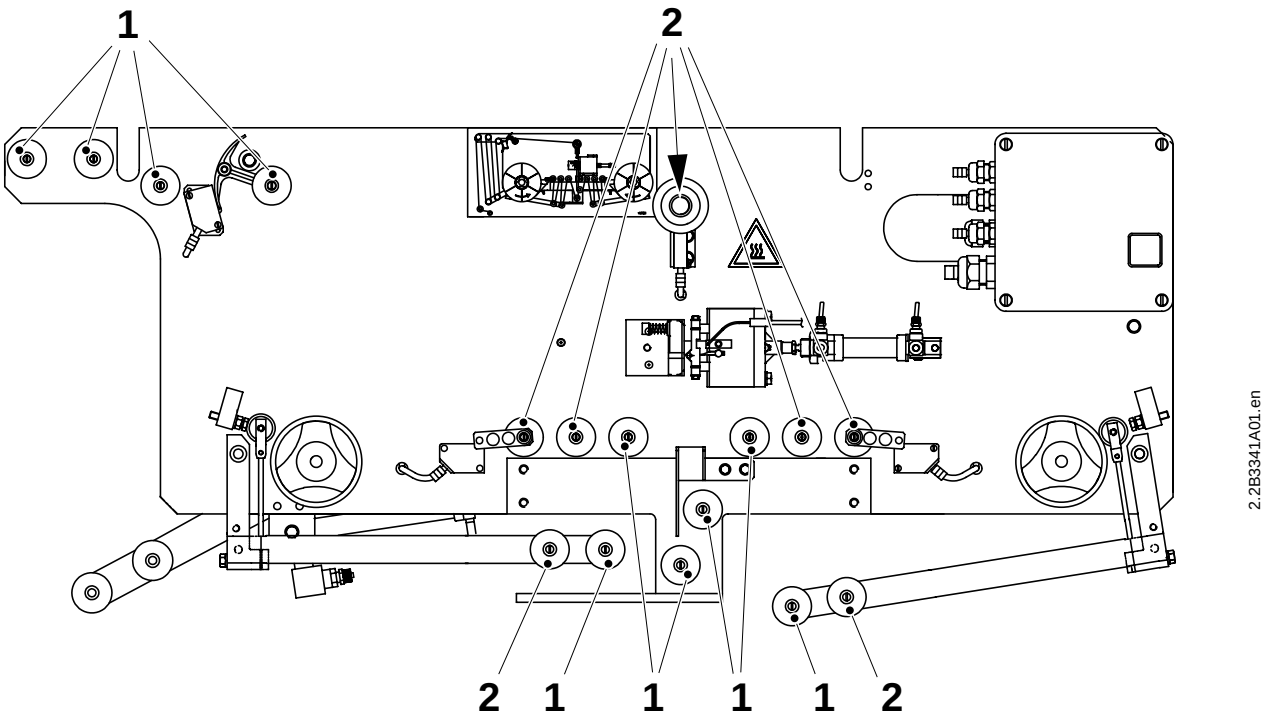

1 Roll
2 Roll

1.3-2 Strip magazine - set proximity switches

Machine status	Power **On**
SPC reference	1260372-010V

a) Attach approx. 1 metre of LS strip to an empty jumbo bobbin (1) with a piece of adhesive tape.

b) Fit the empty bobbin on the hub (2) and pass the strip under the finger (3) and over the roll (4). Pull the strip so that it forms a straight line between the centre of the jumbo bobbin and the top of the roll.

c) Loosen the two fixing screws and set the vertical position of the proximity switch (5) so that the finger (3) is just lifted off the proximity switch. Tighten the two fixing screws.

d) Set the finger (3) at distance **A** from the mounting plate.

e) Repeat items *a) - d)* for the other hub and proximity switch.

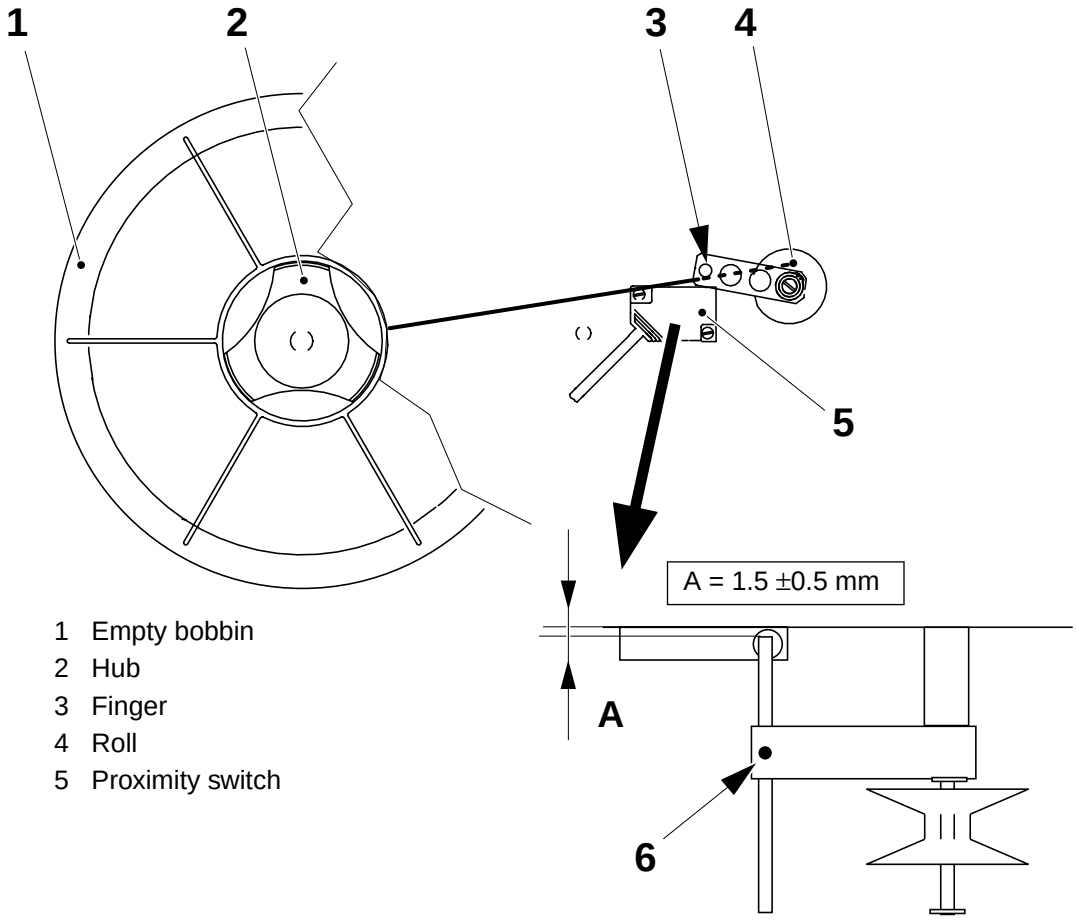

1 Empty bobbin
2 Hub
3 Finger
4 Roll
5 Proximity switch

2.2B3341A01.en

(Cont'd)

(Cont'd)

f) Lift the arm (6) up until it contacts the damper (7) and set distance **B** between the arm and the proximity switch (8) by shifting the proximity switch.

g) Swing the arm and make sure that distance **B** remains equal for the full movement of the arm. Shift the proximity switch (8) as required.

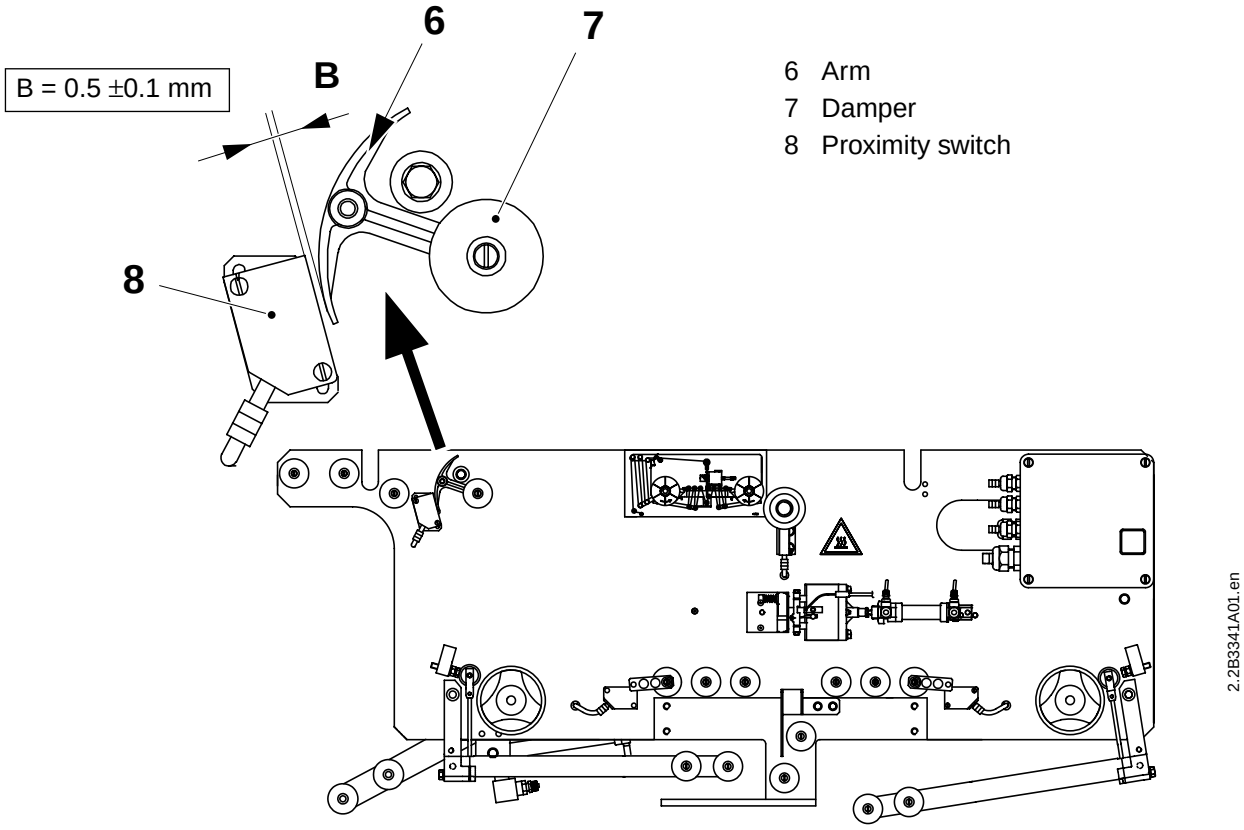

1.4 Splicing magazine

SPC reference	1260373-010V

1.4-1 Splicing magazine - check

SPC reference	1260373-010V

a) Check that the rolls (arrows) are clean and that they rotate freely. Clean or change as required.

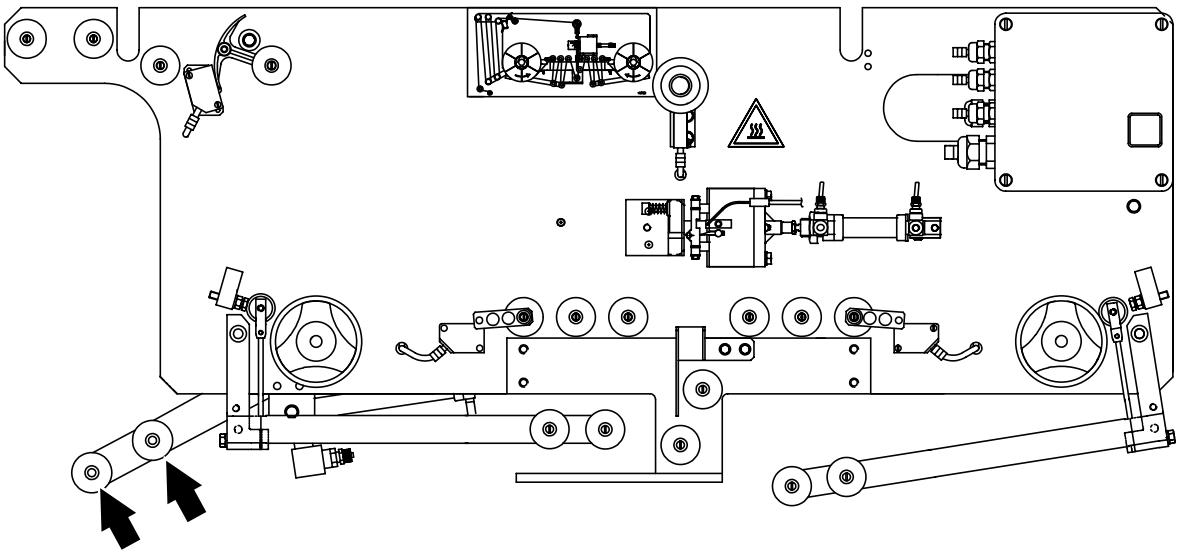

2.2B3341A01.en

(Cont'd)

(Cont'd)

b) Check that the cylinder piston (1) moves freely. Change the cylinder as required; see *1.4-2 Splicing magazine - change cylinder*.

c) Check that the flange bushings (2) are clean. Clean the flange bushings as required.

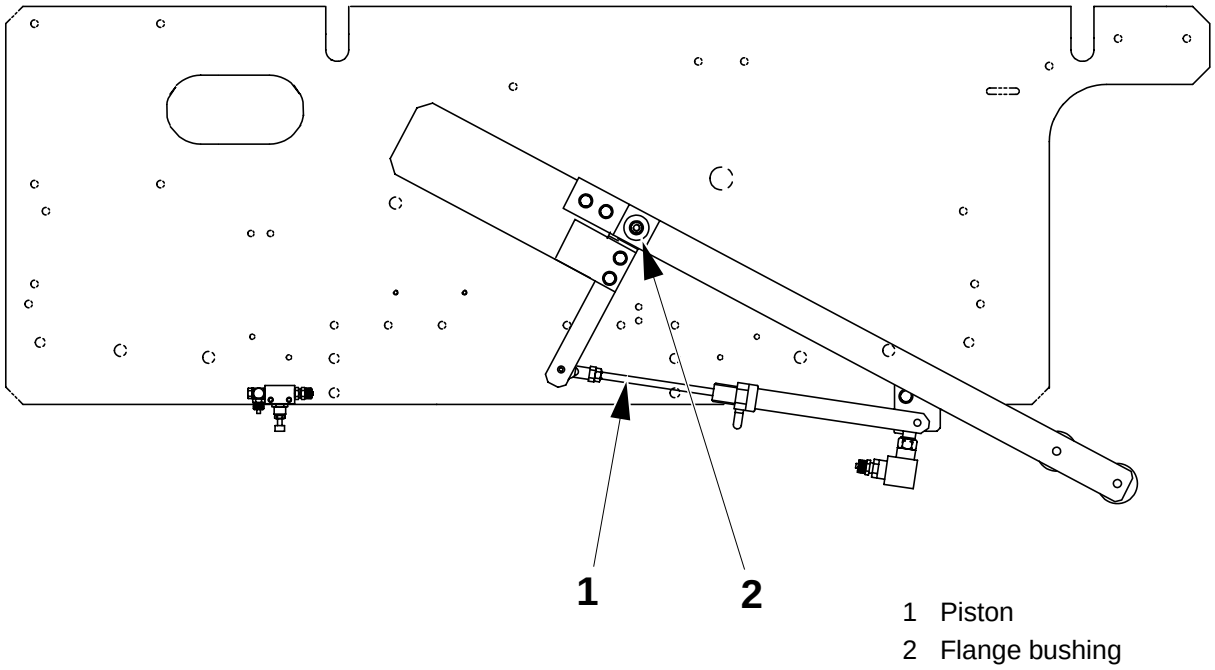

1.4-2 Splicing magazine - change cylinder

SPC reference	1260373-010V

a) Disconnect the air connection (1).

b) Unscrew the screw (2) and remove the screw and washer.

c) Remove the circlip (3) and pull off the complete assembly and cylinder.

d) Unscrew the reamed bolt (4) remove the cylinder assembly.

e) From the cylinder assembly remove:

- the end link (5)
- the valve (6).

f) Change the cylinder and assemble in the reverse order.

g) Set the cylinder; follow the procedure in *1.4-3 Splicing magazine - set*.

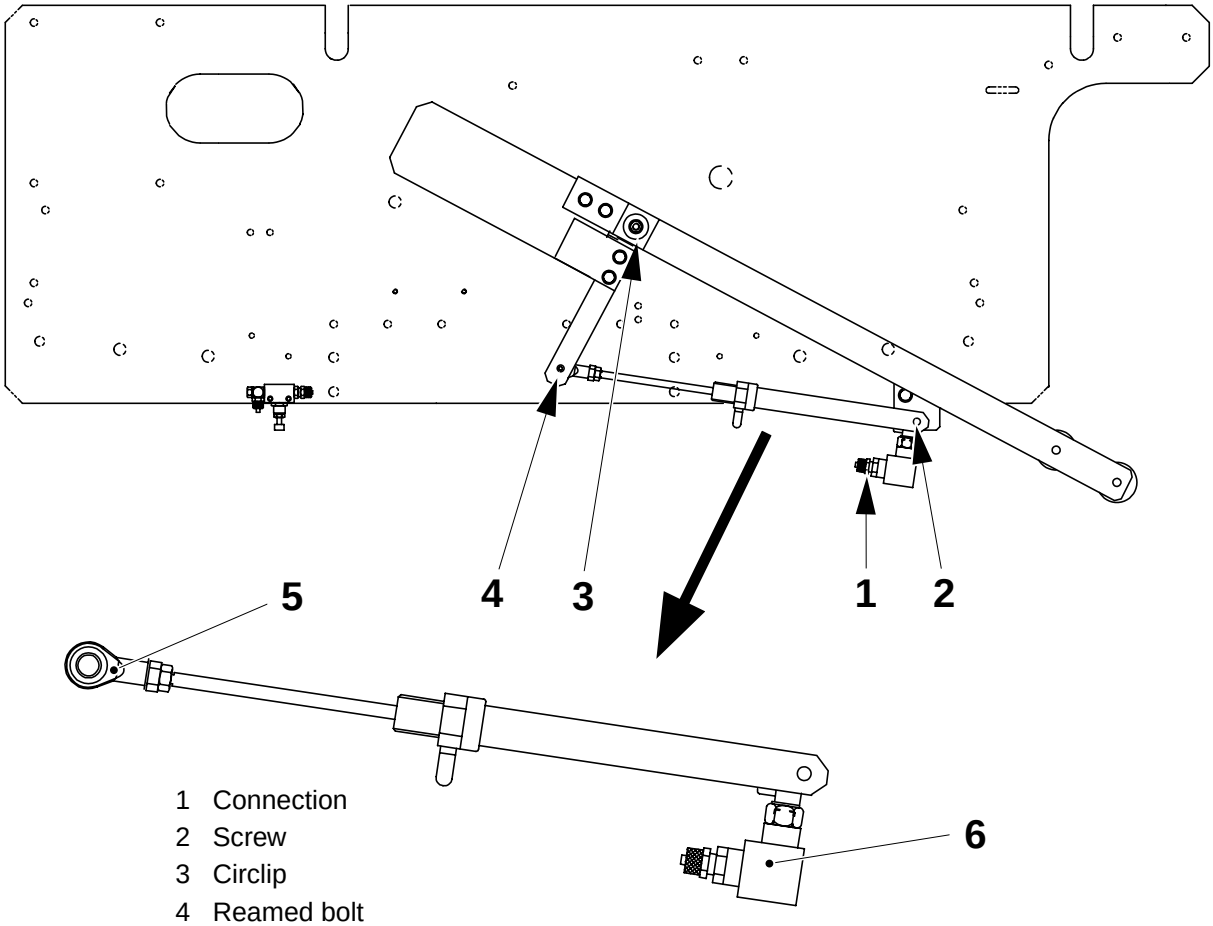

1 Connection
2 Screw
3 Circlip
4 Reamed bolt
5 End link
6 Valve

2.2B3341A01.en

1.4-3 Splicing magazine - set

Machine status	**Preheating I**
SPC reference	1260373-010V

Cylinder

Push the **Manual strip splice** button (with the safety doors closed). The cylinder piston (2) should reach its fully extended position 30 - 35 seconds after the splice. If necessary, proceed as follows:

a) Make sure that the regulators of solenoid valves 910 and 911 on the upper valve panel inside the machine body are fully open

b) Adjust on the valve (1) as required.

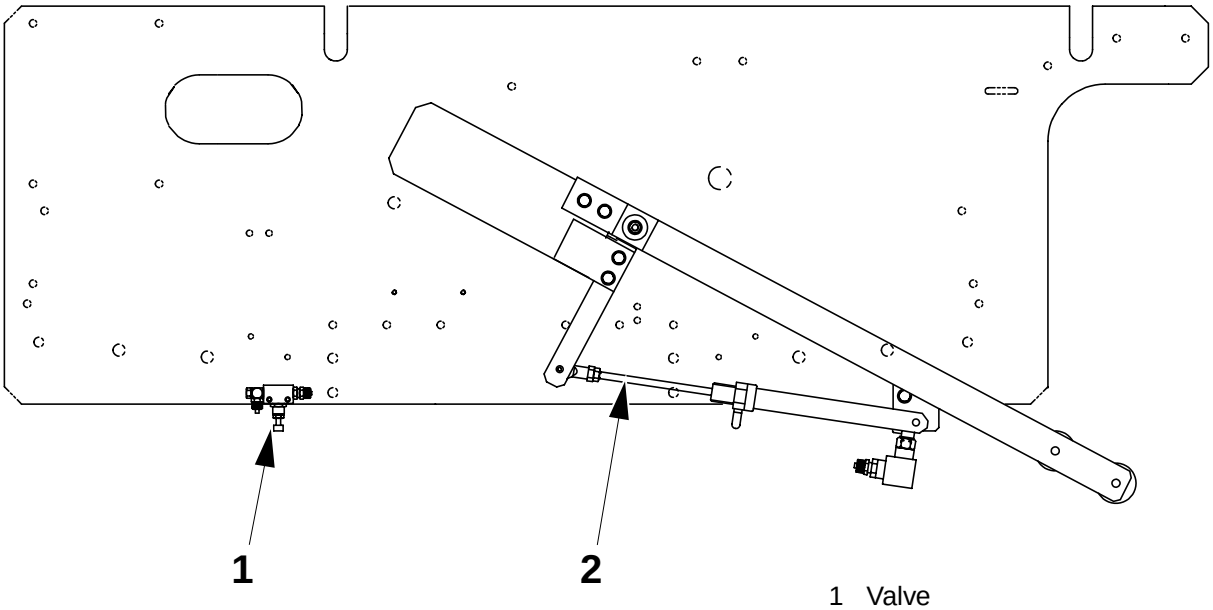

1 Valve
2 Piston

2.2B3341A01.en

1.5 Splicing device

SPC reference	580043-010V

1.5-1 Splicing device - check functioning

Machine status	**Preheating I**
SPC reference	580043-010V

Note! The **manual strip splice** button will not work unless the safety cover is closed.

a) Thread the strip from both bobbins, so that the splicing device is prepared for splicing (see the *OM*). Close the safety cover.

b) Push the **Manual strip splice** button and check the splice function.

c) Make sure that the cylinder piston (3) extends **immediately** when the button is pressed. If necessary, set the flow control valve (4); see *1.5-3 Splicing device - set*.

d) Make sure that the cylinder piston retracts slowly and completely, and that the strip is released from the heating block (2), **before** the arm (1) of the splicing magazine starts to rise. If necessary, set the flow control valve (5); see *1.5-3 Splicing device - set*.

e) If the splicing unit does not splice correctly, see *1.5-2 Splicing device - check*.

2.2B3341A01.en

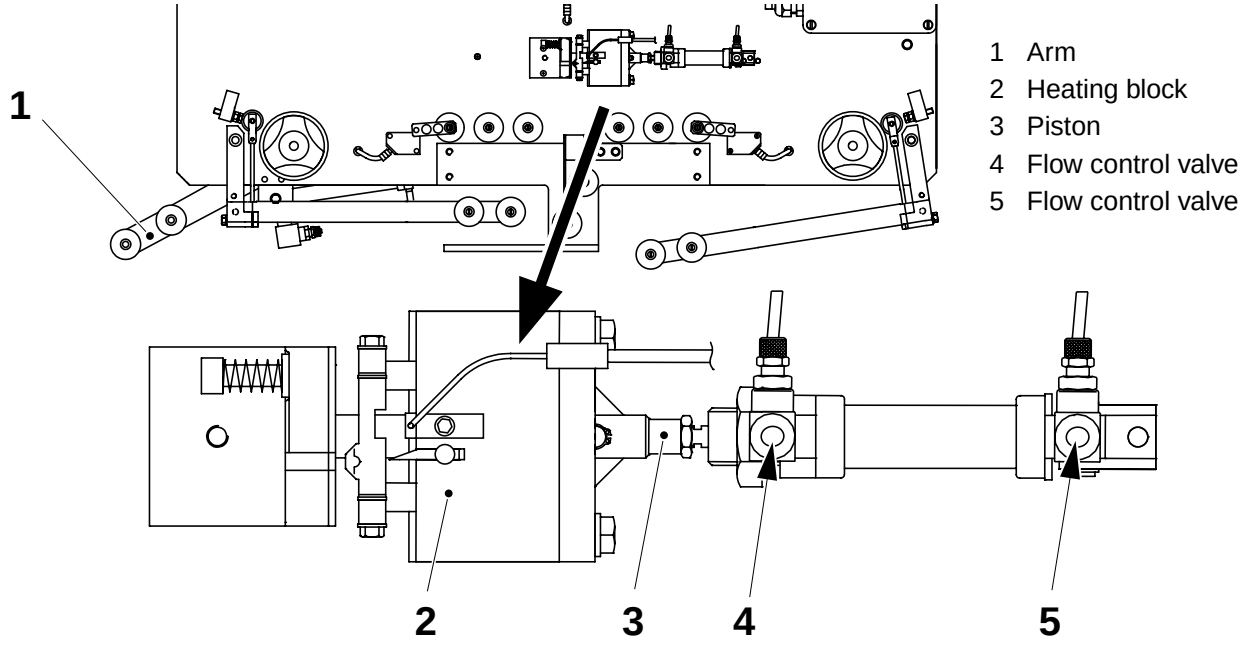

1.5-2 Splicing device - check

SPC reference	580043-010V

a) Remove the touch guard from the splicing unit.

b) Check that the rubber (1) on the bracket is clean and intact. Clean or change the bracket as required; see *1.5-4 Splicing device - change bracket*.

c) Check that the strip guide (2) is fixed to the dowels (3) at distance **A** from the ends. Check also that the pin of the strip guide is aligned with the slot in the bracket (5). Set as required; see *1.5-3 Splicing device - set*.

d) Check that the dowels (3) are clean and intact and that they slide freely into the heating block (4). If the dowels do not slide freely, remove the strip guide (2) and repeat the check. If the dowels slide freely without the strip guide, set the strip guide; see *1.5-3 Splicing device - set*. If the dowels do not slide freely even without the strip guide, clean or change them as required; see *1.5-7 Splicing device - change dowels*.

e) Check that the heating block (4) slides freely. Change the ball bushing as required; see *1.5-6 Splicing device - change ball bushing*.

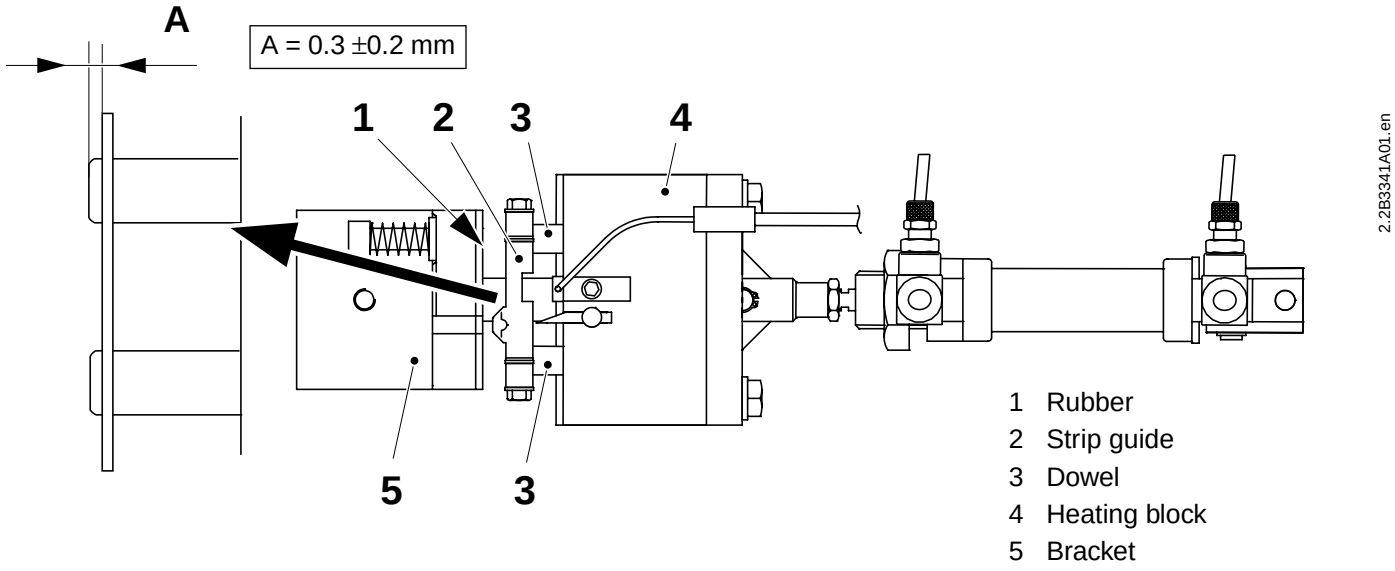

(Cont'd)

(Cont'd)

f) Check that the knife (6) is clean, intact and that the edge is sharp. Clean or change as required; see *1.5-5 Splicing device - change knife*.

g) Check that the fabric (7) is clean and intact. Clean or change as required.

h) Check that the cylinder piston (8) moves freely. Change the cylinder as required; see *1.5-8 Splicing device - change cylinder*.

i) Fit the touch guard.

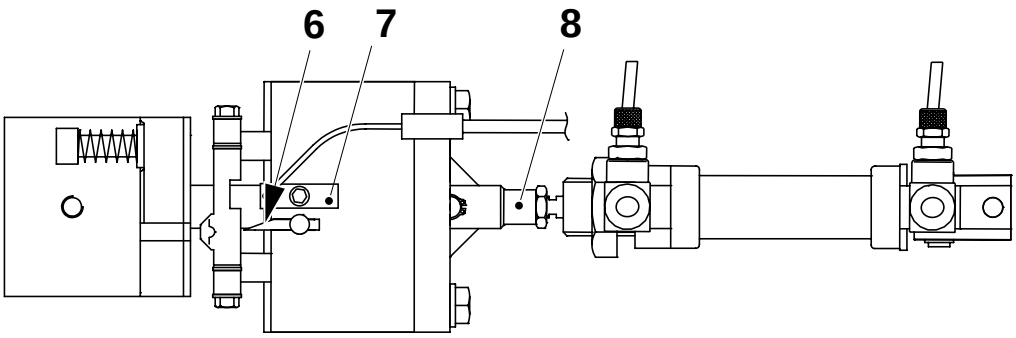

6 Knife
7 Fabric
8 Piston

2.2B3341A01.en

1.5-3 Splicing device - set

SPC reference	580043-010V

a) Remove the touch guard from the splicing unit.

b) Set the strip guide (2) at distance **A** from the ends of the dowels (3). Adjust as necessary by loosening the strip guide fixing screws and shifting the strip guide. Adjust the tightness of the strip guide fixing screws so that the strip guide is fixed to the dowels but does not interfere with the sliding of the dowels.

c) Set the pin of the strip guide (2) aligned with the slot in the bracket (1). Adjust as required by loosening the stop screw (7) and turning the heating block (4).

d) Set valve (5) fully open and then close it eight complete turns (360° x 8).

e) Set valve (6) fully open and then close it six complete turns (360° x 6).

f) Set the temperature of the splicing device. See *2.1-1 Temperature regulator - set*.

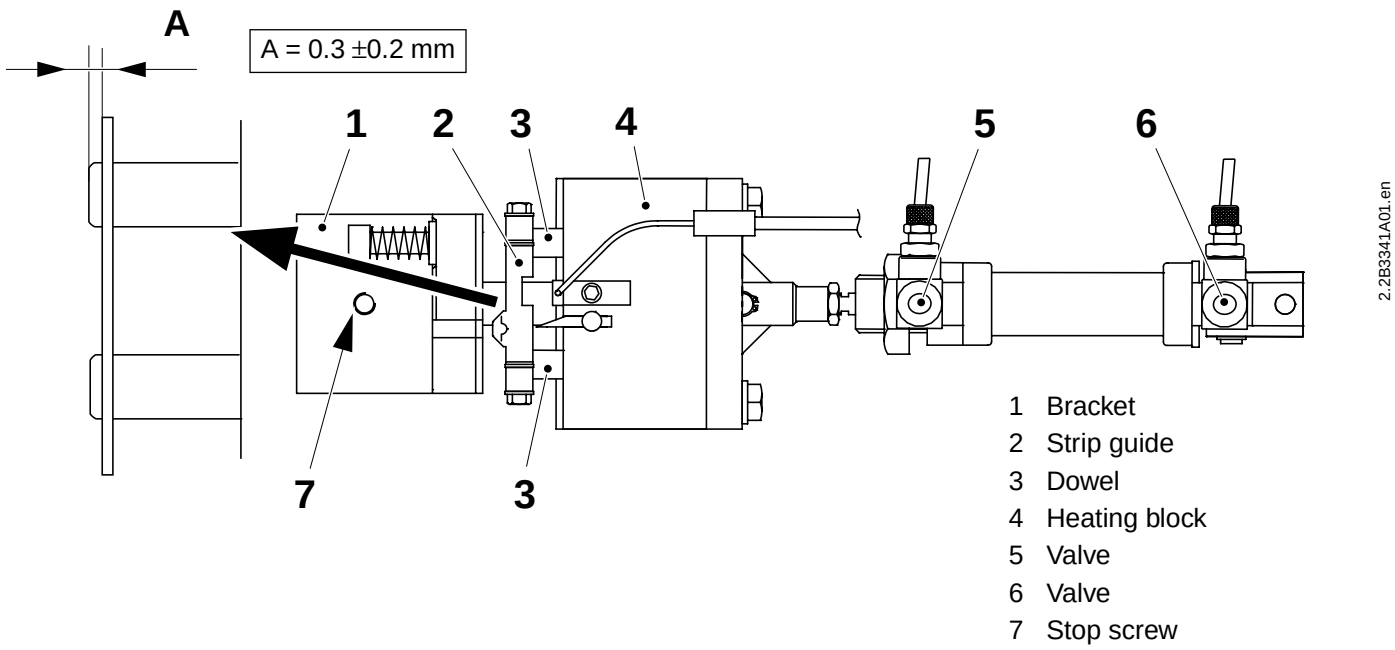

1.5-4 Splicing device - change bracket

SPC reference	580043-010V

a) Remove the touch guard (1) from the splicing unit.

Note! There are loose balls inside the ball bushing (6). Secure the top of the shaft (5) to the ball bushing with a piece of adhesive tape to prevent the shaft from falling out.

b) Unscrew the screws (2) and remove the washers.

c) Unscrew the stop screw (3) and slide the bracket (4) off the shaft (5).

d) Change the bracket and assemble in the reverse order.

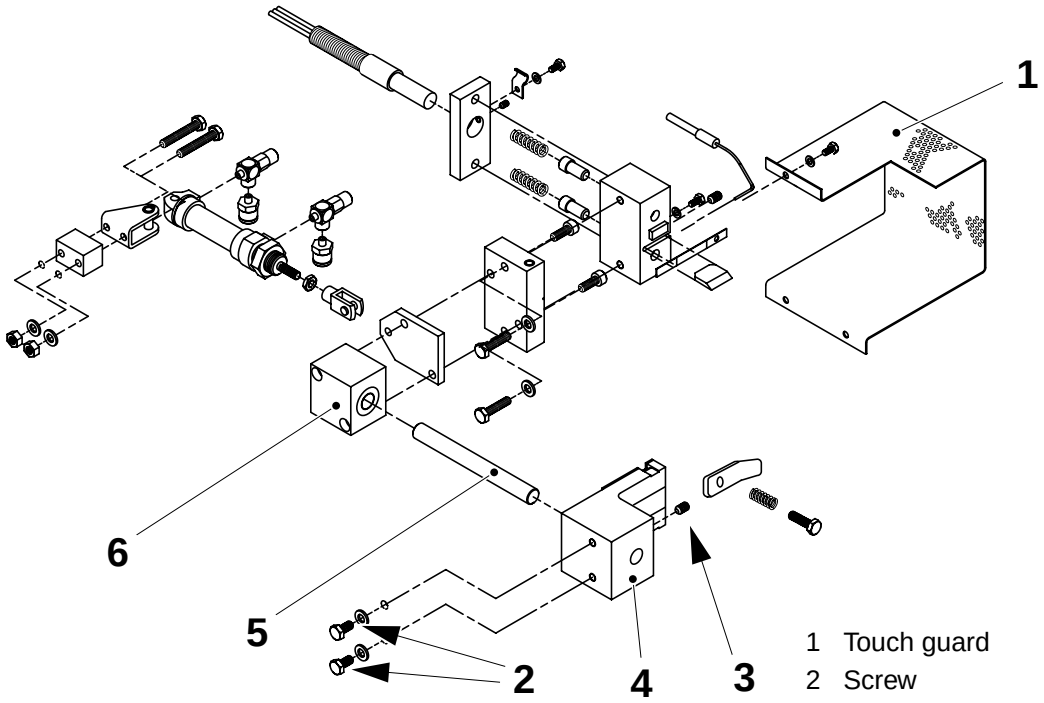

1 Touch guard
2 Screw
3 Stop screw
4 Bracket
5 Shaft
6 Ball bushing

(Cont'd)

2.2B3341A01.en

(Cont'd)

e) By means of screws (2), set the bracket (4) so that the knife on the heating block (7) slides into the centre of the slot in the bracket and so that the rubber surface of the bracket is perfectly parallel with the bottom surface of the heating block.

Note! Make sure that the strip guide is perfectly aligned with the slot in the bracket before tightening the stop screw (3).

f) Set the end of the shaft (6) aligned with the bottom surface of the bracket (4) by means of stop screw (3).

g) Fit the touch guard (1).

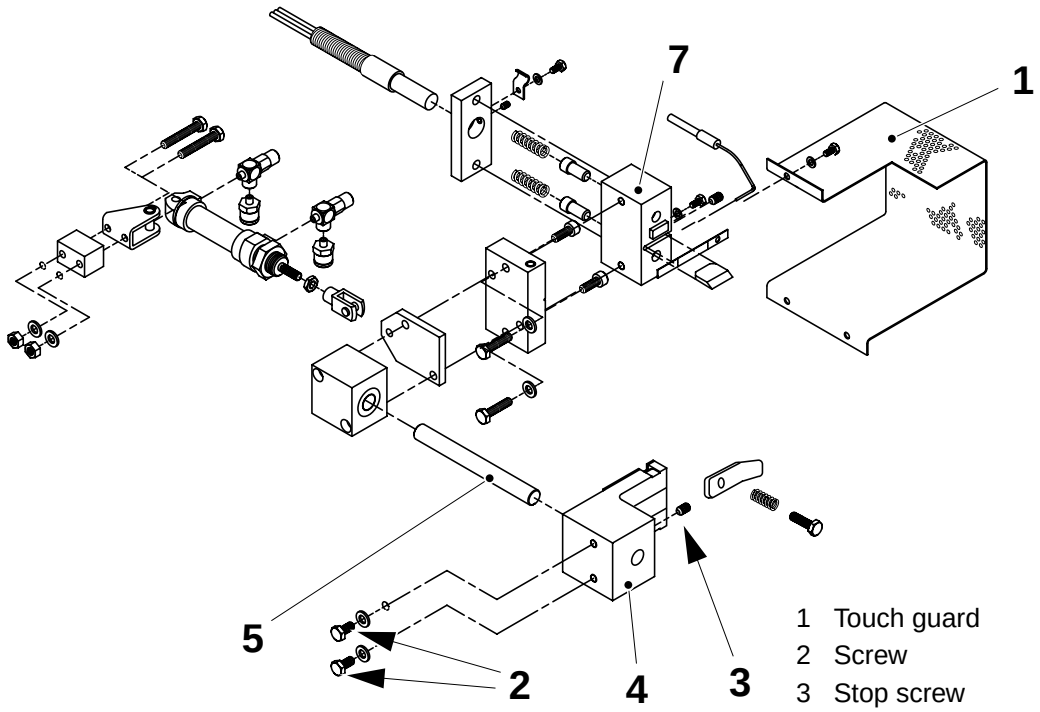

1 Touch guard
2 Screw
3 Stop screw
4 Bracket
5 Shaft
7 Heating block

2.2B3341A01.en

1.5-5 Splicing device - change knife

SPC reference	580043-010V

a) Remove the touch guard (1) from the splicing unit.

b) Unscrew the stop screw (2) and remove the knife (3).

c) Change the knife and assemble in the reverse order.

Note! Push the knife firmly into its seat in the heating block (4) before tightening the stop screw (2).

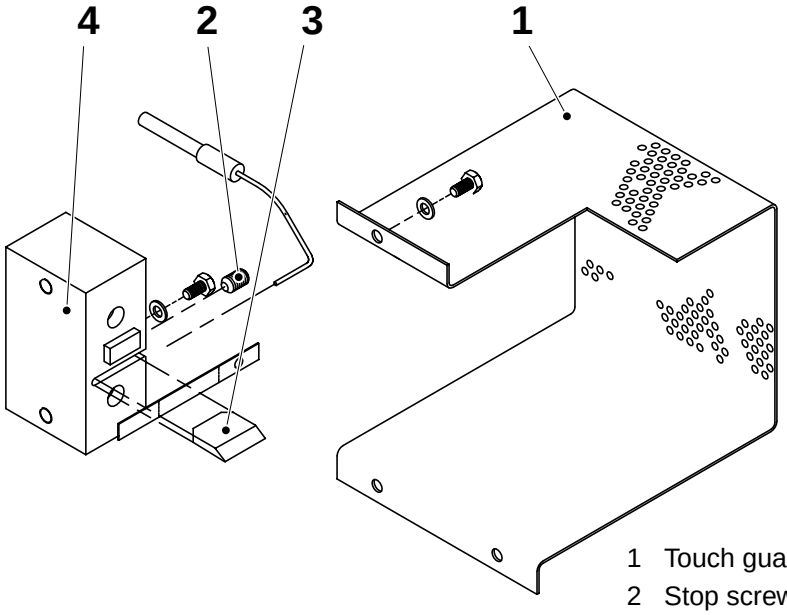

1 Touch guard
2 Stop screw
3 Knife
4 Heating block

2.2B3341A01.en

1.5-6 Splicing device - change ball bushing

SPC reference	580043-010V

a) Remove the touch guard (1) from the splicing unit.

b) Unscrew the screws (2) and move the heating block (3) aside.

c) Unscrew the screws (4) and move the cylinder aside.

d) Remove the ball bushing (5). Change the ball bushing.

Caution! The ball bushing has one raised line of balls. This line must engage in the groove on the shaft, or the shaft will push out the balls. See detail in figure.

Note! If required, the bracket (6) can be removed to facilitate assembly; follow the procedure in *1.5-4 Splicing device - change bracket*.

e) Assemble in the reverse order. Make sure that the knife enters freely into the slot in the bracket (6). If required, loosen the screws (2) and/or the bracket fixing screws and adjust the position of the heating block and/or of the bracket.

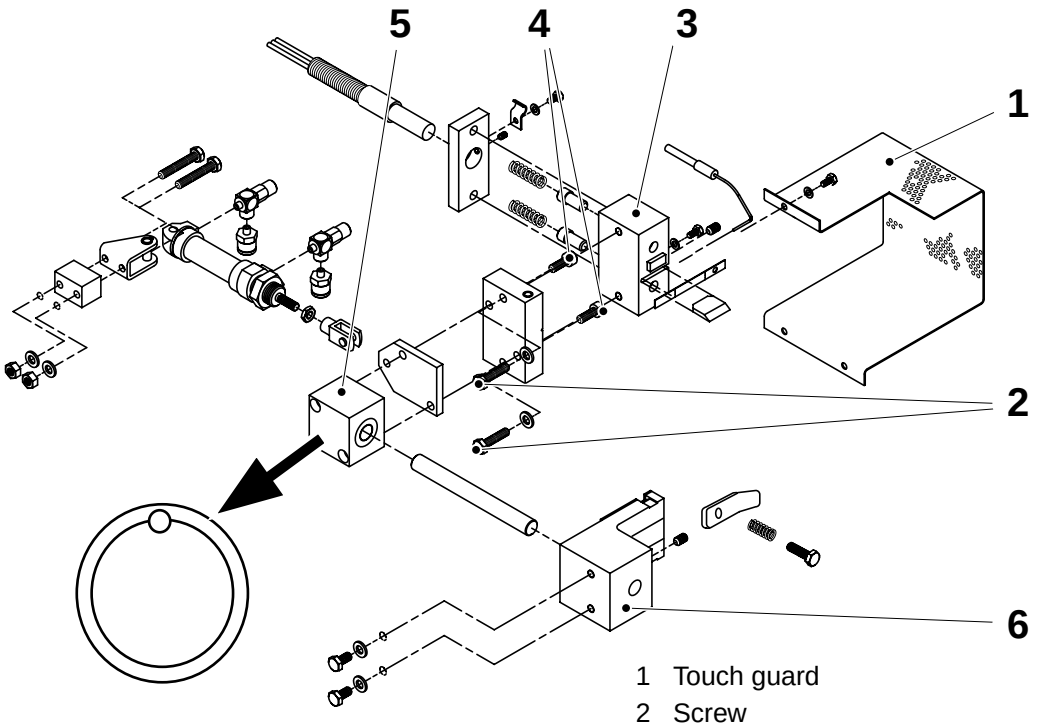

2.2B3341A01.en

1 Touch guard
2 Screw
3 Heating block
4 Screw
5 Ball bushing
6 Bracket

1.5-7 Splicing device - change dowels

Consumables - silicon paste	TP No. 90296-51
SPC reference	580043-010V

a) Remove the touch guard (1) from the splicing unit.

b) Unscrew the screw (2) and move the thermocouple (3) aside (without removing it).

c) Unscrew the stop screw (4) and pull out the heating element (5).

d) Unscrew the screws (6) and remove the washers and lock plate (7).

e) Remove the strip guide (8).

f) Remove the springs (9) and the dowels (10).

g) Change the springs as required. Change the dowels.

h) Put silicon paste on the heating element (5) and assemble in the reverse order.

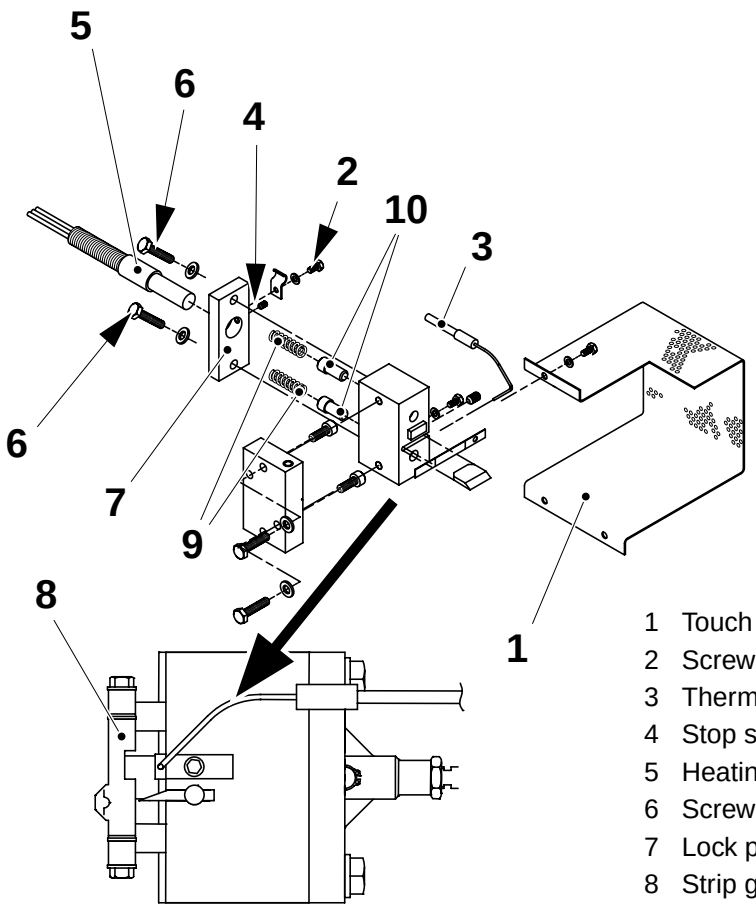

1 Touch guard
2 Screw
3 Thermocouple
4 Stop screw
5 Heating element
6 Screw
7 Lock plate
8 Strip guide
9 Spring
10 Dowel

2.2B3341A01.en

1.5-8 Splicing device - change cylinder

SPC reference	580043-010V

a) Remove the touch guard from the splicing unit.

b) Disconnect the air connections

c) Remove the circlip (1) and push out the pin fixing the head of the cylinder.

d) Remove the spring pin (2) and the cylinder (3).

e) Remove the valves (4) and pipe couplings (5).

f) Remove the bracket (6) and the nut (7) from the cylinder piston.

g) Change the cylinder.

h) Fit the nut (7) and the bracket (6) on the new cylinder.

i) With the piston fully retracted, set distance **A** between the nut (7) and the cylinder (3).

j) Assemble in the reverse order.

k) Check the function of the cylinder; see *1.5-1 Splicing device - check functioning*.

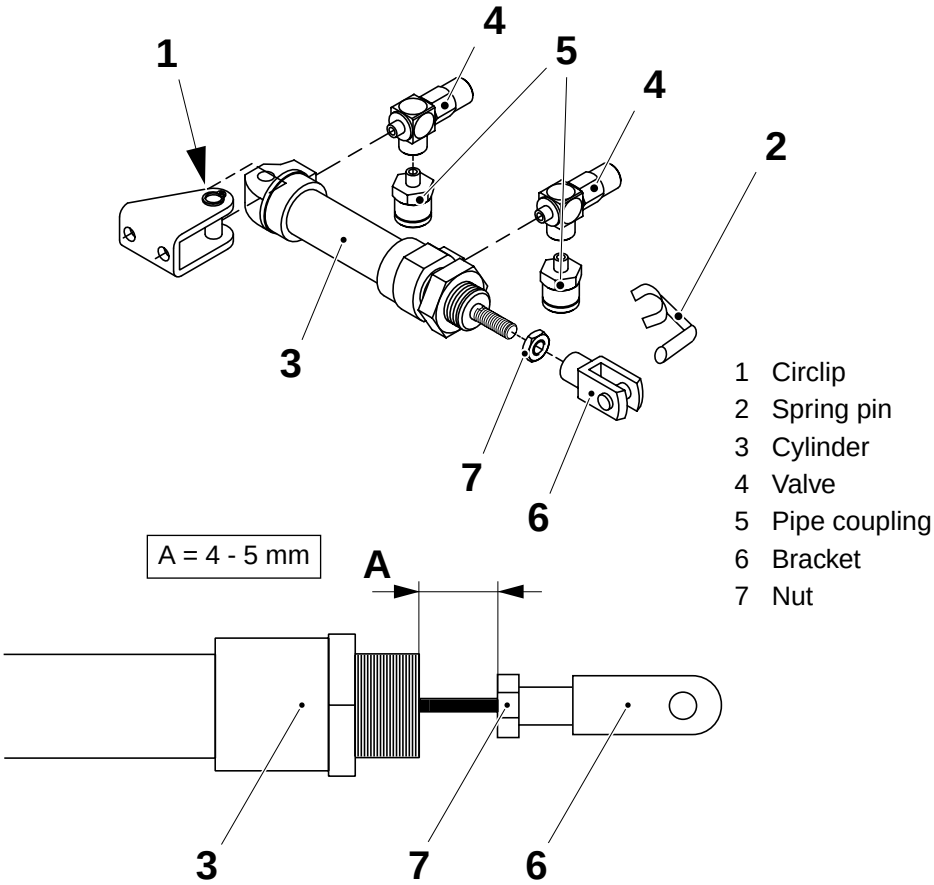

2.2B3341A01.en

1.6 Strip guide (TBA/8, TBA/8 LSC)

SPC reference	1260383-010V

1.6-1 Strip guide (TBA/8, TBA/8 LSC) - check roll

SPC reference	1260383-010V

Check that the roll (arrow) rotates freely. Clean or change the axle pin and/or roll as necessary.

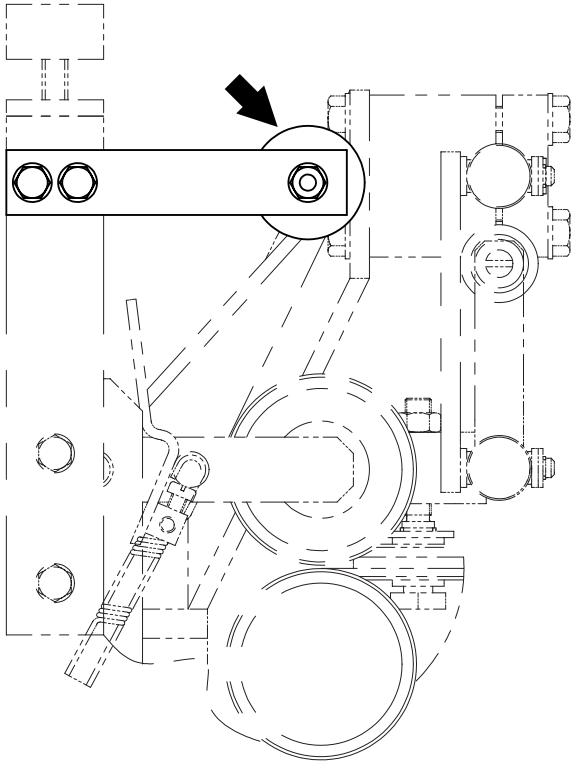

2.2B3341A01.en

1.6-2 Strip guide (TBA/8, TBA/8 LSC) - set roll

SPC reference	1260383-010V

Loosen the lock nuts (1) and shift the axle pin (2) to align the roll (3) with the guide wheel (4) on the strip applicator. Tighten the lock nuts (1) to fix the axle pin in this position.

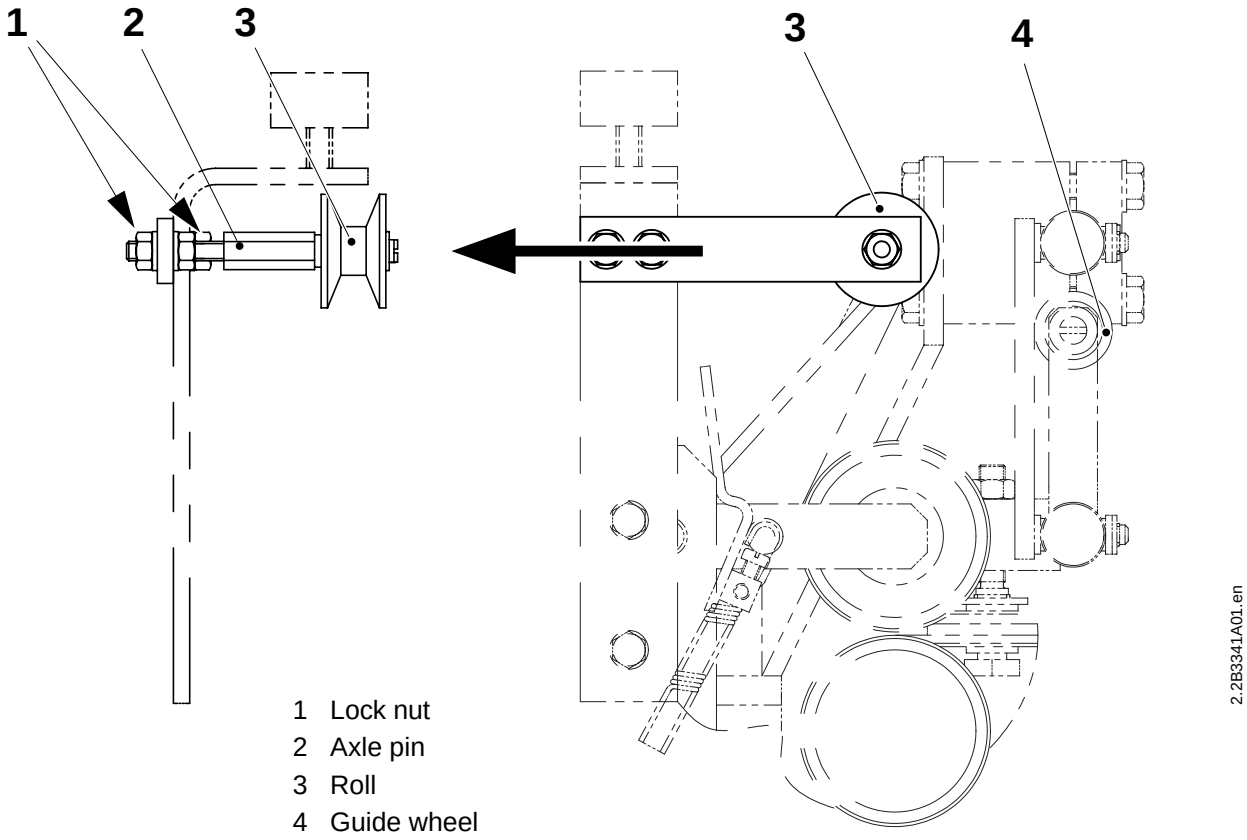

1 Lock nut
2 Axle pin
3 Roll
4 Guide wheel

1.7 Fastening bracket (TBA/9)

SPC reference	1279644-010V

1.7-1 Fastening bracket (TBA/9) - check roll

SPC reference	1279644-010V

Check that the roll (arrow) rotates freely. Clean or change the axle pin and/or roll as necessary.

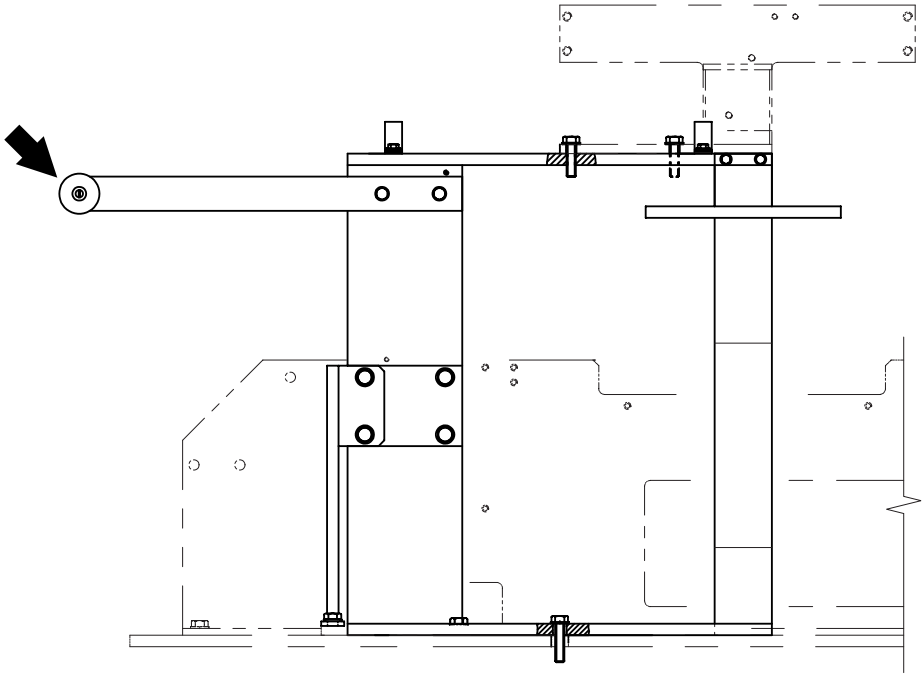

2.2B3341A01.en

1.7-2 Fastening bracket (TBA/9) - set roll

SPC reference	1279644-010V

Loosen the lock nuts (1) and shift the axle pin (2) to align the roll (3) with the guide wheel of the strip applicator. Tighten the lock nuts (1) to fix the axle pin in this position.

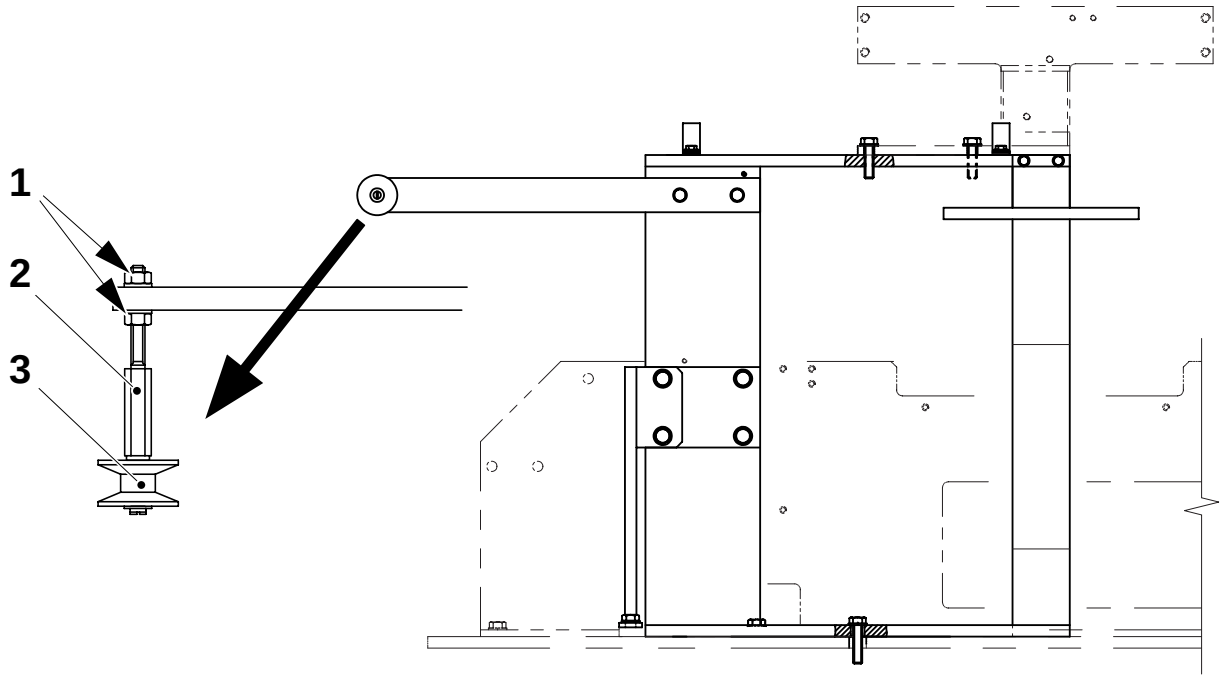

2.2B3341A01.en

1 Lock nut
2 Axle pin
3 Roll

2 Electrical equipment

2.2B3341H00.en

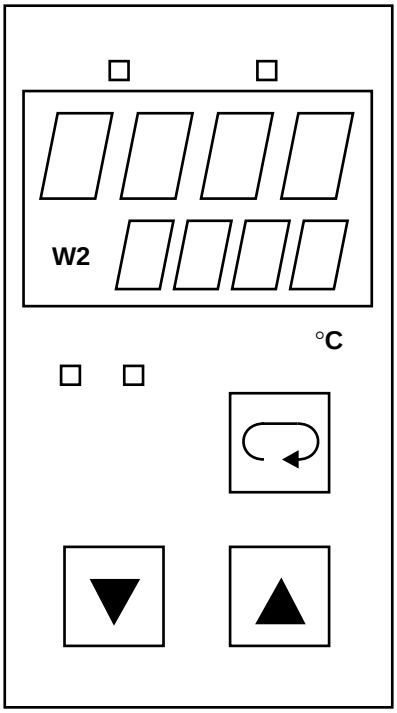

2-1 Electrical equipment - description

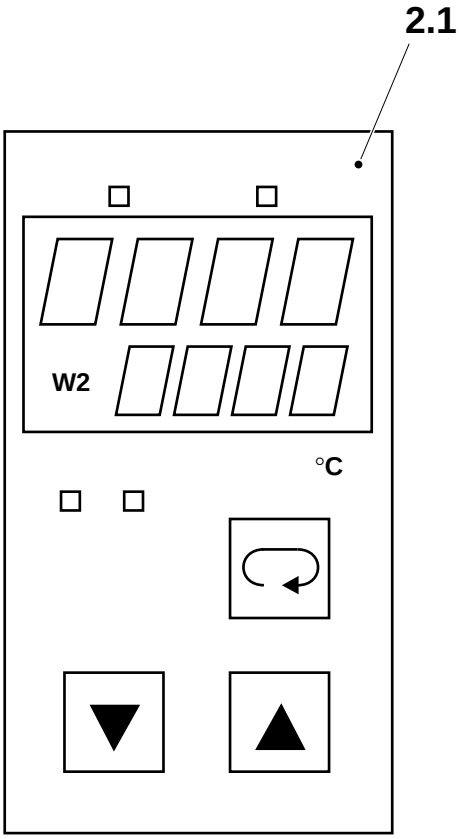

2.1 Temperature regulator

2.2B3341H00.en

2.1 Temperature regulator

2.1-1 Temperature regulator - set

Machine status	Power **On**
SPC reference	90410-51

TBA/8, TBA/8 LSC

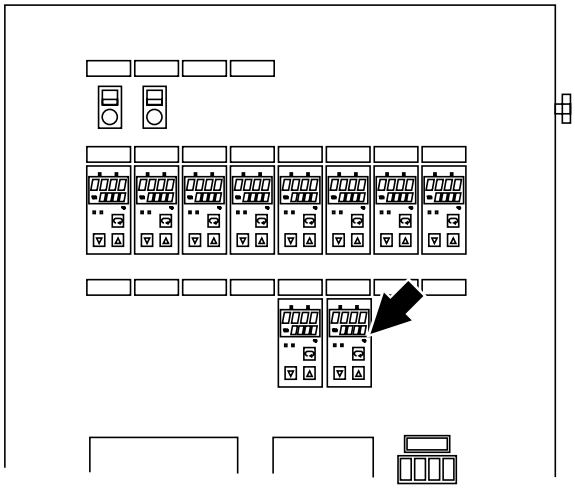

TBA/8

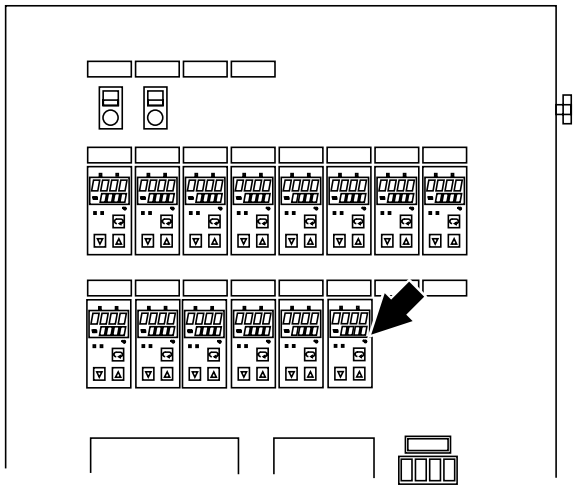

TBA/8 LSC

2.2B3341H01.en

TBA/9

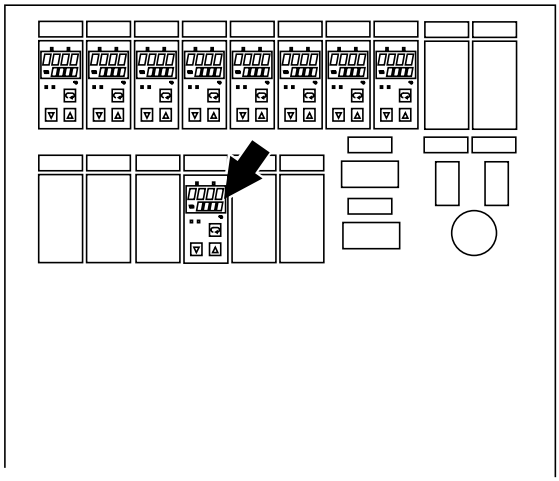

(Cont'd)

(Cont'd)

Note! See the *MM* for the filling machine for the temperature regulator calibration and setting procedures.

Set the values from the table below.

Regulator	Des	W	SP2	PT2	LCL1	LCH1	LCL2	LCH2	HCA	Loc	SPL	SPH	Pb1	t1	td	t1
ASSU/8/9	A910	190	0	0	5	5	-------	-------	------	0	160	220	2.0	10	10	21

Step up to **Preheating 1** and perform a number of manual splices. If the strength of the splicing is not satisfactory, calibrate the temperature regulator and repeat the setting procedure.

2.2B3341H01.en

3 Checklist overview

2.2B3341Z00.en

Checklist overview - description

This section of the MM, **is intended for customers who do NOT use the Tetra Pak Maintenance System (TPMS).** The checklist overview contains all the check points for a specified machine type or equipment which are needed in order to keep the equipment in good condition. The following items can be found in the checklist:

- **MM code** – shows where you can find more information about the activity.
- **Unit/Component** – name of unit or component on which to perform the activity.
- **Activity** – action to be performed.
- **Interval (h)** – how often the activity should be performed in production hours.

Note! The checklist overview in this manual **may differ from the TPMS checklists** delivered by your local service station, due to the fact that TPMS checklists are continuously updated and adapted to local demands.

2.2B3341Z00.en

TPMS - description

The maintenance system used for equipment from Tetra Pak is called the **Tetra Pak Maintenance System (TPMS)**. If you are using TPMS, the checklists will be delivered directly from your local Tetra Pak service station.

The TPMS checklists are designed to match and keep pace with the ongoing development of new and existing equipment from Tetra Pak, and to meet the demands set by our customers for even higher efficiency and better economy.

Some of the advantages of TPMS are:

- TPMS maintains complete production lines.
- TPMS reduces down-time to a minimum each time maintenance is carried out.
- Updates of the maintenance schedule based on experience gained, improvements, modifications and specific customer requirements are issued.
- Recommendations regarding spare parts, rotation units, tools and templates, etc. are included.

The service life of each item in the equipment is predicted and all items are checked before they affect the efficiency of the equipment. This leads to different maintenance intervals for each item and the check list is unique for each maintenance occasion.

The results of the maintenance are sent back to the Tetra Pak service station. Statistics are evaluated regularly, giving a continuously updated maintenance system.

If you require further information regarding TPMS, please do not hesitate to contact your local Tetra Pak office.

2.2B3341Z00.en

Checklist overview

MM code	Unit/Component	Activity	Interval (h)
1.3-1	Strip magazine - Rolls	Check	500
1.4-1	Splicing magazine	Check	500
1.5-1	Splicing device - Functioning	Check	500
1.6-1	Strip guide - Rolls (TBA/8)	Check	500
1.7-1	Fastening bracket - Rolls (TBA/9)	Check	500
1.2-1	Brake arms - Functioning	Check	1000
1.1-1	Hub jumbo	Check	1500

2.2B3341Z00.en

Tetra Pak