*MM binder labels. 40 mm Full width Note! This page is generated **automatically**. using the **variable definitions** made in the **front page** file!!*

Tetra Easy Ride Plus

Issue 2001-11 Doc No. TeM-585832-0101

Tetra Easy Ride Plus

Issue 2001-11 Doc No. TeM-585832-0101

Tetra Easy Ride Plus

Issue 2001-11 Doc No. TeM-585832-0101

Tetra Easy Ride Plus

Issue 2001-11 Doc No. TeM-585832-0101

Tetra Easy Ride Plus

Issue 2001-11 Doc No. TeM-585832-0101

Tetra Easy Ride Plus

Issue 2001-11 Doc No. TeM-585832-0101

Tetra Easy Ride Plus

Issue 2001-11 Doc No. TeM-585832-0101

Tetra Easy Ride Plus

Issue 2001-11 Doc No. TeM-585832-0101

Tetra Easy Ride Plus

Issue 2001-11 Doc No. TeM-585832-0101

Tetra Easy Ride Plus

Issue 2001-11 Doc No. TeM-585832-0101

Tetra Easy Ride Plus

Issue 2001-11 Doc No. TeM-585832-0101

! If the text does not fit; **change the font on "B TitleFull" to min 18 p, and the left indent to 0.5 cm** (**on all three components**). **Make "Update All"**

2.25858320101la

*MM binder labels. 30mm Halfwidth Note! This page is generated **automatically**. using the **variable definitions** made in the **front page** file!!*

Tetra Easy Ride Plus

Issue 2001-11 Doc No. TeM-585832-0101

Tetra Easy Ride Plus

Issue 2001-11 Doc No. TeM-585832-0101

Tetra Easy Ride Plus

Issue 2001-11 Doc No. TeM-585832-0101

Tetra Easy Ride Plus

Issue 2001-11 Doc No. TeM-585832-0101

Tetra Easy Ride Plus

Issue 2001-11 Doc No. TeM-585832-0101

Tetra Easy Ride Plus

Issue 2001-11 Doc No. TeM-585832-0101

Tetra Easy Ride Plus

Issue 2001-11 Doc No. TeM-585832-0101

Tetra Easy Ride Plus

Issue 2001-11 Doc No. TeM-585832-0101

Tetra Easy Ride Plus

Issue 2001-11 Doc No. TeM-585832-0101

Tetra Easy Ride Plus

Issue 2001-11 Doc No. TeM-585832-0101

Tetra Easy Ride Plus

Issue 2001-11 Doc No. TeM-585832-0101

Tetra Easy Ride Plus

Issue 2001-11 Doc No. TeM-585832-0101

Tetra Easy Ride Plus

Issue 2001-11 Doc No. TeM-585832-0101

Tetra Easy Ride Plus

Issue 2001-11 Doc No. TeM-585832-0101

Tetra Easy Ride Plus

Issue 2001-11 Doc No. TeM-585832-0101

Tetra Easy Ride Plus

Issue 2001-11 Doc No. TeM-585832-0101

! If the text does not fit; **change the font on “B TitleHalf” to min 18 p, and the left indent to 0.5 cm (on all three components). Make “Update All”**

2.25858320101la

TeM

Technical Manual

Tetra Easy Ride Plus

B-list No.

.....

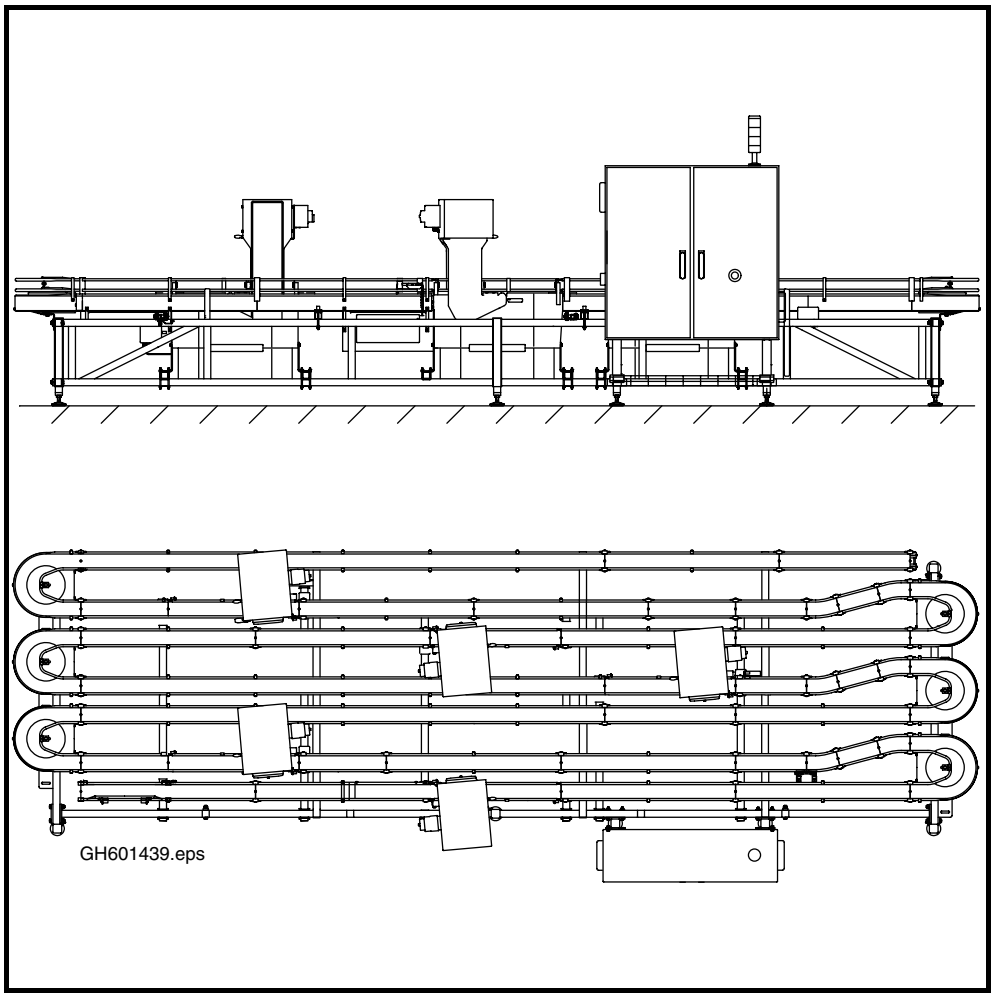

EM1.15858320101.fm

Tetra Pak

Doc No. TeM-585832-0101

Note! This TeM manual is not to be ordered on it´s document number.
See the **Introduction** chapter for more information.

This page intentionally left blank

This document is valid for:

Series No/ Machine No Sign.

TeM
Technical Manual

Machine:
Tetra Easy Ride Plus

EM1.1585832010 1.fm

Introduction 1

Safety precautions 2

Installation instructions 3

Operation instructions 4

Maintenance instructions 5

Electrical documents guide 6

Table of contents for electrical documents 7

Spare parts 8

Component location 9

Circuit diagrams 10

Mains & connection diagrams 11

Program documents 12

Doc No. TeM-585832-0101

Issue 2001-11

Tetra Pak

Tetra Pak Carton Ambient AB

This page intentionally left blank

1 Introduction

Document information 2
Machine introduction 5
Machine identification 6
Machine orientation 7
Abbreviations used in this manual 8
How to use the maintenance manual 9

2 Safety precautions

General 14
Hazard information 14
Warning sign 15
Requirements on personnel 16
Emergency stop 18
Safety system 19
Main switch 20
Safety switch 21
Filter regulator 22
Covers 23
Electrical cabinet 23
Risk areas 24
Chemical products 24
Conveyor chains 24
Safety hatch 25
Noise emission 26
Hearing protection 27
Required equipment for service access 27

3 Installation instructions

3.1 Preparations 30
3.1.1 General 30
3.1.2 Unloading and unpacking the equipment 30
3.2 Installation 31

2.2585832010 1TOC.fm

3.2.1 Installation of electrical cabinet 31
3.2.2 Installation of other equipment 32
3.2.3 General 32
3.2.4 Installation example. 32
3.2.5 Checklist of the installation 35
3.2.6 Introduction 35

3.3 Technical data & drawings 42
3.3.1 Installation drawing 42
3.3.2 Mass / weight 46
3.3.3 Production data 47

3.4 Site preparation 48
3.4.1 General requirements on site 48

3.5 Machine handling 49
3.5.1 Crate handling 49
3.5.2 Storage 50
3.5.3 Inspection 51
3.5.4 Disposal / re-use 51
3.5.5 Machine transport 51

3.6 Position, assembly & connections 52
3.6.1 Space requirements 52
3.6.2 Positioning 52
3.6.3 Levelling 52
3.6.4 Assembly of TPC 21 holders 52
3.6.5 Connections 59

3.7 Preparation for commissioning 60
3.7.1 Start Up Machine Quality Report 60

3.8 Disassembly and removal 62
3.8.1 Preparation 62
3.8.2 Disconnect utilities 62
3.8.3 Disassembly of machine 63
3.8.4 Storage preparation. 63
3.8.5 Moving 63

2.2585832010 1TOC.fm

3.8.6 Re-crating 63
3.8.7 Final disposal 63

4 Operation instructions

4.1 General description 66
4.1.1 Key switches and push buttons 66
4.1.2 Functional description 67
4.2 Control panel/Alarms 70
4.2.1 Warning and indication lamp 71
4.3 Preparations 72
4.3.1 Main switch 72
4.3.2 Emergency stop 72
4.3.3 Doors 73
4.3.4 Lamps 73
4.3.5 Step up 74
4.3.6 Alarms 74
4.4 Start 76
4.4.1 Production 76
4.5 Stop 77
4.5.1 Emergency stop 77
4.5.2 Normal stop 78

5 Maintenance instructions

5.1 Adoption of the control system for the conveyor installation 80
5.1.1 General 80
5.2 Mechanical equipment 90
5.2.1 Glide Curves 90
5.2.1-1 Glide curves - check 90
5.2.1-2 Glide curves - replace parts 90
5.2.2 Wheel Curves 91

2.2585832010 1TOC.fm

5.2.2-1 Wheel curves - lubrication 91
5.2.2-2 Wheel curves - check 91
5.2.2-3 Wheel curves - replace parts 92
5.2.4 Drive and End Unit. 93
5.2.4-1 Cleaning 93
5.2.4-2 Check 94
5.2.4-3 Change of oil 100
5.2.4-4 Replace parts 100

5.3 Electrical equipment 105

5.3.1 GE Fanuc 105
5.3.1-1 GE Fanuc - change battery 105
5.3.1-2 GE Fanuc - change Input / Output module 107
5.3.1-3 Check equipment identity numbers 108
5.3.1-4 GE Fanuc - change terminal 110
5.3.2 Frequency inverters. 111
5.3.2-1 Frequency converter - description. 111
5.3.2-2 Frequency converter - set 114
5.3.2-3 Frequency converter - fault codes 118
5.3.2-4 Frequency converter - change 121
5.3.3 Electrical components 122
5.3.3-1 Electrical components - set photocell 122

6 Electrical documents guide

6.1 Electrical documents guide 126

General 126
Sub chapter orientation. 126
Drawing identification 129
Numbering system for components 130
How to trace a cable 132
How to trace a component 137
Supply/line voltage 141
How to trace a terminal 143

2.2585832010 1TOC.fm

7 Table of contents for electrical documents

About this chapter 148

8 Spare parts

. 150

9 Component location

. 152

10 Circuit diagrams

. 154

11 Mains & connection diagrams

. 156

12 Program documents

. 158

2.2585832010 1TOC.fm

This page intentionally left blank

2.2585832010 1TOC.fm

1 Introduction

DANGER!

Immediate danger to life!
To ensure maximum safety, always read the Safety precautions before doing any work on the machine or making any adjustments.

2.2TH601356en.fm

Document information

About this Technical Manual (TeM)

The purpose of this Technical Manual is to provide operators, contact personnel, service technicians, and electricians with information on the **equipment required for operation, service and maintenance**.

The Technical Manual (TeM) consists of the following chapters:

- Introduction
- Safety precautions
- Installation instructions
- Operation instructions
- Maintenance instructions
- Electrical documents

The purpose of the introduction is to provide the user of the manual with general information about the manual as well as the equipment.

The purpose of the safety precautions is to provide the user of the manual with information so it is safe to operate and maintain the equipment.

The purpose of the installation instructions is to provide the service technicians with information on the on-site installation process.

The purpose of the operation instructions is to provide the operator with information on how to handle and operate the machine before, during, and after the production.

The purpose of the maintenance instructions is to provide service technicians and electricians with information on the equipment required for service and maintenance.

The purpose of the electrical manual chapters, is to provide service technicians and electricians with all information on the electrical equipment required for service and maintenance.

Note! All the illustrations in this Technical Manual (TeM) are composed only to demonstrate and are not accurate for the equipment this TeM handles. For information concerning your equipment, like type of electrical cabinet etc. see the beginning of the **Component Location** chapter.

2.2TH601356en.fm

(Cont'd)

Delivered documentation

The technical documentation delivered with this machine is stated in the delivered design which is to be found as a plastic laminated copy in the electrical cabinet.

If any document is missing, it must be reported in the document **Start Up Machine Quality Report**. For more information, read the Installation Manual.

It is important that you keep these documents for the life of the equipment, and pass the documents on to any subsequent holder or user of the equipment.

Design modifications

The directives in this document are in accordance with the design and construction of the machine at the time it was released by a Tetra Pak machine production facility.

Document producer

This document has been produced by:

Tetra Pak Carton Ambient AB
Ruben Rausings gata
221 86 Lund
Sweden

Additional copies

Additional copies can be ordered from nearest Tetra Pak office.

Note! This type[1] of TeM manual is not to be ordered on it´s document number. It is included in the electrical documents. To order this TeM manual, please quote the "**Electrical Document list number"** regarding this specific installation and wanted language version on the manual.
For more information, please contact:

Conveyor & Accumulation
Tetra Pak Carton Ambient AB.

1. This type of manual always have a "note-text" under the document number on the front page that refers to this chapter.

For other type of manuals always quote the **document number** printed on the front cover of the document concerned.

2.2TH601356en.fm

1

Number of pages

This document contains a total of 160 pages.

Note! The electrical documents[2] are not included in these 160 pages.

To make sure that you have received a complete manual, please check that the contents in the chapters 8 - 12 matches the table of contents (Electrical document) in chapter 7 (Table of contents for electrical documents).
Also check that the document number (see the big arrow in the example below) at the last position of the list “Electrical document” matches the document number you find at the bottom on this page.

The first two numbers in the suffix number (see the small arrow in the example below) of the document number may alter because of different language versions on the manual part.

2. The electrical documents consists of **Spare part-lists**, **Mounting drawings**, **Circuit diagrams**, **Connection diagrams, Mains connection diagrams**, and **PLC-program**. See Sub chapter orientation on page 126 for more information.

```
Tetra Pak        MSTK  BoM Explosion (BoM Book)                    Plant: PDM1
Created on 2000.10.16                ELECTRICAL DOCUMENT                    1370659-0101
-----------------------------------------------------------------------------------------
ChgPosition  S   S        Description         A Si  Identity    DTp Prt Vs Un   Column quan
             p   H                            s ze                            it   All
-----------------------------------------------------------------------------------------
I  2001                Technical Manual         A4 1364159-0102            PC    1
I  2010                                                                           1
                       I t e m    t e x t
                       NOTE!
                       DIFFERENT LANGUAGE VERSIONS OF THIS TEM
                       MANUAL CAN BE VALID.
                       THE FIRST TWO NUMBERS IN THE SUFFIX
                       NUMBER INDICATE LANGUAGE VERSION (SEE
                       XX IN EXAMPLE BELOW).
                       THESE NUMBERS ARE ALLOWED TO ALTER WHEN
                       PICKING THE TEM MANUAL.
                       .
                       EXAMPLE: DOC NO. TEM 1234567-XX02
```

GH500562.tif

Example of document number on the “Electrical document” list

2.2TH601356en.fm

Copyright © 2001
Tetra Pak Carton Ambient AB
All rights reserved. No part of this document may be reproduced or copied in any form or by any means without the written permission of Tetra Pak Carton Ambient AB.

Machine introduction

Intended use of this Tetra Pak equipment

Tetra Easy Ride Plus is used to control the flow of packages between filling machines and distribution equipment to get maximum efficiency and optimal accumulation on each production line. It is also used to obtain careful handling of the packages.

Service

In case of problems when operating the machine, contact the nearest Tetra Pak service station.

Manufacturer

This Tetra Pak equipment was produced by:

Tetra Pak Carton Ambient AB
Ruben Rausings gata
221 86 Lund
Sweden

2.2TH601356en.fm

Machine identification

There are two different equipment signs available for this kind of units. The two equipment signs are illustrated below. They carries data needed when contacting Tetra Pak concerning the particular unit.

Units without drive motors

Units without drive motors are attached with this equipment sign.

1 Year of manufacture
2 Article number

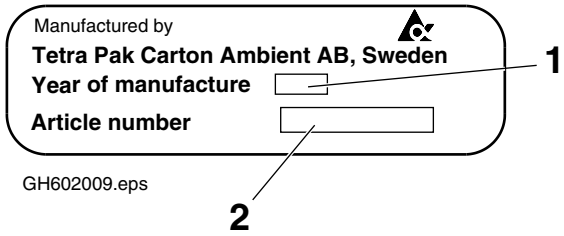

Units with drive motors

Units with drive motors are attached with this equipment sign. The equipment sign is marked with a CE symbol. It means that the unit complies with the **essential health and safety requirements of the European Economic Area (EEA)**.

1 Machine type
2 Drawing specification
3 Manufacturer
4 Year of manufacture

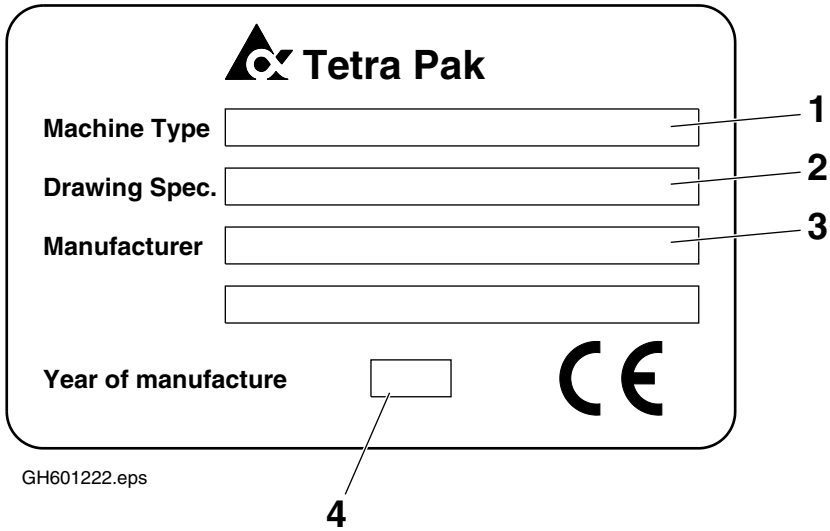

2.2TH601356en.fm

Machine orientation

Definition of direction

The below illustration shows the machine from above.

A indicates the **Rear** of the machine.

B indicates the **Front** of the machine.

C indicates the **Left** of the machine.

D indicates the **Right** of the machine.

E indicates the **Infeed** of the machine.

F indicates the **Discharge** of the machine.

Note! The arrows indicate the flow direction in the machine.

Right infeed

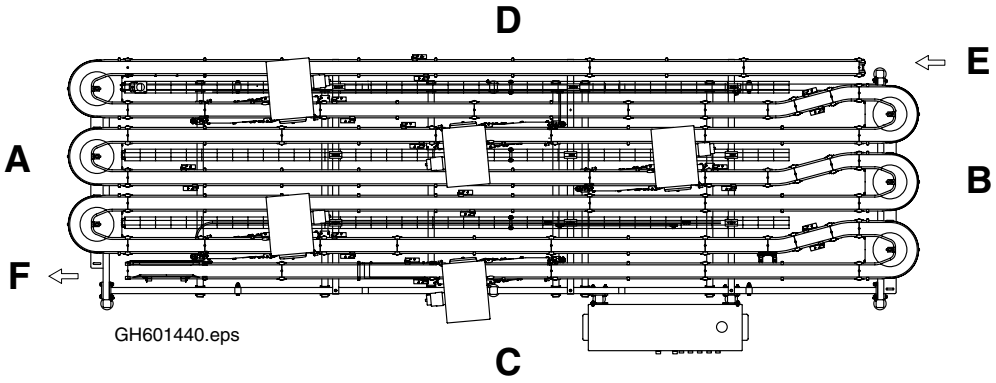

Left infeed

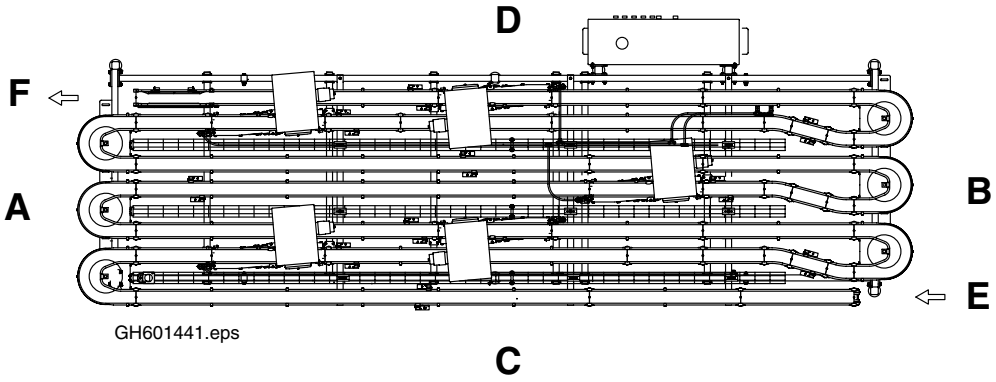

2.2TH601356en.fm

Abbreviations used in this manual

Abbreviation	English name	Translated
CE	Communautés Européennes / European Communities	
EEA	European Economic Area	
EM	Electrical Manual	
IM	Installation Manual	
I/O	Input / Output (module)	
LED	Light Emitting Diode	
LH	Left Hand	
OM	Operation Manual	
RH	Right Hand	
SPC	Spare Parts Catalogue	
TeM	Technical Manual	
TPMS	Tetra Pak Maintenance System	

2.2TH601356en.fm

How to use the maintenance manual

Page layout

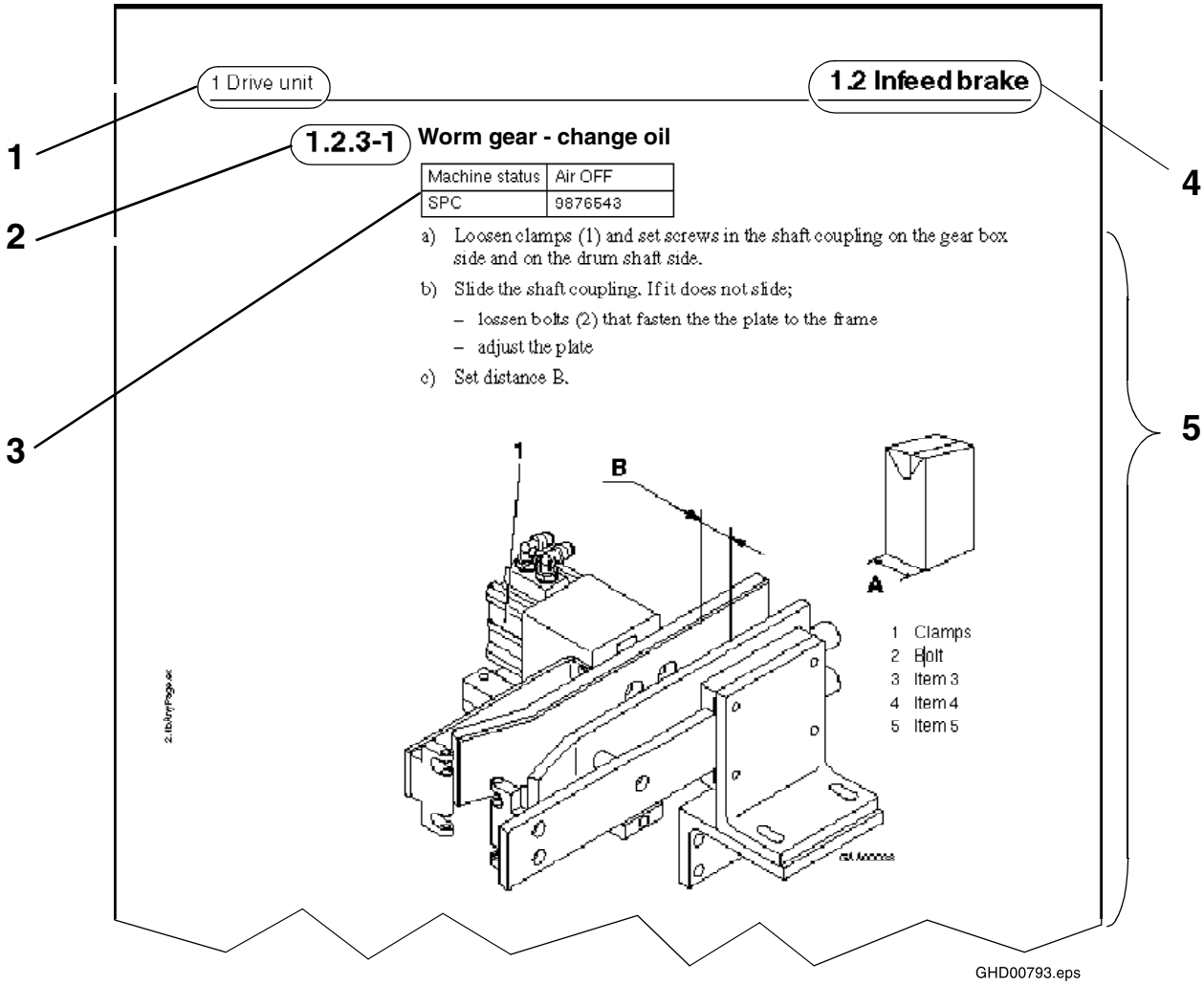

1 MM chapter name
2 MM procedure code (see page 10)
3 Additional information (see page 11)
4 MM section
5 MM procedure

(Cont'd)

1

(Cont'd)

MM procedure codes

The maintenance procedures are indicated as shown by the example below:

1.2.3-1 Worm gear - change oil

MM chapter or Main machine

MM section or Machine group

MM sub section or Machine subgroup

Consecutive procedure number

Sub section name

Clarification of activity

Type of activity. See below.

Types of standard activities:	
– Adjust	– Lubricate
– Assemble	– Install
– Bleed	– Measure
– Calibrate	– Overhaul
– Change	– Record
– Charge	– Remove
– Check	– Set
– Clean	– Synchronise
– Count	– Tighten
– Delime	– Turn
– Dismantle	and
– Empty	– Description
– Fill	– Diagram

2.2TH601356en.fm

(Cont'd)

(Cont'd)

Additional information

The following additional information is included in each MM procedure as applicable.

1.2.3-1 Worm gear - change oil

Machine status	Main power OFF
Consumables	1 l High pressure oil
Special tools	Template 123456-1
SPC	123456-0101

Machine status
Machine status during the procedure. Usually "Main power OFF".

Consumables
Consumables are items which are needed in addition to replacement parts.

SPC
Reference to the Spare Parts Catalogue (SPC). The number is to be found in the SPC index.

Special tools
Tools needed, that are NOT normally carried by a service technician (for example a template needed in a setting procedure).

2.2TH601356en.fm

This page intentionally left blank

2.2TH601356en.fm

2 Safety precautions

2

2.2TH601357en.fm

General

DANGER!

Incorrect use of the equipment will put your life in danger!
Tetra Pak will take no responsibility for any fatal accidents, injuries to personnel or damage to the machine if the Tetra Easy Ride Plus or associated equipment is installed, operated or serviced without following the instructions in this Technical Manual (TeM).

DANGER!

Risk of immediate danger to life!
Never run the machine if any safety components included in the safety system is non-operational. Non-operational safety components must be changed immediately.

Hazard information

Hazard information in this document has the following significance:

DANGER!	**Immediate danger to life!** Failure to observe this information will put **your life in danger**!
WARNING!	**Risk of serious personal injury!** Failure to observe this information could result in **serious personal injury**!
Caution!	**Risk of minor personal injury!** Failure to observe this information may result in **minor personal injury**!
Important!	**Risk of damage to equipment!** Failure to observe this information could result in **damage to equipment**!

Note! Is used to emphasize important information. A **Note** is not to be regarded as hazard information.

2.2TH601357en.fm

Warning sign

DANGER!

Risk of electrical shock!
Failure to observe will put your life in danger.

Enclosures which do not clearly show that they contain electrical devices are marked with the warning sign below.

GH100784.eps

Location of warning sign

In the figure below shows the warning sign which is attached to the machine.

If the sign is missing, worn out or damaged, a new sign must be ordered.

When ordering, please refer to the following SPC-number: 90194-0016

2.2TH601357en.fm

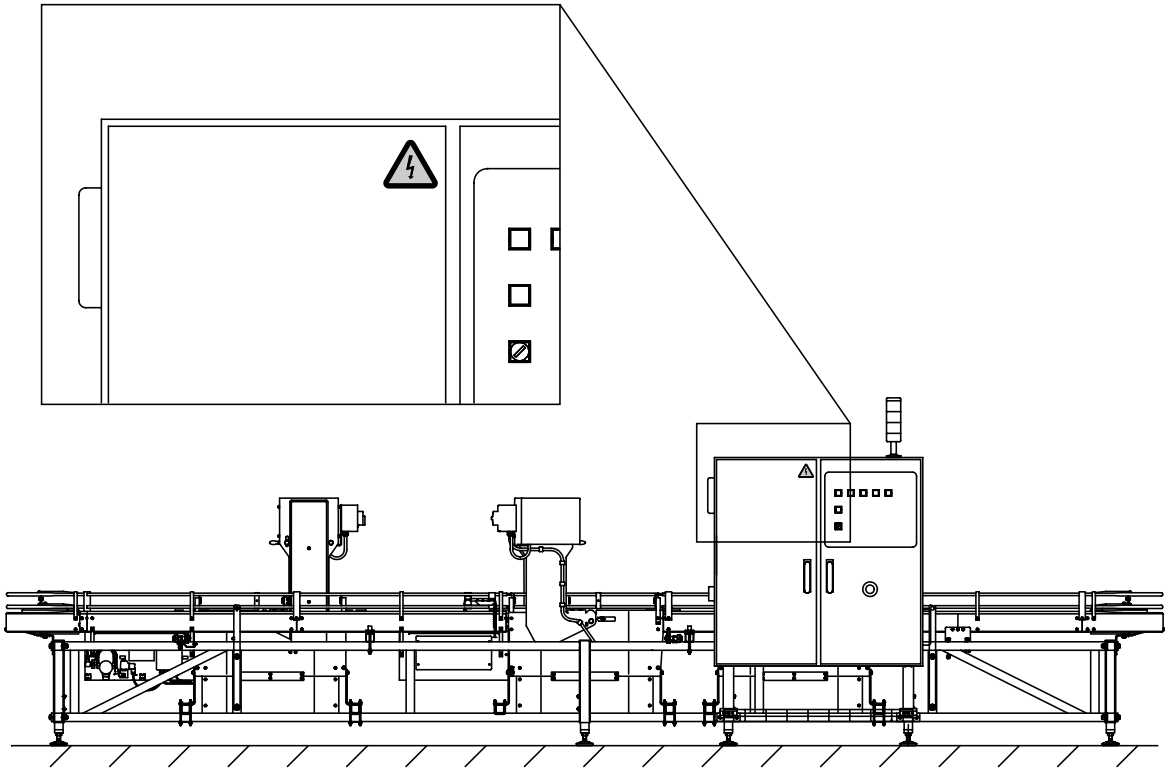

GH601442.eps

Requirements on personnel

DANGER!

Risk of immediate danger to life!
Not following the Safety precautions will put your life in danger.
All personnel must regard all electrical equipment as live.

The work is to be carried out in such a way that there will be no risk of personnel injury.

General

During maintenance or service work, the service technician and the electrician are responsible not only for the equipment, but also for the personnel in the vicinity of the equipment as well!

It is also the responsibility of the service technician and the electrician to assure that the equipment safety devices are fully operational before he/she finishes the maintenance or service work.

Service technician

Only trained or instructed service technicians are allowed to work on the equipment.

Service technicians may be:

- technicians employed by **Tetra Pak**

  The Tetra Pak technicians are Tetra Pak employees who have gone through training courses at the Tetra Pak Technical Training Centers or have an equivalent knowledge.
- technicians employed by the **customer**

  Technicians employed by the customer must have the following skills:
  - capable of reading (English or native) technical information
  - understand technical drawings
  - basic knowledge of mechanics and electronics
  - basic knowledge of mathematics
  - capable of handling (special) tools

Electrician

Electricians should:

- be certified according to local regulations
- have experience of similar types of installations
- have proven skills in reading and working from drawings and cable lists
- have knowledge of local safety regulations for power and automation

Work with the electrical equipment on the equipment must be performed by **skilled persons only.**

2.2TH601357en.fm

According to EN 60204-1:1992 clause 3.55 a skilled person is:

– *An individual with technical knowledge or sufficient experience to enable that individual to avoid hazards which electricity can create.*

The use of a key or tool to carry out work by skilled persons for which it may not be suitable to disconnect the equipment. The supply disconnecting mains may be operated as needed while the door is open.

Examples of such operations are:

- resetting of protective devices
- adjustment of device settings
- fault finding and diagnostic testing

Machine operator

Only trained or instructed persons are allowed to operate the equipment.

The machine operator is an individual that has enough training and/or knowledge to run the equipment in the correct way.

Fork lift driver

Fork lift driver should be certified according to local regulations.

The fork lift driver´s role during installation is:

- to unload transport vehicle
- to plan and transport the machine or machine parts within the plant in a safe and smooth way
- to assist when assembling Tetra Pak Distribution equipment

Emergency stop

In case of danger to people or risk of damage to the machine, one of the two **Emergency stop** buttons must immediately be pushed.

In order to stop the machine immediately in an emergency situation, you must know the exact location of the Emergency stop buttons.

Emergency stop must only be used in case of danger to people or machine. To stop production in the normal way, see the **Stop** section in the Operation Manual (OM).

Note! Emergency stops do not disconnect the electrical supply to the machine.

WARNING! **Risk of crushing injuries!**
Emergency stop on the machine does **not** stop the conveyors running at the outfeed of the filling machine and the infeed of the distribution machine.

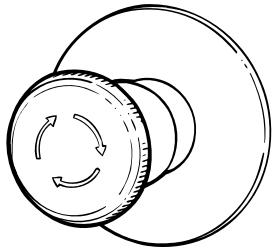

GH100876.eps

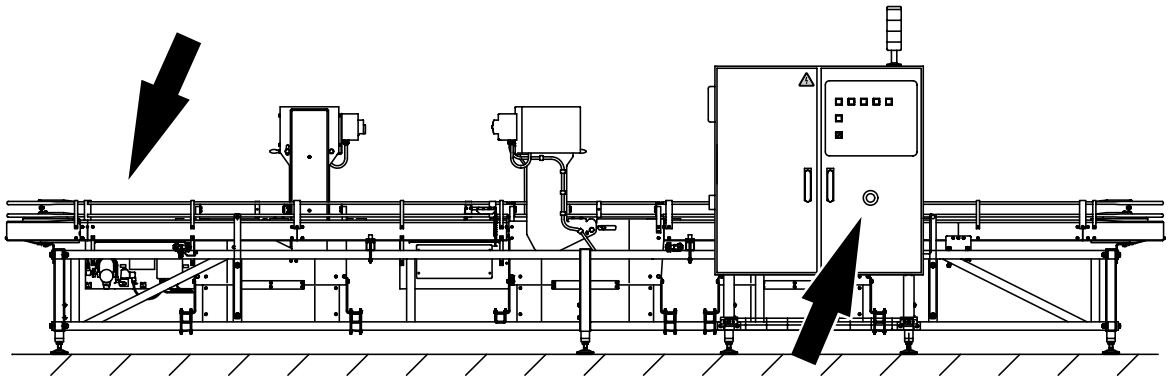

GH601443.eps

2.2TH601357en.fm

Safety system

S099	EMERGENCY STOP BUTTON ON ELECTRICAL CABINET
M.S101-M.S102	EMERGENCY STOP BUTTON EXTERNAL (other emergency stop equipment)

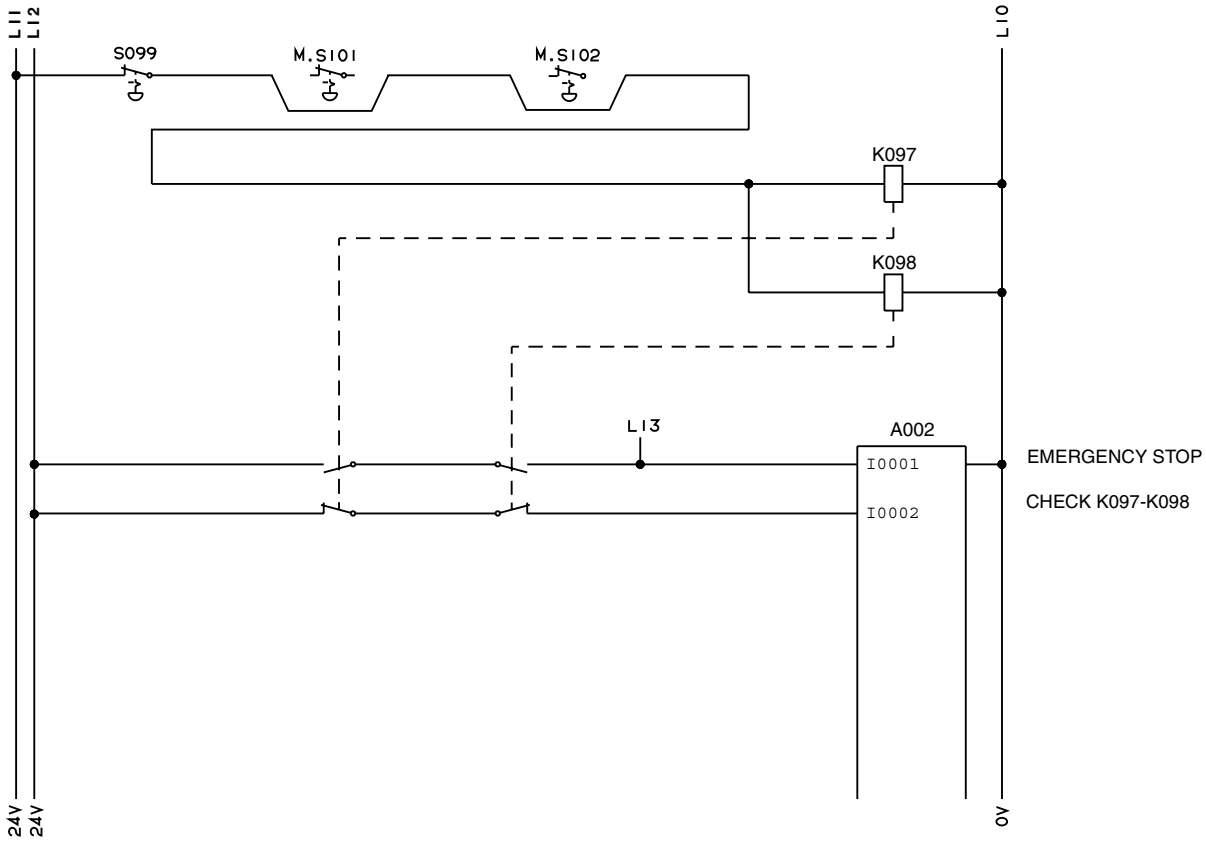

GH500508.eps

2.2TH601357en.fm

Main switch

DANGER! **Risk of electrical shock! Before any service work is carried out the Main switch must be turned OFF and locked with a padlock. The key to the padlock must be removed by the service technician or the electrician and retained in his/her possession until all work is completed.**

2

Examples of such service works are:

- disconnection of electrical cables
- replacement of motors, etc.
- service work in electrical cabinet, connection boxes, etc.
- dismantling of parts in order to prohibit involuntary starts
- service work in machine sections not visible from the control panel

However, for settings of photocells, proximity switches, frequency converters, etc., power is needed. In the MM pages for those settings the status is Power ON: Stop the machine in the correct way. Open a safety switched door and then carry out the settings.

Note! Check that the safety system is properly working.

WARNING! **Do not by-pass the safety system and carry out any settings while the machine is in Production mode.**

2.2TH601357en.fm

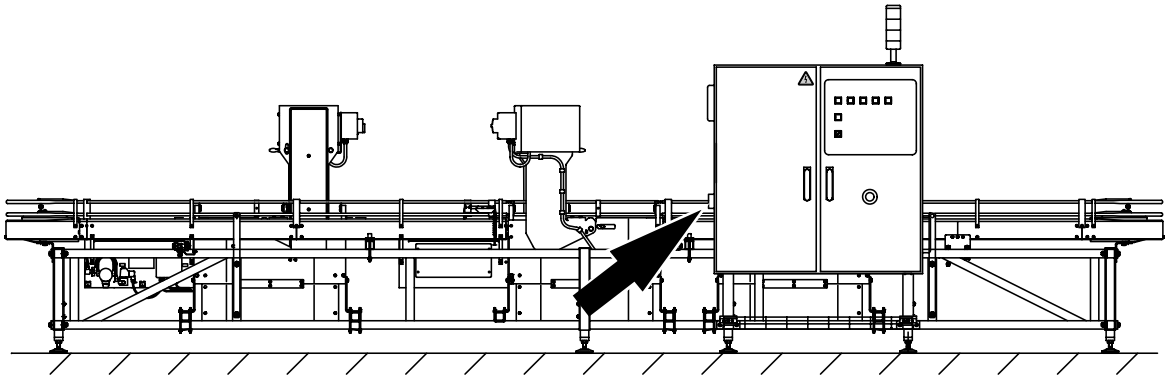

GH601444.eps

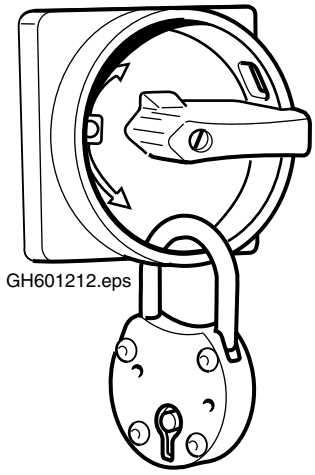

GH601212.eps

Safety switch

WARNING! **Risk of injuries caused by crushing!**
Before any service work is carried out on a conveyor, the **Safety switch** for the actual conveyor section must be turned OFF and locked in this position. The key to the padlock must be removed by the service technician and retained in his/her possession until all work is completed.

Note! The cable and the **Safety switch** itself will still be energized.

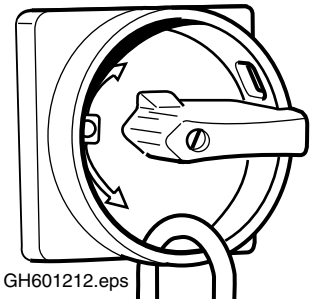
GH601212.eps

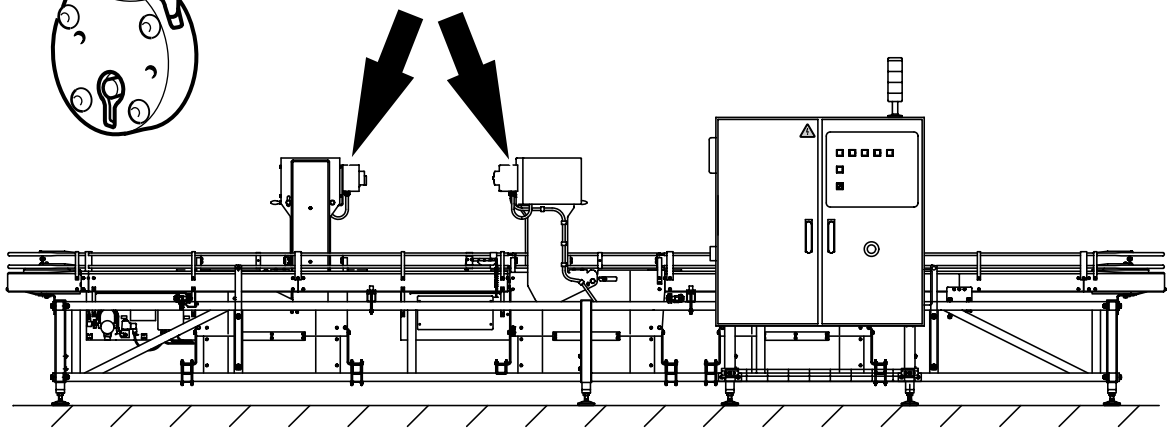
GH601479.eps

2.2TH601357en.fm

Filter regulator

Shut-off valve

WARNING! **Risk of personal injury!**
Before starting service work, make sure that the machine is **not** pressurized. The **Shut-off valve** (2) must be turned OFF and locked with a padlock. It is turned OFF when the regulator handle (1) is pressed down and visible at the underside of the shut-off valve (2).

The key to the padlock must be removed by the service technician or the electrician and retained in his/her possession until all work is completed.

Note! In the picture below the **Shut-off** valve (2) is turned OFF.

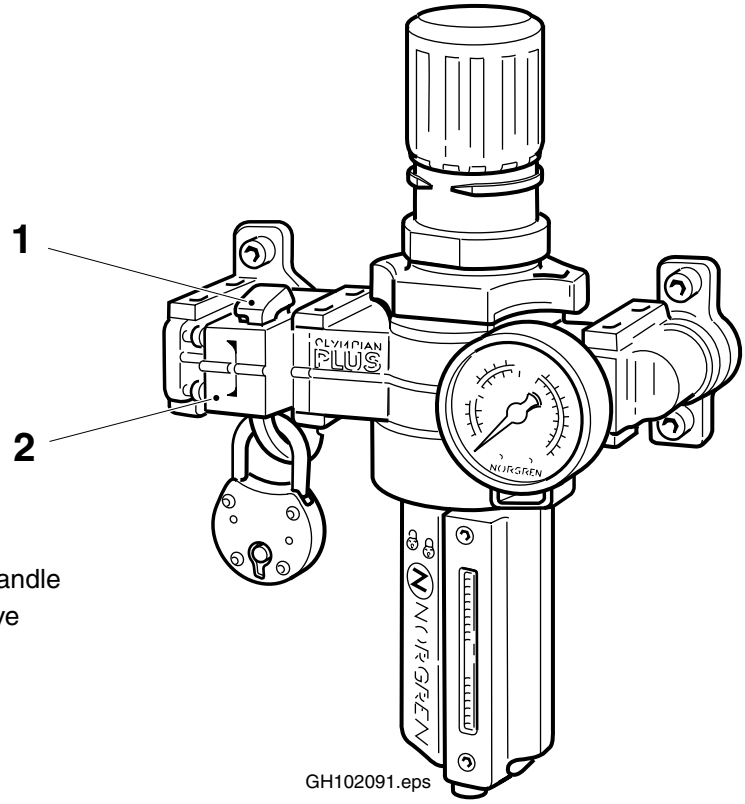

1 Regulator handle
2 Shut-off valve

2.2TH601357en.fm

Covers

WARNING! **Moving parts could cause serious injuries!**
Never run the machine if any safety switch is non-operational or any cover is not fitted.

All covers are screwed on to the machine.

Note! After maintenance, check that all covers are fitted to the machine before it is run.

Electrical cabinet

DANGER! **Risk of electrical shock!**
The voltage is 400V inside the electrical cabinet. Risk of immediate danger to life through electrical shock. In case of accident, immediately call for medical attention.

After the **Main switch** has been turned OFF, there still can remain high voltage in the electrical cabinet. Discharge time approximately five minutes.

Work inside the electrical cabinet must be performed by skilled or instructed persons only.

2.2TH601357en.fm

DANGER! **Risk of electrical shock!**
Always make sure that the electrical cabinet door is locked after performing any type of work in the electrical cabinet.

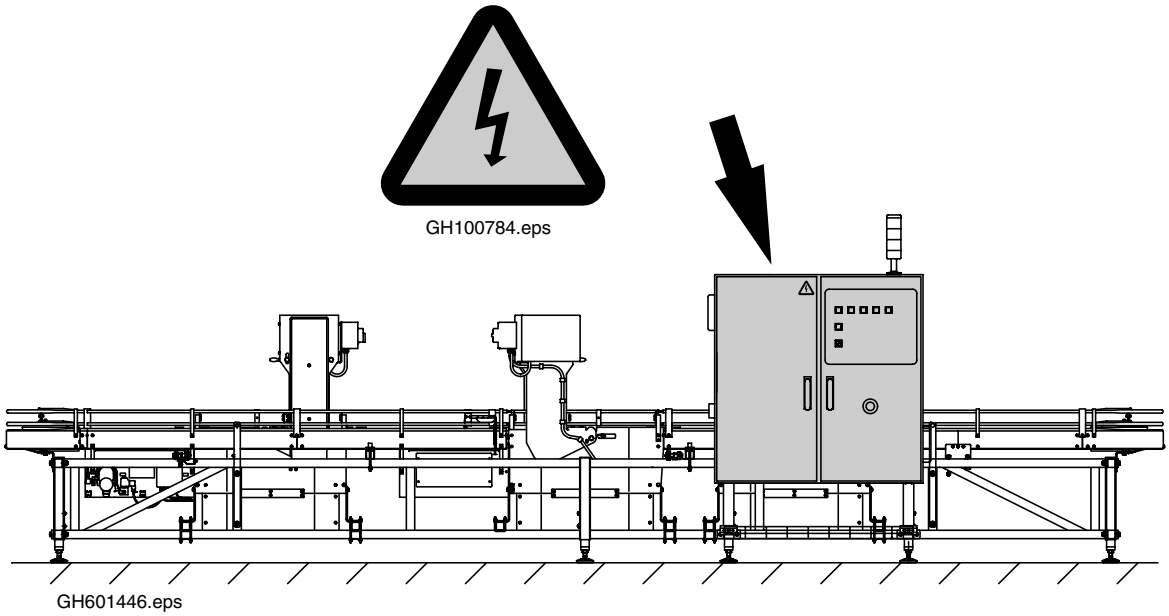

Risk areas

WARNING! **Risk of injuries caused by crushing!**
The system contains running conveyor chains. Do not reach into the machine when the machine is running. Reaching into the machine from the side, top, or below could cause serious injury through crushing.

Only authorized personnel should be allowed in the vicinity of the machine.

Chemical products

WARNING! **Risk of personal injury!**
Can be flammable or hazardous to health. Read the warnings on the container labels!

When handling hydraulic oil, lubricants, and cleaning solutions, carefully follow the warnings on the container labels.

Always use safety equipment according to the instructions on the container labels. Always use gloves and safety glasses when handling chemical products.

For final handling of solutions, follow the instructions from the supplier.

2.2TH601357en.fm

Conveyor chains

WARNING! **Risk of entanglement!**
The system contains running conveyor chains.

Due to the risk of entanglement it is of most importance that the personnel handling the equipment do not wear any clothing like ties or scarfs or any similar items.

WARNING! **Risk of injuries caused by crushing!**
The system contains running conveyor chains.
The conveyor chains are automatically started when packages are produced in the filling machines.

Safety hatch

WARNING! **Risk of personal injuries!**
When tilting the motor unit make sure that the hatch is in correct position before doing any service work.

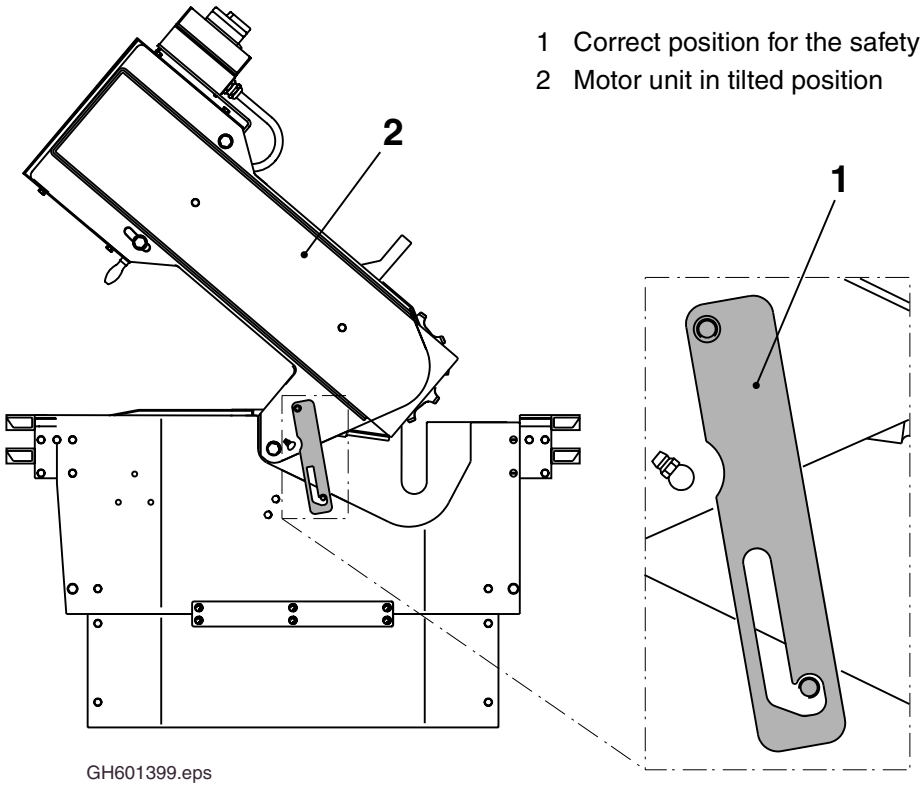

Noise emission

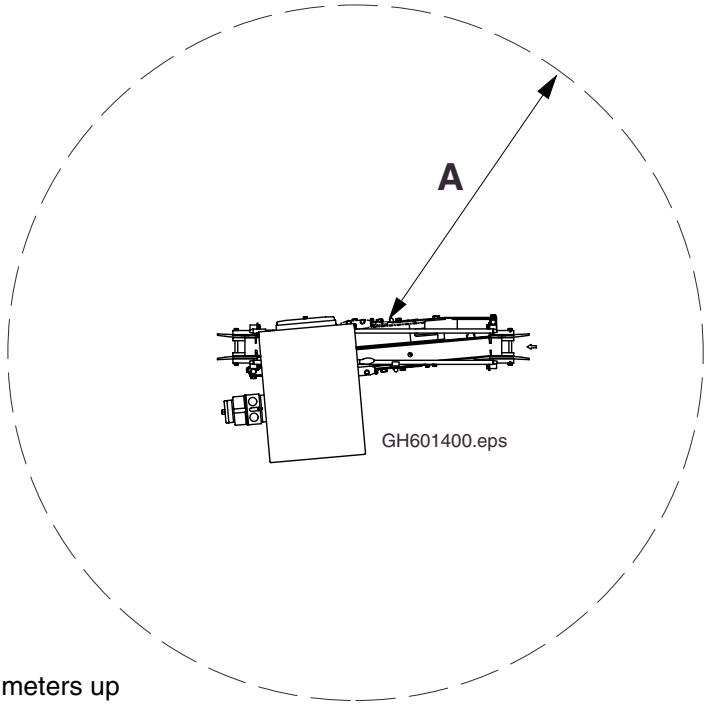

A = 1 meter.
Microphone placed 1.6 meters up

Data

Document	DE-99/216
Date	990216
Machine No	A-672553-2100, 661721-0200
Draw. spec.	C-1359136-0300
Mech. ECN	94486

Noise level according to ISO 11201

Noise source: motor driven conveyor chain

Conveyor speed	Noise level dB(A) Production	Noise level dB(A) Production, no packages
15 m/min	68	68
20 m/min	70	70
25 m/min	72	72
30 m/min	73	73
35 m/min	73	73
40 m/min	77	77
45 m/min	76	76

Background noise 55dB(A) Leq

2.2TH601357en.fm

Hearing protection

Sound Pressure between 70 dB - 85 dB

Caution! Risk of impaired hearing! Hearing protection is recommended.

It is recommended to wear hearing protection while the equipment is running.

Note! Always keep the hearing protection clean.

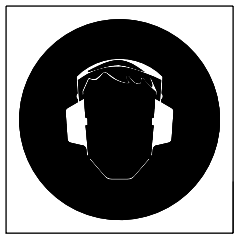

GH100855.eps

Required equipment for service access

WARNING! Risk of personal injuries!

When entering the conveyors during service work, use a wooden board to step on.

1 Wooden board

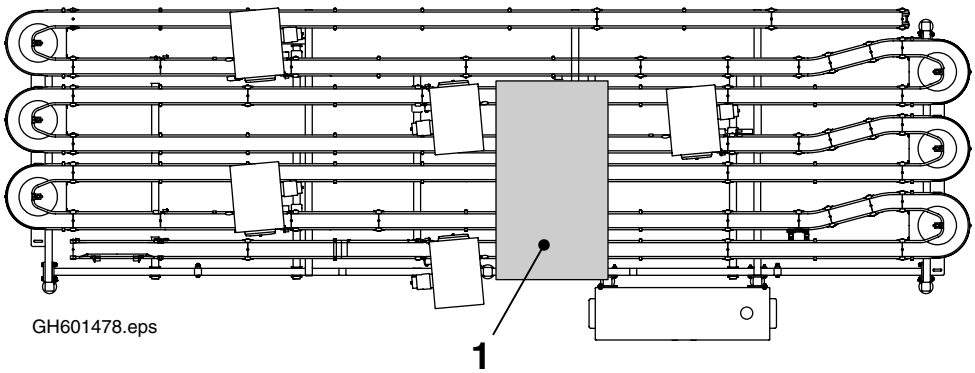

GH601478.eps

2.2TH601357en.fm

This page intentionally left blank

3 Installation instructions

3

2.2TH601358en.fm

3.1 Preparations

3.1.1 General

Before starting the installation of the Tetra Easy Ride Plus, all the conveyors should be installed mechanically. You will find instructions to do this in the TeM (Installation chapter) enclosed with the conveyor equipment.

Note! This installation chapter only handles the installation of the Tetra Easy Ride Plus equipment.

IMPORTANT! It is important that the installation drawing is followed during the installation. Small differences from the layout on the installation drawing may have big effect on the performance of the Tetra Easy Ride Plus.

3.1.2 Unloading and unpacking the equipment

Crate handling

The forks on the fork lift should be put as wide as possible when unloading the crate.

IMPORTANT! Risk of damage to equipment!
Handle the crate with care when unloading it.

2.2TH601358en.fm

3.2 Installation

3.2.1 Installation of electrical cabinet

The door on the electrical cabinet should be able to open (also during production) and leave enough space ($L_1 \geq 700$ mm) to a wall or any other similar item nearby the electrical cabinet (see the figure below).

Note! If there is a walking way in front of the electrical cabinet the space should be ($L_1 \geq 1000$ mm).

$L_1 \geq 700$ mm/1000 mm

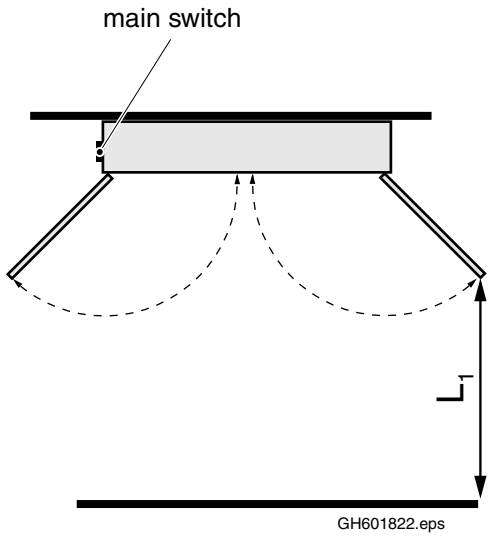

Required space around the electrical cabinet

Lamp

Mount the lamp colors as illustrated below

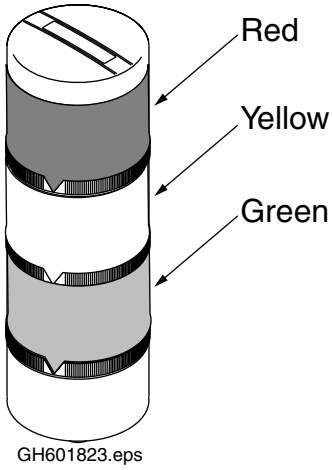

2.2TH601358en.fm

3.2.2 Installation of other equipment

3.2.3 General

Note! All of the following descriptions are made in the package way trough the installation, that is from filling machine to distributions machines.

Things to think of when assemble the safety switches

- Even though the safety switches are protected against water jets (IP65) they should be kept dry and apart from conveyor lubrication and other liquids. Avoid flushing water or any other liquid on the safety switches when cleaning the equipment.

Assemble the gate indicator (option)

When a switch of the type “1-2” is used it should be assembled with a gate indicator. The gate indicator is to be activated/not activated according to the figure below.

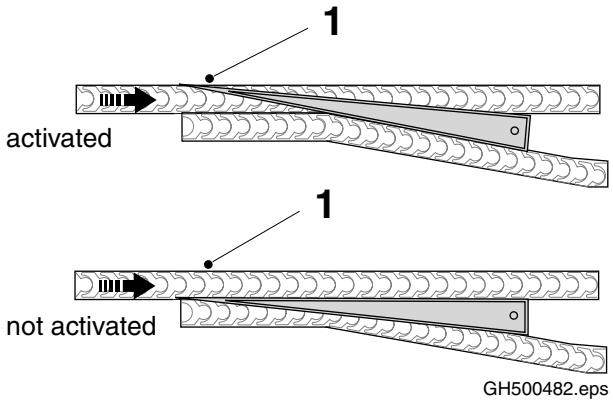

1 gate indicator

(Cont'd)

3.2.4 Installation example

Assemble the photocells

Follow the mounting drawing for external components (chapter 9 Component location) when assembling the photocells.
Depending on function there are two ways to assemble the photocells which we call “Model **A**” and “Model **B**” in this description.
Below is an installation example which shows how the photocells are to be placed depending on their function.

2.2TH601358en.fm

(Cont'd)

Model A (counting photocell pair)

Photocell #: B101,103,105,107,109,111 and 113

This model should be assembled straight and as close as possible (L_4) to the gap between the conveyor sections (see figure below where the arrows indicates the package flow). Follow the instructions for “Model A” in 5.3.3-1 Electrical components - set photocell to set the sensitivity.

L_4= should be as small as possible/max: 300

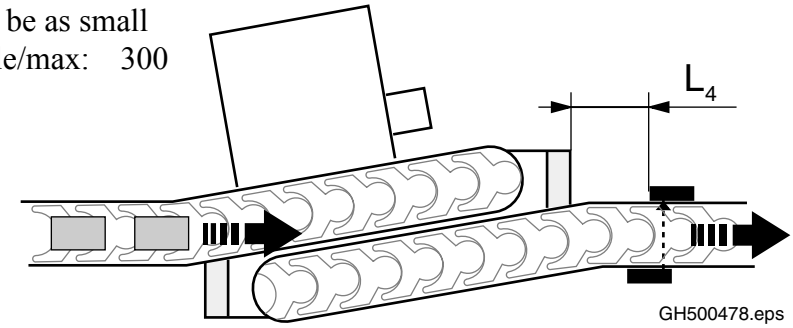

Model B (queue photocell pair)

Photocell #: B102,104,106,108,110 and 112

This model should be assembled with an angle and positioned according to the figure below.
Set the angle by turning the photocells as much as the holes in the bracket admits. Follow the instructions for “Model B” in 5.3.3-1 Electrical components - set photocell to set the sensitivity.

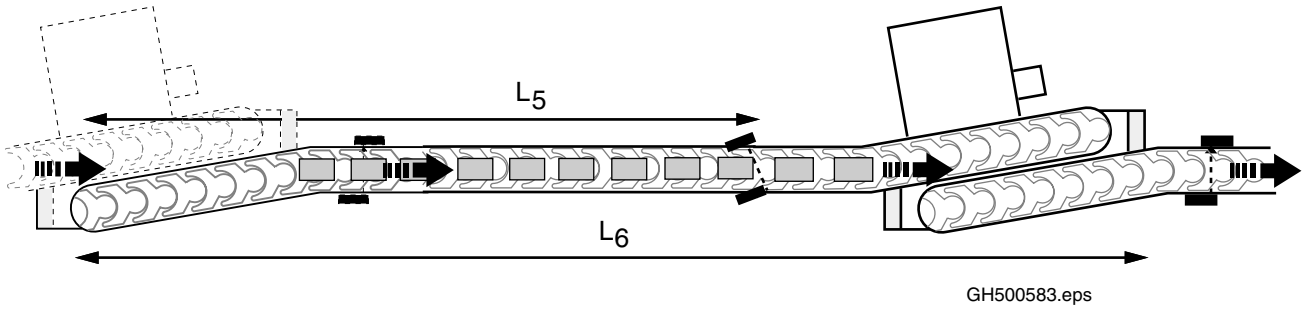

$L_5 \approx L_6 \times 2/3$
L_6 = The total length of the conveyor section

(Cont'd)

(Cont'd)

Model C (reference photocell pair)

Photocell #: B114 and 115

This model should be assembled with an angle as Model B (queue photocell pair) and positioned ~750mm from infeed photocell on the distribution machine. Follow the instructions for "Model B" in 5.3.3-1 Electrical components - set photocell to set the sensitivity.

Note! Never cut the cables short when connecting the photocells. Collect and attach the surplus cable to keep the possibility to move the photocells.

Installation of the cables

IMPORTANT! All the frequency controlled motors must be delta-connected see chapter 11 Mains & connection diagrams.

When installing the cables on the Tetra Conveyor Control System, follow the information in

- The accurate connection drawing (chapter 11 Mains & connection diagrams).
- The mounting drawing for external components (chapter 9 Component location).
- "C-list Machine" (SPC 585833-0101).

Information about how to use these documents is to be found in chapter 6 Electrical documents guide.

2.2TH601358en.fm

Note! To keep the possibility to choose the location for the electrical cabinet in the conveyor installation, the length of the cables is not specified.
Another reason for not specifying the cable length, is the way the cables are installed which also effects the cable length.

Things to think of when installing the cables:

- Choose the right type of cable, follow the "C-list Machine" in (chapter 8 Spare parts).

Note! Always use shielded cables to the frequency controlled motors.

- Connect all cables according to the connection diagrams (chapter 11 Mains & connection diagrams)
- Assemble suitable cable ducts on the conveyors if this has not been done (the cable ducts should be assembled close to the point of connection on each conveyor).
- Separate signal cables and motor cables. Recommended distance is 20 mm or more.
- The connection boxes should be placed according to the mounting drawing for external components. This so that the cables on the electrical components can reach the connection boxes, without being spliced.

(Cont'd)

(Cont'd)

Note! All the cables should be marked according to the connection diagrams (chapter 11 Mains & connection diagrams). External components should be marked according to Tetra Pak standard, see Numbering system for components on page 130.

Conductors shall be marked with the connection point identification at both ends, see (chapter 11 Mains & connection diagrams).

Cables shall be marked as follows:

- with cable number at both ends, if the cable is not entirely visible, and the cable number appears in the electrical documentation,
- with cable number at one end only, if the cable is entirely visible and the cable number appears in the electrical documentation,
- no marking, if the cable is entirely visible and the cable number does not appear in the electrical documentation (e.g daisy chain cable, cable for PLC extension etc.)

3.2.5 Checklist of the installation

Machine status	Mains power ON

3.2.6 Introduction

A portable PC computer equipped with the software “LM 90” is necessary to be able to make the first four (No 1-4) check points.
Start with performing the actions (a-f) below.

a) Connect the portable PC computer to the PLC inside the electrical cabinet.

b) Start the software “LM 90”

c) Choose “programmer package” (F1)

d) Insert the machine diskette (drive A)

e) Select “program folder” on the machine diskette

f) Select tables in the menu (F2)

(Cont'd)

2.2TH601358en.fm

(Cont'd)

1. Check that each photocell pair gives correct input to the PLC-program.

a) Start with doing the actions (a-f) under 3.2.6 Introduction on page 35

b) Type in the nickname of the photocell (see arrow No 3 in the figure below) ore use the “arrow keys” on the keyboard to step forward until the first photocell pair (B101) in the program is seen at the screen (see arrow No 1 in the figure below)

c) Then cover this photocell pair (B101) to simulate an indication and check that the “0” turns to “1” when the photocells is covered (see arrow No 2 in the figure below). If there is no respond, check the connections and the settings (see 5.3.3-1 Electrical components - set photocell) on the current photocells.

d) Repeat the actions (b) and (c) on all the photocell pairs in the installation.

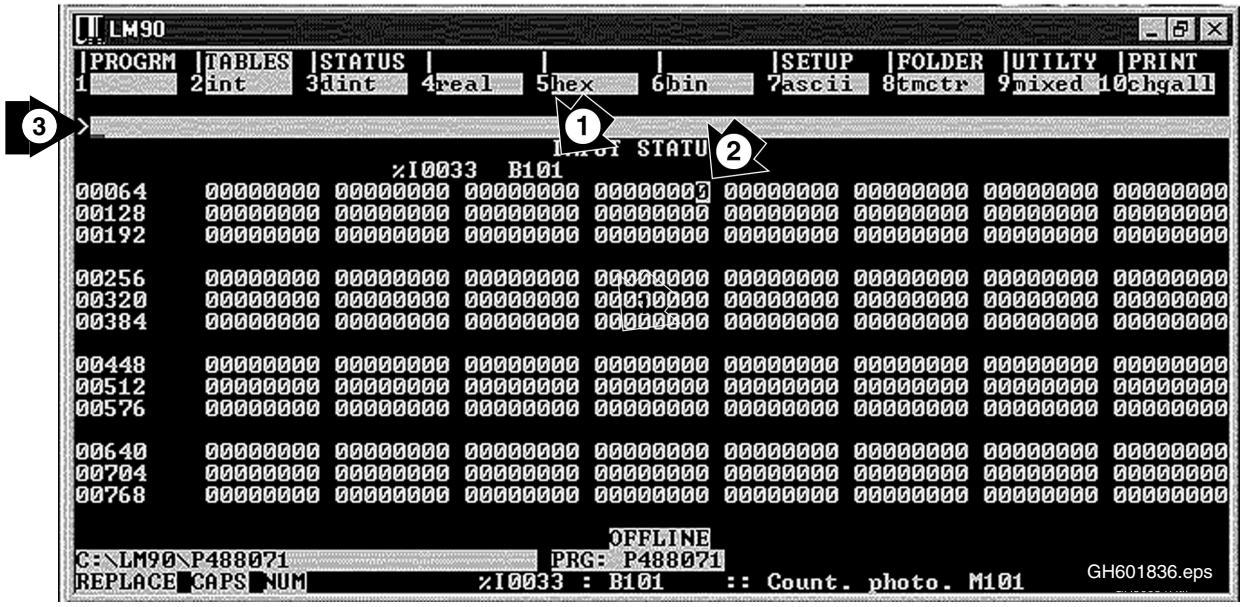

2.2TH601358en.fm

(Cont'd)

(Cont'd)

2. Check that the “ready signal” from each distribution machine in the installation is received in the PLC-program.

a) Start with doing the actions (a-f) under 3.2.6 Introduction on page 35

b) Type in the nickname ore use the “arrow keys” on the keyboard to step forward until the first “ready signal” (DE11) in the program is seen at the right lower corner of
the screen

c) Make sure that the current distribution machine is in production mode (see 4.4.1 Production on page 76 in OM-chapter)

If the PLC does not respond, check the connections.

Repeat the actions (b) and (c) on all the other distribution machines in the installation to make sure that all give a “ready signal” to the PLC.
Follow the mounting drawing for external components
(chapter 9 Component location) to check all the distribution machines.

3. Check that the signal from the gate indicator (Layout 3 & 4) are received in the PLC-program.

a) Start with doing the actions (a-f) under 3.2.6 Introduction on page 35

b) Type in the nickname ore use the “arrow keys” on the keyboard to step forward until the first “ready signal” (151) in the program is seen at the right lower corner of
the screen

c) Make sure that the “gate indicator” is in activated position (see Assemble the gate indicator (option) on page 32.

If the PLC does not respond, check the connections and that the “gate indicator” is entirely in activated position.

(Cont'd)

2.2TH601358en.fm

(Cont'd)

4. Check all the conveyor motors for the production line so that they have the correct direction of rotation.

a) Switch OFF all the safety switches on the conveyor motors.

To be able to do this check, the PLC-program have to be forced.

b) Start with doing the actions (a-f) under 3.2.6 Introduction on page 35

c) Type in the nickname ore use the “arrow keys” on the keyboard to step forward until the first “ready signal” (Q101) in the program is seen at the right lower corner of
the screen

d) Push “F11” to enable force

e) Push “F12” to change input status from “0” to “1”

f) Repeat the actions “b-e” for all safety switches in the installation

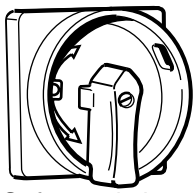

Safety switch

g) Turn all the key switches on the electrical cabinet (for location see page 42) to the position MAN.

h) Then switch ON the safety switches one by one and check that each conveyor motor have the correct direction of rotation.

i) Reset the PLC-program by repeating the actions “c-f” with the difference that the input status is changed from “1” to “0”

Note! Reset the forced inputs by pushing “F11” to disable the force for each input.

(Cont'd)

2.2TH601358en.fm

(Cont'd)

5. Check that each frequency controlled conveyor motor is controlled by the accurate frequency converter.

a) Make sure that all the safety switches are in the position ON.

b) Then break the circuit breakers for all the frequency converters (see the circuit diagrams for which one to break and the figure below for the location in the electrical cabinet)

c) Type in the nickname ore use the “arrow keys” on the keyboard to step forward until the first “ready signal” (Q001) in the program is seen at the right lower corner of
the screen

d) Push “F11” to enable force

e) Push “F12” to change input status from “1” to “0”

f) Turn the key switch on the electrical cabinet (for location see page 42) to the position MAN.

g) Reset the circuit breakers one by one and check that the correct conveyor motor is started

h) Reset the PLC-program by repeating the actions “c-f” with the difference that the input status is changed from “0” to “1”

Note! Reset the forced inputs by pushing “F11” to disable the force for each input.

2.2TH601358en.fm

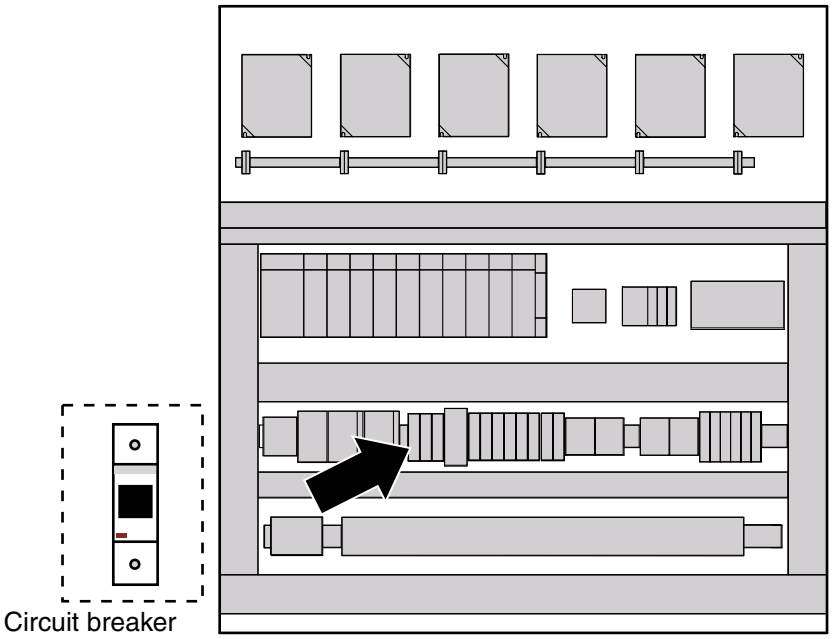

GH601837.eps

(Cont'd)

(Cont'd)

6. Final check that the installation is done correctly.

Run the installation (not filling machine) with the “key switch” (for location see page 42) on the electrical cabinet in normal position (AUT).

By covering the photocells in the installation in a special order and in special combinations, the function of the PLC-program can be checked.

Note! The time the photocells are to be covered should be according to the “time delay” in the PLC-program which must run out before action

The table on next page consists of three columns. The middle column shows what conditions that must be fulfilled to make the action in the right column happen.

i) Start at the top of the middle column of the table by pushing the “step down button” on the distribution machine that is closest to conveyor section 1.

Result: The PLC-program in the Tetra Easy Ride Plus will lose the ready signal from the current distribution machine. If everything is set right the conveyor section (with frequency controlled motor) closest to the distribution machine will go down to low speed.

j) Reset the current distribution machine by pushing the step up button once.

Result: The conveyor installation will return to normal production.

(Cont'd)

(Cont'd)

k) Block the beam by covering the photocell pair “model A” on the conveyor section (with frequency controlled motor) closest to the distribution machine.

Result: If everything is set right the conveyor section (with frequency controlled motor) closest to the distribution machine will go down to low speed.

l) Continue fulfilling the conditions according to the table and check that the current action in the right column happens.

Accumulation flow	Conditions	Action
↓	distribution machine steeped down **or** photocell pair **B101** covered	conveyor motor **M101** goes down to low speed
	keep photocell pair **B101** covered on all the following sequences	
	photocell pair B103 covered	conveyor motor **M102** goes down to low speed
	photocell pair B102 covered	conveyor motor **M102** goes down to low speed and conveyor motor **M101** stops
	photocell pair B105 covered	conveyor motor **M103** goes down to low speed
	photocell pair B104 covered	conveyor motor **M103** goes down to low speed and conveyor motor **M102** stops
	photocell pair B107 covered	conveyor motor **M104** goes down to low speed
	photocell pair B106 covered	conveyor motor **M104** goes down to low speed conveyor motor **M103** stops
	photocell pair B109 covered	conveyor motor **M105** goes down to low speed
	photocell pair B108 covered	conveyor motor **M105** goes down to low speed and conveyor motor **M104** stops
	photocell pair B111 covered	conveyor motor **M106** goes down to low speed
	photocell pair **B110** covered	conveyor motor **M106** goes down to low speed and conveyor motor **M105** stops
	photocell pair B112 covered	conveyor motor **M106** stops
	uncover photocell pair **B101**	all the conveyor motor restarts

7. Check that “package coming” signal from filling machine is received in the PLC-program.

a) Start with doing the actions (a-f) under 3.2.6 Introduction on page 35

b) Type in the nickname ore use the “arrow keys” on the keyboard to step forward until PC1 in the program is seen at the right lower corner of the screen

c) Make sure that the filling machine is in production mode

If the PLC does not respond, check the connections.

2.2TH601358en.fm

3.3 Technical data & drawings

3.3.1 Installation drawing

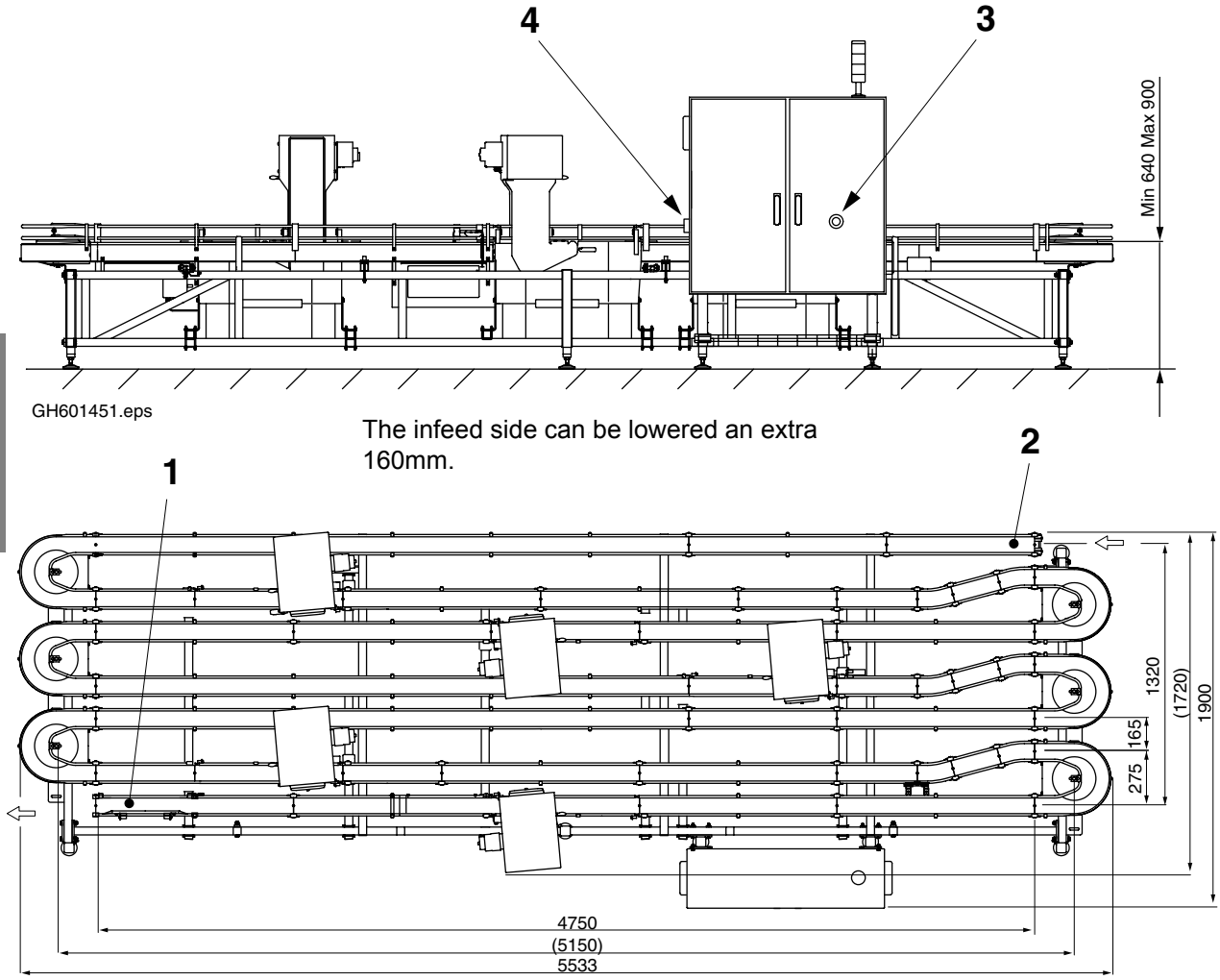

1 Connection point outfeed
2 Connection point infeed
3 Emergency stop
4 Main switch

(Cont'd)

(Cont'd)

Placement of queueguards

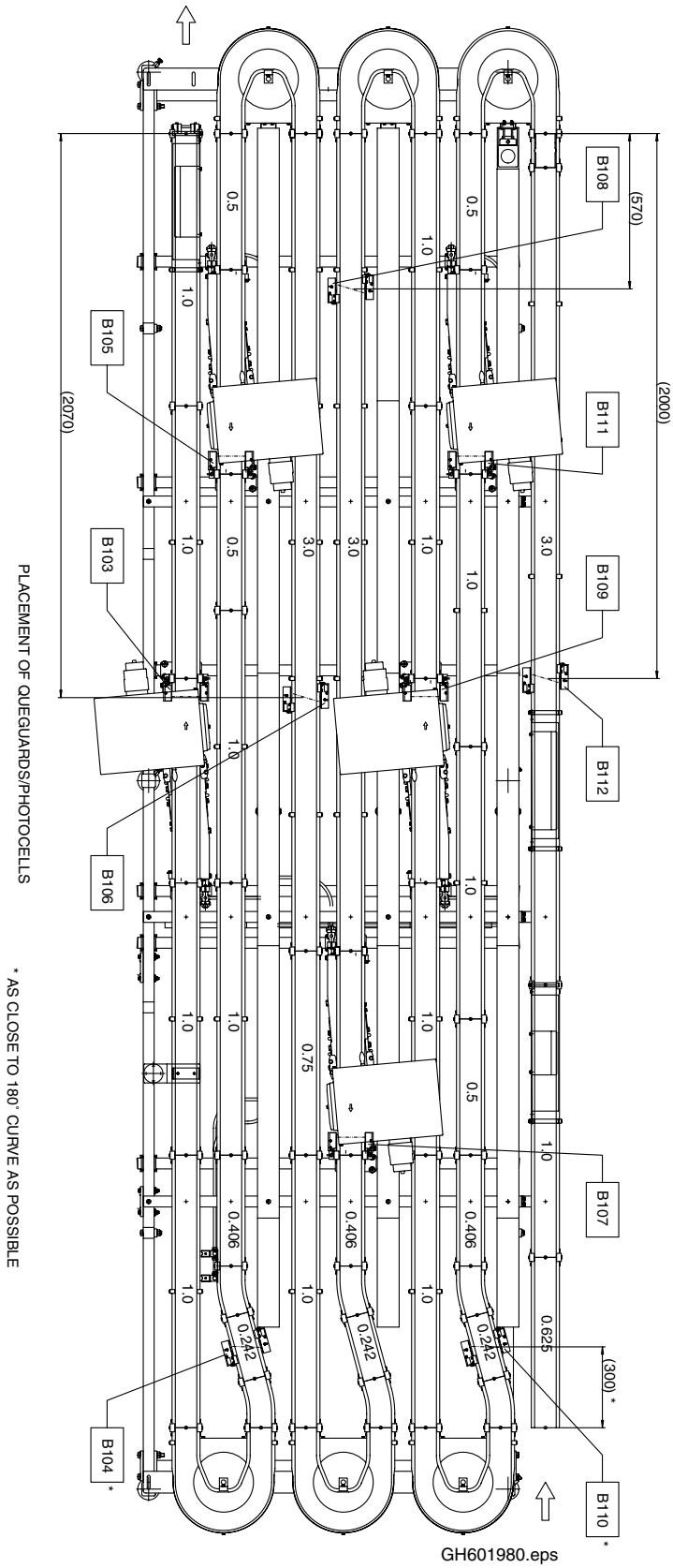

Required clearance

The below drawing show the required clearance around the machine.

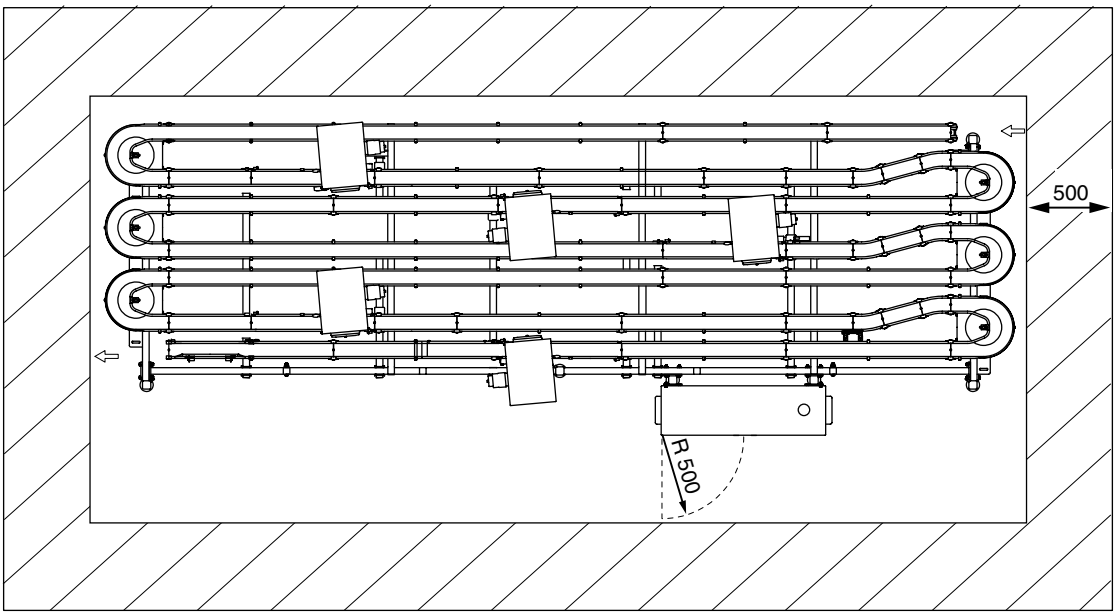

GH601480.eps

Operating area

Service area

2.2TH601358en.fm

(Cont'd)

(Cont'd)

Connections

Electricity and conveyor lubrication.

The below drawing show the location of the connections for electricity (5) and conveyor lubrication (6).

DANGER!

Risk of electrical shock!
The voltage is 400V inside the electrical cabinet. Risk of immediate danger to life through electrical shock. In case of accident, immediately call for medical attention.

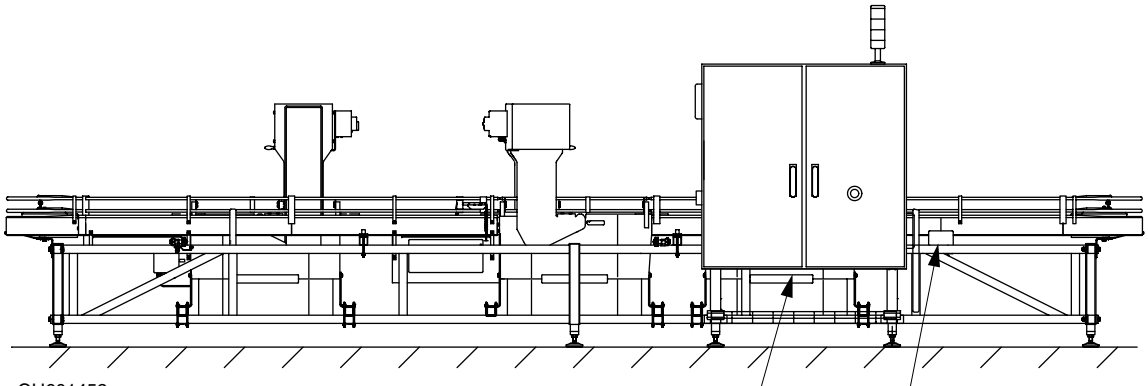

GH601452.eps

5 Electrical connection
6 Conveyor lubrication

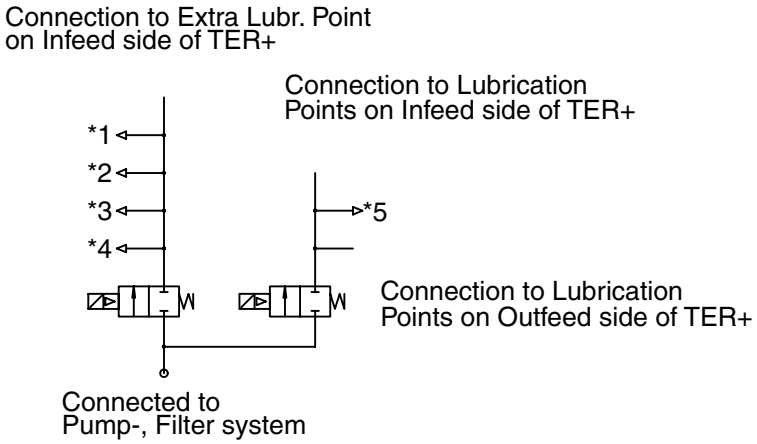

*1 Connected to Lubrication Point on 1:st D/E Unit
*2 Connected to Lubrication Point on 2:nd D/E Unit
*3 Connected to Lubrication Point on 3:rd D/E Unit
*4 Connected to Lubrication Point on 4:th D/E Unit
*5 Connected to Lubrication Point on 5:th D/E Unit

LUBRICATION SYSTEM GH601894.eps

(Cont'd)

2.2TH601358en.fm

3.3.2 Mass / weight

Data

Weight	Kg	Delivery packing	mm
Machine weight	800	Length	600
Shipping weight	1500	Width	2100
		Height	2000

Centre of gravity point

The below illustrations show the centre of gravity point.

Fork lift position

Use the lift eye bolts when lifting the machine.

IMPORTANT! **Risk of damage to equipment!**
Beware not to hit the machine with fork lift. It could result in serious damage on the machine.

Note! After any moving of the machine, it should be put down gently.

3

7 Centre of gravity point
8 Lift eye bolt

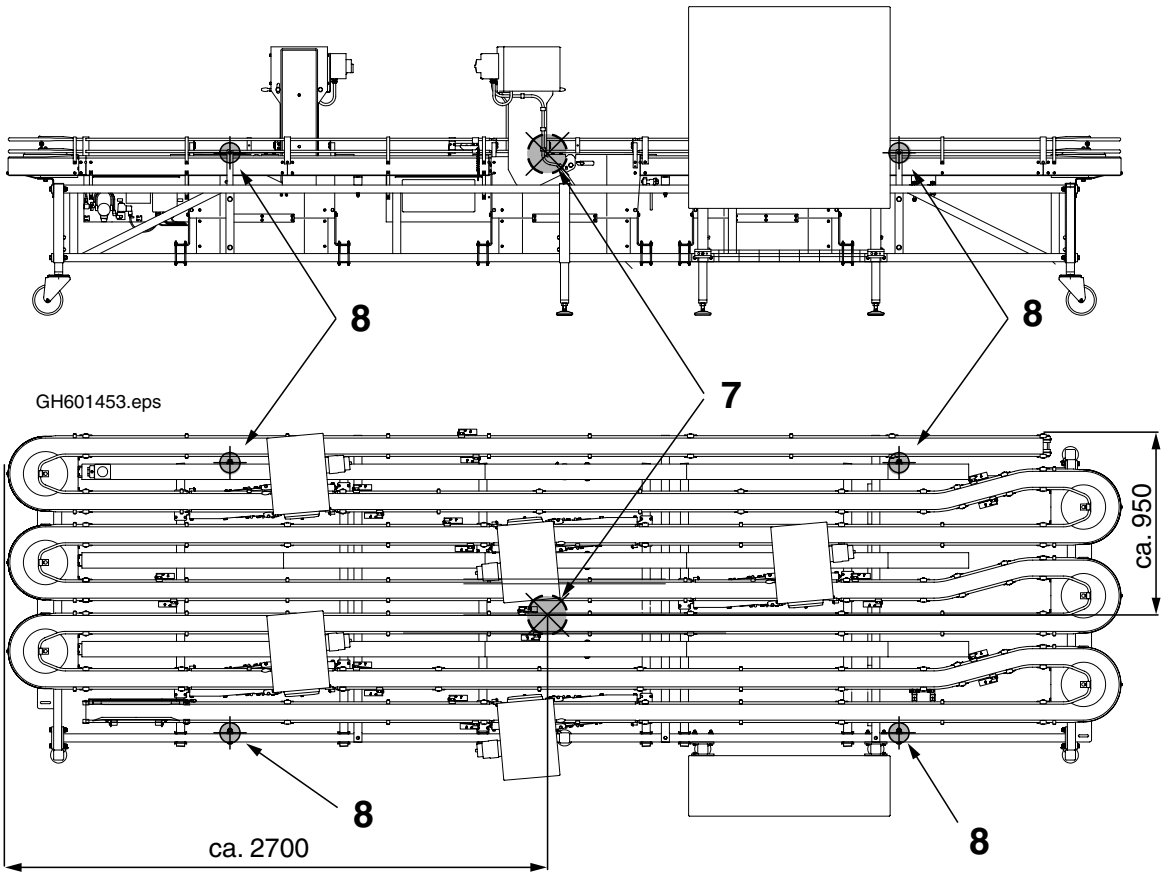

2.2TH601358en.fm

(Cont'd)

3.3.3 Production data

Utility connections

The following table supplies utility connections data needed when installing the machine.

Utility	Type of data	Value / Unit
Electricity	Consumption	2.0 kW
	Voltage etc.	3N~50Hz 400/230V 3N~60Hz 400/230V
	Fuse dimension	10A
	Cable area	2.5 mm^2
	Consumption	0.6 Nm^3 /h

2.2TH601358en.fm

3.4 Site preparation

3.4.1 General requirements on site

General

In order to obtain the best possible working condition for the machine, it is necessary to follow our recommendation of data according to section 3.3 Technical data & drawings.

Floor

To obtain a proper production it is necessary that the machine is standing stable on the floor. It is important that the floor is in good state condition.

2.2TH601358en.fm

3.5 Machine handling

3.5.1 Crate handling

Data

The following table contains the data needed for handling the crate.

Weight Kg	Length mm	Width	Height
2000	5700	2100	2000

Transport and auxiliary equipment

DANGER!

Immediate danger to life!
Follow the recommendations below to avoid injury.

The following equipment is required for handling the crate.

Equipment	Capacity Kg	Quantity
Forklift	3000	1

Lifting and unloading

DANGER!

Immediate danger to life!
To safely and efficiently lift and unload the crate from the delivery vehicle, read the instructions on next page.

(Cont'd)

2.2TH601358en.fm

(Cont'd)

Correct fork lift

DANGER!

Immediate danger to life!
The crate may tilt if not observing the centre of gravity or the fork lift points. Failure to observe will result in immediate danger to life and / or major damage to equipment.

Insert the forks so that the centre of gravity (1) is placed between the forks. The forks should be set as wide as possible.

1 Centre of gravity point

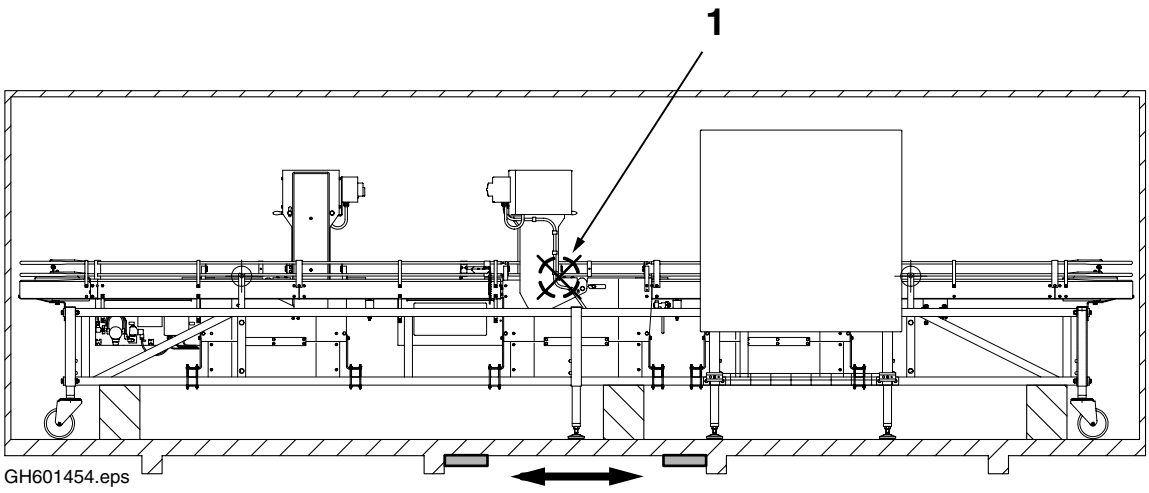

2.2TH601358en.fm

3.5.2 Storage

Contents	Recommended storage temperature	Recommended storage humidity	Special recommendations
Tetra Easy Ride Plus	- 20°C to + 70°C	10 - 95%	Keep dry to prevent condensation and corrosion on connections inside the electrical cabinet.

3.5.3 Inspection

Inspection documentation

Enclosed you will find a Transport Damage Report that has to be filled in as soon as the machine is uncrated. If any Tetra Pak equipment is damaged when opening the crate, take pictures to illustrate the damage and enclose the photographs.

The report and the pictures (if any) should be sent to:

Tetra Pak Carton Ambient AB
Quality Assurance
Ruben Rausings gata
S-221 86 Lund
Sweden

Note! The Transport Damage Report must be filled in and returned even if there is no damage to report.

3.5.4 Disposal / re-use

Re-usable packing materials and structures

Re-usable packaging materials and structures should be collected and re-used in accordance with local regulations.

Non re-usable packing materials and structures

Non re-usable packaging materials and structures should be collected and disposed of in accordance with local regulations.

3.5.5 Machine transport

General

Prior to move the machine into position for assembling, do the following:

- check that the machine can be transported to the assembly site without any problems regarding ceiling height, doors, passages, etc.

DANGER!

Immediate danger to life!
The machine may tilt if not observing the centre of gravity or the fork lift points. Failure to observe will result in immediate danger to life and/or major damage to equipment.

- make sure that the equipment can be lifted in accordance with the instructions in Centre of gravity point, on page 46.

2.2TH601358en.fm

3.6 Position, assembly & connections

3.6.1 Space requirements

The space requirements for this machine are given in the installation drawings shown in chapter 3.3 Technical data & drawings.

3.6.2 Positioning

Check that the machine can be transported to the assembly site without any problems as regards ceiling height, doors, passages, etc.

DANGER!

Immediate danger to life!
The machine may tilt if not observing the centre of gravity or the fork lift points. Failure to observe will result in immediate danger to life and/or major damage to equipment.

Make sure that the machine can be lifted and moved in accordance with heading Centre of gravity point, on page 46, and sub section 3.5.5 Machine transport.

Note! When the machine is in right position replace the four wheels with the machine feet, which are delivered with the machine.

3.6.3 Levelling

Make sure that the machine is level by means of for example a spirit level. Place the spirit level on the cross beams as well as on the longitudinal beams. If necessary, adjust by turning the machine feet.

3.6.4 Assembly of TPC 21 holders

Template 1366767

The template consists of a handle, two blocks with measure, screw and nut.

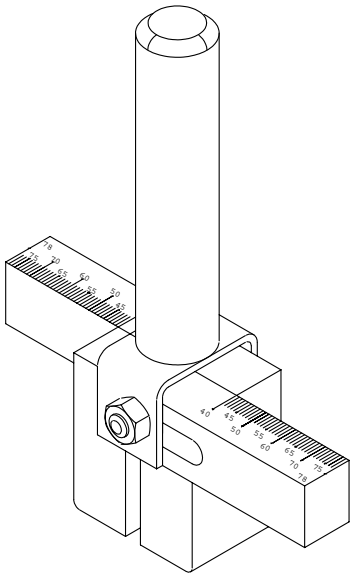

GH601605.eps

2.2TH601358en.fm

Railing

The railings are adjustable for widths between 40-78 mm.

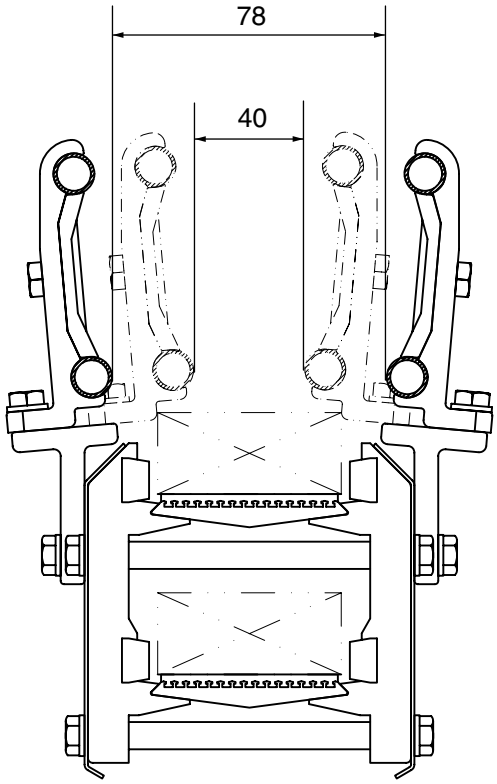

GH601585.eps

2.2TH601358en.fm

Adjustment of template

Loosen the screw on the template. Measure the package width A. The measure on the template should be the package width + 10%, maximum 6 mm. Set the measure and tighten the screw. Insert the template and adjust the width of the bottom rail.

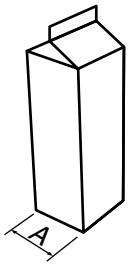

GH600057.eps

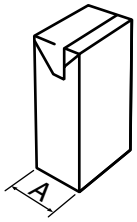

GH600033.eps

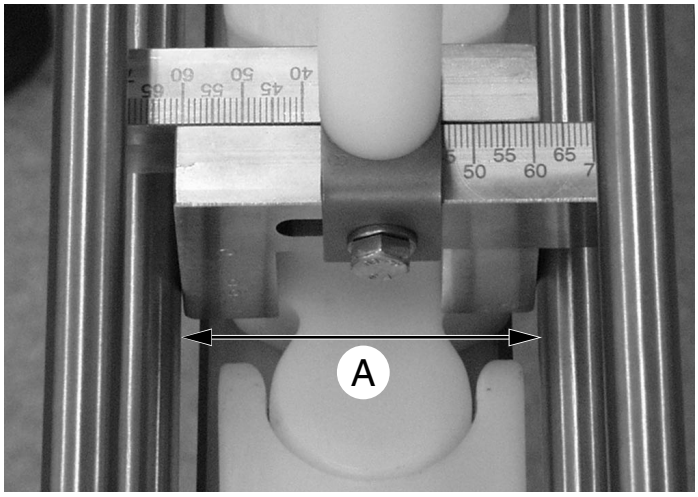

GH601575.eps

(Cont'd)

(Cont'd)

Adjustment of straight conveyors

To set conveyor width, perform the following steps:

d) Loosen the screws for width adjustment (1).

e) Adjust the template according to Adjustment of template on page 53.

f) Centre the rails over the chain

g) Push the lower rails (2) against the template, tighten the screws (1)

1 Screw
2 Rails

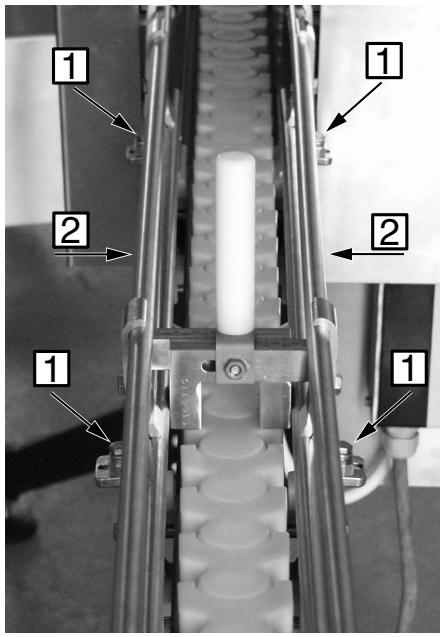

GH601577.eps

Adjustment of curves

Note! All curves are preset to run in the direction as the arrow on the rail shows.

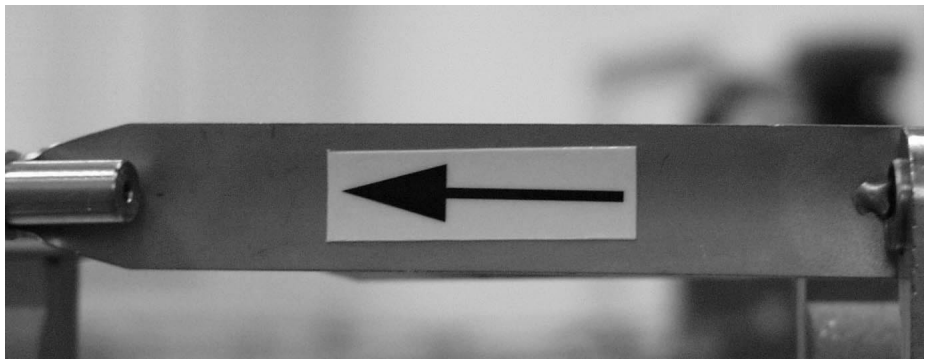

GH601696.eps

(Cont'd)

2.2TH601358en.fm

(Cont'd)

Glide curves

To set conveyor width, perform the following steps:

h) Loosen the screws (1) for width adjustment.

i) Adjust the template according to Adjustment of template on page 53.

j) Centre the rails over the chain

k) Push the lower rails against the template, tighten the screws (1)

1 Screw

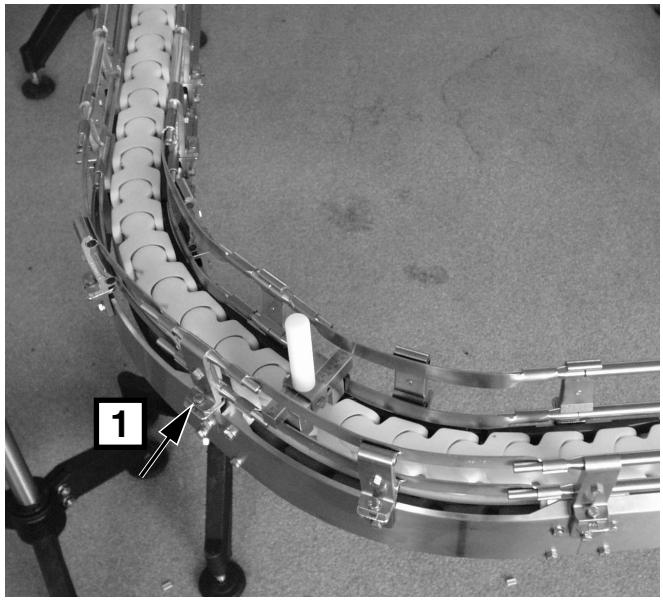

GH601578.eps

2.2TH601358en.fm

Wheel curves

To set conveyor width, perform the following steps:

a) Loosen the screws (1) for width adjustment, nut (2) and clamp (3) on the in- and outfeed side.

b) Adjust the template according to Adjustment of template on page 53.

c) Centre the rails over the chain

d) Push the lower rails against the template, tighten the screws (1), nut (2) and clamp (3).

1 Screw
2 Nut
3 Clamp

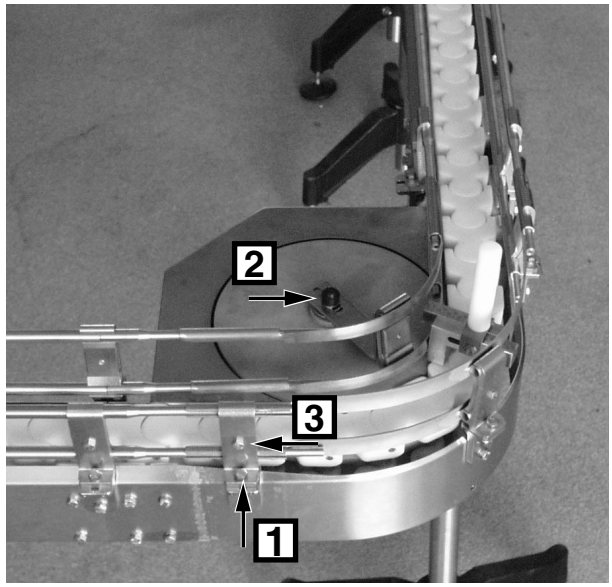

GH601579.eps

Note! Adjust the rail centred of the chain.

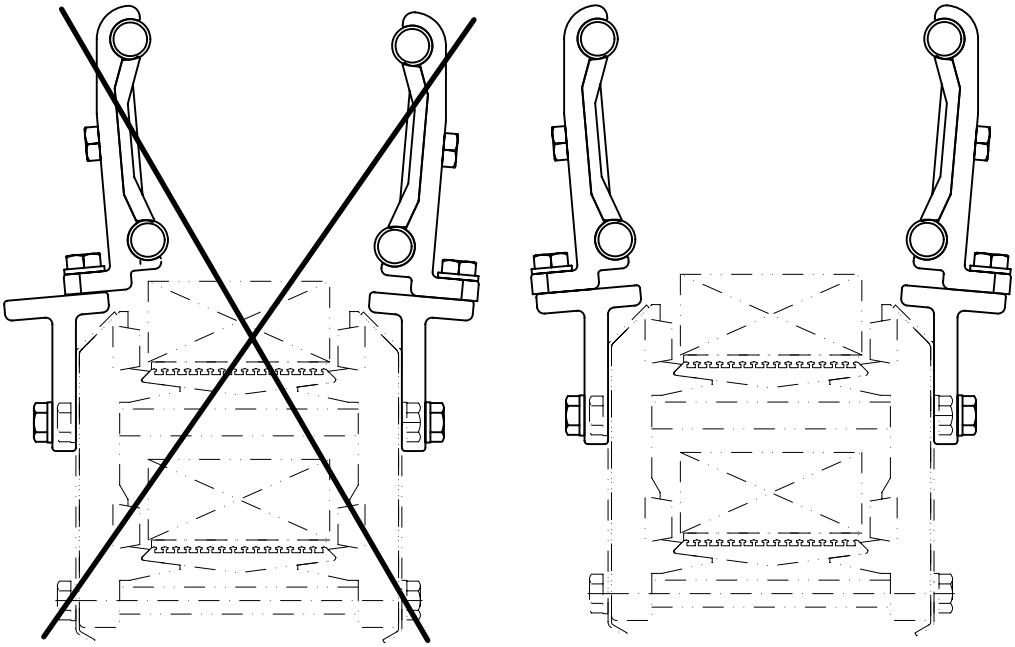

GH601606.eps

2.2TH601358en.fm

Assembly of TPC 53 rails

Rails

Perform the following to mount the rail locking pin.

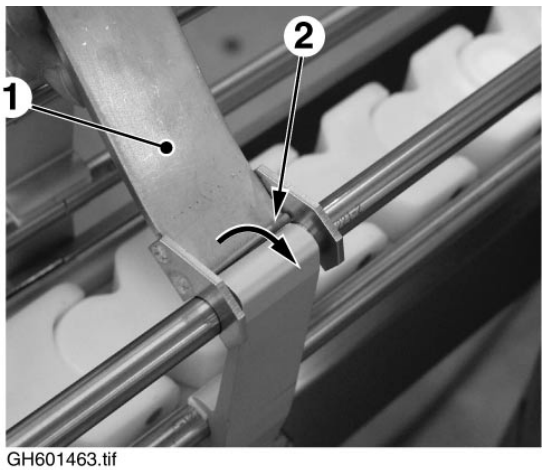

GH601463.tif

1 Tool
2 Rail locking pin

GH601464.tif

Perform the following to remove the rail locking pin.

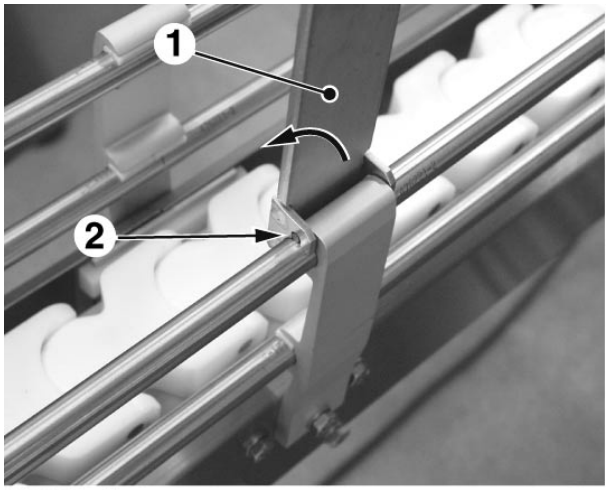

GH601465.tif

1 Tool
2 Rail locking pin

GH601466.tif

2.2TH601358en.fm

Infeed and outfeed conveyors

Make sure that machine is in correct height position according to connecting conveyors, if necessary adjust the height.

To connect the conveyor parts, perform the following steps:

a) To facilitate the assembling, push out the side plates and fix the slide plates with the centring tools, included in Conveyor tool kit.

b) Undo (about two turns) the four screws holding the joint piece.

c) Fit the conveyor parts together and remove the centring tools.

d) Use four more screws and washers. Tighten the eight screws.

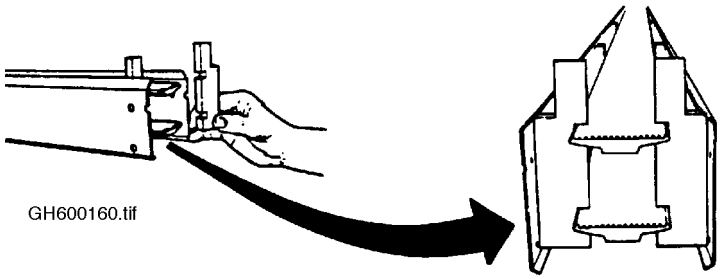

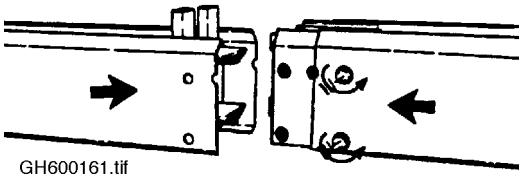

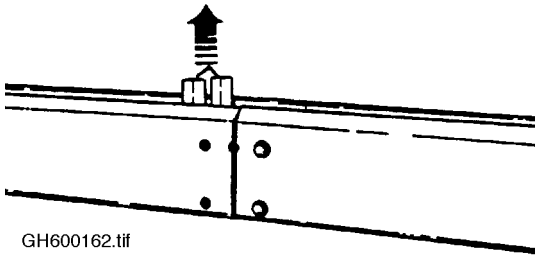

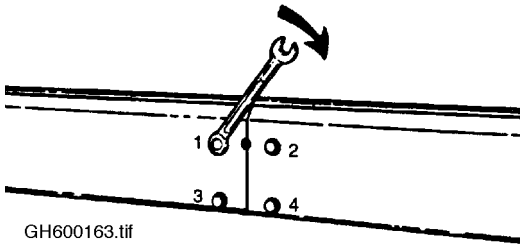

2.2TH601358en.fm

3.6.5 Connections

Electricity

DANGER!

Risk of electrical shock and short circuits!
Make sure that power is switched OFF upstream before performing any work on cables and electrical components.

To connect the electricity, see the Electrical documents, chapter 7 Main connecting diagram.

See also headings Connections 45.

2.2TH601358en.fm

3.7 Preparation for commissioning

3.7.1 Start Up Machine Quality Report

Background

Tetra Pak Carton Ambient AB uses a feedback system based on reporting product failures or short coming on newly delivered machines.

Description of the report

Start Up Machine Quality Report (SUMQR) is a user return card, providing check list which can be used to report the state of packing, appearance and the initial performance of the product.

The SUMQR is an important source of information. The information is the basis for the statistics, helping us to improve our products.

The Start Up Machine Quality Report consists of two parts:

- Basic information
- Fault description

Note! The SUMQR should not be used as a claim form. Defective parts should be reported on the SUMQR, however to obtain compensation for defective parts or components, please handle in accordance with the rules specified in “General Conditions” and the general claim procedure issued by Tetra Pak Carton Ambient AB.

Please note that the summaries, analyses and reports can not be accurate unless the basic records are accurate.

Returning of the report

In accordance to the general claim procedure, issued by Tetra Pak Carton Ambient AB, we accentuate the need of returning this report, **even if you have nothing to report**.

Please send your SUMQR to:

Tetra Pak Carton Ambient AB
QA
Ruben Rausings gata
S-221 86 Lund
Sweden

(Cont'd)

2.2TH601358en.fm

(Cont'd)

Basic Information

The Basic Information part of the Start Up Machine Quality Report (SUMQR) lets you specify basic information about the customer and machine.

Complete the basic information part of the report.

Tetra Brik Packaging Systems AB
Distribution Systems

START UP
MACHINE QUALITY REPORT

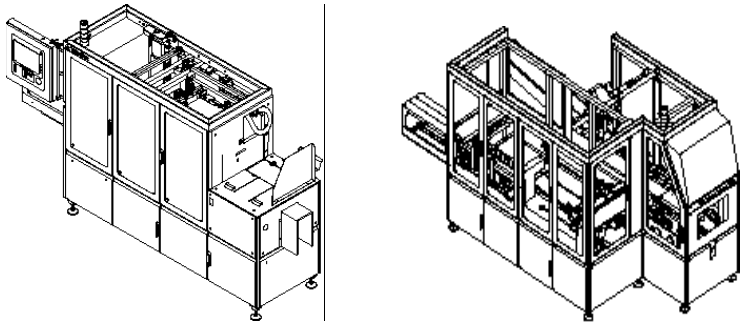

IMPORTANT

The Start Up Machine Quality Report is a **user return card**, providing check lists which can be used to report the state of packing, appearance and the initial performance of the product. An important source of information which will be the basis for the statistics, helping us to improve our products.
Please note that the summaries, analyses can not be accurate unless the basic records are accurate.

In accordance with the general claim procedure we accentuate the need of returning the reports attached to this frontpage, **even if you have nothing to report**.

Please send your SUMQR to:

Tetra Brik Packaging Systems AB
QA

Ruben Rausings gata
S-221 86 Lund
Sweden

Fax: +46 46 36 26 78

DE-5071-06

GH500560.eps

2.2TH601358en.fm

3

Fault description

The Fault description part of the Start Up Machine Quality Report (SUMQR) lets you specify any machine faults currently being found when installing the machine.

Complete the fault description part of the report:

Note! Don't forget to fill in TP-company, country and contact person.

Tetra Brik Packaging Systems AB

Distribution Systems Page ( )

START UP
MACHINE QUALITY REPORT

Machine no	**TP-company**
Country	**Contact person**

No remarks **When it is a transport/misc. damage, jump over B/BE-group, C/CE-group.**

1 **Lowest B/BE-group**

2 **What happened**

3a **What was the probable reason** (damage article, note part no)

3b **C/CE-group, place**

4 **What was done**

5 **Action proposal to TPD** (design, final-testing etc.)

Additional/other information

1 **Lowest B/BE-group**

2 **What happened**

3a **What was the probable reason** (damage article, note part no)

3b **C/CE-group, place**

4 **What was done**

5 **Action proposal to TPD** (design, final-testing etc.)

Additional/other information

1 **Lowest B/BE-group**

2 **What happened**

3a **What was the probable reason** (damage article, note part no)

3b **C/CE-group, place**

4 **What was done**

5 **Action proposal to TPD** (design, final-testing etc.)

Additional/other information

DE-5071-06

GH500561.eps

2.2TH601358en.fm

3.8 Disassembly and removal

3.8.1 Preparation

Requirements on personnel

Personnel requirements needed to disassemble and handle the unit, see section Requirements on personnel in chapter 2.

Transport and auxiliary equipment

Required tools and auxiliary equipment needed for the job, see heading Transport and auxiliary equipment, on page 49.

Utility connections

De-energize the machine, that is, shut off supplies of electricity and compressed air.

3.8.2 Disconnect utilities

Electricity

Risk of electrical shock and short circuits!
Make sure that power is switched OFF upstream before performing any work on cables and electrical components.

Disconnect the electricity, see the Electrical documents, chapter 7.

2.2TH601358en.fm

3.8.3 Disassembly of machine

WARNING! **Risk of personal injury!**
Before you start to disassemble the machine, then you should read the Safety precautions.

Disassemble the machine in the reverse order as described in the sub-section 3.6.4 Assembly of TPC 21 holders.

3.8.4 Storage preparation

If the machine is going to be transported to a storage site, then see sub-section 3.5.2 Storage for more information about environmental factors, such as acceptable storage humidity and temperature range.

3.8.5 Moving

3

DANGER! **Immediate danger to life!**
The machine will tilt if not observing the centre of gravity or the fork lift points. Failure to observe will result in immediate danger to life and/or major damage to equipment.

Prior to lift and move the machine from its production site, do the following:

- Check that the machine can be transported without any problems with the ceiling height, doors, passages, etc.
- Make sure that the machine can be lifted in accordance to sub-section 3.3.2 Mass / weight.

2.2TH601358en.fm

3.8.6 Re-crating

Read the instructions in sub-section . Re-crate the machine in the reverse order.

3.8.7 Final disposal

Contact your Tetra Pak market company for more information about final disposal and reuse.

4 Operation instructions

4.1 General description

This section gives the operator information about where on the equipment the parts that the operator needs to be in contact with are located. It also gives the operator a description of function.

4.1.1 Key switches and push buttons

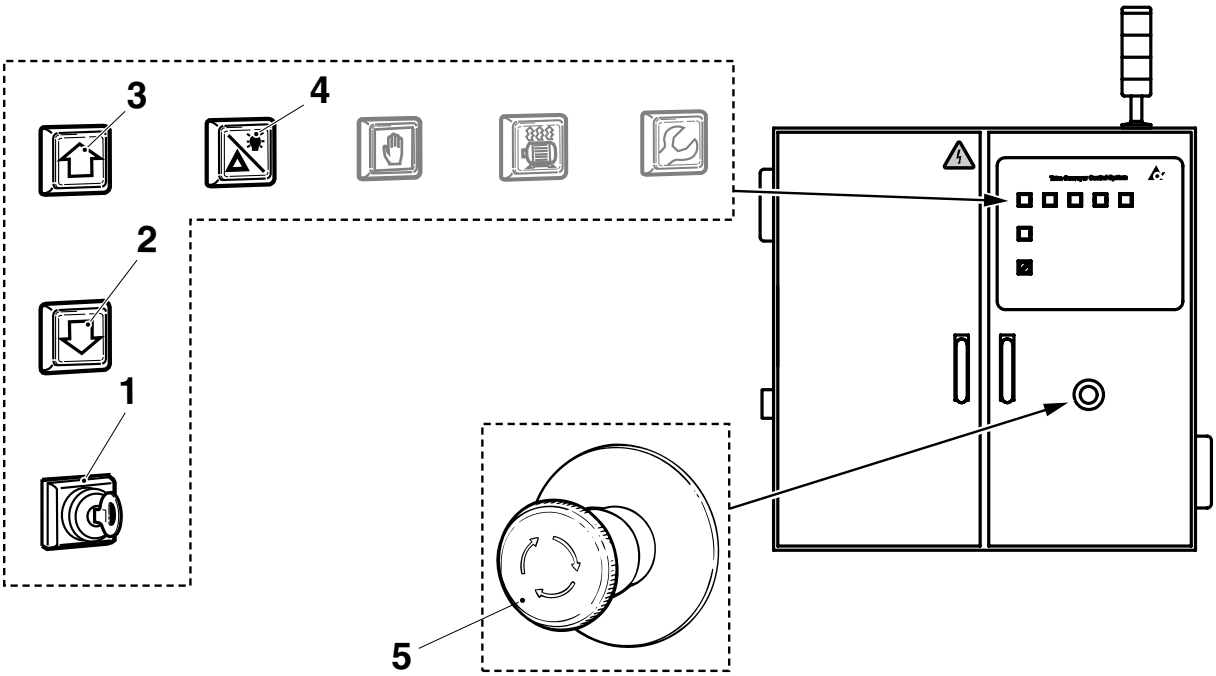

GH601447.eps

2.2TH601359en.fm

4

Key switch

1 Line 1 **Note!** The normal position for the key switch is AUT during production. The position MAN is intended as a temporary mode when the controlling functions for some reason are out of order.

Push buttons

2 Step down
3 Step up
4 Alarm reset/Lamp test
5 Emergency stop button[1]

1. For more information about the emergency stop button, see header Emergency stop on page 18.

4.1.2 Functional description

Background

The Tetra Easy Ride Plus is used to control the flow of packages between filling machines and distribution equipment to get maximum efficiency and optimal accumulation on each production line. It is also used to obtain careful handling of the packages.

General description

This is a general description of the function on a Tetra Easy Ride Plus (see the example on page 69).

The different control functions in the Tetra Easy Ride Plus work as follows:

Sequence and speed control

Description

By controlling the speed and the stops of the conveyor sections (**1-6**), the packages are fed on to the conveyor closest to the distribution machine at an even pace to achieve maximum performance of the entire packaging line. In order to obtain an even flow of packages, each driving unit (**E**) for the concerned conveyor section is controlled separately. This is done by two kinds of photocells, counting (**A**) and queue guards (**B**). The conveyor sections are slowed down and stopped one after another in the order they are numbered (**1-6**), see Accumulation sequence table on page 68. When the first stopped conveyor section has been restarted, the conveyor sections are restarted, one section after another.

(Cont'd)

2.2TH601359en.fm

(Cont'd)

Function

If any of the photocells (**A**) on the conveyor sections **(1-6)** detect that the flow of packages is changed, the control system responds in order to regulate the speed on the concerned conveyor section, that is, to control the flow of packages into the distribution machine in a way to get maximum capacity on the distribution machine.

If any of the photocells (B) on the conveyor sections (1-6) detects that there has become a queue of packages and the previous conveyor section has stopped, then after a few seconds the concerned conveyor section stops and the next conveyor section is slowed down.

The table below shows an complete accumulation sequence for the whole conveyor line.

Accumulation flow	Action
↓	conveyor section **1** goes down to low speed
	conveyor section **2** goes down to low speed and conveyor section **1** stops
	conveyor section **3** goes down to low speed and conveyor section **2** stops
	conveyor section **4** goes down to low speed conveyor section **3** stops
	conveyor section **5** goes down to low speed and conveyor section **4** stops
	conveyor section **6** goes down to low speed and conveyor section **5** stops
	conveyor section **6** stops

Accumulation sequence table

Short stop

After the last conveyor section (**6**) has stopped, the filling machine goes to **Short stop** during a certain time.

Automatic conveyor stop

If the filling machine stops to produce packages, the whole conveyor line is stopped after a certain time.

(Cont'd)

2.2TH601359en.fm

(Cont'd)

Tetra Easy Ride Plus installed with a sixth motor. The sixth motor is required when the infeed conveyor to the DE machine exceed 6 meters. The sixth motor is only to be used between the TER+ and the DE machine.

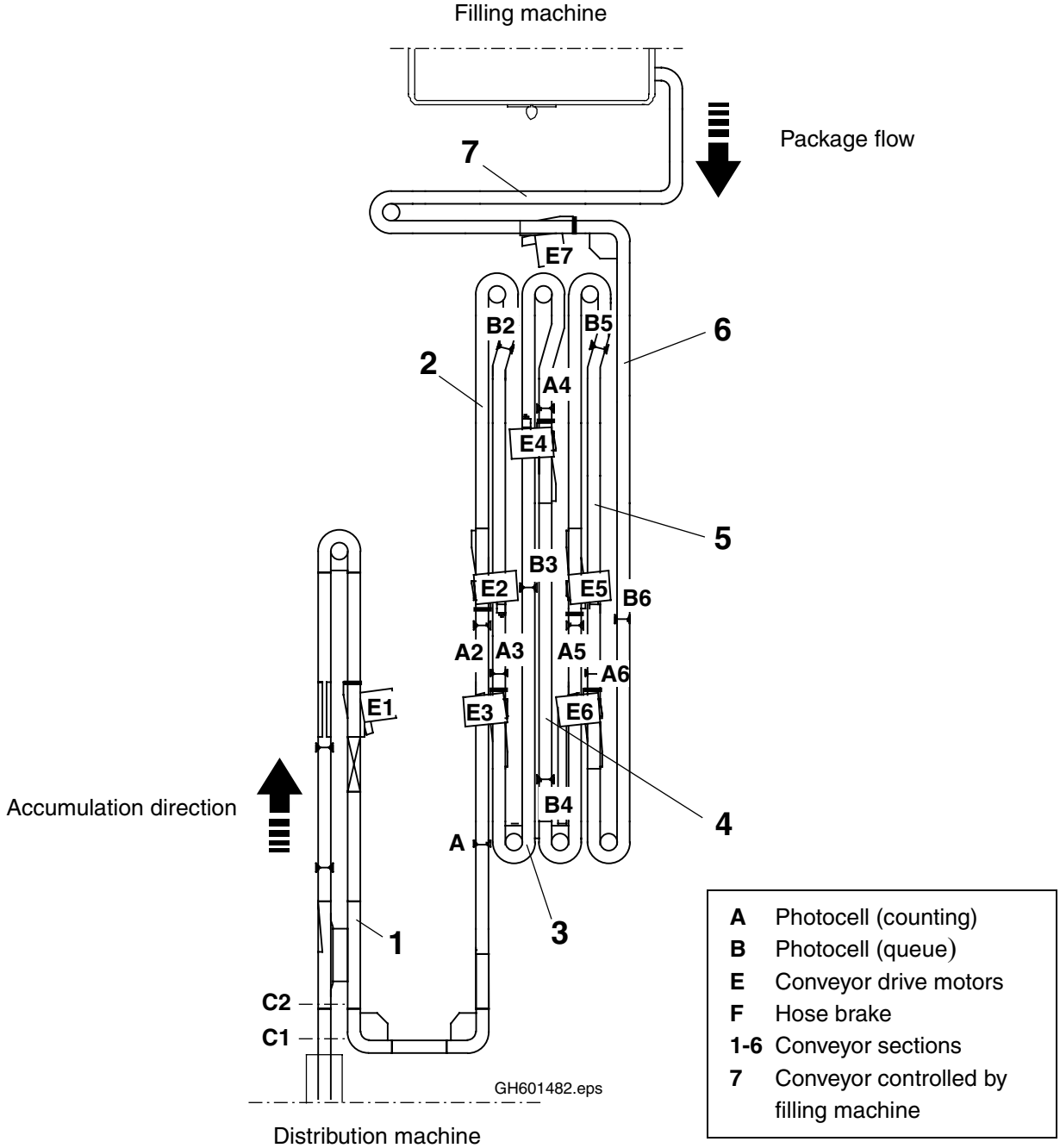

2.2TH601359en.fm

4

4.2 Control panel/Alarms

This section describes all the alarms that can appear and the actions that the operator should take to correct them.

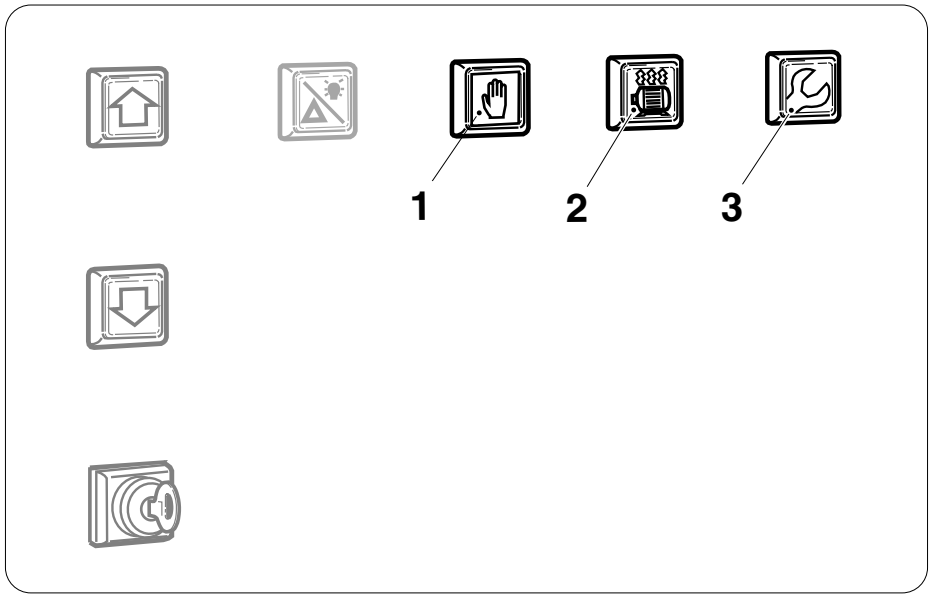

GHB00376.eps

Panel on the electrical cabinet

Pos	Alarm	Cause	Machine action	Instruction to operator
1	Emergency stop	**Emergency stop button** pushed or, alternatively, other emergency stop equipment activated.	The machine installation stops.	Perform the actions described in section **4.5.1 Emergency stop, items b - d.**
2	Motor protection	Motor protection triggered.	The concerned conveyor stops.	Call a technician.
2	Motor protection	Surge protection triggered.	Only indication with 0.5 sec on / 2 sec off.	Call a technician.
2	Motor protection	Backup battery in PLC empty.	Only indication with 0.5 sec on / 2 sec off.	Call a technician.
2	Motor protection	Memory-cell in PLC is in “force mode”.	Only indication with 0.5 sec on / 2 sec off.	Call a technician.
3	Conveyor switch	**Conveyor switch** is turned **OFF.**	The concerned conveyor stops and the motor start is blocked.	The concerned conveyor must not be in operation.

4.2.1 Warning and indication lamp

Warning lamp functions

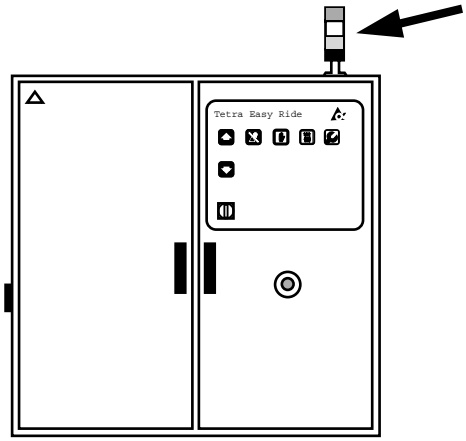

GH500510.eps

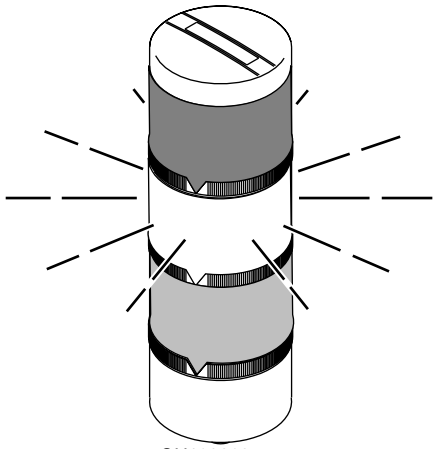
GH102362.eps

Depending on what kind of alarm that has been triggered, the result is as follows:

- If the red colour, at the top, is flashing, this indicates that the emergency stop button is pushed or, alternatively, other emergency stop equipment activated which is a dangerous status.
- If the yellow colour, in the middle, is flashing, this indicates an abnormal status such as motor protection triggered or a conveyor switch turned OFF. This requires an immediate action from the operator.

Note! When several alarms are triggered at the same time, only the alarm with the highest alarm status (red before yellow) is giving a signal to the warning lamp.

Do the following:

a) Note which alarm is flashing.

b) Press **Alarm reset** to acknowledge the alarm.

c) Take appropriate actions. See 4.2 Control panel/Alarms on page 70.

d) Press **Alarm reset**, if necessary.

When the corrective action has been taken both the alarm/alarms and the warning lamp will go out.

Indication lamp functions

- If the green colour, at the bottom, lights up, this indicates that the complete production line is ready for production, that is, all the distribution machines and the conveyor control system are in production mode.

2.2TH601359en.fm

4.3 Preparations

This section describes all the actions that should be carried out before actually starting the equipment.

4.3.1 Main switch

Make sure that the **Main switch** is in position ON.
It should always be in this position.

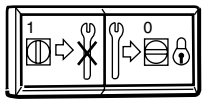

GH102085.eps

4.3.2 Emergency stop

Check that the **Emergency stop** buttons are not pushed.

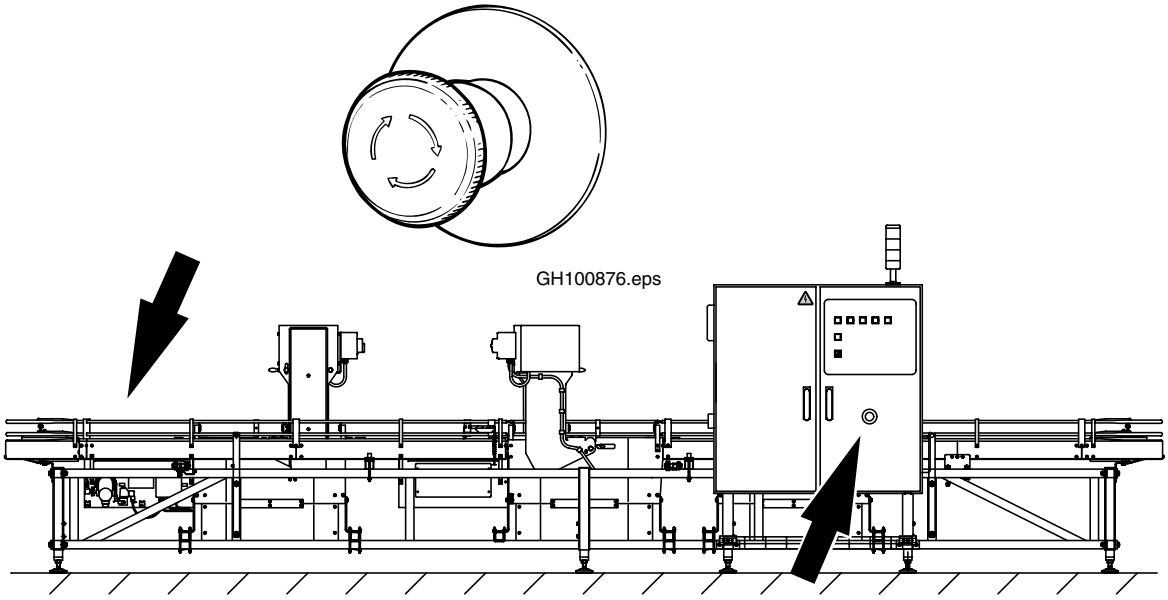

GH100876.eps

GH601443.eps

2.2TH601359en.fm

4.3.3 Doors

Check that the doors on the electrical cabinet are closed.

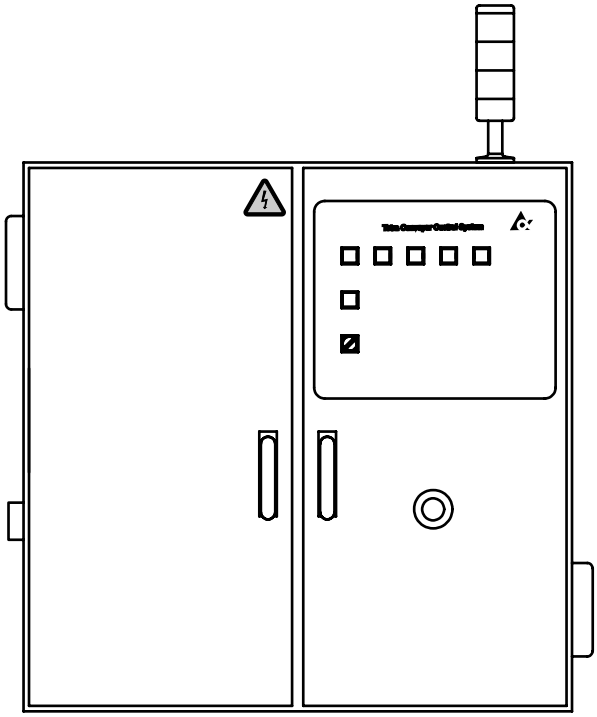

GH601448.eps

4.3.4 Lamps

Press the **Alarm reset / Lamp test** button and hold it in for two seconds. Check that all indicator lamps on the control panel light up.

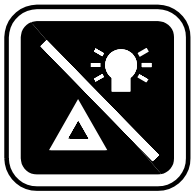

GH200004

4.3.5 Step up

Press the **Step up** button once.

Depending on the result, do the following:

a) If the **Step up** button starts flashing, then perform the action described in section **Start**, on 76

b) If the **Step up** button light is still out, then continue with next action.

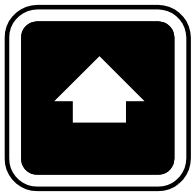

GH200008

4.3.6 Alarms

Alarm during production

Check the control panel of the electrical cabinet regularly.

When an alarm occurs, the corresponding indicator lamp on the control panel starts flashing. Refer to section 4.2 Control panel/Alarms on page 70 for further information about the different alarms.

2.2TH601359en.fm

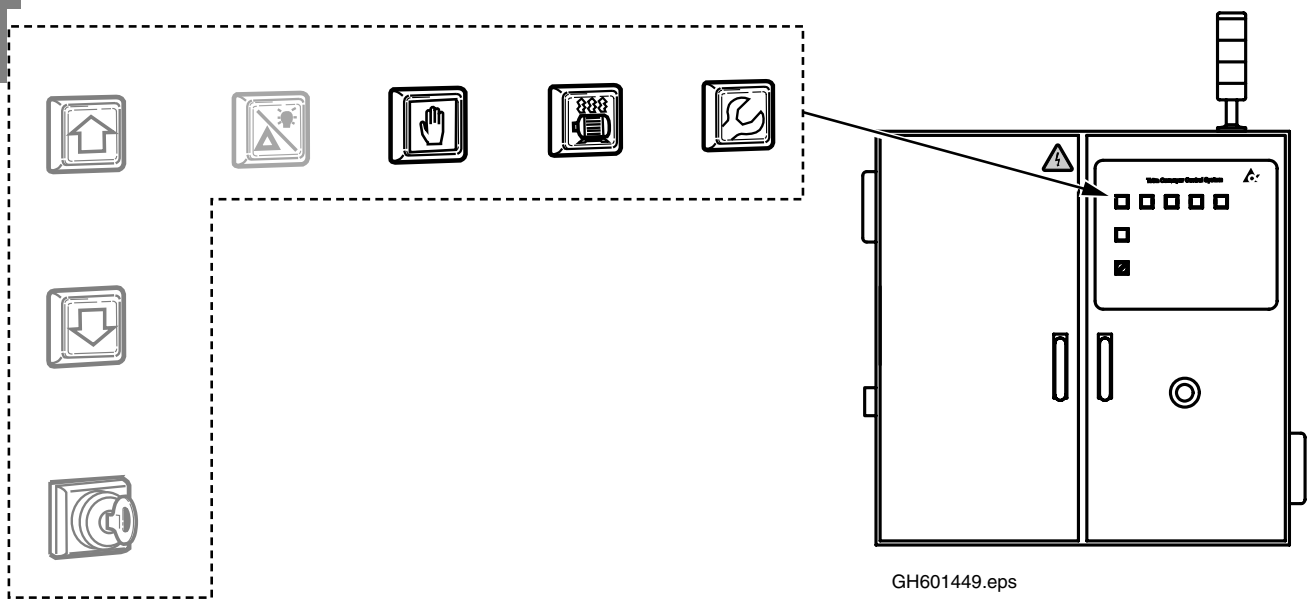

GH601449.eps

(Cont'd)

(Cont'd)

Corrective action

Take corrective action and press the **Alarm Reset/Lamp test** button.

When the alarm is acknowledged, the flashing light becomes fixed, and when the cause of the alarm is eliminated, the light will go out.

Result: The **Step up** button starts flashing.

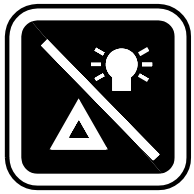

GH200004

2.2TH601359en.fm

4.4 Start

4.4.1 Production

Press the **Step up** button once.

Result: The **Step up** button light becomes fixed, that is, the Tetra Easy Ride Plus is started.

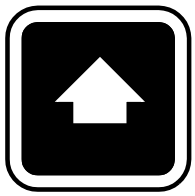

GH200008

4.5 Stop

There are two ways to stop the Tetra Easy Ride Plus:

- Emergency stop
- Normal stop

4.5.1 Emergency stop

a) Push emergency stop button or, alternatively, activate other emergency stop equipment

1. For more information about other emergency stop equipment, see header Emergency stop on page 18.

Result: The complete Tetra Easy Ride Plus will immediately stop and the **Emergency stop** alarm flashes.

Note! Do not reset the emergency button within 30 seconds after pressing it. This will create an overload alarm on frequency inverter, and pressing emergency stop again is necessary.

b) Fix the problem

Do the following: Eliminate the cause to the emergency stop

c) Reset the alarm

Then do one of the following:

a) Reset the **Emergency stop** button.

b) Reset other emergency stop equipment.

c) Acknowledge any alarm with the **Alarm reset / Lamp test** button.

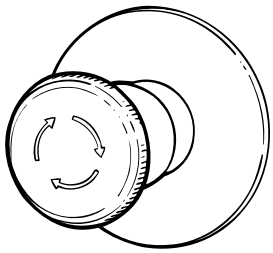

GH100876.eps

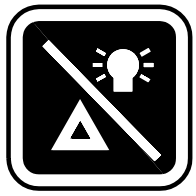

GH200004

(Cont'd)

2.2TH601359en.fm

(Cont'd)

d) Restart the equipment

Restart the Tetra Easy Ride Plus according to section **Start**.

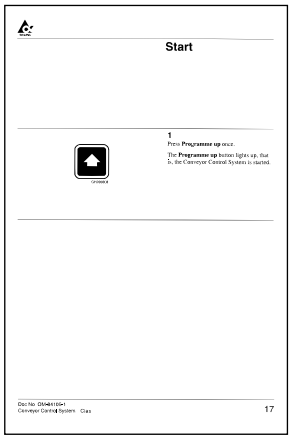

GH100764.eps

4.5.2 Normal stop

a) Stop the equipment

Press the **Step down** button once.

Result: The **Step down** button light becomes fixed and the complete Tetra Easy Ride Plus will stop

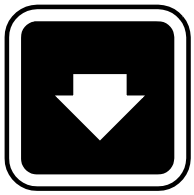

GH200007

5 Maintenance instructions

5.1 Adoption of the control system for the conveyor installation

5.1.1 General

The adoption of the control system contains of:

- Layout
- Setting “reference pulse”
- Setting conveyor speeds
- Setting “stop filler”

These settings are explained in Settings on page 87.

2.2TH601360en.fm

How to adjust the common settings by changing the constants in the PLC

a) Connect a portable PC to the PLC inside the electrical cabinet

b) Start the software “LM 90”

c) Choose “programmer package” (F1)

d) Select the correct program folder on the diskette

e) Select “program” in the menu (F2)

f) Use arrow keys to select custset

g) Zoom in block into subroutine custom settings using “F10”

h) Go to rung 0005 (see arrow No 1 in the figure below)

i) Type in the nickname ore use the “arrow keys” to select the constant in the “BLOCK MOVE” instructions that is to be changed (first is “IN 1” for layout 1--4, see arrow No 2 in the figure below)

j) Select another value on the constant according to pre-set values in the table (see columns in the table on next pages).
For example gives the constant “1” a setting of “17 Hz” etc.

k) Repeat the action (g) and (h) above to set the other values according to the figure on the top below.

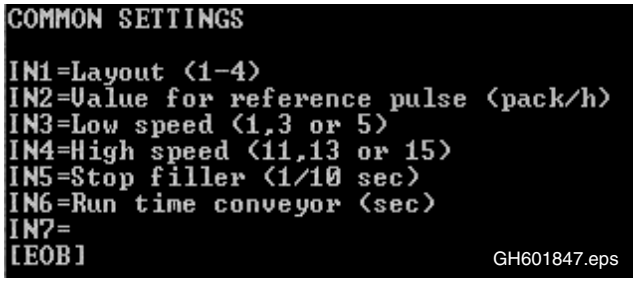

Put the cursor inside “comment” and zoom (F10) to get the information on the left.

2.2TH601360en.fm

1. Layout

Programs and electrical cabinets are prepared for four different layouts (see picture below). To achieve the right program function each program has to be configured for the actual layout. There are four different layouts available in the PLC, 1-4.

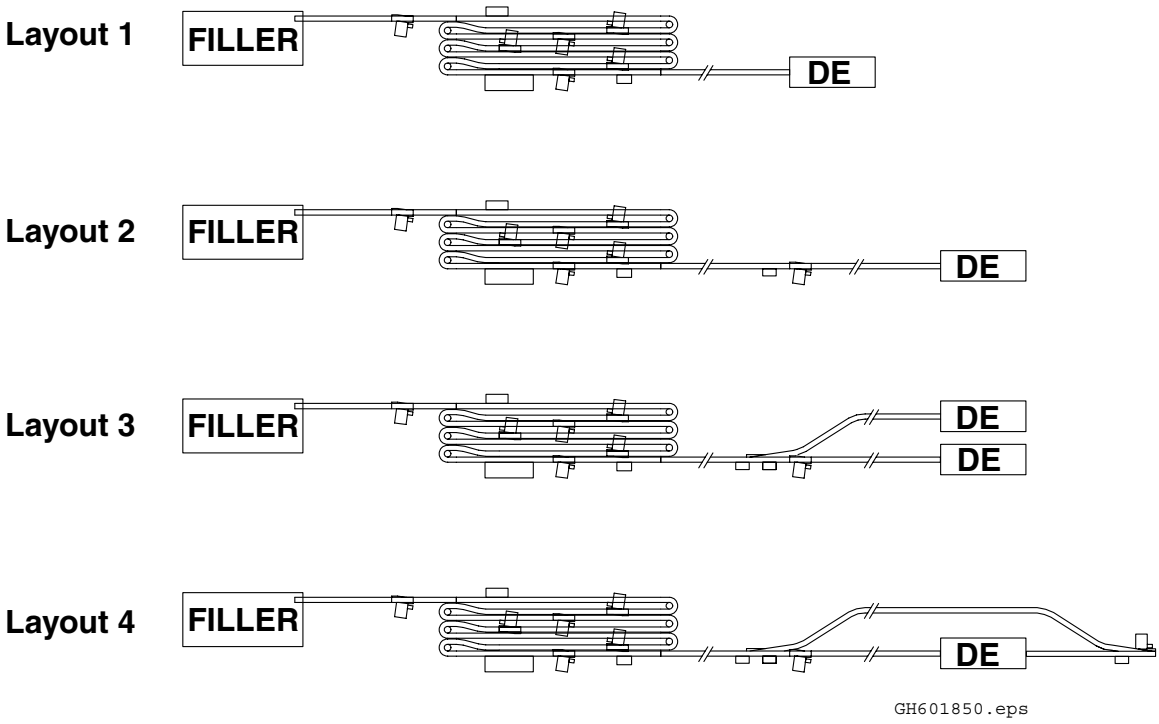

2.2TH601360en.fm

How to set layout

a) Start with doing the actions (a-f) under (How to adjust the common settings by changing the constants in the PLC) on page 81.

b) Go to rung 0005 (see arrow No 1 on page 81)

Select another value (the value on the constant = the actual layout) on the constant (see arrow No 2 on page 81) in the “BLOCK MOVE” instructions

2. Reference pulse

The purpose of the “Reference pulse” is to control the package flow to the distribution machines. By calculating the speed of the distribution machine with the lowest capacity and using this as a reference, the speed is set for the whole conveyor installation.

Note! This is only seen at accumulation on more than one conveyor section.

To low “Reference pulse” will lead to low capacity on the conveyor installation. Typical for low “Reference pulse” is that the infeed photocells on the lowest capacity distribution machine not are covered all the time during emptying off accumulation and that the distribution machine occasionally waits for packages.
To high “Reference pulse” leads to exceeded queue pressure and will make the hose brake work constantly.

How to set Reference pulse

a) Start with doing the actions (a-f) under (How to adjust the common settings by changing the constants in the PLC) on page 81.

b) Go to rung 0005 (see arrow No 1 in the figure below)

c) Select another value (higher value on the constant = higher "Reference pulse") on the constant (see arrow No 2 in the figure below) in the "BLOCK MOVE" instructions.

3. Conveyor speeds

The goal when setting the standard speeds correctly are:

- maximal accumulation
- stable packages

There are two different standard speeds which we call:

- Low speed (three different)
- High speed (three different)

The speed is adjustable according to package size and capacity of filling machine.

Note! Always start with adjusting "Low speed". Then continue by adjusting "high speed".

How to set the standard conveyor speeds

The normal way to set the standard speeds are by changing the constants in the PLC-program. In some cases (depending on package size, filling machine capacity, layout etc.) the possibilities to set the conveyor speed by changing the PLC-program, is not enough to make an optimal speed setting. Then it is necessary to change the pre-set settings in the frequency inverters to make an optimal speed setting.

Note! It is strongly recommended to do the adjustments of the conveyor speed by adjusting the PLC-program in first hand. Changing the frequency settings should always be a last alternative.

Speed

The table below shows how the different constants in the PLC affects the frequency converter settings.

Constant in PLC	Settings (Hz)	Selected parameter	Function
Low speed			
1	17	n11	Frequency reference 1 Note! If n11 is to be increased over max.frequency (n24), start with increasing the max frequency n24.
3	20	n12	Frequency reference 2
5	23	n13	Frequency reference 3
High speed			
11	60	n16	Frequency reference 6
13	75	n17	Frequency reference 7
15	85	n18	Frequency reference 8

Table on pre-set speeds.

How to adjust the conveyor speed by changing the settings in the frequency inverters

Depending on the constants (start in Rung 0005) change the parameter setting corresponding to the constant so that the correct setting is achieved. Follow the instructions in 5.3.2-2 Frequency converter - set on page 114 to change settings.

2.2TH601360en.fm

How to set low speed

a) Run production with the “key switch” (for location see page 66) on the electrical cabinet in normal position AUT.

b) Simulate a production stop by steeping down a distribution machine.

The accumulation will start from the distribution machine and back, that is the opposite of the package flow, see 3.2.4 Installation example on page 32. When the packages passes the gap between the conveyor sections the distance should be according to (L_7) (see the figure below).

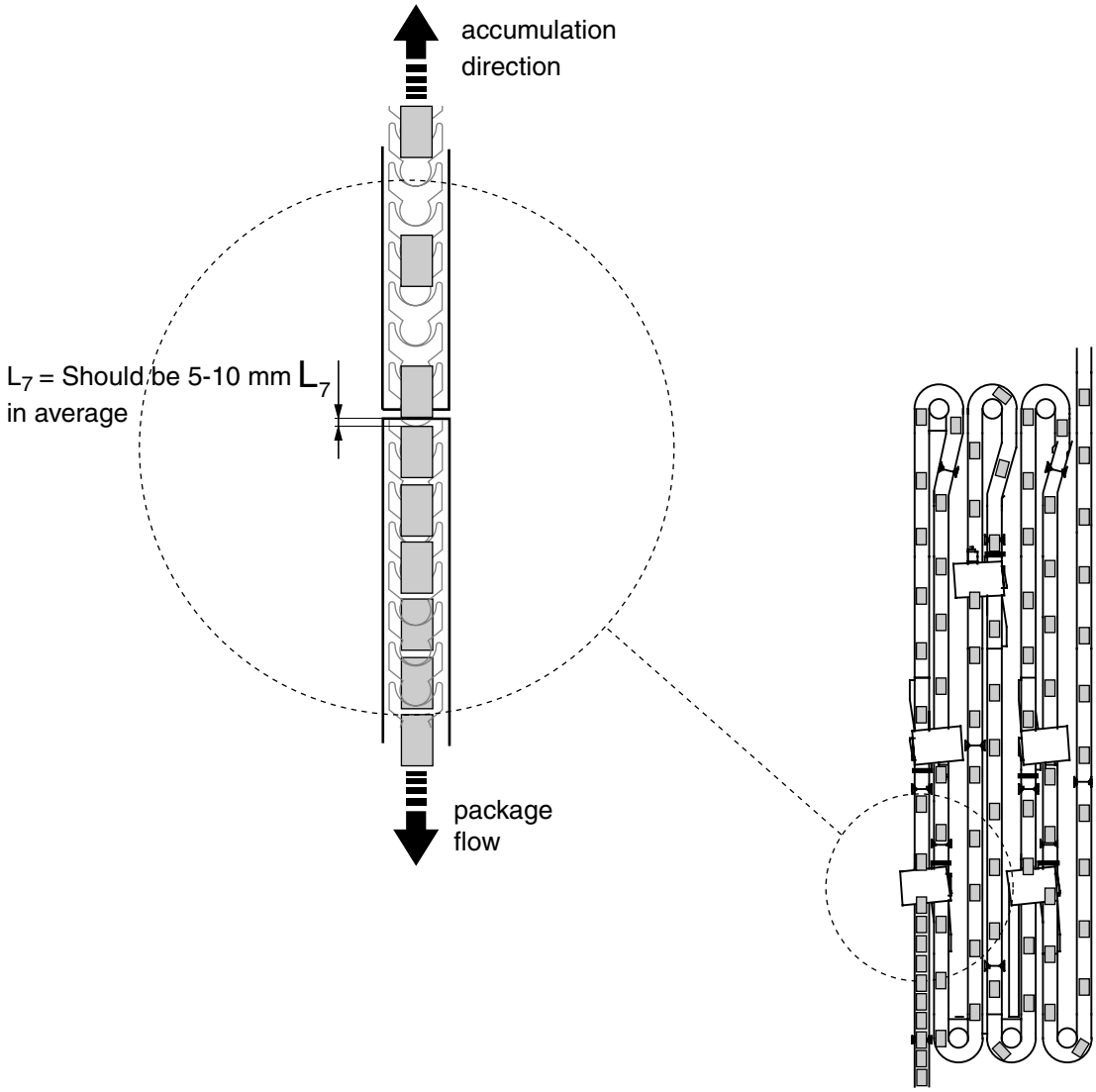

GH601838.eps

How to set high speed

To achieve maximal accumulation time, the **high speed** shall be set as high as possible without the packages getting unstable in the transport.

2.2TH601360en.fm

4. Stop filler

The purpose of the “TDSF” is to control when to stop the filling machine. It shall be set so that the filling machine could emptying in a correct way. When the Tetra Easy Ride Plus is full, it gives a “stop signal” to the filling machine.

How to set Stop filler

a) Start with doing the actions (a-f) under (How to adjust the common settings by changing the constants in the PLC) on page 81.

b) Go to rung 0005.

Select another value (higher value on the constant = higher “timer delay”) on the constant (see arrow No 2 in the figure below) in the “BLOCK MOVE” instructions.

(Cont'd)

2.2TH601360en.fm

Settings

These settings shows the actual basic according to filling machine and package types, fine tuning can be made:

Filling Machine TBA/19

Package	REF.V	L.S*	H.S	T.D.S.F	L.S.DE	L.S.REF	S.QUE 1	R.S	S.QUE 2
TBA 200 B	9300	1(17)	15(85)	200	10	35	10	2	15
TBA 200 S	9300	1(17)	11(60)	150	10	35	30	2	30
TBA 200 Sq	9300	1(17)	13(75)	200	10	35	15	2	20
TBA 200 M	9300	1(17)	13(75)	200	10	35	10	2	15
TBA 250 B	9300	3(20)	15(85)	200	10	35	30	2	30
TBA 250 S	9300	1(17)	13(75)	200	10	35	10	2	15
TPA 250 Sq	7200	1(17)	11(60)	150	5	35	20	2	25
TBA 284 B	9300	3(20)	15(85)	200	10	35	30	2	30
TBA 300 S	9300	3(20)	15(85)	200	10	35	30	2	30
TBA 330 S	9300	3(20)	13(75)	200	10	35	15	2	20
TPA 330 Sq	7200	1(17)	13(75)	200	10	35	30	2	30

Filling Machine TBA/21

Package	REF.V	L.S*	H.S	T.D.S.F	L.S.DE	L.S.REF	S.QUE 1	R.S	S.QUE 2
TBA 200 B	9700	3(20)	15(85)	200	10	35	25	2	30
TBA 200 S	9700	1(17)	11(60)	200	10	35	25	2	30
TBA 250 B	9700	3(20)	15(85)	200	10	35	25	2	30
TBA 250 S	9700	1(17)	13(75)	200	10	35	10	2	15
TBA 1000 B	8500	5(23)	15(85)	200	10	35	10	2	15
TBA 1000 S	8500	5(23)	13(75)	200	10	35	10	2	15
TBA 1000 Sq	8500	5(23)	13(75)	100	10	35	15	2	20
TPA 1000 S	8500	5(23)	13(75)	200	5	35	10	2	15
TPA 1000 Sq	8500	5(23)	13(75)	100	5	35	10	2	15

Filling Machine TB/21

Package	REF.V	L.S*	H.S	T.D.S.F	L.S.DE	L.S.REF	S.QUE 1	R.S	S.QUE 2
TB 1000 Sq	8400	5(23)	13(75)	200	10	35	25	2	30

* 1(17) = 1 is the constant and (17) is Hertz

(Cont'd)

(Cont'd)

Filling Machine TBA/8

Package	REF.V	L.S*	H.S	T.D.S.F	L.S.DE	L.S.REF	S.QUE 1	R.S	S.QUE 2
TBA 355 B	7200	1(17)	15(85)	200	10	35	30	2	30
TBA 375 S	7200	1(17)	13(75)	200	10	35	30	2	30
TBA 500 B	7200	3(20)	15(85)	200	10	35	10	2	15
TBA 500 S	7200	1(17)	15(85)	200	10	35	10	2	15
TBA 750 B	7200	5(23)	15(85)	200	10	35	20	2	25
TBA 750 S	7200	3(20)	13(75)	200	10	35	10	2	15
TBA 1000 B	7200	5(23)	15(85)	200	10	35	20	2	25
TBA 1000 S	7200	3(20)	13(75)	200	10	35	10	2	15
TBA 1000 Sq	6600	1(17)	13(75)	150	10	35	15	2	20
TBA 1500 S	6000	1(17)	13(75)	150	10	35	10	2	15

* 1(17) = 1 is the constant and (17) is Hertz

Technical terms
Subroutine custom settings

Block move common settings	
REF.V	Value reference pulse (pack/h) See 2. Reference pulse on page 82
L.S	Low speed (1,3 or 5) See 3. Conveyor speeds on page 83
H.S	High speed (11,13 or 15) See 3. Conveyor speeds on page 83
T.D.S.F	Timer delay stop filler See 4. Stop filler on page 86
Block move timer settings	
L.S.DE	Low speed condition from DE
L.S.REF	Low speed condition from reference pulse photocell
S.QUE 1	Delay stop motor from queue photocell (motor closest to DE)
R.S	Delay restart motor
S.QUE 2	Delay stop motor from queue photocell (other motors)

2.2TH601360en.fm

5

Customer settings

Common settings (date)	
REF.V	
L.S	
H.S	
D.S.S	
Timer settings	
L.S.DE	
L.S.REF	
S.QUE 1	
R.S	
S.QUE 2	

Common settings (date)	
REF.V	
L.S	
H.S	
D.S.S	
Timer settings	
L.S.DE	
L.S.REF	
S.QUE 1	
R.S	
S.QUE 2	

Common settings (date)	
REF.V	
L.S	
H.S	
D.S.S	
Timer settings	
L.S.DE	
L.S.REF	
S.QUE 1	
R.S	
S.QUE 2	

2.2TH601360en.fm

5.2 Mechanical equipment

5.2.1 Glide Curves

5.2.1-1 Glide curves - check

Machine status	Main power OFF
Period	3 months operating time

Check the wear of the upper edge guide (1).
The thickness of the edge guide shall not be less than 7 mm. The measure shall be where the screws (2) are placed.

5.2.1-2 Glide curves - replace parts

Machine status	Main power OFF

Before doing any service work, loosen the tension of the conveyor chain. Remove the chain if necessary.

To replace the upper edge guide (1), perform the following steps:

a) Remove the two screws (2).

b) Replace the edge guide and tighten the screws.

1 Edge guide
2 Screw

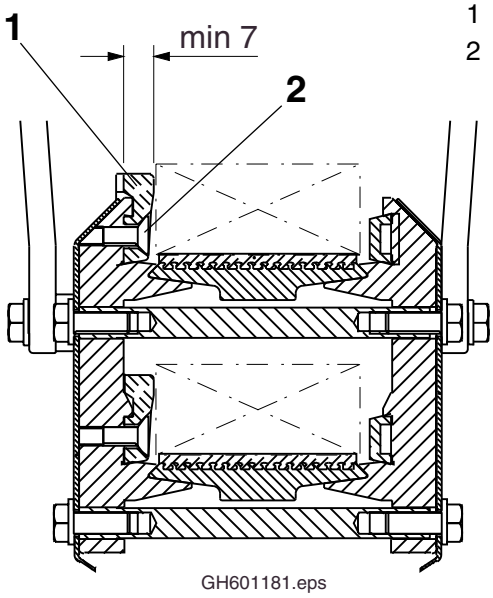

GH601181.eps

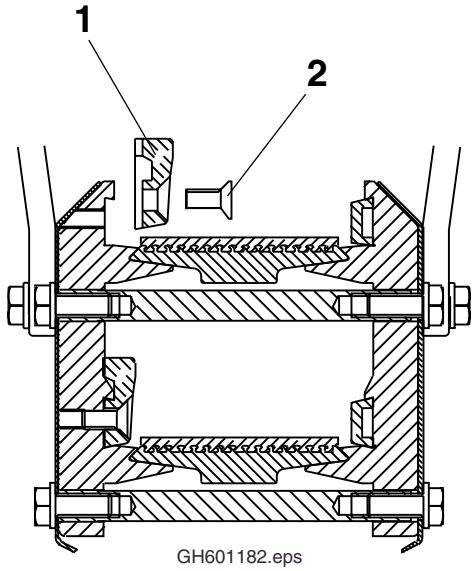

GH601182.eps

2.2TH601360en.fm

5

5.2.2 Wheel Curves

5.2.2-1 Wheel curves - lubrication

Period	1 month operating time

When lubricating, perform the following steps:

a) Remove the plastic cover (1).

b) Add oil up to the edge and put the cover back.

5.2.2-2 Wheel curves - check

Machine status	Main power OFF
Period	3 months operating time

Check the play bushing/shaft of the wheels (2). The play shall not exceed 1 mm.

1 Plastic cover
2 Wheel

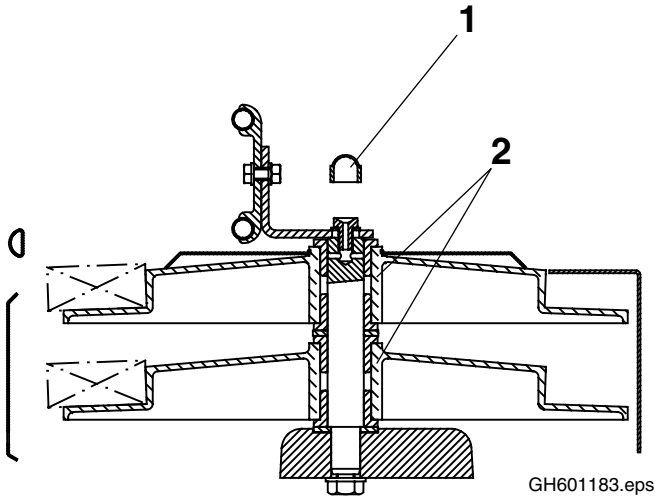

2.2TH601360en.fm

5

(Cont'd)

5.2.2-3 Wheel curves - replace parts

Machine status	Main power OFF

Before doing any service work, loosen the tension of the conveyor chain. Remove the chain if necessary.

To replace bushings (3), perform the following steps:

a) Remove the four screws with washers (4) and remove the cover (5).

b) Remove the plastic cover (1) and the screw with washer (6).

c) Remove the rails (7) and holder (8). See Installation instructions how to disassemble and assemble the rails.

d) Remove the wheels (2) and knock out the bushing (3).

e) Replace the bushings and assemble the unit in reverse order.

1 Plastic cover
2 Wheel
3 Bushing
4 Screw / Washer
5 Cover
6 Screw / Washer
7 Rail
8 Holder

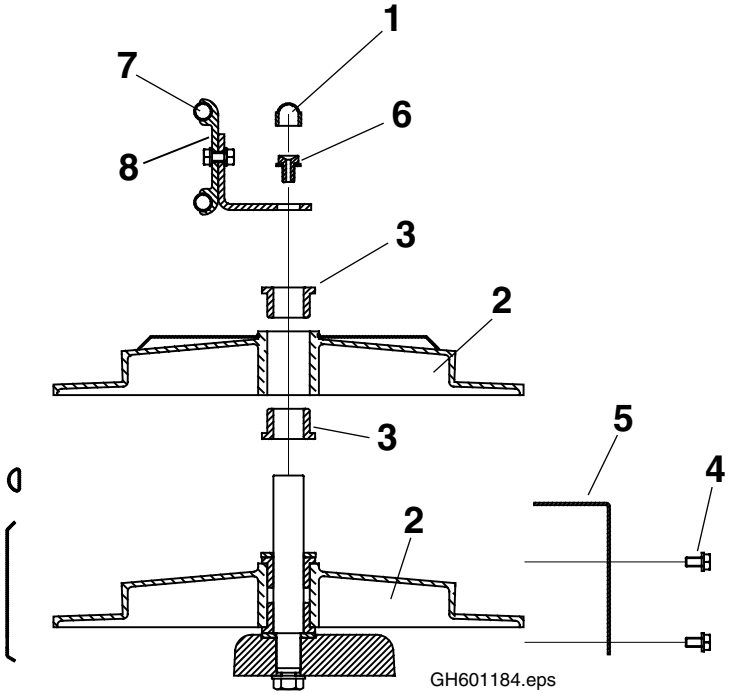

2.2TH601360en.fm

5

5.2.4 Drive and End Unit

SPC	1359136-0300

WARNING! **Risk of personal injuries!**
When tilting the motor unit make sure that the hatch is in correct position before doing any service work..

1 Correct position for the safety hatch
2 Motor unit in tilted position

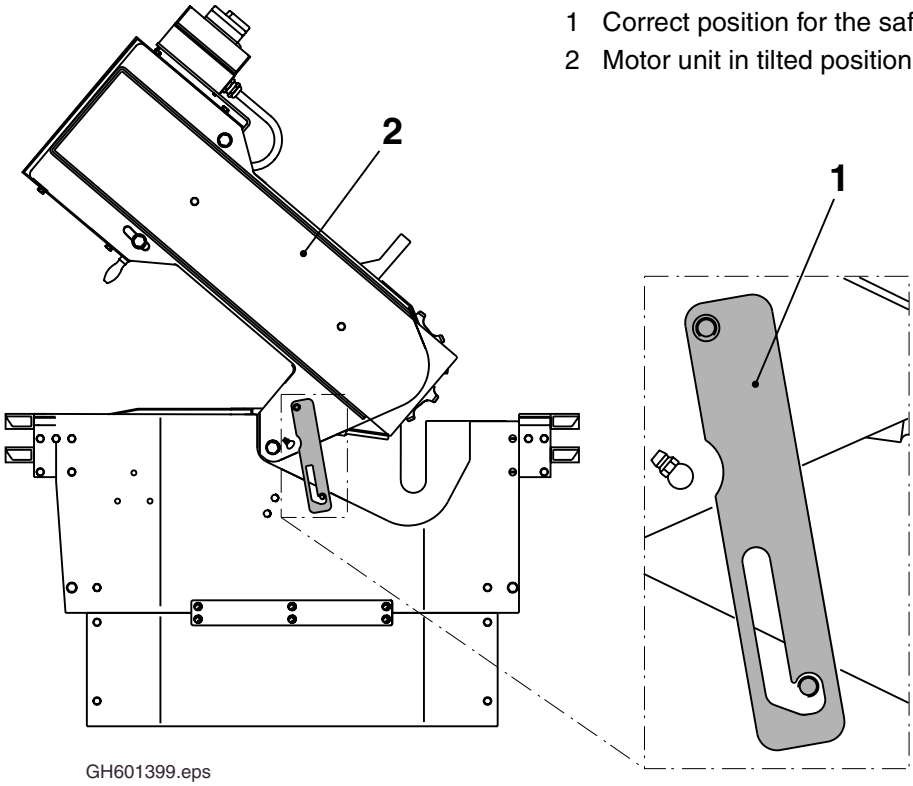

2.2TH601360en.fm

5.2.4-1 Cleaning

Machine status	Motor switch OFF
Period	8 - 16 hours operating time

When cleaning the unit use Tetra Pak approved detergent and rinse thoroughly with water.
The following table contains examples of detergent to be used when cleaning the unit.

Formulated products	
Henkel	P3-mip FPC
	P3-FPC
Leverindus	SU 118
Diversey	DSY 12

5

5.2.4-2 Check

Machine status	Motor switch OFF
Machine status	Through going conveyor chains switch OFF
Period	6 months operating time

Check the following:

- Chain level.
  When a package is passing from one chain to another, the chain as the package is leaving should be in the highest position of the two parallel running chains. The difference shall be 0 - 1 mm.
  If necessary, loosen the screws (3), adjust the height of the slide rail (4) and tighten the screws.

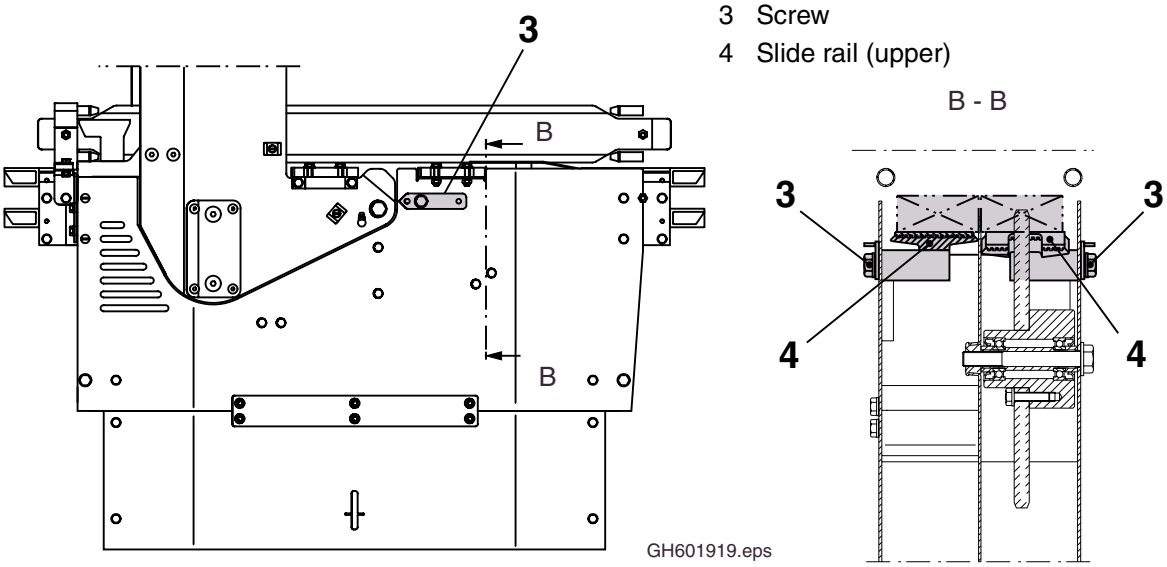

3 Screw
4 Slide rail (upper)

- The gap between the in- and outfeed chain (7) and (8).
  The gap shall be as small as possible.
  To adjust the gap loosen the screws (5) and push the chains together with the steering rails (6), tighten the screws (5).

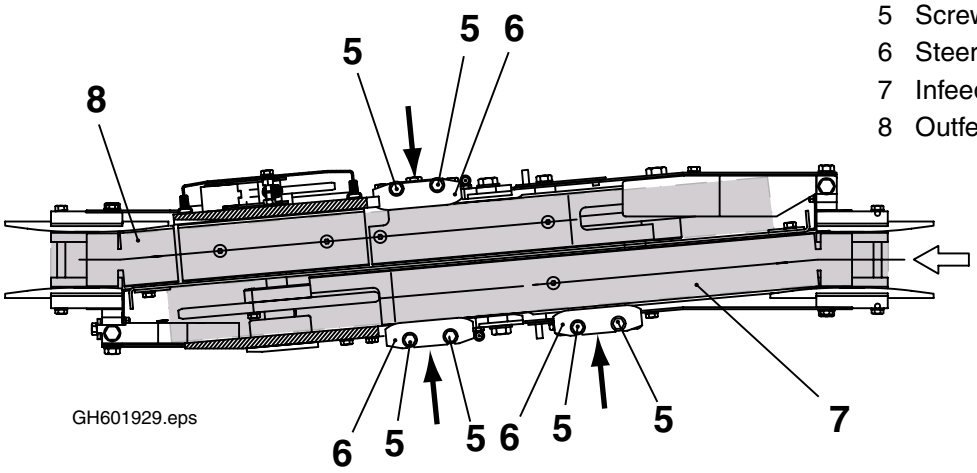

5 Screws M6
6 Steering rails
7 Infeed chain
8 Outfeed chain

(Cont'd)

(Cont'd)

- The length of the infeed conveyor chain.
  The conveyor chain shall be as short as possible but never pre-tensioned. When the conveyor chain is below the dashed line it is time to remove some links.

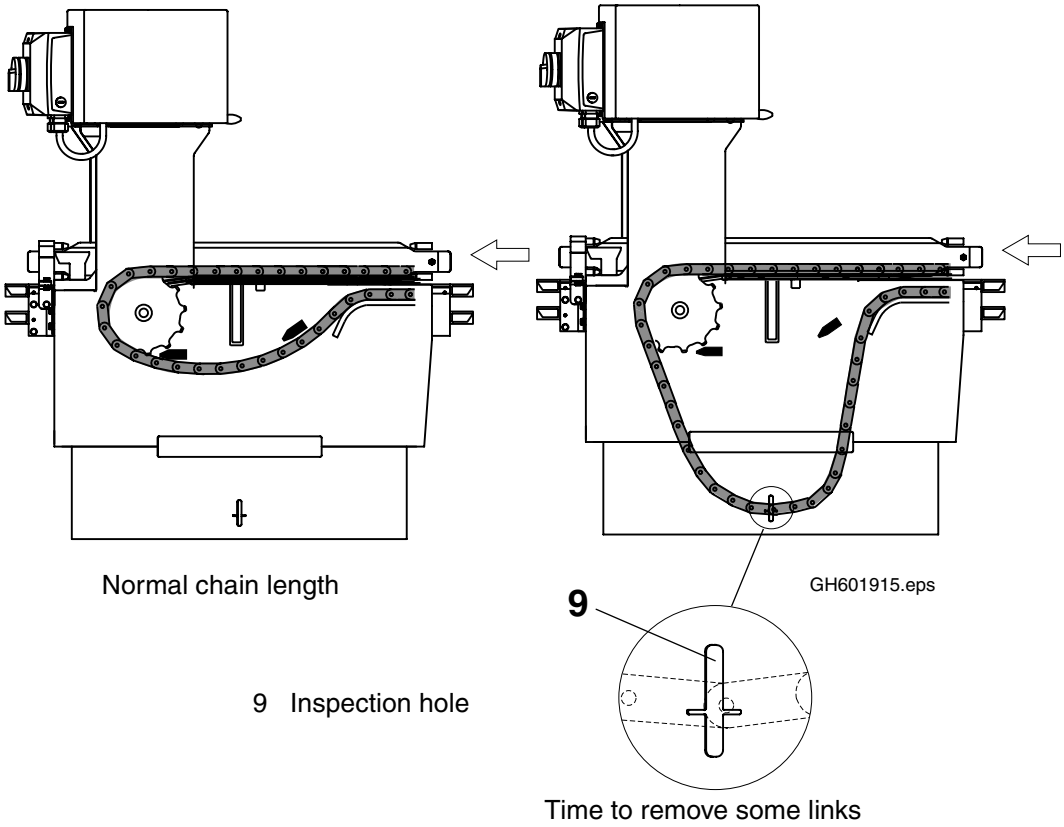

2.2TH601360en.fm

5

Note! Do never pre-tension the infeed chain.

The chain shall be as short as possible but never stretched.

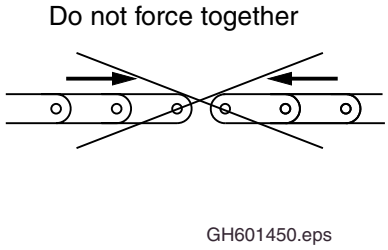

(Cont'd)

(Cont'd)

Divide the conveyor chains. Remove the chains if necessary.

Remove the rails and the screw / washer (11) and tilt the motor unit. Secure the motor unit in the tilted position with the hatch.

Check the following:

- Upper slide rail (10) and lower slide rail (11).
  The wear of the rails must not exceed the limit when the chain starts to glide directly against the aluminium core.
- Sprockets (13) and (14).
  Check the play of the ball bearing (15) and hub (16). Check the play wheel / shaft of the guide sprocket (17). The play shall not exceed 1 mm.
- Motor
  Remove the motor cover (18), fitted with four screws (19). Check the condition of the bearings. Use a motor stethoscope

Assemble the unit in reverse order.

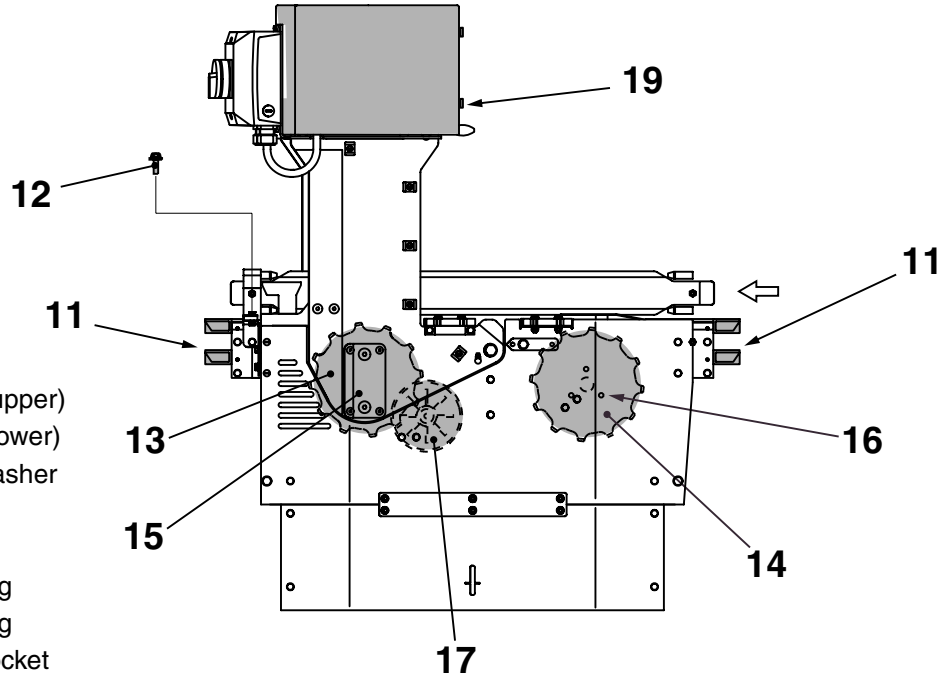

10 Slide rail (upper)
11 Slide rail (lower)
12 Screw / Washer
13 Sprocket
14 Sprocket
15 Ball bearing
16 Ball bearing
17 Guide sprocket
18 Motor cover
19 Screw

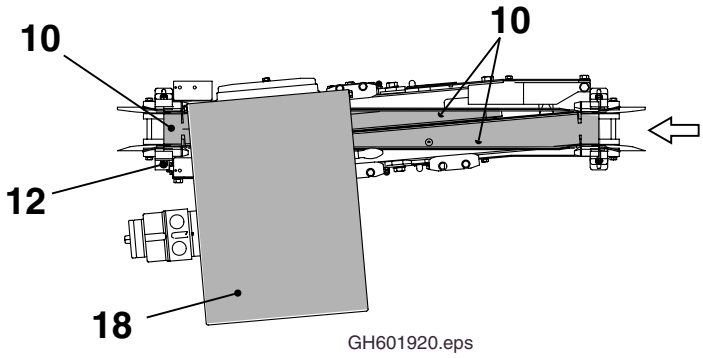

2.2TH601360en.fm

(Cont'd)

(Cont'd)

- That there is a play between conveyor chain (20) and plate (21).
  To adjust the play, loosen the screws (22) and (23) push the motor unit sideways to adjust the gap . When the gap is 0 < 1 mm, tighten the top screw (22) and then the screws (23).
- That the plate is set below the chain.
  To adjust the height of the plate, loosen the screws (24) and adjust the height to 0 < -1mm. Tighten the screws.

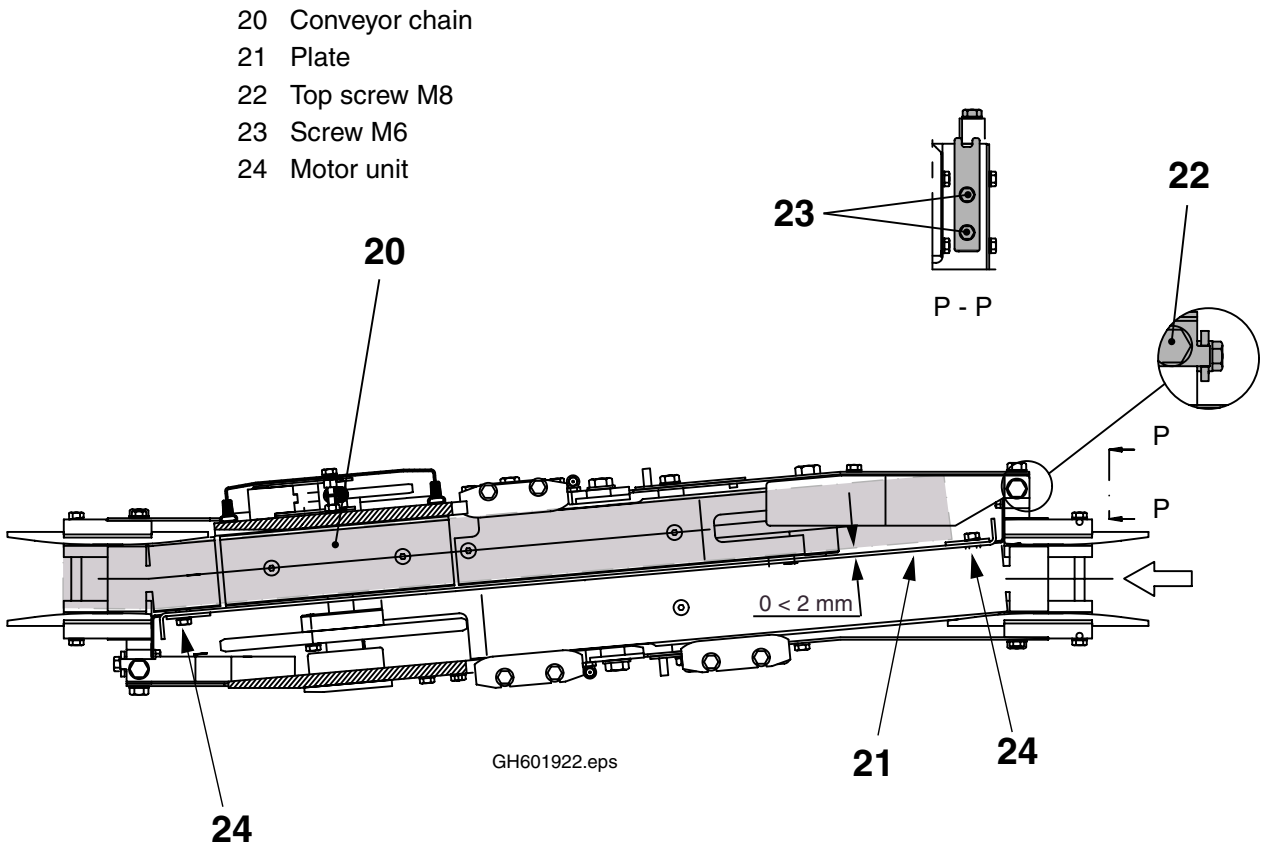

2.2TH601360en.fm

5

(Cont'd)

(Cont'd)

Remove the two screws (25) and the cover (26) and check the following:

- The condition of the two chain wheels (27) and the roller chain (28).
- That the roller chain is well greased. Use BP Energrease LS EP 2 or equivalent quality of another manufacture.
- That the two bearings (29) are filled with grease, if not fill them from the two lubricating points (30). Use BP Energrease LS EP 2 or equivalent quality of another manufacture.

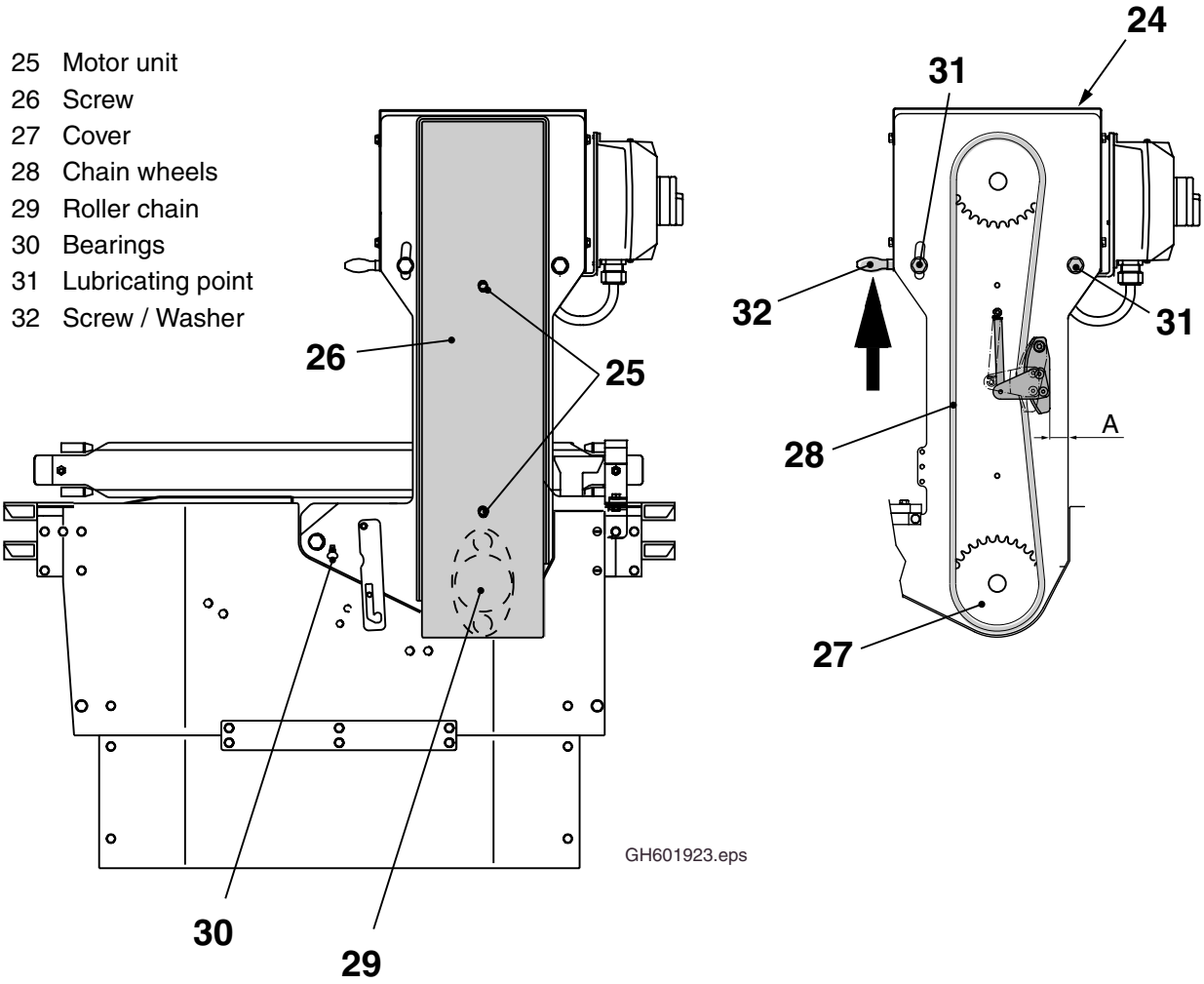

(Cont'd)

(Cont'd)

- The tension of the roller chain (28).
  Measure A shall be 25 - 45 mm.

If necessary adjust the tension of the roller chain by performing the following steps:

a) Loosen the four screws (31).

b) Adjust the tension of the roller chain (28) by lifting the motor unit (24) with the handle (32). Measure A shall be approx. 25 mm.

c) Tighten the four screws (31).

d) Reassemble the cover.

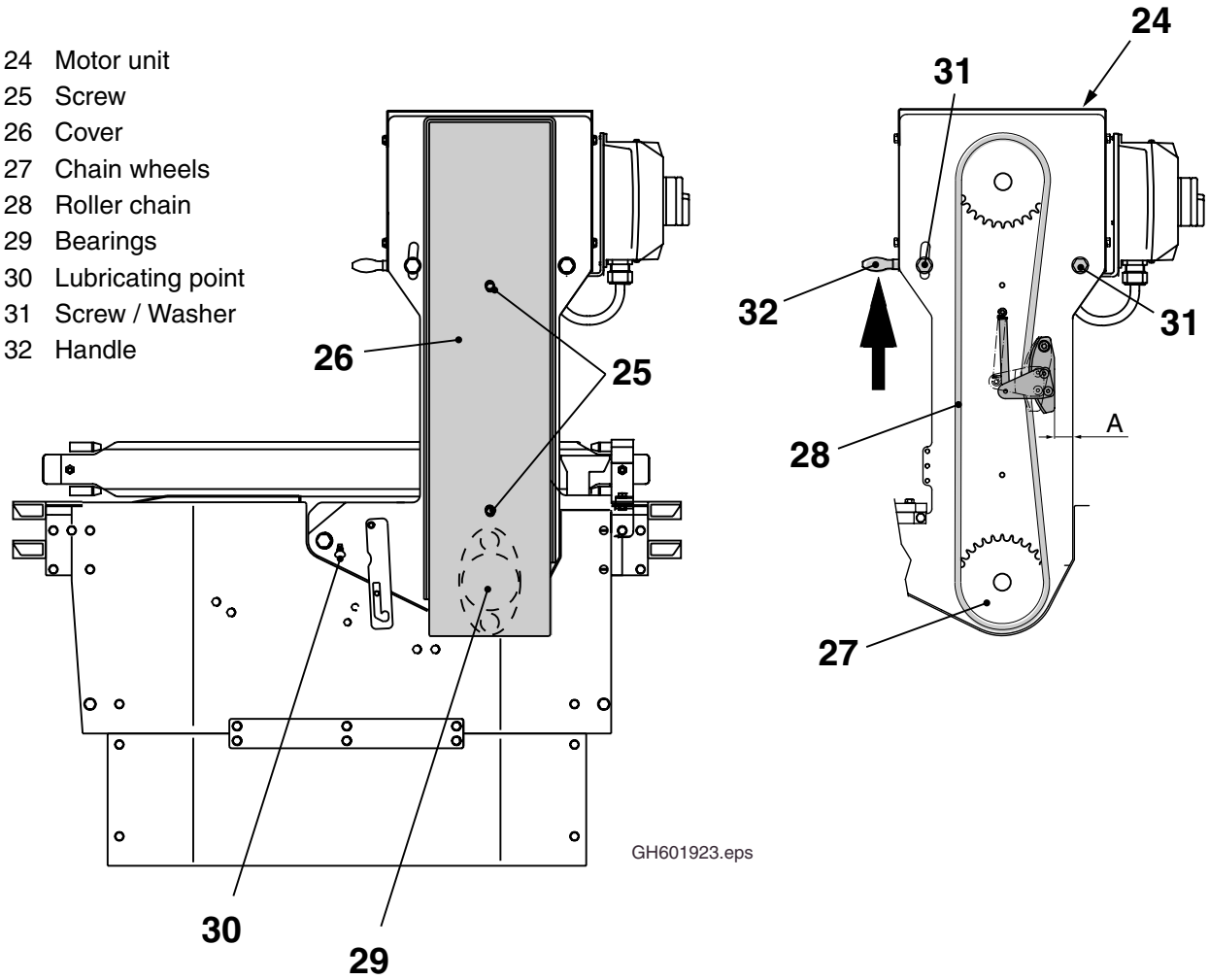

2.2TH601360en.fm

5

5.2.4-3 Change of oil

Machine status	**Motor switch OFF**
Machine status	**Through going conveyor chains switch OFF**
Period	**10 000 hours operating time**

Change the oil. Use BP GRXP 220 or equivalent quality of another manufacture. Volume 0.25 liters.

5.2.4-4 Replace parts

Machine status	**Main switch OFF**
Machine status	**Through going conveyor chains switch OFF**

WARNING! **Risk of personal injuries!**
When tilting the motor unit make sure that the hatch is in correct position before doing any service work.

1 Correct position for the safety hatch
2 Motor unit in tilted position

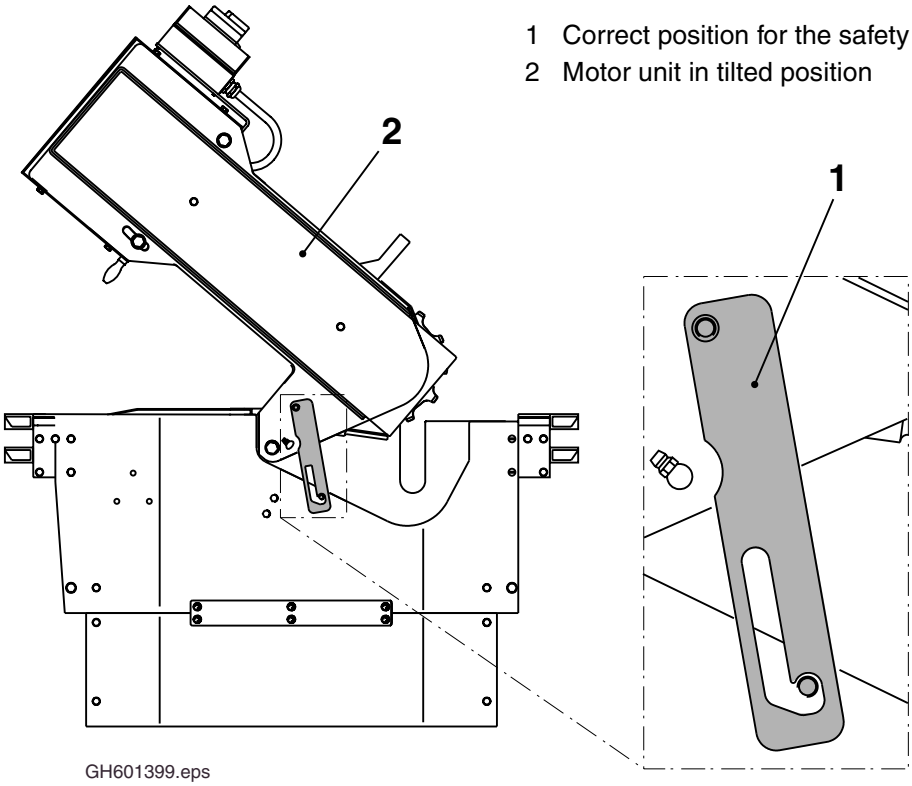

GH601399.eps

2.2TH601360en.fm

(Cont'd)

(Cont'd)

Divide the conveyor chains, remove the chains if necessary.

Sprockets / hub (end unit)

To replace sprocket (4) and/or hub (6) perform following:

a) Remove the screw / washer (9) to undo the sprocket and the ball bearings.

b) Replace the sprocket and/or the hub

c) Assemble the unit in reverse order

Guide sprocket

To replace guide sprocket (8) perform following:

a) Remove the rails and the screw / washer (3) and tilt the motor unit. Secure the motor unit in the tilted position with the hatch.

b) Remove the screw / washer (10) to undo the guide sprocket.

c) Replace the guide sprocket.

d) Assemble the unit in reverse order.

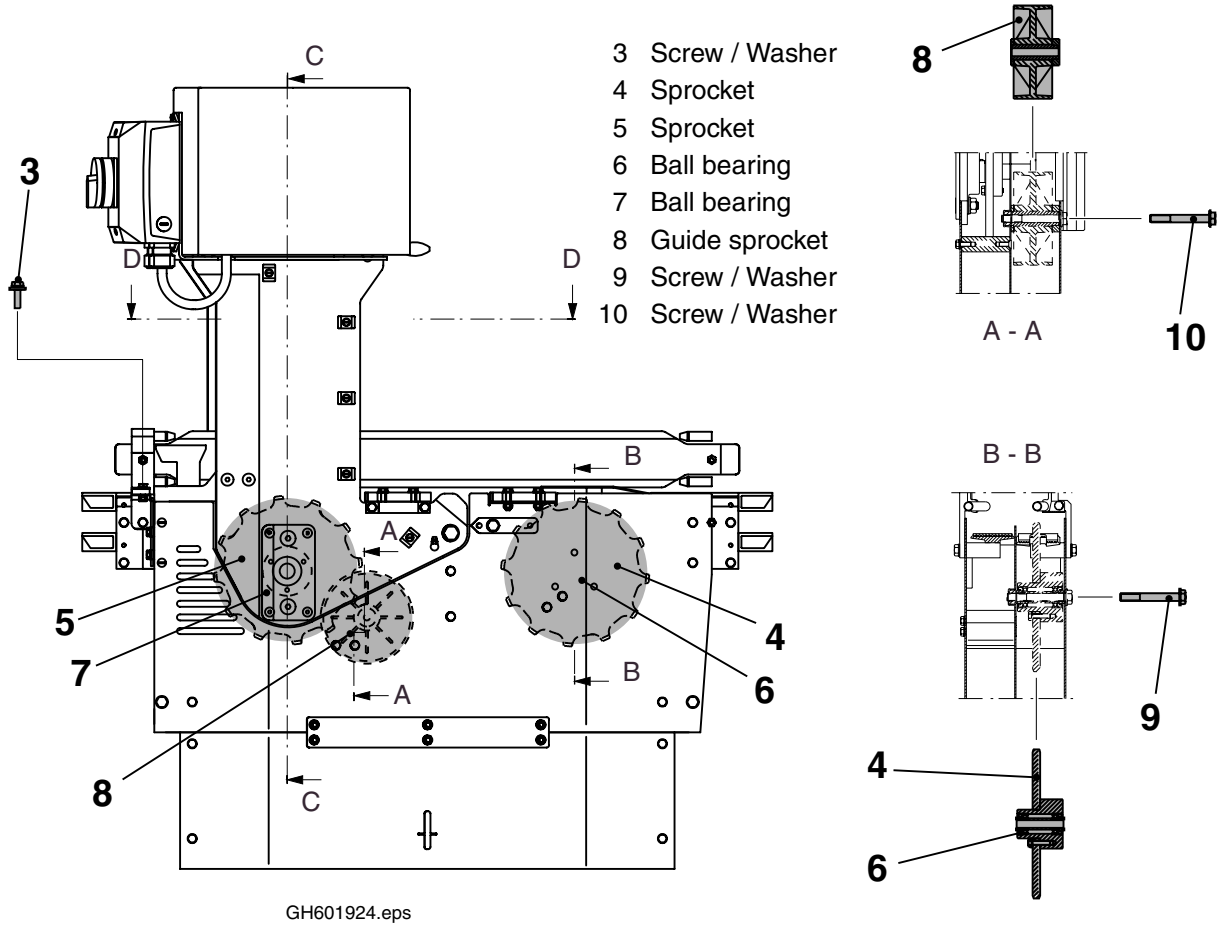

2.2TH601360en.fm

(Cont'd)

(Cont'd)

Sprockets / ball bearings (drive unit)

To replace sprocket (5) and/or the ball bearings (7), perform the following steps:

a) Remove the cover (13) fitted with two screws (12).

b) Loosen the tension of the roller chain by lower the motor unit (11) and remove the roller chain.

c) Loosen the five stop screws (14).

d) To facility the replacement, remove the plate (15) fitted with four screws and knock out the shaft (16).

e) Remove the hub which are fitted with four screws / washers / nuts (17), remove the lubricating hoses from the hub.

f) Replace the sprocket and/or the hub.

g) Assemble the unit in reverse order.

h) To avoid unnecessary noise and wear, make sure that there is a clearance between conveyor chain and plate, see page 97.

5 Sprocket
7 Ball bearing
11 Motor unit
12 Screw
13 Cover
14 Stop screw
15 Plate
16 Shaft
17 Screw / Washer / Nut

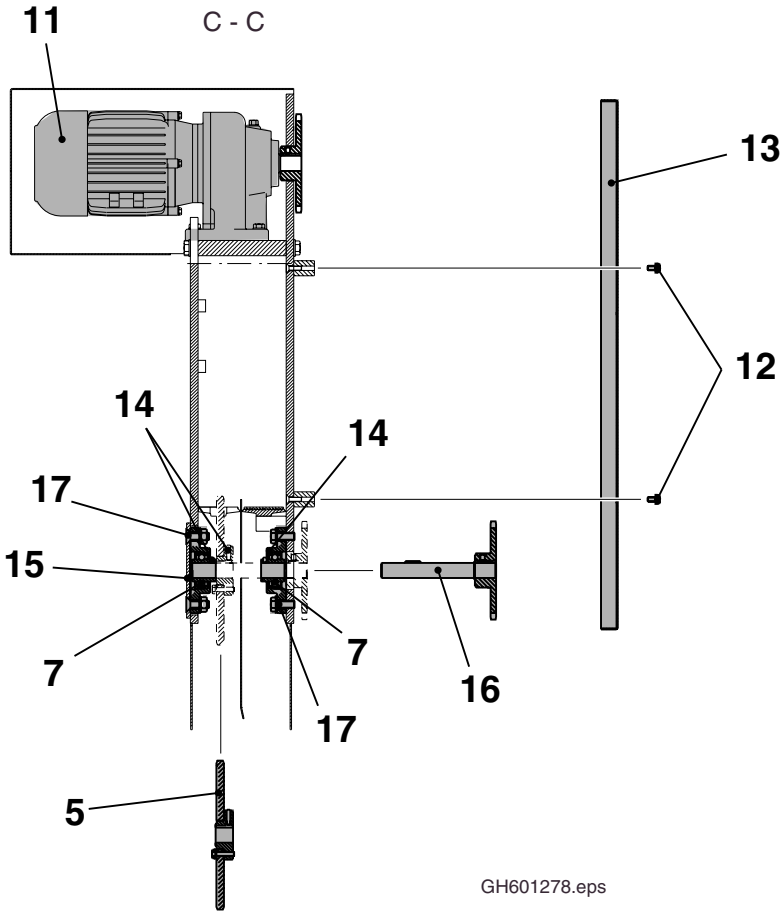

2.2TH601360en.fm

(Cont'd)

(Cont'd)

Chain wheels / roller chain

To replace chain wheels (22) and/or roller chain, perform the following steps:

a) Remove the cover (13) fitted with two screws (12).

b) Loosen the tension of the roller chain by lower the motor unit (11) and remove the roller chain.

c) Loosen the stop screw (23).

d) Replace the chain wheels and/or the roller chain.

e) Reassemble the cover.

11 Motor unit
12 Screw
13 Cover
18 Chain wheels
19 Stop screw

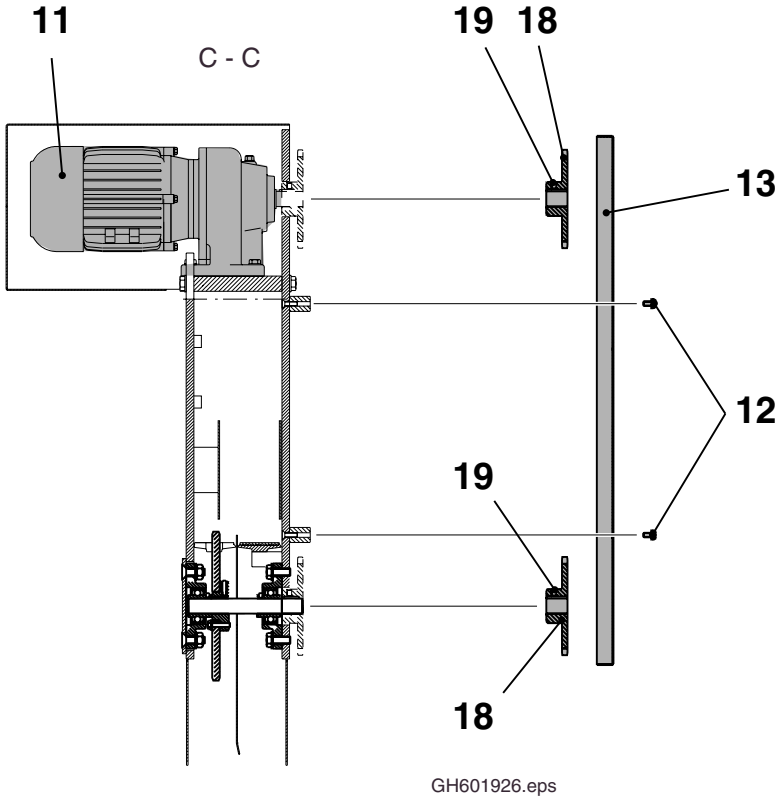

2.2TH601360en.fm

5

(Cont'd)

(Cont'd)

Slide rails

To replace upper slide rail (20) and lower slide rail (21), perform the following steps:

a) Loosen the 12 screws (22).

b) Remove the five screws (23) and replace the upper (20) and lower (21) slide rails, assemble the unit in reverse order.

c) Check that the slide rails on the outfeed are in same level, adjust by loosen and tighten the two screws (24).

When a package is passing from one chain to another, the chain as the package is leaving should be in the highest position of the two parallel running chains. The difference shall be 0 - 1 mm.
If necessary, loosen the screws (24, adjust the height of the two parallel slide rails (20) and tighten the screws.

20 Slide rail (upper)
21 Slide rail (lower)
22 Screw M6
23 Screw
24 Screw

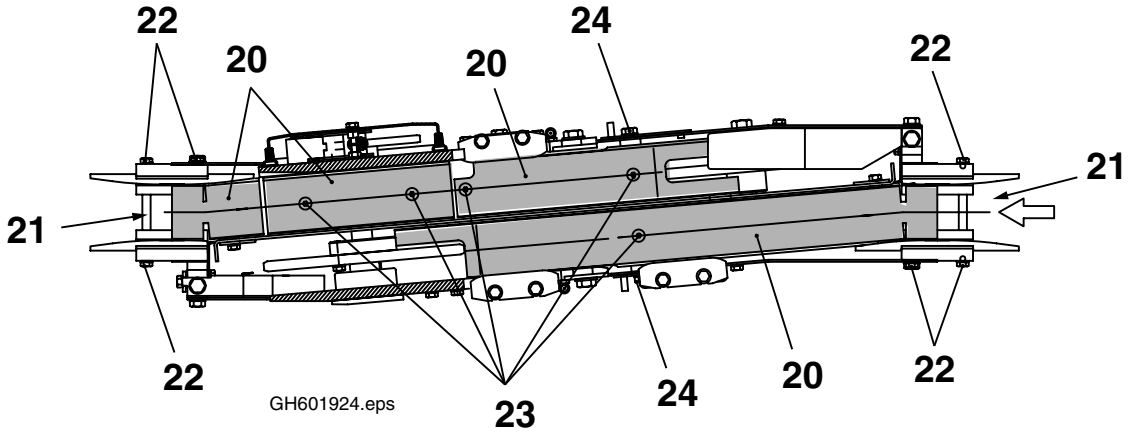

2.2TH601360en.fm

5

5.3 Electrical equipment

5.3.1 GE Fanuc

5.3.1-1 GE Fanuc - change battery

When the BATT lamp (1) on the power supply unit (2) lights up, the battery (5) has to be changed. The base plate may be connected while the battery is being replaced. To change the battery; do the following:

a) Remove the battery cover (7) located on the lower part of the power supply unit front.

b) Detach the battery from the clips (6).

c) Change the battery and attach the clips to the new battery.

d) Disconnect the cable connector (4) of the old battery and discard the battery.

Caution! **Handle the old battery in a safe way!**
The battery contains harmful substances and must not be thrown away in nature. Hand it in to the nearest recycle centre.

e) Carefully insert the connector of the new battery into one of the female contacts (3) on the plate with the aid of needle nose pliers.

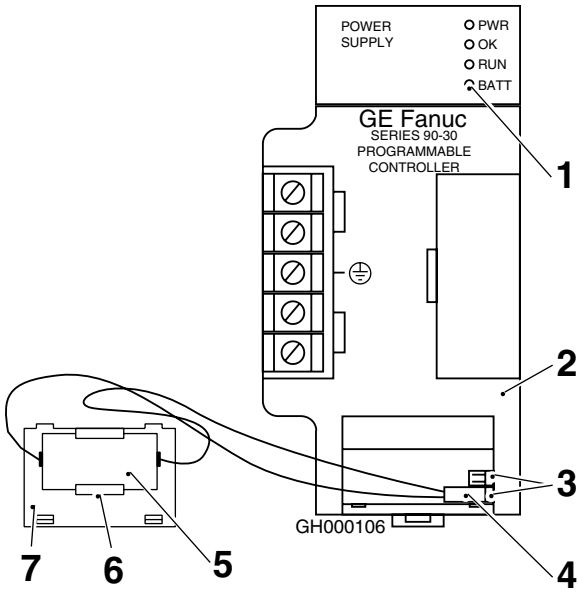

1 BATT lamp
2 Power supply unit
3 Contact
4 Cable connector
5 Battery
6 Clips
7 Battery cover

(Cont'd)

2.2TH601360en.fm

(Cont'd)

f) Reposition the battery cover (7).

Note! The battery replacement must be completed within 20 minutes, or else the RAM memory might be erased.

WARNING! **Risk of injuries**
Do not burn lithium batteries! Do not try to recharge lithium batteries! The battery may explode, catch fire or discharge lethal substances!

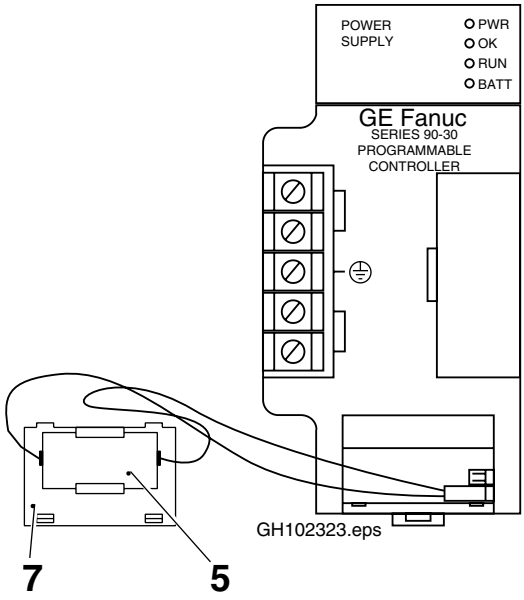

5 Battery
7 Battery cover

2.2TH601360en.fm

5

5.3.1-2 GE Fanuc - change Input / Output module

To change the I/O (Input/Output) modules or the CPU module (Central Processing Unit), do the following:

If I/O module: Remove the terminal (4) according to procedure 5.3.1-4 GE Fanuc - change terminal.
Follow the items a) to h) below.

If CPU module: Follow the instructions below:

a) Grip the upper section of the module (6) firmly.

b) Push the catch (7) on the underside of the module upwards, and tilt the module outwards.

c) Let go off the catch.

d) Pull the entire module upwards so that the hook is disengaged from the groove (2) in the base plate (1).

e) Replace the module with a new one.

f) Hold the new module with the hooks (3) at the back away from you.

g) Place the module in front of the contact concerned and tilt it upwards so that the upper hook (3) at the back of the module engages the groove in the base plate (1).

h) Press the module (6) down, until the catch (7) engages the base plate (1).

On the I/O module: Put the terminal back again, see procedure 5.3.1-4 GE Fanuc - change terminal.

2.2TH601360en.fm

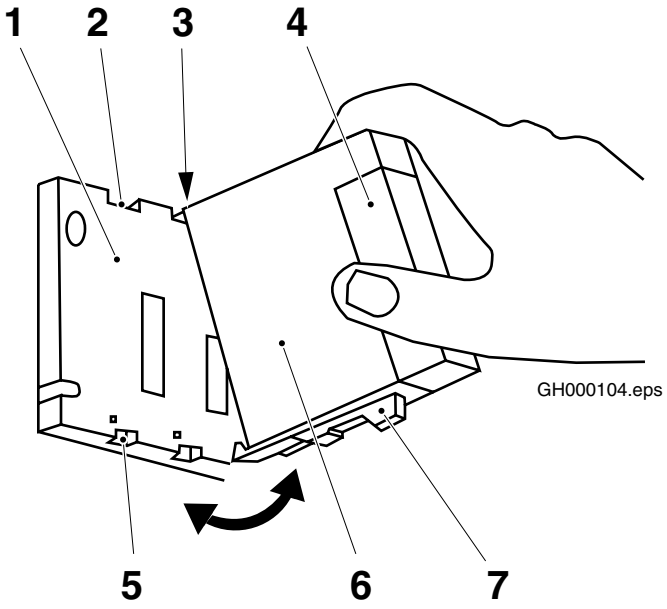

1 Base plate
2 Upper groove in base plate
3 Upper hook at back of module
4 Terminal
5 Lower groove in base plate
6 Module
7 Catch

5.3.1-3 Check equipment identity numbers

Tools	- Keyboard with PS/2 connector

Below the list of available distribution equipment (DE) and the PLMS identity (ID) numbers:

Machine	Abbreviation	PLMS ID No
Tetra Easy Ride	TER	8000

Set of identity No-s

Note! Before setting the ID No-s on the PLC CPU, make sure that your distribution equipment is prepared for PLMS Data Collection System.

If not, apply the proper updating or rebuilding.
Contact Distribution Systems for further details.

To set the ID numbers, do as follows:

a) Connect the laptop to the distribution equipment CPU.
b) Start **LM90** communication software.
c) From the Main menu, press **F2** to go to the **Configuration Package**.
d) Select the machine program.
e) Check that you are **ONLINE** with the PLC; change with **ALT+M**.
f) Press **F2** to display **CPU CONFIGURATION**.
g) Press **F3** to assign **PLC ID**.

(Cont'd)

2.2TH601360en.fm

5 Maintenance instructions

(Cont'd)

h) Type the DE identity number (see table page 108) in the **NEW PLC ID** field (1), then press **ENTER** to confirm.

i) Press **ESC** three times.

j) Select **Y** to exit the configuration package.

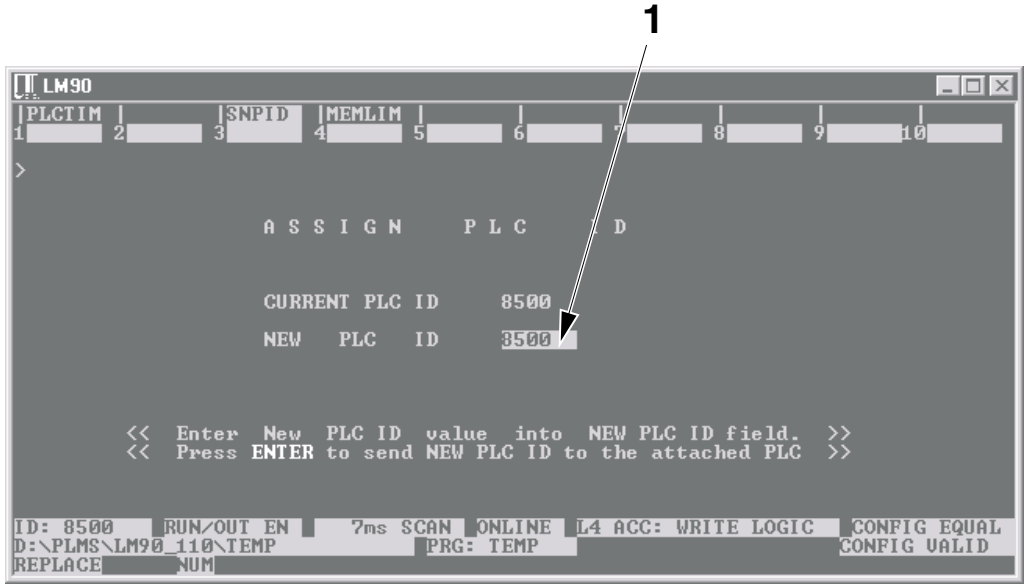

GH602008.eps

1 New PLC ID field

2.2TH601360en.fm

5

5.3.1-4 GE Fanuc - change terminal

To change the terminal, perform the following steps:

a) Switch off mains power.

b) Open the terminal (3) hatch.

c) Push the catch (2) upwards.

d) The entire terminal block now tilts outwards a little.

e) Grasp the handle (4) and pull it towards you until the terminal contacts have been disengaged from the module.

f) The catch has now been released and the entire terminal can be removed.

g) Replace the terminal.

h) Hold the new terminal with the hatch towards you and the hook (5) on the back of the terminal away from you.

i) Place the terminal in front of the module concerned and tilt it so that the hook at its back engages the groove in the module.

j) Press the terminal against the module until the catch locks into the terminal.

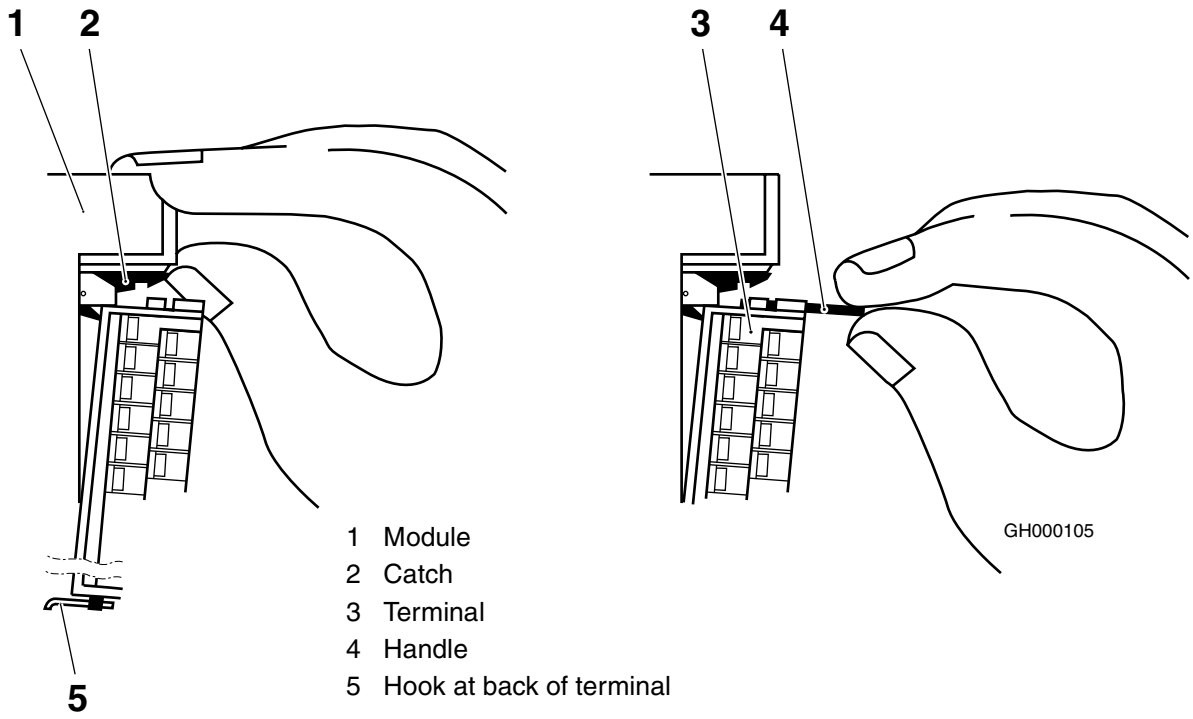

1 Module
2 Catch
3 Terminal
4 Handle
5 Hook at back of terminal

2.2TH601360en.fm

5

5.3.2 Frequency inverters

5.3.2-1 Frequency converter - description

DANGER!

Risk of electrical shock!
After the power is turned OFF residual voltage remains in the capacitor inside the converter. Do **not** touch the terminal immediately after turning the power OFF. Failure to observe this information will put **your life in danger**!

Discharge time is at least one minute from the time all indicators on the digital operator go OFF.

Frequency converter overview

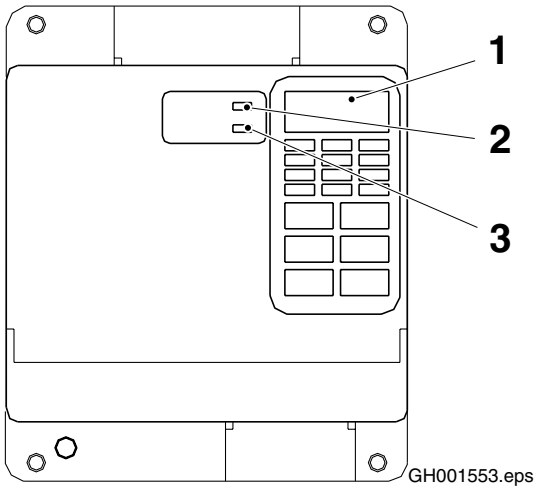

1 Digital operator
2 Run indicator
3 Alarm indicator

Run indicator
The run indicator (2) light

- **flashes** when the machine is ready to run
- **is fixed** when operation is in progress

Alarm indicator
The alarm indicator (3) light

- **flashes** when warning status is triggered
- **is fixed** when protective mechanism is actuated, or when there is converter error.

Alarm indication, see 5.3.2-3 Frequency converter - fault codes on page 118.

(Cont'd)

(Cont'd)

Digital operator display section

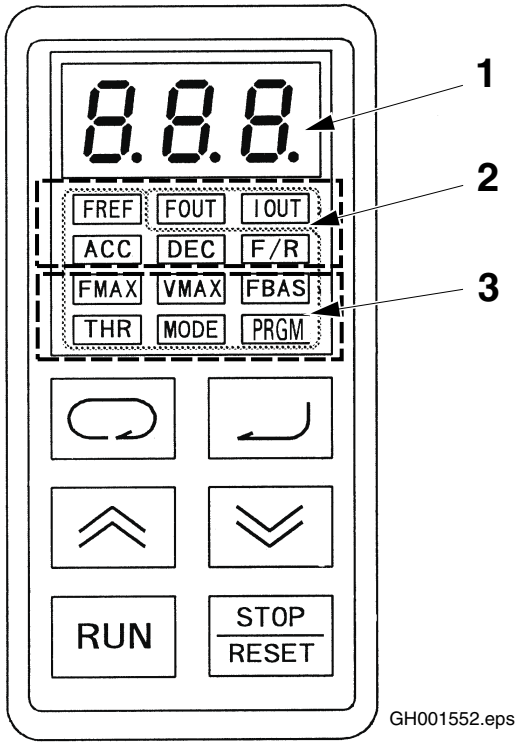

1 Display
2 Monitor item indicators (green light)
3 Constant item indicators (red light)

2.2TH601360en.fm

Display

Reference frequency values, output frequency values, indicator settings (items), and fault codes are displayed.

Indicators

Indicate the converter status.
All the items for the indicators can be monitored on the display during operation.

5

Monitor item indicators (green light)

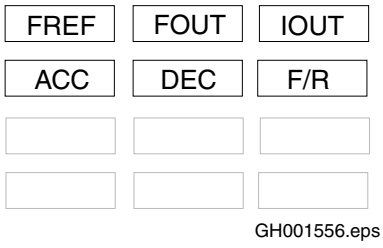

Indicator:	
FREF	Reference frequency (Hz)
FOUT	Output frequency (monitoring) (Hz)
IOUT	Output current (monitoring) (A)
ACC	Acceleration time (seconds)
DEC	Deceleration time (seconds)
F/R	Forward/reverse rotation selection

(Cont'd)

(Cont'd)

Constant item indicators (red light)

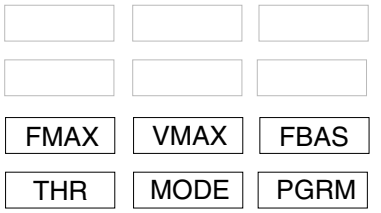

GH001557.eps

Indicator:

FMAX	Maximum frequency (Hz)
VMAX	Maximum voltage (V)
FBAS	Maximum voltage frequency (Hz)
THR	Electronic thermal reference current (A)
MODE	Operation mode selection
PGRM	Gives access to all items

Digital operator operation keys

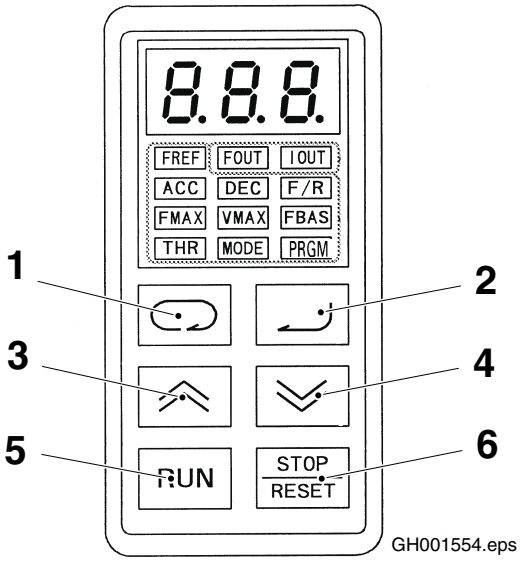

GH001554.eps

Operation key:

1 Mode Switches between the indicators
2 Enter Registers the value set
3 Increment Increases an item No, or the value of an item
4 Decrement Decreases an item No, or the value of an item
5 RUN Valid only when the sequence is operated from the digital operator
6 STOP/RESET Resets the converter

2.2TH601360en.fm

5

5.3.2-2 Frequency converter - set

Machine status	Mains power ON
SPC	

During operation

All settings (items) for the indicators can be monitored on the display during operation.

Some items can be changed during operation, see Items possible to set during operation in the table on page 116.

To set items during operation, do as follows:

a) Press **MODE** to shift to the indicator preferred.

b) To change the item, press **Increment** to increase the value, or **Decrement** to decrease the value. Holding down the key changes data quickly.

c) To register the new data:
Press **Enter** to store the new value.

Note! If the new value is **not to be registered**:
Press **MODE** instead of **Enter**. The new value becomes invalid and the next item is displayed.

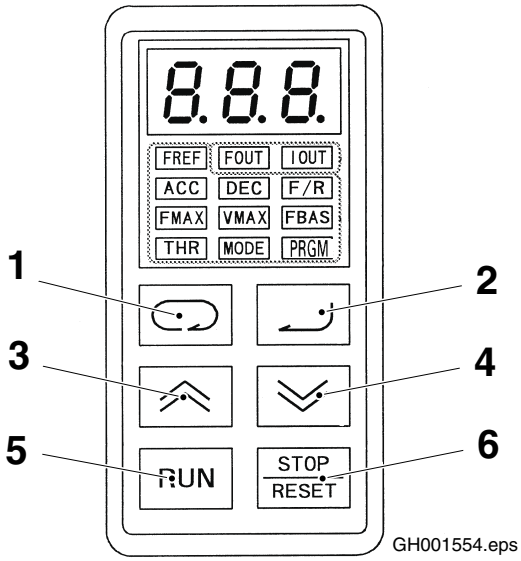

Operation key:
1 Mode
2 Enter
3 Increment
4 Decrement
5 RUN
6 STOP/RESET

(Cont'd)

2.2TH601360en.fm

(Cont'd)

Frequency converter stopped

All settings (items) for the indicators can be changed when the frequency converter is stopped.

To set, do as follows:

a) Press both **MODE** and **Enter** at the same time until **PRGM** is lit.

b) Press **Increment**, or **Decrement** until the item wanted appears on the display.

c) Press **Enter**. The value of the item wanted is displayed.

d) To change value, press **Increment**, or **Decrement**. The value starts flashing, which indicates that the value is yet to be registered.

e) Press **Enter** to store the new value. The display stops flashing. After a few seconds the display returns to the item chosen.

Note! If the new value is **not to be registered**, press **MODE** instead of **Enter**. The new value becomes invalid and the display returns to the item No chosen.

f) To set another item, start from b).

g) Press **MODE** to enter monitoring position again.

2.2TH601360en.fm

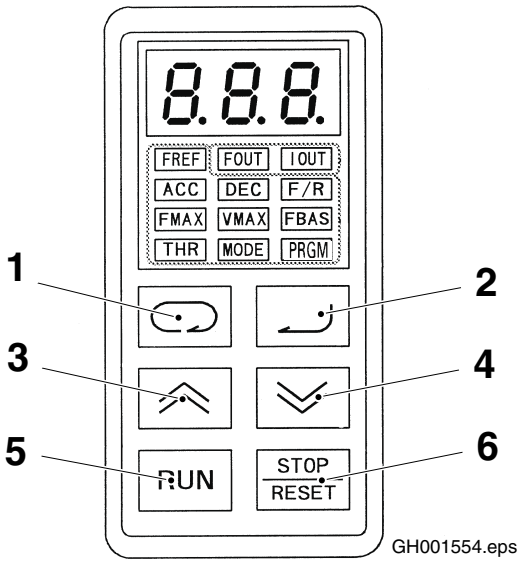

Operation key:
1 Mode
2 Enter
3 Increment
4 Decrement
5 RUN
6 STOP/RESET

Settings for items, frequency converter G011-G016

Note! To reset to factory settings, set parameter “n01” to 8.

Item on display	Items possible to set during operation	Function	Settings
n01		Constant write-inhibit selection, constant initialization.	2
n02		Operation mode selection	1
n03		Stop mode	0
n04	n04	Forward/reverse rotation selection	0
n05		Reverse rotation not allowed	0
n06		Multi-function input selection 1 Note! Set item n08 before n06!	4
n07		Multi-function input selection 2	5
n08		Multi-function input selection 3 Note! Set item n08 before n06!	6
n09		Multi-function output selection 1	11
n10		Multi-function output selection 2	0
n11	n11	Frequency reference 1 Note! If n11 is to be increased over max.frequency (n24), start with increasing the max frequency n24.	17
n12	n12	Frequency reference 2	20
n13	n13	Frequency reference 3	23
n14	n14	Frequency reference 4	30
n15	n15	Frequency reference 5	45
n16	n16	Frequency reference 6	60
n17	n17	Frequency reference 7	75
n18	n18	Frequency reference 8	85
n19	n19	Inching frequency	6.0
n20	n20	Acceleration time 1	2
n21	n21	Deceleration time 1	2
n22	n22	Acceleration time 2	2
n23	n23	Deceleration time 2	2
n24		Maximum frequency	85
n25		Maximum voltage	230
n26		Maximum voltage frequency	60
n27		Intermediate output frequency	1.5
n28		Intermediate output frequency voltage	12
n29		Minimum output frequency	1.5
n30		Minimum output frequency voltage	12
n31		Electronic thermal reference current	2,1
n32		Electronic thermal protection	0
n33		Stall prevention during deceleration	0
n34		Stall prevention level during acceleration	170

Factory setting

2.2TH601360en.fm

Item on display	Items possible to set during operation	Function	Settings
n35		Stall prevention level during operation	160
n36		Operation after recovery from power interruption	0
n37		Carrier frequency	4
n38	n38	Automatic torque boost gain	1.0
n39	n39	Frequency reference gain	1.00
n40	n40	Frequency reference bias	0
n41		Frequency reference upper limit	100
n42		Frequency reference lower limit	0
n43		Frequency reference input terminal	0
n44		Multi-function analog output	0
n45	n45	Multi-function analog output gain	0.30
n46		DC control current	50
n47		Interruption DC control time	0.5
n48		Start-up DC control time	0.0
n49		S-shape acceleration and deceleration characteristics	0
n50		Over-torque detection	0
n51		Over-torque detection level	160
n52		Over-torque detection time	0.1
n53		Frequency detection level	0.0
n54	n54	Slip compensation gain	0.0
n55		Motor current with no load	40
n56		Jump frequency 1	0.0
n57		Jump frequency 2	0.0
n58		Jump frequency 3	0.0
n59		Jump width	1.0
n60		Number of fault retries	0
n61		Stop key selection (1=disabled, 0=enabled)	1
n62		Slip compensation primary delay time	2
n63		UP/DOWN command frequency memory	0
n64		Operator's frequency setting method	0
n65		Frequency reference, monitor unit selection	0
n66		Time over detection	0
n68		Error history (only display)	-
n69		PROM number (for manufacturer's reference, only display)	-
n71		Baud rate selection	2
n74		Parity selection	0
n78		Time to wait for sending	5
n83		Slave address	0

Factory setting

2.2TH601360en.fm

5.3.2-3 Frequency converter - fault codes

Machine status	Mains power ON
SPC	

Alarm indicator

The alarm indicator (1) light

- **flashes** when warning status is triggered. The display (2) also flashes. Eliminating the cause recovers the system automatically.
- **is fixed** when protective mechanism is actuated. The converter output is shut OFF, and the motor stops.
  After taken the necessary actions, press **RESET** or turn the power OFF, then ON.
- **is lit** when there is converter error. Take actions as to the table below, turn the power OFF, then ON. If the problem continues, replace the unit. Also see page 121.

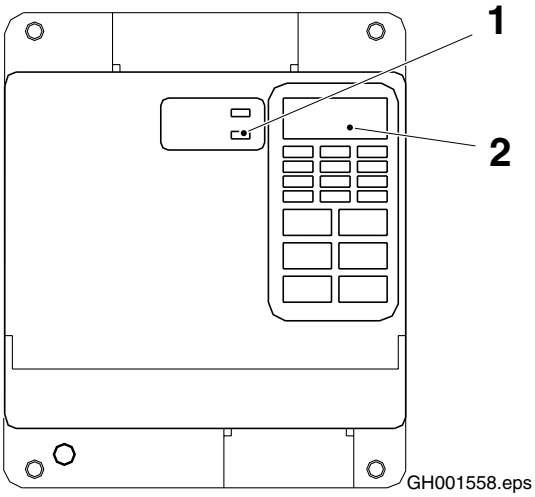

1 Alarm indicator
2 Display

2.2TH601360en.fm

5

(Cont'd)

(Cont'd)

List of warning and error codes

Display	Alarm	Description	Action
EF	Flashes	Simultaneous input of forward and reverse rotation commands	Review the sequence
Uu	Flashes	Main circuit undervoltage. The DC voltage of the main circuit dropped below the low-voltage detection level when the converter was stopped	• Check the power voltage • Check the power input line for disconnection • Check the terminal block screws for looseness.
ou	Flashes	Main circuit overvoltage. The DC voltage of the main circuit exceeded the overvoltage detection level when the converter was stopped	Check the power voltage
oH	Flashes	Radiation fin overheated. Overheated when the converter was stopped	• Check the ambient temperature • Install a cooling fan or air conditioner
SΓ P	Flashes	Digital operator stopped. STOP/RESET pressed while the converter was being operated using control circuit terminals SF and SR. The converter decelerates and stops the motor.	Open both SF and SR (see Omron Installation Manual)
oL3	Flashes	Overtorque. The flow of current exceeded the value determined with the constant set in n51 for more than the specified period determined with the constant set in n52.	² Make sure that the n51 and n52 settings are appropriate ² Check the operating status of the mechanical system and remove the cause of error.
bb	Flashes	External base block in progress An external base block signal was input.	Make sure that the sequence circuit is appropriate.
SEr	Flashes	Sequence error A local or remote selection signal was input to the converter in operation.	Make sure that the sequence circuit is appropriate.
oC	Lit	Overcurrent. The output current instantaneously exceeds 250% of the rated amperage.	• The output side of the converter is shorted or grounded. • Load inertia is excessive • The acceleration and deceleration time settings are too short • A special motor is used • The motor was started during free running • The magnetic contactor on the output side of the converter was opened and closed. After taken necessary action, RESET.
ou	Lit	Main circuit overvoltage. Because regenerative energy from the motor was excessive, the DC voltage of the main circuit exceeded approximately 410V.	The deceleration time setting is too short. • Increase the deceleration time • Connect a braking resistor (or braking resistor unit)

2.2TH601360en.fm

Display	Alarm	Description	Action
Uu1	Lit	Main circuit undervoltage. The DC voltage of the main circuit dropped below the specified level (approximately 160V or less)	Cause: • The input voltage dropped • Open-phase occurred • An instantaneous power interruption occurred Check: • the power voltage • the power input line • the terminal block screws for loosening
Uu2	Lit	Control power supply fault. A voltage fault occurred in control power supply	Turn the power OFF, then ON. If the problem persists, replace the unit. Also see page 121
oH	Lit	Radiation fin overheated. Overheated because of ambient temperature rise or converter temperature rise due to overload	• Load is excessive. Reduce the load • The V/f characteristics are inappropriate. Reset constant No-s n24 to n26 • The acceleration/deceleration time or cycle is too short. Increase time or cycle • The ambient temperature is too high. Install a cooling fan or air conditioner
oL1	Lit	Motor overload. The electronic thermal relay actuated the motor overload protection function.	• Review the load size. V/f characteristics, acceleration/deceleration time, and cycle time • Set the rated motor amperage in constant No n31
oL2	Lit	Converter overload. The electronic thermal relay actuated the converter overload protection function.	• Review the load size. V/f characteristics, acceleration/deceleration time, and cycle time • Review the converter capacity
oL3	Lit	Overtorque. A current exceeding the value set in n51 flowed for more than the time set in n52	² Check if the n51 and n52 settings are appropriate ² Check the machine use status, and eliminate the cause of the problem.
EF1	Lit	External fault. The converter received abnormal input from external circuits.	• Review the external circuits • Review the external sequence • Check the signal line of multi-function contact input for disconnection
F00	Lit	Initial memory error	Turn power OFF, then ON. If necessary, replace the unit. Also see page 121
F01	Lit	Constant error	Write down all constant settings, initialize the constants, and RESET. Turn power OFF, then ON. If necessary, replace the unit. Also see page 121
F04	Lit	A/D converter error	Turn power OFF, then ON. If necessary, replace the unit. Also see page 121

2.2TH601360en.fm

Display	Alarm	Description	Action
F05	Lit	Option error. The digital operator has an error or faulty contact.	Turn power OFF, then reinstall the digital operator. If necessary, replace the unit. Also see page 121
F06	Lit	Control circuit error. An error occurred in the control power supply or hardware	Check the power cables. If necessary, replace the unit. Also see page 121

5.3.2-4 Frequency converter - change

DANGER! Risk of electrical shock, and damage to equipment!
If replacing the frequency converter, read the OMRON Installation Manual before starting work.

IMPORTANT! **Risk of damage to equipment!**
Turn the screw illustrated below to position PNP, to fit the machine PLC system. Failure to observe this information could result in damage to equipment!

Read the OMRON Installation Manual. When installing the frequency converter, observe to turn the screw (arrow) carefully to PNP.

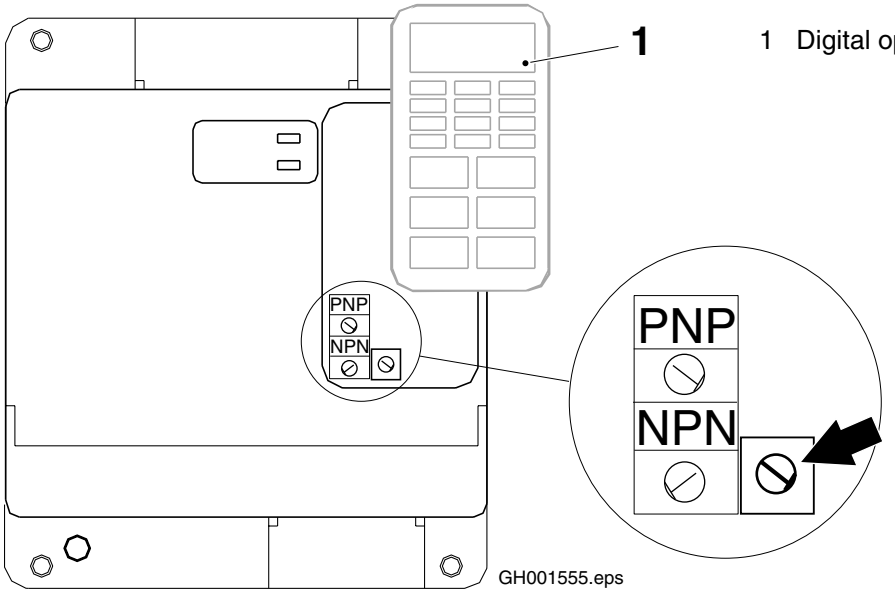

1 Digital operator

2.2TH601360en.fm

5

5.3.3 Electrical components

5.3.3-1 Electrical components - set photocell

Transmitting/receiving type

Open the cap (1) and check that the switch (5) is set to PNP (positive logic) and that the switch (6) is set to D ON. (The signal will be sent when the object is detected between the photocells.)

Check the transmitter and the receiver position, see illustrations for each model below.

Adjust the sensitivity as follows:

Model A (counting photocell pair)

a) Turn the adjustment knob (4) to Max (or almost Max when using metallized package material)

Model B (queue photocell pair)

a) Begin without any object to be detected.
Turn the adjustment knob (4) anti-clockwise to Min, and then clockwise until both the green LED (2) and the red LED (3) light up. To secure the setting, turn the adjustment knob just a little bit more.

b) Place the object to be detected between the photocells. Confirm that the green LED (2) is lighting.

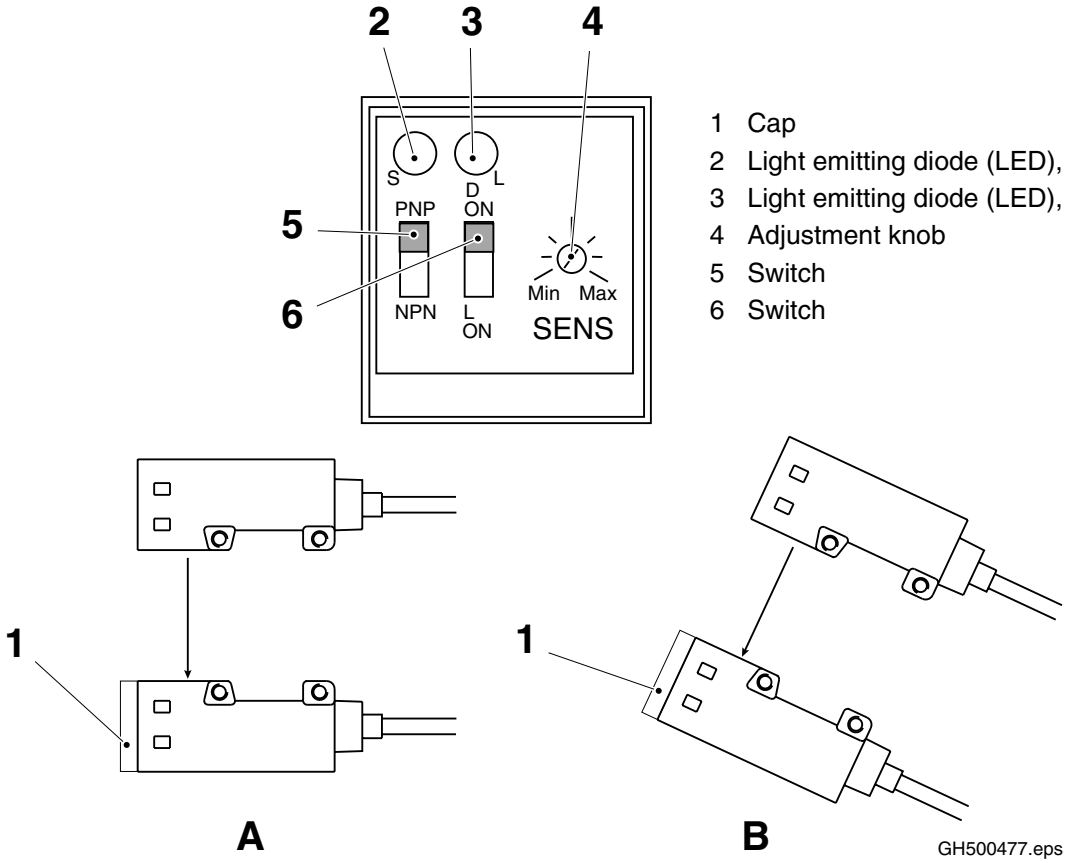

1 Cap
2 Light emitting diode (LED), green
3 Light emitting diode (LED), red
4 Adjustment knob
5 Switch
6 Switch

2.2TH601360en.fm

5

Photocell location

For location of the two different photocell models, see illustrations below.

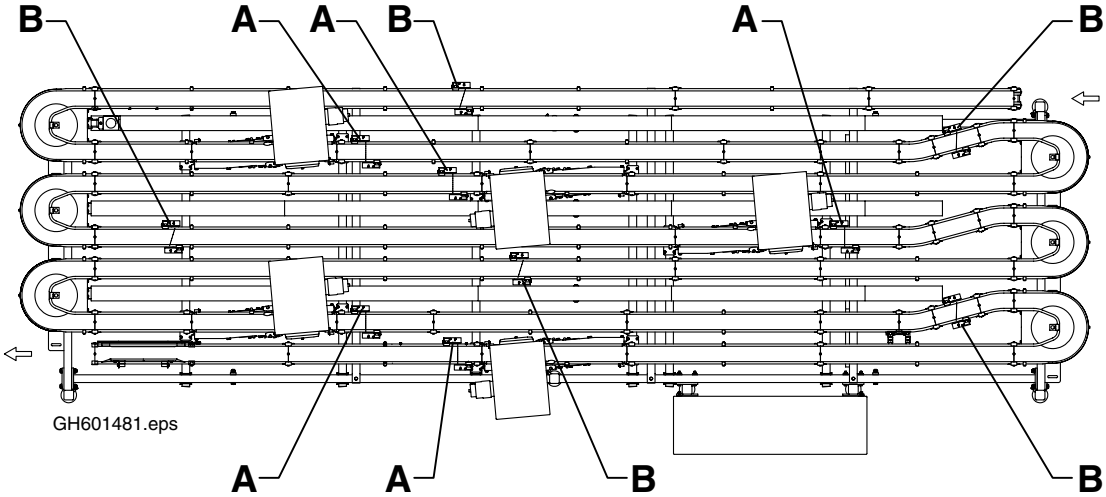

A = Counting photocell pair
B = Queue photocell pair

2.2TH601360en.fm

5

This page intentionally left blank

2.2TH601360en.fm

6 Electrical documents guide

2.2TH601362en.fm

6.1 Electrical documents guide

General

Electrical documents guide is an explanation of how to find your way trough the chapters **Table of contents for electrical documents, Spare parts**, **Component location, Circuit diagrams, Mains & connection diagrams** and **Program documents** in this TeM.

Note! **All** the examples in "**Electrical documents guide"** are composed only to demonstrate, and have nothing to do with the distribution equipment this TeM handles.

Chapter orientation

Chapter 7 "Table of contents for electrical documents"

This chapter consists of the list "Electrical document" (see example next page) which have the function as a table of contents for all the electrical documents included in this TeM manual. The contents of the list is in the same order as the chapters (chapter 8-12) and is divided in groups for each chapter. Under each group there is a reference to the chapter it is to be found in (see the big arrows on the example on next page). The small arrows show when the electrical document consists of more than one page.
The last position on the list is the document number for the manual part, that is everything except the electrical documents (for more detailed information see Number of pages) on page 4.

(Cont'd)

2.2TH601362en.fm

6

(Cont'd)

```
Tetra Pak        MSTK  BoM Explosion (BoM Book)                    Plant: PDM1          PM1 Print date: 2000.11.06
Created on 2000.10.16 by              ELECTRICAL DOCUMENT                    1370659-0101       Page   1
-----------------------------------------------------------------------------------------------------------------
General remark
            I - TETRA EASY RIDE CHILCHOTA 200B
                        ALL DOCUMENTS ARE TO BE DISTRIBUTED IN
                        SIZE A4. BOM 1370659-0101 (PAGE 1-5)
                        ARE TO BE DELIVERED WITH THE BELOW
                        MENTIONED DOCUMENTS.
-----------------------------------------------------------------------------------------------------------------
ECM            P84649(L84644)
Release date     **
-----------------------------------------------------------------------------------------------------------------
ChgPosition  S   S        Description          A Si  Identity    DTp Prt Vs Un   Column quantity
             p   H                             s ze                         it   All
-----------------------------------------------------------------------------------------------------------------
I  0810                  ELECTRICAL CABINET     X    1370657-0101            PC    1
                         I t e m    t
                         (PAGE 1-6)
                         .
I  0820                  MACHINE                X    1370658-0101            PC    1
                         I t e m    t
                         (PAGE 1-7)
                         .
I  0830                  STANDARD EQUIPMENT     X    1370660-                PC    1
-----------------------------------------------------------------------------------------------------------------
I  0840                  SPARE PART KIT         X    1370661-                PC    1
I  0860                                                                             1
                         I t e m    t e x t
                         FOR THE ELECTRICAL DOCUMENTS ABOVE,
                         SEE CHAPTER 8 (SPARE PARTS).
                         .
I  0905                  MOUNTING DRAWING         A4-  53164-0005 ELD 001 AA       x
-----------------------------------------------------------------------------------------------------------------
I  0906                  MOUNTING DRAWING         A4-  53164-0006 ELD 001 AA       x
I  0907                  MOUNTING DRAWING         A4-  53164-0007 ELD 001 AA       x
I  0908                  MOUNTING DRAWING         A4-  53164-0008 ELD 001 AA       x
-----------------------------------------------------------------------------------------------------------------
I  0910                  MOUNTING DRAWING         A4-  53164-0010 ELD 001 AA       x
I  0911                  MOUNTING DRAWING         A4-  53164-0011 ELD 001 AA       x

Created on 2000.10.16 by SEJOHANNESEJ ELECTRICAL DOCUMENT                  1370659-0101       Page   1
```

GH500563.tif

```
Tetra Pak        MSTK  BoM Explosion (BoM Book)                    Plant: PDM1          PM1 Print date: 2000.11.06
Created on 2000.10.16 by              ELECTRICAL DOCUMENT                    1370659-0101       Page   2
-----------------------------------------------------------------------------------------------------------------
ChgPosition  S   S        Description          A Si  Identity    DTp Prt Vs Un   Column quantity
             p   H                             s ze                         it   All
-----------------------------------------------------------------------------------------------------------------
I  0990                  FUSE PANEL SIGN          A4-1369115-0                00 AA       x
I  0999                                                                             1
                         I t e m    t e x t
                         FOR THE ELECTRICAL DOCUMENTS ABOVE,
                         SEE CHAPTER 9 (COMPONENT LOCATION).
                         .
I  1002                  CIRCUIT DIAGRAM          A4-  45142-0002 ELD 001 AA       x
                         POSITION SUMMARY
-----------------------------------------------------------------------------------------------------------------
I  1005                  CIRCUIT DIAGRAM          A4-  45142-0005 ELD 001 AA       x
I  1006                  CIRCUIT DIAGRAM          A4-  45142-0006 ELD 001 AA       x
I  1007                  CIRCUIT DIAGRAM          A4-  45142-0007 ELD 001 AA       x
-----------------------------------------------------------------------------------------------------------------
I  1008                  CIRCUIT DIAGRAM          A4-  45142-0008 ELD 001 AA       x
I  1009                  CIRCUIT DIAGRAM          A4-  45142-0009 ELD 001 AA       x
I  1020                  CIRCUIT DIAGRAM          A4-  45142-0020 ELD 001 AA       x
```

GH500564.tif

Example of the list “electrical document”

2.2TH601362en.fm

6

(Cont'd)

(Cont'd)

Chapter 8 “Spare parts”

Consists of the list for the electrical equipment, except the list “Electrical document”, which is included in chapter 7.

Chapter 9 “Component location”

Consists of mounting drawings and fuse panel label, showing the location for each electrical component on the distribution equipment.

Chapter 10 “Circuit diagrams”

Consists of circuit diagrams divided according to the table below.

Sheet 0002	is a Position summary where all electrical components used in drawings are listed as a position and with a cross reference.
Sheet 0005-0050	are drawings.
Sheet 0080-0087	is the earth summary
Sheet 0090	shows the line connection order with a cross reference to the valid circuit diagram for each connection.
Sheet 0091	shows the terminal summary with a cross reference to the valid circuit diagram for each terminal.
Sheet 0099	is a summary of all the electrical alterations on the distribution equipment.

(Cont'd)

2.2TH601362en.fm

(Cont'd)

Chapter 11 “Mains & connection diagrams”

The **Mains & connection diagrams** chapter consists of two parts, **Mains connection diagrams** and **Connection diagrams**

In the **Mains connection diagrams** the second connection diagram shows;

- how the equipment should be connected to the local supply
- dimension of the connection cable
- connection of the matching transformer (when used)

Caution! Concerning the dimension of the connection cable always consider the local regulations.

The **Connection diagrams**, shows all the connections from the electrical cabinet to other parts of the machine.

Chapter 12 “Program documents”

The PLC-listing in the section **Program documents** consists of Ladder diagram, Cross reference list, Configuration and in some cases Variant depending document.

Note! Depending on the size of the Program documents, this chapter may be in a separate binder(s).

2.2TH601362en.fm

Drawing identification

The identity of the drawings in above mentioned chapters consists of a:

- main number **(a)**
- sheet number **(b)**
- version number **(c)**

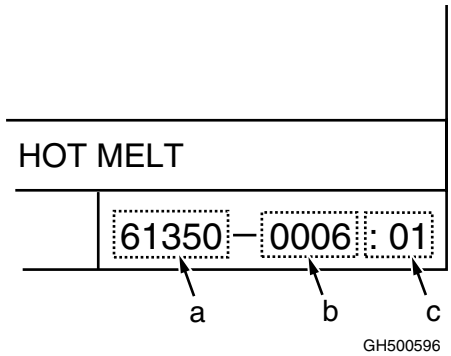

The sheet number (**b**) is the consecutive numbering of the parts (sheets) which belong to the main number (**a**) and is used as a reference in the circuit diagrams. The version number (**c**) shows the version of the drawing.

Numbering system for components

The position number is divided in three parts.

- prefix
- function designation
- running number

See example below

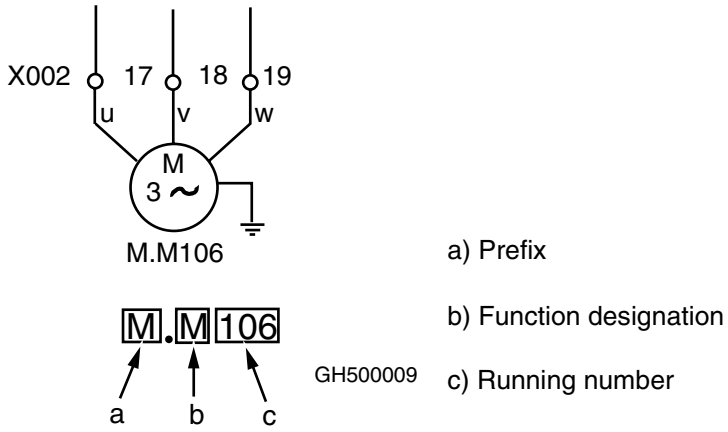

Prefix (a)

The prefix **(a)** is showing the location of the component.

- Position numbers without prefix indicates that the component is mounted in the Electrical cabinet.
- The prefix **M** indicates that the component is mounted on the machine.
- The prefix **P** indicates that the component is mounted on a separate control panel.

Function designation (b)

The function designation **(b)** are indicated according to international standard.

Running number (c)

The electrical components are numbered in a consecutive illogical order.

(Cont'd)

2.2TH601362en.fm

6

(Cont'd)

Function designation table

Designat	Signification in electrical diagram
A	controllers, amplifiers
B	sensors and limit switches
C	capacitors
D	binary element, delay devices, storage devices
E	miscellaneous
F	protective devices
G	generators, power supplies
H	signalling devices
K	relays, contactors
L	inductors, reactors
M	motors
N	analogue element
P	measuring equipment, testing equipment
Q	switching devices for power circuits
R	resistors, heat element
S	switching devices for control circuits selectors
T	transformers
U	modulators, changers
V	tubes, semiconductors
W	transmission paths, waveguides aerials
X	terminals, plugs, sockets
Y	electrically operated mechanical devices
Z	terminations, hybrid, transformers, filter, equalizers, limiters

2.2TH601362en.fm

How to trace a cable

Example: How to trace cable No. 5

- Go to the chapter **Mains & connection diagrams**
- In the **Mains & connection diagrams** find cable No 5
- Note the component connected to the cable (M.M005)
- Go to the chapter **Circuit diagrams**
- Go to the **Position summary** (first sheet(s) in the **Circuit diagrams**)

The sheet No. is located opposite the component No (pos M.M005). This tells you on which sheet in the **Circuit diagrams** the connection is shown.

- Go to sheet 06 in the **Circuit diagrams**
- Find the component (M.M005)
- If the component, as in this example, is controlled by a separate component (K005), the sheet reference for this component (sheet 22) is found in the **Circuit diagrams.**

Note! **All** the examples in "**Electrical documents guide"** are composed only to demonstrate, and have nothing to do with the distribution equipment this TeM handles.

(Cont'd)

2.2TH601362en.fm

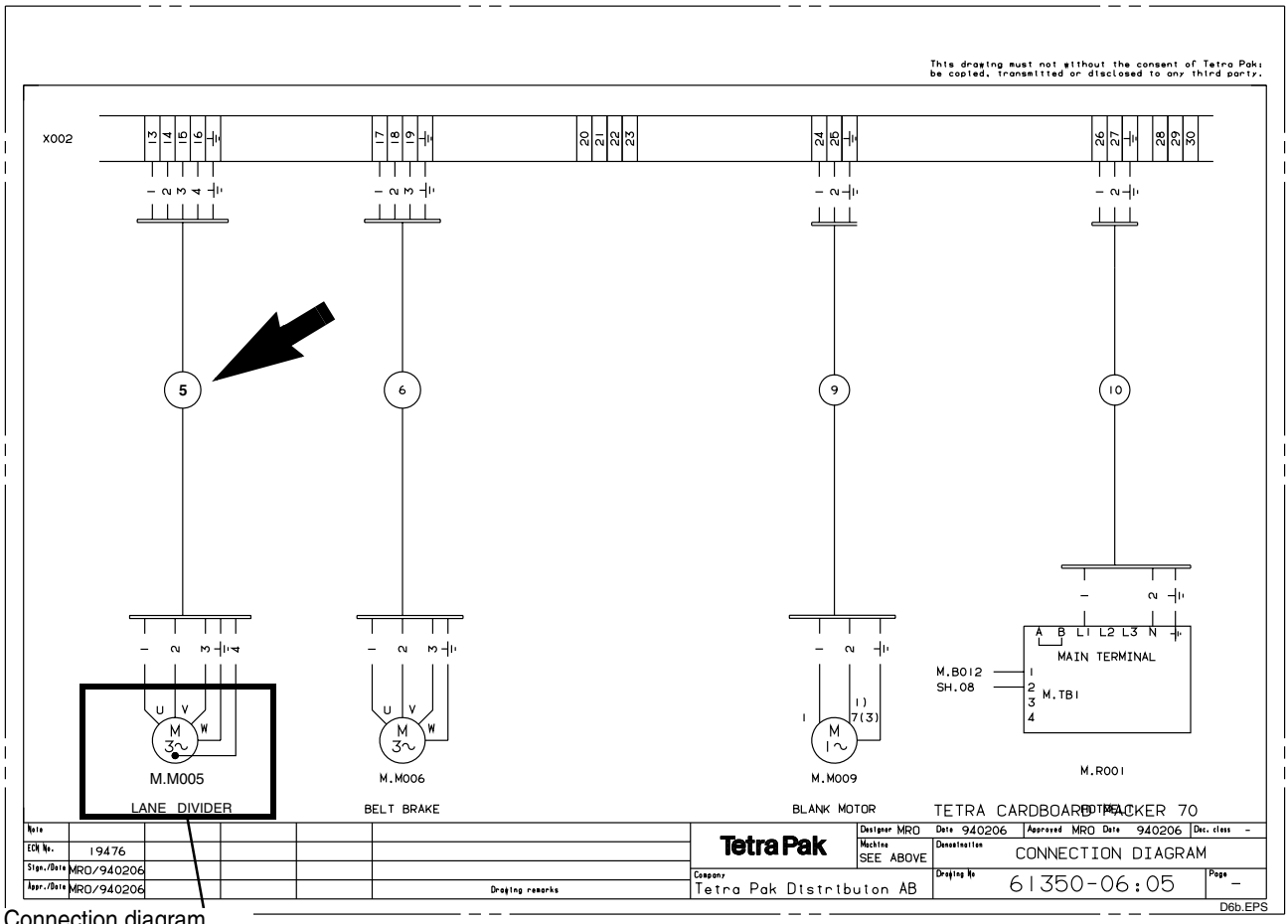

Connection diagram

Pos	Sheet	Pos	Sheet
M.B018	17	M.B050	20
M.B019	17	M.B051	20
M.B020	16	M.B052	20
M.B021	16		
M.B022	16		
M.B023	16	M.B200	19
M.B024	16	M.B901	13
		M.B902	13
M.B030	18		
M.B031	18	M.H001	26
M.B033	18		
M.B034	18	M.M001	05
		M.M002	05
M.B036	18	M.M003	05
		M.M004	06
		M.M005	06
M.B040	19	M.M006	06
M.B041	19		
M.B042	19		
M.B043	19	M.M009	08

Position summary

Packer 70	44161-02:05	Page : 1 Cont: 2

Position summary

GAD00061.EPS

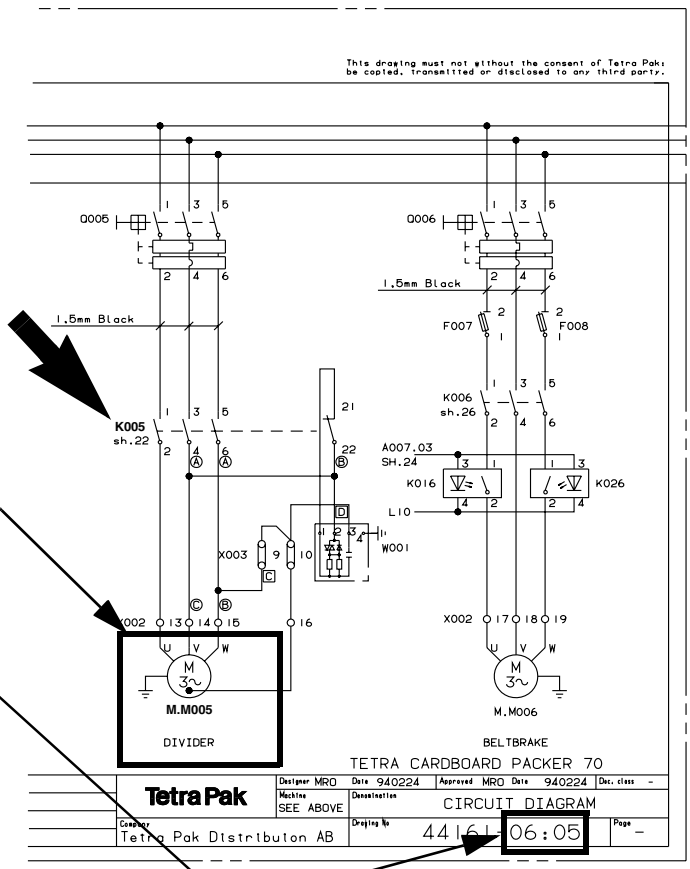

Circuit diagram

(Cont'd)

- Go to sheet 22 in the **Circuit diagrams**
- Find the controlling component (K005)

06 is a reference back to sheet 06.

The output (%Q0007) is a reference to the PLC-listing in the chapter **Program documents.**

- Go to the chapter **Program documents** to see the use in the program
- Go to the Cross reference list at the end of the PLC-listing and find the output(%Q0007)
- Note the rung No. in which the output is used (e.g rung198)
- Go to the PLC-listing and find rung 198.

Note! **All** the examples in "**Electrical documents guide"** are composed only to demonstrate, and have nothing to do with the distribution equipment this TeM handles.

(Cont'd)

2.2TH601362en.fm

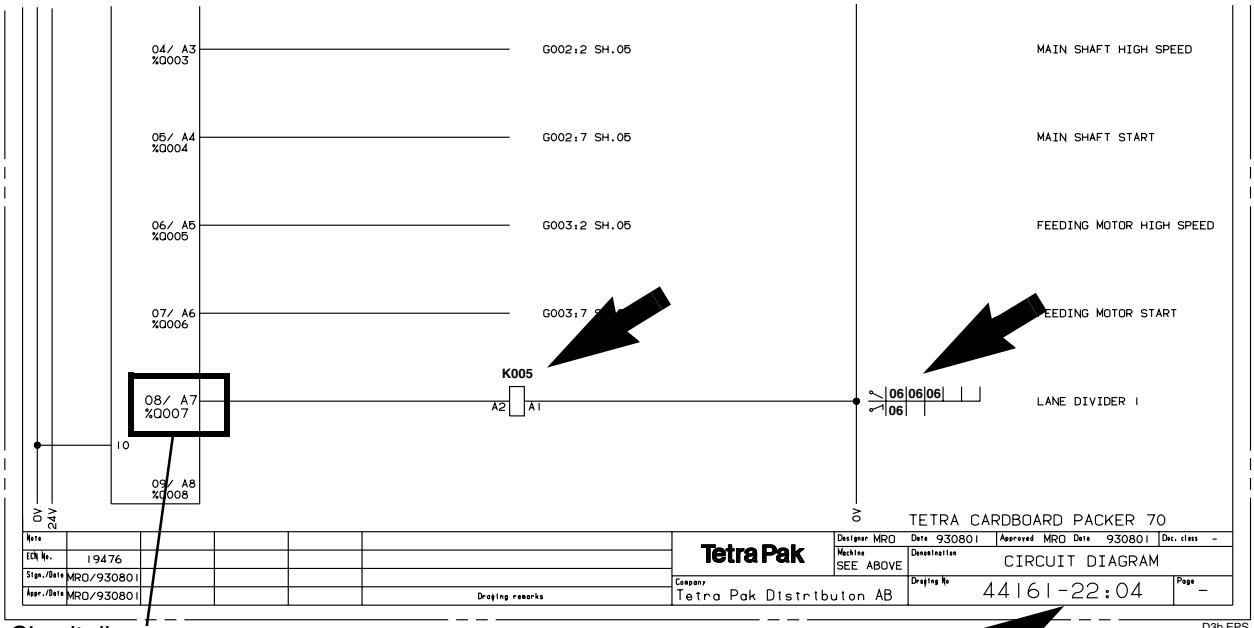

Circuit diagram

```
03-04-94  15:06                GE FANUC SERIES 90-30/90-20 DOCUMENTATION (v3.50)
                                   Tetra Cardboard Packer 70 med
                                 47796-01:01 940204 MRO ECN:19476

REF.     NICKNAME   REF. DESCRIPTION / CROSS REFERENCES
-------  --------   ----------------------------------
                    -]/[- 325
%I0059   B042       Package counter
                    -] [- 175,177,197
                    -]/[- 197
%I0060   B043       Divider in pos.
                    -] [- 26,192
                    -]/[- 198
%I0062   B200       Pack. on single conv.
                    -]/[- 140
%I0065   B050       WA flap upper pos.
                    -] [- 273
%I0066   B051       WA flap lower pos.
                    -] [- 270
%I0067   B052       WA squeez. upper pos.
                    -] [- 273
                    -]/[- 272

==========  OUTPUT  (%Q)  CROSS REFERENCES
==========

REF.     NICKNAME   REF. DESCRIPTION / CROSS REFERENCES
-------  --------   ----------------------------------
%Q0001   K002       Main shaft motor
                    -( )  138
%Q0002   K003       Feeding motor
                    -( )  138
%Q0003   G002_2     Main shaft high speed
                    -] [- 248,250
                    -( )  248
%Q0004   G002_7     Main shaft start
                    -] [- 237,253,290,334,335
                    -]/[- 241,289
                    -( )  248
%Q0005   G003_2     Feeding motor high speed
                    -( )  251
%Q0006   G003_7     Feeding motor start
                    -] [- 132,237,250,251,321
                    -]/[- 230,232
                    -( )  250
%Q0007   K005       Lane divider
                    -] [- 193,198
                    -]/[- 189
                    -( )  198
%Q0009   Y000       Pressu.
                    -( )  134
%Q0013   Y008       Folding support down
                    -( )  239
%Q0014   Y004       Infeed stop out
                    -( )  219
%Q0015   Y005       Flap up
                    -( )  237
%Q0016   Y006       Brake lane 1
                    -] [- 142,206,209,216,217,218
                    -]/[- 225
                    -( )  216
%Q0017   K006       Belt brake
                    -( )  135
%Q0018   K16_K26    Belt brake
                    -] [- 154,167,180,183,185,186,190,197,281
                    -]/[- 187,188,280
                    -( )  190
%Q0019   K004       Servo motor pusher
                    -] [- 222,223
                    -]/[- 221
                    -( )  222
```

Cross reference list GAD00004.EPS

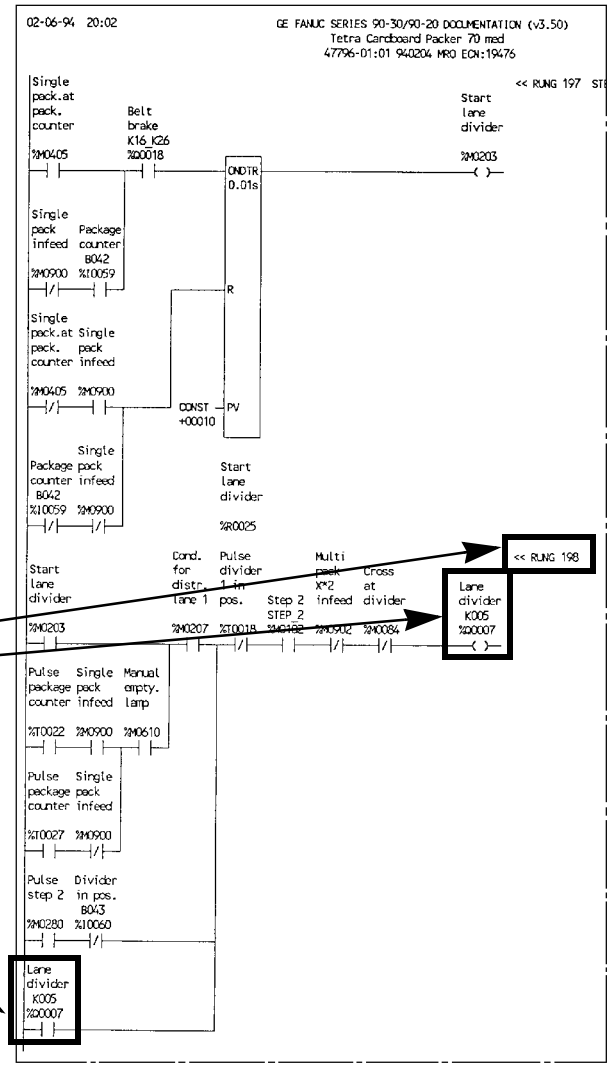

PLC-listing GAD00005.EPS

2.2TH601362en.fm

6

(Cont'd)

The prefix **M** on the component connected to cable No.5 (**M**.M005), indicates that the component is mounted on the machine.

- Go to the chapter **Component location,** to find the position of the component (M005)

Note! **All** the examples in "**Electrical documents guide"** are composed only to demonstrate, and have nothing to do with the distribution equipment this TeM handles.

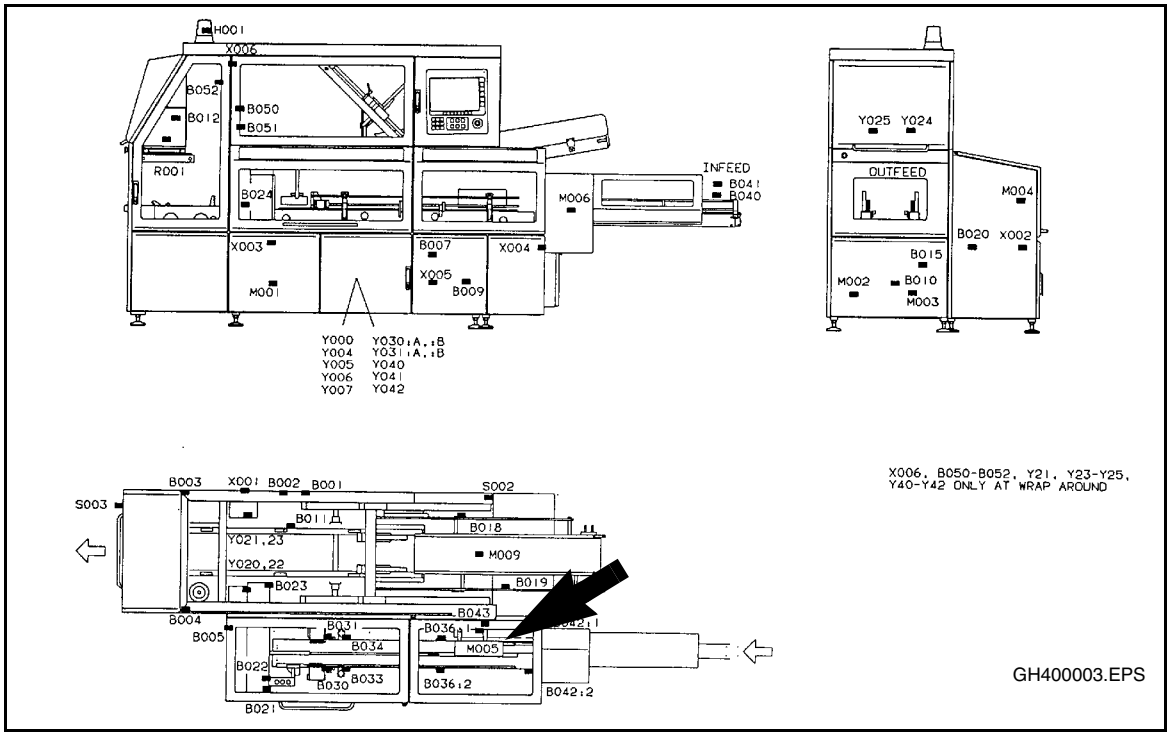

Component location

2.2TH601362en.fm

6

How to trace a component

Example: How to trace sensor B011

- Go to the chapter **Circuit diagrams**
- Go to the **Position summary** (first sheet(s) in the **Circuit diagrams**)

The sheet No. (sheet 17) is located opposite the component No (pos M.B011). This tells you on which sheet in the **Circuit diagrams** the connection is shown.

- Go to sheet 17 in the **Circuit diagrams**
- Find the component (M.B011)
- Note the connections (X004, 21-23)
- Go to the chapter **Mains & connection diagrams**
- Find the connection (X004 21-23)

The **Connection diagrams** shows how the sensor is connected (e.g. via a connection box).

The input (%I0042) is a reference to the PLC-listing in the section **Program documents.**

Note! **All** the examples in "**Electrical documents guide"** are composed only to demonstrate, and have nothing to do with the distribution equipment this TeM handles.

(Cont'd)

2.2TH601362en.fm

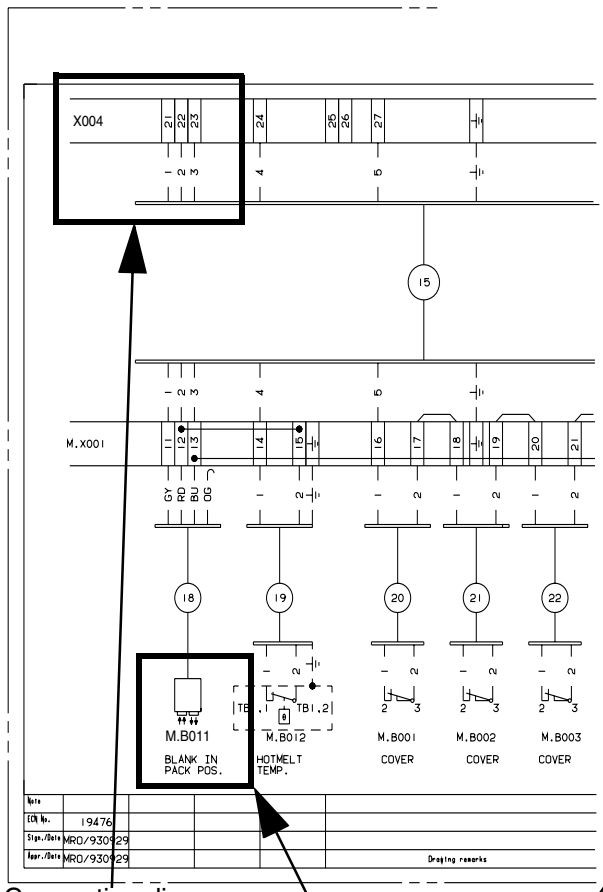

Connection diagram

Pos	Sheet	Pos	Sheet	Pc
X007	08			
Z001	10	M.B018	17	M.
		M.B019	17	M.
		M.B020	16	M.
		M.B021	16	
		M.B022	16	
		M.B023	16	M.
M.B001	10	M.B024	16	M.
M.B002	10			M.
M.B003	10			
M.B004	10	M.B030	18	
M.B005	10	M.B031	18	M.
M.B007	13	M.B033	18	
M.B008	10	M.B034	18	M.
M.B009	14			M.
M.B010	15	M.B036	18	M.
M.B011	17			M.
M.B012	17			M.
M.B013	17	M.B040	19	M.
M.B014	17	M.B041	19	
M.B015	18	M.B042	19	
		M.B043	19	M.

Description: **Position summary**

Tetra Cardboard Packer 70 44161-02:05

Position summary

GAD00008.EPS

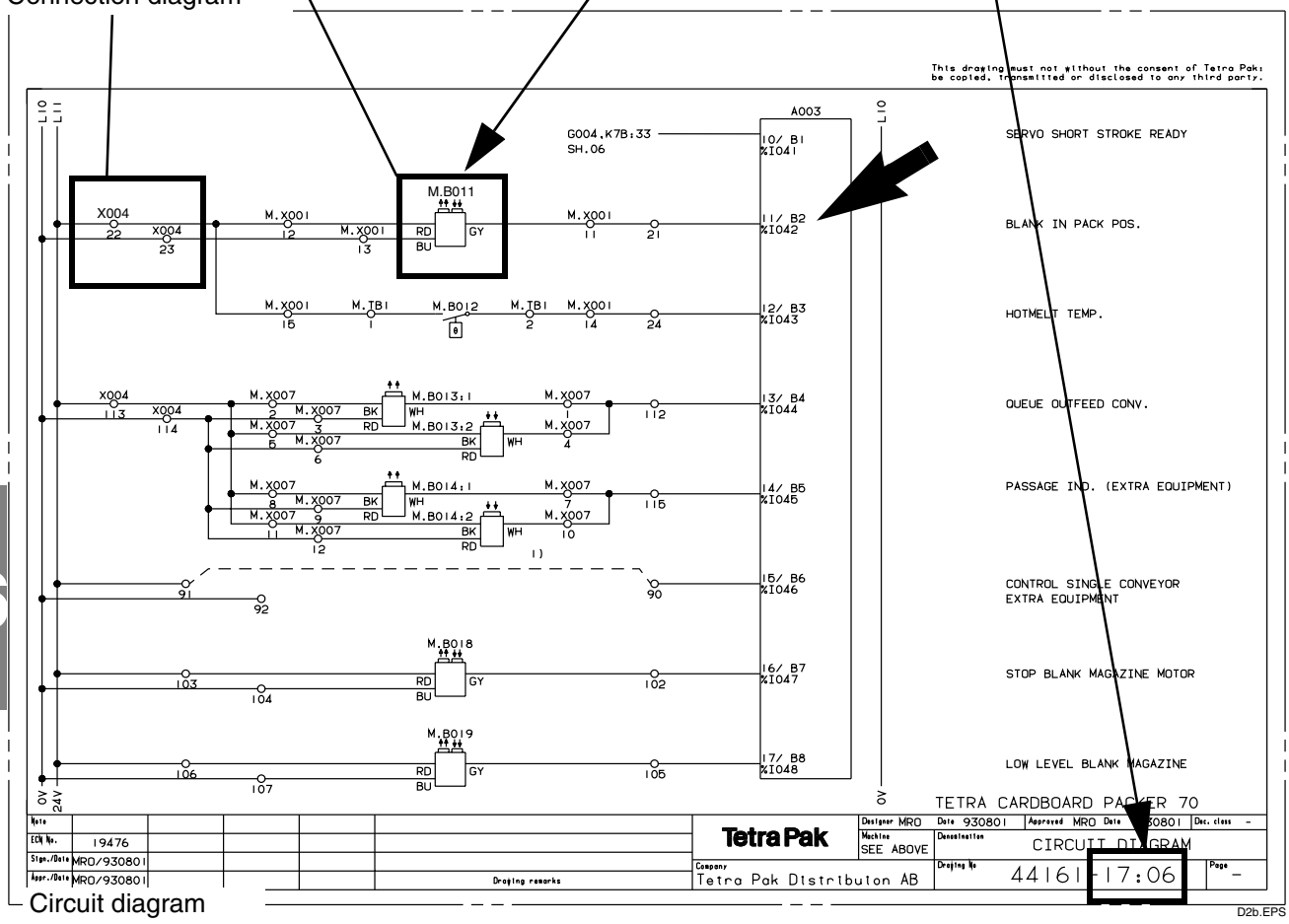

Circuit diagram

2.2TH601362en.fm

6

(Cont'd)

- Go to the chapter **Program documents** to see the use in the program
- Go to the Cross reference list at the end of the PLC-listing and find the input (%I0042)
- Note the rung Nos. in which the inputs are used (e.g. rung 211)
- Go to the PLC-listing and find rung 211

Note! **All** the examples in "**Electrical documents guide"** are composed only to demonstrate, and have nothing to do with the distribution equipment this TeM handles.

2.2TH601362en.fm

```
03-04-94  15:06          GE FANUC SERIES 90-30/90-20 DOCUMENTATION (v3.50)
                                Tetra Cardboard Packer 70 med
                              47796-01:01 940204 MRO ECN:19476

REF.     NICKNAME  REF. DESCRIPTION / CROSS REFERENCES
-------  --------  ------------------------------------
                   -]/[- 34
%I0029             Gray code Feeding motor
                   -] [- 33
                   -]/[- 33
%I0030             Gray code Feeding motor
                   -] [- 32
                   -]/[- 32
%I0031             Gray code Feeding motor
                   -] [- 31
                   -]/[- 31
%I0032             Gray code Feeding motor
                   -] [- 30
%I0033   B020      Flap upper pos.
                   -] [- 248,250
                   -]/[- 226,232
%I0035   B022      Pusher zero pos.
                   -] [- 215,229
%I0036   B023      Pusher end limit pos.
                   -] [- 317
%I0037   B024      Endstop inner pos.
                   -] [- 225
%I0038             Servo synchr. home pos.
                   -] [- 26,203,219,226,232,237
                   -]/[- 316
%I0039             Servo alarm
                   -] [- 210,317,352
%I0040             Servo long stroke ready
                   -] [- 228,234,265,287,390,391
                   -]/[- 207,211
%I0041             Servo short stroke ready
                   -] [- 229,287
                   -]/[- 211
%I0042   B011      Blank in pack. pos.
                   -] [- 211,231,257,340
                   -]/[- 233,258,289,343
%I0043   B012      Hotmelt temp.
                   -] [- 23,132,267
                   -]/[- 267,349,351
%I0044   B013      Queue on outfeed conv.
                   -] [- 294,345
%I0045   B014      Passage indic. (extra equip.)
                   -] [- 294
                   -]/[- 293
%I0046             Control single conv.
                   -] [- 140
%I0047   B018      Stop blank magaz. motor
                   -] [- 255
                   -]/[- 256
%I0048   B019      Low level blank magaz.
                   -] [- 334,338
                   -]/[- 334
%I0049   B030      Min. queue lane 1
                   -] [- 148,202
                   -]/[- 150,201,286,287
%I0050   B031      Min. queue lane 2
                   -] [- 163,202
                   -]/[- 165,201,286,287
%I0052   B033      Max queue lane 1
                   -] [- 200
                   -]/[- 145
%I0053   B034      Max queue lane 2
                   -] [- 200
                   -]/[- 160
%I0055   B036      Cross guard wide conv.
                   -] [- 329
                   -]/[- 332
%I0056   B015      Torque limiter Feeding motor
                   -]/[- 322,324
%I0057   B040      Min. queue into brake
                   -] [- 173,325
                   -]/[- 278
%I0058   B041      Fallen package

Program: P477961                                  C:\LM90\P477961
```

Cross reference list

GAD00010.EPS

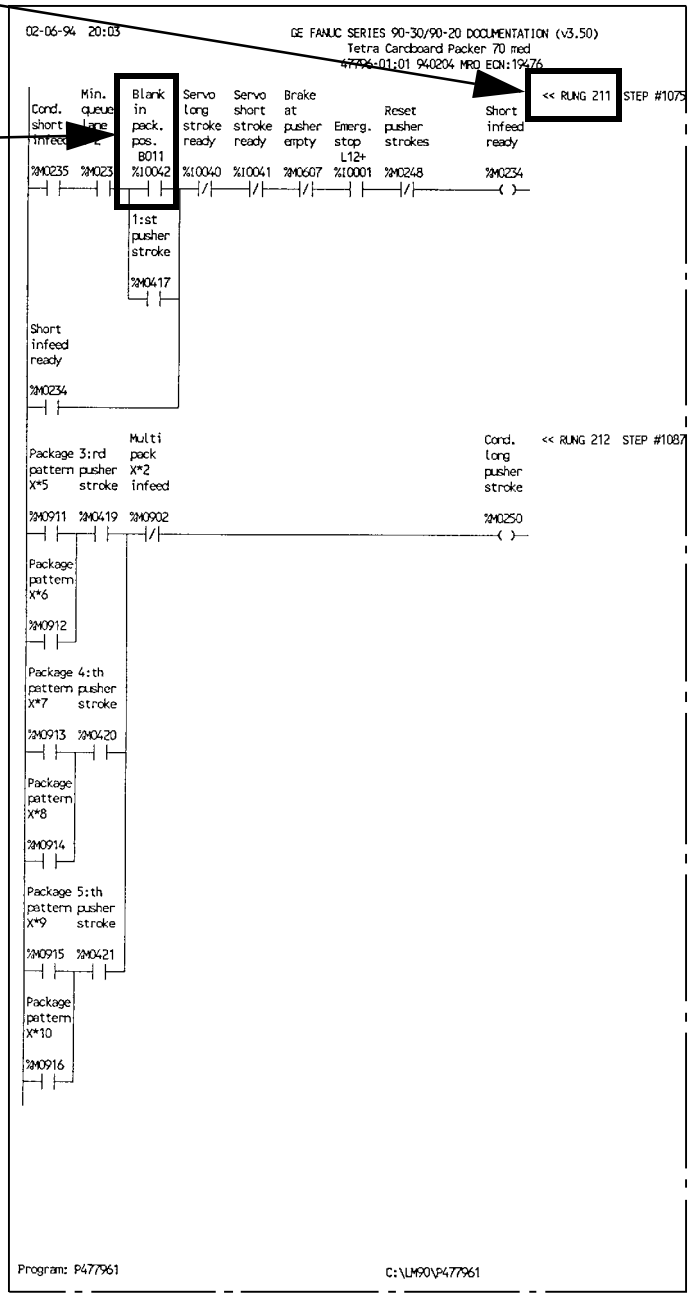

GAD00011.EPS

PLC-listing

2.2TH601362en.fm

6

Supply/line voltage

Supply voltage/Line connection order

The supply voltage in the Electrical cabinet is named:

- L1-L9: Power voltage
- L10-LXX:Control voltage

L10 is reserved for 0V, control voltage.

L11 is reserved for 24V, control voltage.

Line summary (sheet 90) in the **Circuit diagrams** shows the line connection order with a cross reference to the valid circuit diagram for each connection (See example next side).

Note! **All** the examples in "**Electrical documents guide"** are composed only to demonstrate, and have nothing to do with the distribution equipment this TeM handles.

2.2TH601362en.fm

Line	Contact		Sheet	Area	Colour
L10	XL10	8		0.75mm2	BU
	A006	10	22		
	A006	20	23		
	XL10	9			
	A007	10	24		
	A007	20	25		
	XL10	10			
	A008	10	26		
	A008	20	27		
	XL10	11			
	A009	10	28		
	XL10	12			
	G002	11	05		
	G003	11	05		
	P001	-	25		
	XL10	13			
	K001	A1	25		
	K002	A1	22		
	K003	A1	22		
	K004	A1	24		
	K005	A1	22		
	K006	A1	24		
	V001	A1	26		
	XL10	14			
	K009	A1	25		
	K010	A1	26		
	G004,K7	24	06		

Line	Contact		Sheet	Area	Colour
L10	XL10	15			
	X004	2	14		
	X004	12	15		
	X004	23	17		
	X004	31	25		
	X004	64	27		
	X004	65	34		
	XL10	16			
	X004	68	16		
	X004	81	18		
	X004	92	17		
	X004	95	18		
	X004	98	19		
	X004	101	19		
	XL10	17			
	X004	104	17		
	X004	107	17		
	X004	114	17		
	X004	119	26		
	X004	122	23		
	X004	147	13		
	XL10	18			
	X004	150	26		
	X004	153	19		
	X004	164	20		
	X004	171	28		
	X004	177	26		

Introd.AM	19476	Date 940224 MRO	
Am No			
Date			
Sign			Drawing remarks

Description: **Line summary**

Tetra Cardboard Packer 70 | 44161-90:05 | Page: 2 Cont: 3

Line summary

GAD00012.EPS

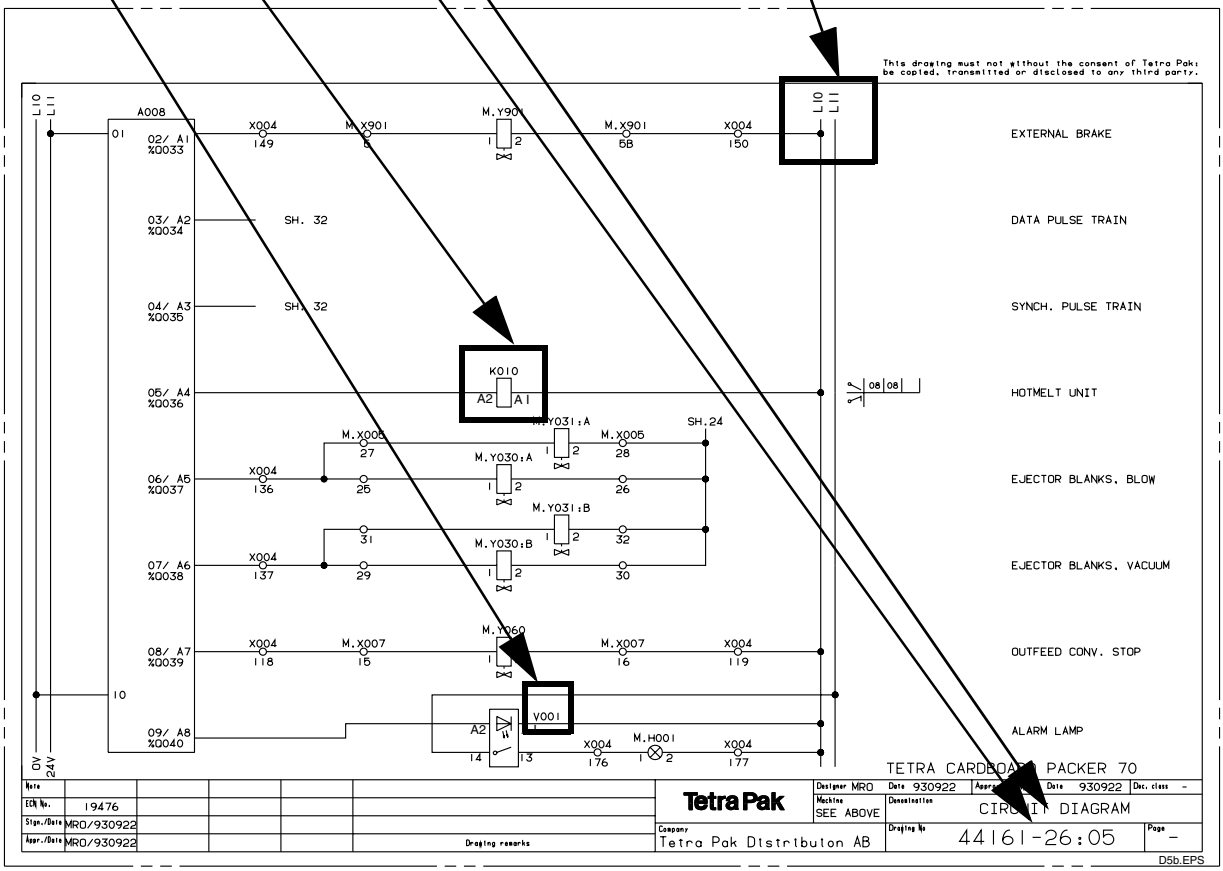

Circuit diagram

2.2TH601362en.fm

6

How to trace a terminal

Example: Connection in connection box M.X005, terminal 11-12

- Go to the chapter **Mains & connection diagrams**
- Find the connection box (M.X005 terminal block 11-12)
- Note the component connected (M.Y004)
- Go to the chapter **Circuit diagrams**
- Go to the **Position summary** (first sheet(s) in the **Circuit diagrams**)

The sheet No. (sheet 23) is located opposite the component No (Pos M.Y004). This tells you on which sheet in the **Circuit diagrams** the connection is shown.

- Go to sheet 23 in **Circuit diagrams**
- Find the component (M.Y004)

The output (%Q0014) is a reference to the PLC-listing in chapter **Program documents.**

Note! **All** the examples in "**Electrical documents guide"** are composed only to demonstrate, and have nothing to do with the distribution equipment this TeM handles.

(Cont'd)

2.2TH601362en.fm

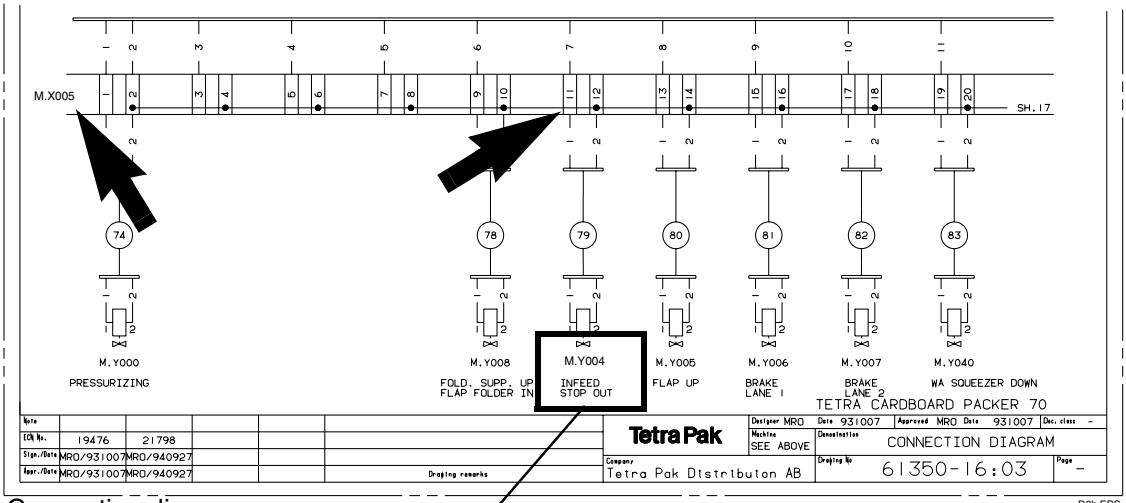

Connection diagram

Pos	Sheet	Pos	Sheet	Pos	Sheet	Pos	Sheet	Pos	Sheet	Pos	Sheet
						P.H001	32	P.H025	34		
		M.Y020	25			P.H002	32	P.H026	34	P.S01H	12
		M.Y021	25	M.Y060	26	P.H003	32	P.H027	34	P.S02H	12
M.R001	08	M.Y022	28					P.H028	34	P.S03H	12
		M.Y023	28					P.H029	27	P.S04H	12
		M.Y024	28	M.Y901	26	P.H006	33	P.H030	27		
		M.Y025	28			P.H007	33	P.H031	27		
M.S002	10					P.H008	33	P.H032	27	P.S07H	12
M.S003	10					P.H009	33	P.H033	27	P.S08H	13
						P.H010	33	P.H034	27	P.S09H	13
		M.Y030:A	26			P.H011	33	P.H035	27	P.S10H	13
		M.Y030:B	26								
M.Y000	23	M.Y031:A	26								
		M.Y031:B	26			P.H014	32	P.H01S	33		
						P.H015	32	P.H02S	33		
						P.H016	32	P.H03S	33		
		M.Y040	28			P.H017	32	P.H04S	33		
M.Y004	23	M.Y041	28			P.H018	32				
M.Y005	23	M.Y042	28	P.A021	12	P.H019	32				
M.Y006	23			P.A022	32	P.H020	34				
M.Y007	24					P.H021	34	P.S001	10		
M.Y008	23					P.H022	34				
						P.H023	34				
						P.H024	34				
Introd.AM	19476	Date 940224	MRO			Description:		Position summary			
Am No											
Date						Tetra Cardbo		acker 70	44161-02:05		Page: 2
Sign				Drawing remarks							Cont: -

Position summary

GAD00015.EPS

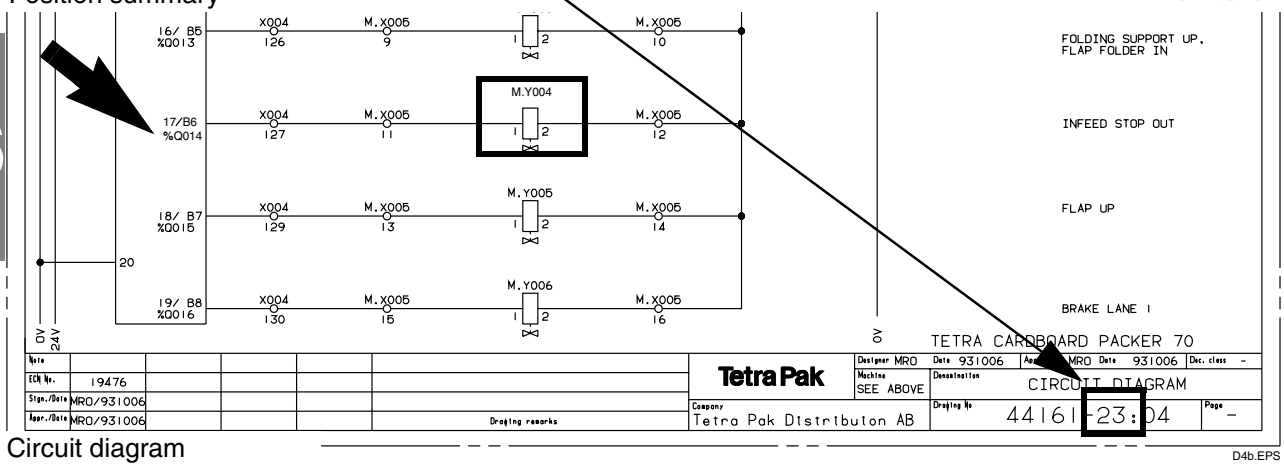

Circuit diagram

6

2.2TH601362en.fm

(Cont'd)

The prefix M indicates that the component is mounted on the machine.

- Go to the chapter **Component location** to find the position of the component (Y004) on the machine
- Go to the chapter **Program documents** to see the use in the program
- Go to Cross reference list at the end of PLC-listing and find the output (%Q0014)

Note! **All** the examples in "**Electrical documents guide"** are composed only to demonstrate, and have nothing to do with the distribution equipment this TeM handles.

2.2TH601362en.fm

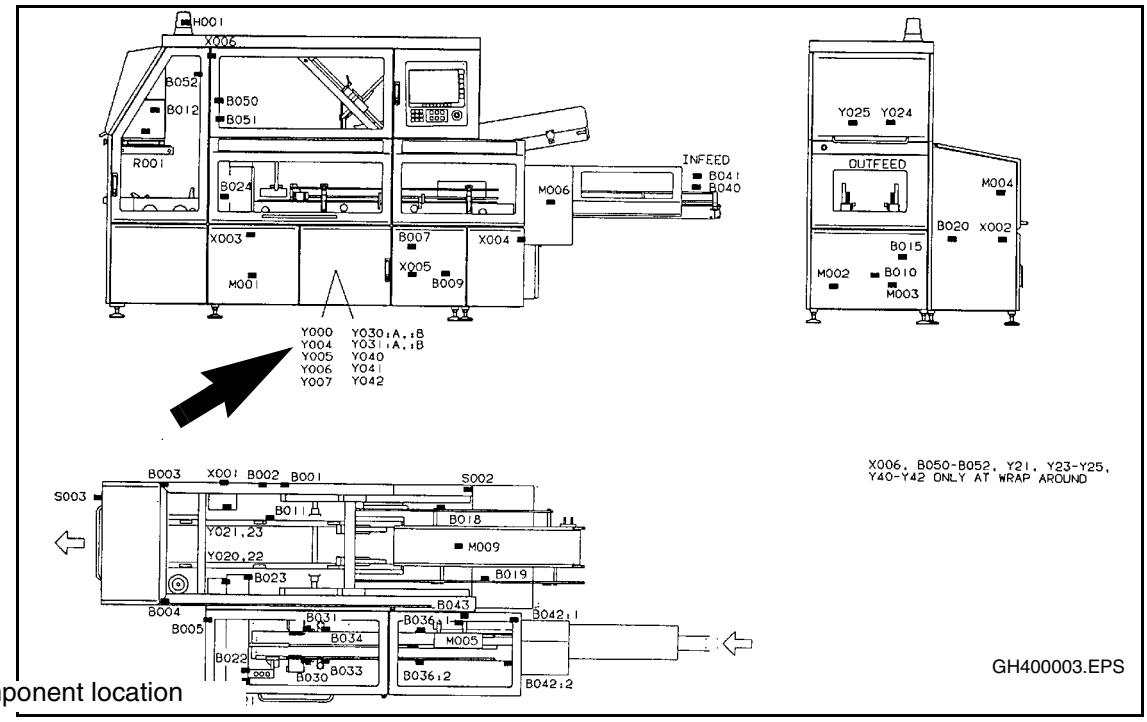

Component location

```
03-04-94  15:06                    GE FANUC SERIES 90-30/90-20 DOCUMENTATION (v3.50)
                                          Tetra Cardboard Packer 70 med
                                          47796-01:01 940204 MRO EON:19476

REF.     NICKNAME   REF. DESCRIPTION / CROSS REFERENCES
-------  --------   ----------------------------------
                    -]/[- 325
%I0059   B042       Package counter
                    -] [- 175,177,197
                    -]/[- 197
%I0060   B043       Divider in pos.
                    -] [- 26,192
                    -]/[- 198
%I0062   B200       Pack. on single conv.
                    -]/[- 140
%I0065   B050       WA flap upper pos.
                    -] [- 273
%I0066   B051       WA flap lower pos.
                    -] [- 270
%I0067   B052       WA squeez. upper pos.
                    -] [- 273
                    -]/[- 272

================================================================================
========== OUTPUT  (%Q)  CROSS REFERENCES
================================================================================
REF.     NICKNAME   REF. DESCRIPTION / CROSS REFERENCES
-------  --------   ----------------------------------
%Q0001   K002       Main shaft motor
                    -( )  138
%Q0002   K003       Feeding motor
                    -( )  138
%Q0003   G002_2     Main shaft high speed
                    -] [- 248,250
                    -( )  248
%Q0004   G002_7     Main shaft start
                    -] [- 237,253,290,334,335
                    -]/[- 241,289
                    -( )  248
%Q0005   G003_2     Feeding motor high speed
                    -( )  251
%Q0006   G003_7     Feeding motor start
                    -] [- 132,237,250,251,321
                    -]/[- 230,232
                    -( )  250
%Q0007   K005       Lane divider
                    -] [- 193,198
                    -]/[- 189
                    -( )  198
%Q0009   Y000       Pressu.
                    -( )  134
%Q0013   Y008       Folding support down
                    -( )  239
%Q0014   Y004       Infeed stop out
                    -( )  219
%Q0015   Y005       Flap up
                    -( )  237
%Q0016   Y006       Brake lane 1
                    -] [- 142,206,209,216,217,218
                    -]/[- 225
                    -( )  216
%Q0017   K006       Belt brake
                    -( )  135
%Q0018   K16_K26    Belt brake
                    -] [- 154,167,180,183,185,186,190,197,281
                    -]/[- 187,188,280
                    -( )  190
%Q0019   K004       Servo motor pusher
                    -] [- 222,223
                    -]/[- 221
                    -( )  222
```

Cross reference list

GAD00004.EPS

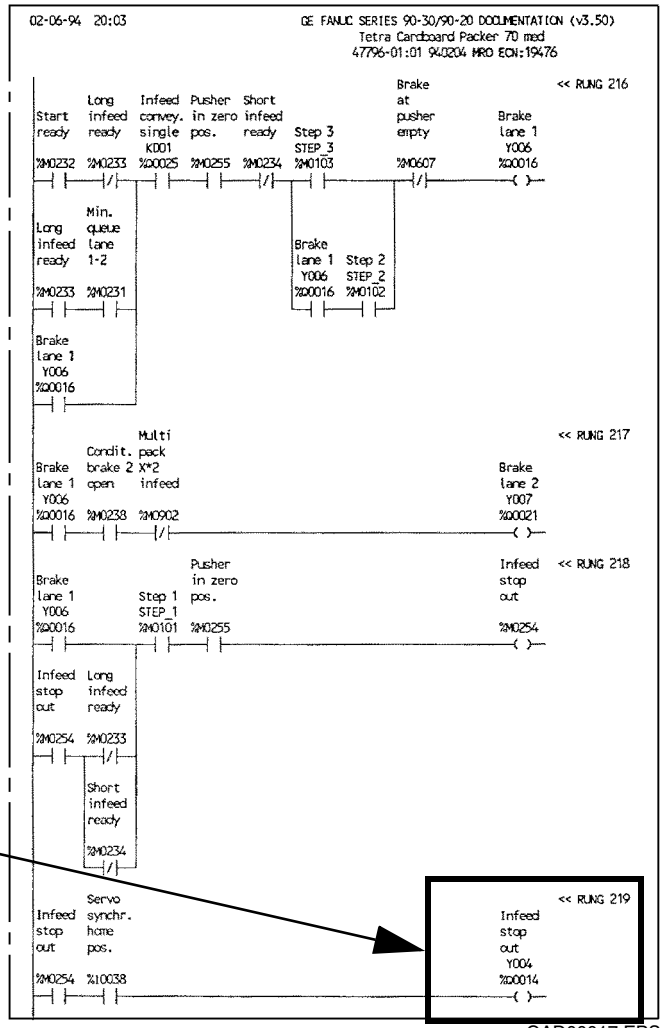

PLC-listing

GAD00017.EPS

2.2TH601362en.fm

6

7 Table of contents for electrical documents

2.2TH601381en.fm

About this chapter

Note! This chapter consists of the list “Electrical document” which have the function as a table of contents for all the electrical documents included in this TeM manual. For more detailed information see Chapter 7 “Table of contents for electrical documents” on page 126.

2.2TH601381en.fm

8 Spare parts

2.2TH601381en.fm

Note! For table of contents, see chapter 7 (Table of contents for electrical documents).

2.2TH601381en.fm

General remark

TETRA EASY RIDE PLUS

ECM P85621(L85619)
Release date **

Variant: Column Global dependency

ZA	MOUNTED ON FRAME
ZB	NOT MOUNTED ON FRAME

ChgPosition	Sp	SH	Description	As	Size	Identity	DTp	Prt	Vs	Unit	Column quantity All	ZA	ZB
0010			MOUNTING DRAWING	A4	-	53073-0005	ELD	001	AA			x	-
0020			MOUNTING DRAWING	A4	-	53073-0006	ELD	001	AA			x	-
0030			MOUNTING DRAWING	A4	-	53073-0007	ELD	001	AA			x	-
0040			MOUNTING DRAWING	A4	-	53213-0005	ELD	001	AA			-	x
0050			MOUNTING DRAWING	A4	-	53213-0006	ELD	001	AA			-	x
0060			MOUNTING DRAWING	A4	-	53213-0007	ELD	001	AA			-	x
0080	B	30000	CABINET			1368108-0100				PC	1		
0100	B	30000	FUSE PANEL SIGN	A4		1366850-0000				PC	1		
0200	B	30000	Delivered design	A4		1366851-0000				PC	1		
1000	B	30000	DISPLAY	A1		583431-0000				PC	1		
1010	B	30000	DISCETTE BOX	A4		90031-0304				PC	1		
1020	B	30000	Sign, Identification of Wiring	A3		90194-0080				PC	1		
1030	B	30000	Sign, Flash, Electric Equipment Symbol			90194-0016				PC	2		
1160	B	30000	CABLE GLAND ST 7			352103-0096				PC		20	-
1170	B	30000	NUT PR 12,5 (PG7)			90099-0116				PC	20		
1180	B	30000	BLANK-OFF PLUG 12,5			90002-0018				PC		-	20
1190	B	30000	CABLE GLAND ST			352103-0101				PC		8	-

ChgPosition	Sp	SH	Description	As	Size	Identity	DTp	Prt	Vs	Unit	Column quantity All	ZA	ZB
			9;PR15,2/PG9										
1200	B	30000	NUT PR 15,2 BRASS	A4		90099-0001				PC	8		
1205	B	30000	BLANK-OFF PLUG 15,2			90002-0013				PC		-	8
1210	B	30000	CABLE GLAND ST 11			352103-0106				PC	2		
1220	B	30000	NUT Pr 18,6 Brass			90099-0002				PC	2		
1225	B	30000	BLANK-OFF PLUG 18.6			90002-0009				PC	2		
1230	B	30000	CABLE GLAND ST 16			352103-0111				PC	7		
1240	B	30000	NUT			90099-0003				PC	7		
1250	B	30000	BLANK-OFF PLUG 22,5			90002-0004				PC	1		
1260	B	30000	CABLE GLAND ST 21			352103-0116				PC		-	3
1261	B	30000	CABLE GLAND ST 21			352103-0116				PC		2	-
1271	B	30000	NUT			90099-0004				PC	3		
1275	B	30000	BLANK-OFF PLUG 28,3			90002-0012				PC		1	-
A002	A	20000	PLC,Digital Input Module,fast ,16pt,+/-			90031-0058				PC	1		
A003	A	20000	PLC,Digital Input Module,fast ,16pt,+/-			90031-0058				PC	1		
A004	A	20000	PLC,Digital Input Module,fast ,16pt,+/-			90031-0058				PC	1		
A005	A	20000	PLC,Digital Input Module,fast ,16pt,+/-			90031-0058				PC	1		
A006	A	30000	PLC,Digital Output Module,24VDC,16pt,+/-			90031-0059				PC	1		
A007	A	20000	PLC,Digital Output Module,24VDC,16pt,+/-			90031-0059				PC	1		
A008	A	20000	PLC,Digital Output Module,24VDC,16pt,+/-			90031-0059				PC	1		
A009	A	20000	PLC,Digital Output			90031-0059				PC	1		

ChgPosition	S p	S H	Description	A s	Si ze	Identity	DTp	Prt	Vs	Un it	Column quantity All	ZA	ZB
			Module,24VDC,16pt,+/-										
A060	A	30000	Baseplate 10-Slot			90031-0051				PC	1		
D001	A	30000	CPU363, Serial communication		A2	90031-0075				PC	1		
F001	A	30000	FUSE 1P 6A K			90007-0128				PC	1		
F002	A	30000	FUSE 1P 6A K			90007-0128				PC	1		
F003	A	30000	FUSE 1P 6A K			90007-0128				PC	1		
F004	A	30000	EARTH FAULT BREAKER		A3	90111-0172				PC	1		
F011	A	30000	FUSE 1P 10A K			90007-0129				PC	1		
F012	A	30000	FUSE 1P 10A K			90007-0129				PC	1		
F013	A	30000	FUSE 1P 10A K			90007-0129				PC	1		
F014	A	30000	FUSE 1P 10A K			90007-0129				PC	1		
F015	A	30000	FUSE 1P 10A K			90007-0129				PC	1		
F016	A	30000	FUSE 1P 10A K			90007-0129				PC	1		
F091	A	30000	FUSE 1P 6A K			90007-0128				PC	1		
F092	A	30000	FUSE 1P 6A K			90007-0128				PC	1		
G001	A	20000	POWER SUPPLY,24VDC/4,2A,OMRON S82K		A2	90246-0028				PC	1		
G011	A	25000	Freq.conv. 3G3EV-AB007MA-CUE		A4	90430-0078				PC	1		
G011.1	B	30000	Panel 3G3EV-PSVOP120-E		A4	90430-0333				PC	1		
G012	A	25000	Freq.conv. 3G3EV-AB007MA-CUE		A4	90430-0078				PC	1		
G012.1	B	30000	Panel 3G3EV-PSVOP120-E		A4	90430-0333				PC	1		
G013	A	25000	Freq.conv. 3G3EV-AB007MA-CUE		A4	90430-0078				PC	1		
G013.1	B	30000	Panel 3G3EV-PSVOP120-E		A4	90430-0333				PC	1		

ChgPosition	Sp	SH	Description	As	Size	Identity	DTp	Prt	Vs	Unit	Column quantity All	ZA	ZB
G014	A	25000	Freq.conv. 3G3EV-AB007MA-CUE		A4	90430-0078				PC	1		
G014.1	B	30000	Panel 3G3EV-PSVOP120-E		A4	90430-0333				PC	1		
G015	A	25000	Freq.conv. 3G3EV-AB007MA-CUE		A4	90430-0078				PC	1		
G015.1	B	30000	Panel 3G3EV-PSVOP120-E		A4	90430-0333				PC	1		
G016	A	25000	Freq.conv. 3G3EV-AB007MA-CUE		A4	90430-0078				PC	1		
G016.1	B	30000	Panel 3G3EV-PSVOP120-E		A4	90430-0333				PC	1		
G060	A	20000	PLC, Power supply 240 VAC, High cap.	Y		90031-0068				PC	1		
H001	B	30000	SIGNAL LAMP RED			90064-0101				PC	1		
H001.1	B	30000	LIGHT BULB BA9S 28V			90036-0057				PC	1		
H001.2	B	30000	Button Sign, Stop			359301-0106				PC	1		
H002	B	30000	SIGNAL LAMP RED			90064-0101				PC	1		
H002.1	B	30000	LIGHT BULB BA9S 28V			90036-0057				PC	1		
H002.2	B	30000	SIGN "MOTOR PROTECTION"			359301-0065				PC	1		
H003	B	30000	SIGNAL LAMP RED			90064-0101				PC	1		
H003.1	B	30000	LIGHT BULB BA9S 28V			90036-0057				PC	1		
H003.2	B	30000	SIGN "SECURITY OFF"			359301-0115				PC	1		
H101	B	30000	BASE KT70-1001		A3	90458-0292				PC		1	-
H101.1	B	30000	LIGHT ELEMENT KL70-401R		A3	90458-0293				PC		1	-
H101.2	B	30000	LIGHT ELEMENT YELLOW KL70-401Y		A3	90458-0294				PC		1	-
H101.3	B	30000	LIGHT ELEMENT GREEN KL70-401G		A3	90458-0296				PC		1	-

ChgPosition	Sp	SH	Description	As	Size	Identity	DTp	Prt	Vs	Unit	Column quantity All	ZA	ZB
H101.4	B	30000	Base with tube 110 mm KA70-1011		A3	90458-0297				PC		1	-
H101.5	B	30000	BULB 6.5W 24V		A4	90036-0068				PC		3	-
K001	A	25000	CONTACTOR 4KW COIL 24VDC			90075-0127				PC	1		
K011	A	25000	CONTACTOR 4KW COIL 24VDC			90075-0127				PC	1		
K012	A	30000	CONTACTOR 4KW COIL 24VDC			90075-0127				PC	1		
K080	A	30000	RELAY OMRON G2R-2-SNI-24DC	Y	A3	90119-0108				PC	1		
K081	A	30000	RELAY OMRON G2R-2-SNI-24DC	Y	A3	90119-0108				PC	1		
K082	A	30000	RELAY OMRON G2R-2-SNI-24DC	Y	A3	90119-0108				PC	1		
K083	A	30000	RELAY OMRON G2R-2-SNI-24DC	Y	A3	90119-0108				PC	1		
K084	A	30000	RELAY OMRON G2R-2-SNI-24DC	Y	A3	90119-0108				PC	1		
K097	A	25000	CONTACTOR 4KW COIL 24VDC		A3	90075-0143				PC	1		
K098	A	25000	CONTACTOR 4KW COIL 24VDC		A3	90075-0143				PC	1		
M001	A	30000	FAN PAPST 220V;18W			90264-0032				PC	1		
Q000	A	30000	SWITCH			90111-0132				PC	1		
Q000.1	B	30000	Sign, Main Switch			359241-0124				PC	1		
Q000.2	B	30000	Sign Holder for 359240-0001		A2	359240-0100				PC	1		
Q011	A	30000	OVERLOAD PROTECTION		A2	90095-0073				PC	1		

ChgPosition	Sp	SH	Description	As	Size	Identity	DTp	Prt	Vs	Unit	Column quantity All	ZA	ZB
			PKZM 1,6A										
Q011.1	A	30000	AUX.CONTACT K&M NHI 11-PKZ0		A3	90259-0317				PC	1		
Q012	A	30000	OVERLOAD PROTECTION PKZM 1,6A		A2	90095-0073				PC	1		
Q012.1	A	30000	AUX.CONTACT K&M NHI 11-PKZ0		A3	90259-0317				PC	1		
S001	A	30000	CIRCUIT CLOSER			90111-0148				PC	1		
S099	A	30000	SWITCH,EMERGENCY STOP			90064-0124				PC	1		
S099.1	B	30000	SIGN "EMERGENCY STOP"		A4	486826-0001				PC	1		
S20H	B	30000	PUSH BUTTON WHITE	Y		90064-0082				PC	1		
S20H.1	B	30000	SIGN "UP"			359301-0001				PC	1		
S21H	B	30000	PUSH BUTTON WHITE	Y		90064-0082				PC	1		
S21H.1	B	30000	SIGN "DOWN"			359301-0005				PC	1		
S22H	B	30000	PUSH BUTTON WHITE	Y		90064-0082				PC	1		
S22H.1	B	30000	Button Sign, Lamp Test / Alarm Res.			359301-0131				PC	1		
X007	A	30000	WALL SOCKET		A3	90001-0039				PC	1		
Z000	A	25000	Power Line Filter		A3	90024-0049				PC	1		
Z011	B	30000	Filter 3G3EV-PFI1015-E		A4	90430-0331				PC	1		
Z012	B	30000	Filter 3G3EV-PFI1015-E		A4	90430-0331				PC	1		
Z013	B	30000	Filter 3G3EV-PFI1015-E		A4	90430-0331				PC	1		
Z014	B	30000	Filter 3G3EV-PFI1015-E		A4	90430-0331				PC	1		
Z015	B	30000	Filter 3G3EV-PFI1015-E		A4	90430-0331				PC	1		
Z016	B	30000	Filter 3G3EV-PFI1015-E		A4	90430-0331				PC	1		
Z031	B	30000	Ferrite		A4	90024-0064				M	1		
Z032	B	30000	Ferrite		A4	90024-0064				M	1		

ChgPosition	Sp	SH	Description	As	Size	Identity	DTp	Prt	Vs	Unit	Column quantity All	ZA	ZB
Z033	B	30000	Ferrite	A4		90024-0064				M	1		
Z034	B	30000	Ferrite	A4		90024-0064				M	1		
Z035	B	30000	Ferrite	A4		90024-0064				M	1		
Z036	B	30000	Ferrite	A4		90024-0064				M	1		
Z037	B	30000	Ferrite	A4		90024-0064				M	1		
Z038	B	30000	Ferrite	A4		90024-0064				M	1		
Z039	B	30000	Ferrite	A4		90024-0064				M	1		
Z040	B	30000	Ferrite	A4		90024-0064				M	1		
Z041	B	30000	Ferrite	A4		90024-0064				M	1		
Z042	B	30000	Ferrite	A4		90024-0064				M	1		

General remark

TETRA EASY RIDE PLUS
CABLE: 1102-1104, 1109, 1110, 1112,
1113, 1115-1118, 1121-1124,
1127-1130, 1133-1136
IS SUPPLIED WITH THEIR COMPONENTS.

ECM P85622(L85619)
Release date **

Variant: Column Global dependency

ZA	LAYOUT1
ZB	LAYOUT2
ZC	LAYOUT3
ZD	LAYOUT4

ChgPosition	Sp	SH	Description	As	Size	Identity	DTp	Prt	Vs	Unit	Column quantity All	ZA	ZB	ZC	ZD
B101	B	30000	COVER		A3	1289381-0000				PC		-	2	2	2
B101	A	20000	QUEUE GUARD, Single w attachm B50-R109	X		1359042-0103				PC		-	1	1	1
B102	B	30000	COVER		A3	1289381-0000				PC		-	2	2	2
B102	A	20000	QUEUE GUARD, Single w attachm B50-R109	X		1359042-0103				PC		-	1	1	1
B113	B	30000	COVER		A3	1289381-0000				PC		-	-	2	2
B113	A	20000	QUEUE GUARD, Single w attachm B50-R109	X		1359042-0103				PC		-	-	1	1
B114	B	30000	COVER		A3	1289381-0000				PC		2	2	2	2
B114	A	20000	QUEUE GUARD, Single w attachm B50-R109	X		1359042-0103				PC		1	1	1	1
B115	B	30000	COVER		A3	1289381-0000				PC		-	-	2	-
B115	A	20000	QUEUE GUARD, Single w attachm B50-R109	X		1359042-0103				PC		-	-	1	-

ChgPosition	Sp	SH	Description	As	Size	Identity	DTp	Prt	Vs	Unit	Column quantity All	ZA	ZB	ZC	ZD
B131	B	30000	COVER		A3	1289381-0000				PC		-	-	-	2
B131	A	20000	QUEUE GUARD, Single w attachm B50-R109	X		1359042-0103				PC		-	-	-	1
B132	B	30000	COVER		A3	1289381-0000				PC		-	-	-	2
B132	A	20000	QUEUE GUARD, Single w attachm B50-R109	X		1359042-0103				PC		-	-	-	1
B151	A	20000	GATE INDICATION			539536-0502				PC		-	-	1	1
W0101	A	25000	Scr. Cable 4x1,5 mm2			90220-0104				M		-	15	15	15
W0111	B	30000	Cable Olflex 4x1,5 mm2 light/grey			351150-0413				M		-	-	-	25
W1101	B	30000	Cable Olflex 5x0,75 mm2 light/grey			351150-0405				M		-	-	7	7
W1105	B	30000	Cable Olflex 5x0,75 mm2 light/grey			351150-0405				M		15	-	-	-
W1105	B	30000	Cable Olflex 5x0,75 mm2 light/grey			351150-0405				M		-	20	20	20
W1106	B	30000	Cable Olflex 5x0,75 mm2 light/grey			351150-0405				M		-	-	20	20
W1107	B	30000	Cable Olflex 3x0,75 mm2 light/grey			351150-0403				M	0				
W1108	B	30000	Cable Olflex 4x0,75 mm2 light/grey			351150-0404				M		5	-	-	-
W1108	B	30000	Cable Olflex 4x0,75 mm2 light/grey			351150-0404				M		-	15	15	15
W1111	B	30000	Cable Olflex 4x0,75 mm2 light/grey			351150-0404				M		-	-	15	-
W1114	B	30000	Cable Olflex 7x0,75 mm2 light/grey			351150-0406				M		-	7	7	7

ChgPosition	Sp	SH	Description	As	Size	Identity	DTp	Prt	Vs	Unit	Column quantity All	ZA	ZB	ZC	ZD
W1119	B	30000	Cable Olflex 3x0,75 mm2 light/grey			351150-0403				M		-	2	2	2
W1120	B	30000	Cable Olflex 7x0,75 mm2 light/grey			351150-0406				M	0				
W1125	B	30000	Cable Olflex 3x0,75 mm2 light/grey			351150-0403				M	0				
W1126	B	30000	Cable Olflex 7x0,75 mm2 light/grey			351150-0406				M	0				
W1131	B	30000	Cable Olflex 3x0,75 mm2 light/grey			351150-0403				M	0				
W1132	B	30000	Cable Olflex 7x0,75 mm2 light/grey			351150-0406				M		-	-	-	20
W1137	B	30000	Cable Olflex 3x0,75 mm2 light/grey			351150-0403				M		-	-	-	2
W1201	B	30000	Cable Olflex 5x0,75 mm2 light/grey			351150-0405				M		20	20	20	20
W1202	B	30000	Cable Olflex 3x0,75 mm2 light/grey			351150-0403				M	0				
W1203	B	30000	Cable Olflex 3x0,75 mm2 light/grey			351150-0403				M	0				
W1204	B	30000	Cable Olflex 3x0,75 mm2 light/grey			351150-0403				M	0				
X111	B	30000	CONNECTION BOX	X		1381462-0100				PC		-	1	1	1
X114	B	30000	CONNECTION BOX	X		1381558-0100				PC		1	1	1	1
X115	B	30000	CONNECTION BOX	X		1381558-0100				PC		-	-	1	-
X131	B	30000	CONNECTION BOX	X		1381462-0100				PC		-	-	-	1
X151	B	30000	CONNECTION BOX	X		1381462-0100				PC		-	-	1	1
Y991	B	30000	LUBRICATING POINT			534105-0101				PC		-	-	1	1

ChgPosition	Sp	SH	Description	As	Size	Identity	DTp	Prt	Vs	Unit	Column quantity All	ZA	ZB	ZC	ZD
Y991.1	B	30000	NOZZLE	X		534270-0101				PC		-	1	-	-
Y991.1	B	30000	NOZZLE	X		534270-0101				PC		-	-	2	2
Y991.2	B	30000	NOZZLE	X		534270-0102				PC		-	-	2	2
Y991.2	B	30000	NOZZLE	X		534270-0102				PC		-	1	-	-

**********This is the Last Page**********

General remark

TETRA EASY RIDE PLUS

ECM P100081(L85619)
Release date **

ChgPosition	Sp	SH	Description	As	Size	Identity	DTp	Prt	Vs	Unit	Column quantity All
0010			PROGRAMME	A4		39850-0001				PC	1
0010.1			Floppy diskett 3,5"-2D			90025-0041				PC	1
0010.2			LABEL ELECTRICAL EQUIPM.	A4		575453-0000				PC	1
			I t e m t e x t								
			TO BE FILLED IN ACC. TO DS202.50								

**********This is the Last Page**********

General remark

TETRA EASY RIDE PLUS

ECM P85625(L85619)
Release date **

ChgPosition	Sp	SH	Description	As	Size	Identity	DTp	Prt	Vs	Unit	Column quantity All
0020			LIGHT BULB BA9S 28V			90036-0057				PC	2

**********This is the Last Page**********

9 Component location

2.2TH601381en.fm

Note! For table of contents, see chapter 7 (Table of contents for electrical documents).

2.2TH601381en.fm

This drawing must not without the consent of Tetra Pak:
be copied, transmitted or disclosed to any third party.

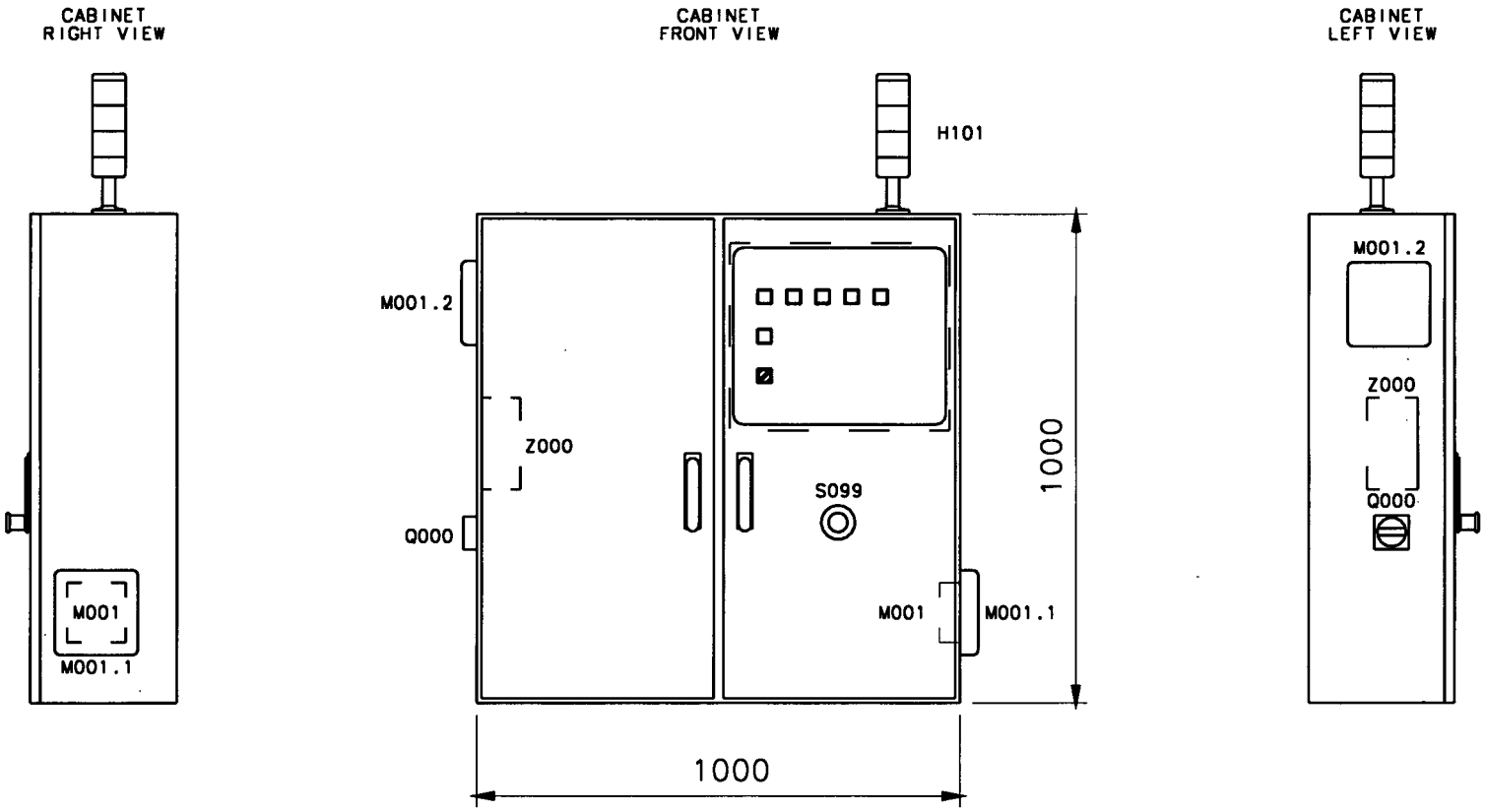

TETRA EASY RIDE PLUS

Note	AA					Tetra Pak	Designer PNO	Date 010101	Approved	Date	Doc. class –
ECN No.	85617						Machine SEE ABOVE	Denomination MOUNTING DRAWING			
Sign./Date	AMM/010101					Company Tetra Brik PS AB		Drawing No 53073-0005			Page –
Appr./Date					Drawing remarks						

This drawing must not without the consent of Tetra Pak:
be copied, transmitted or disclosed to any third party.

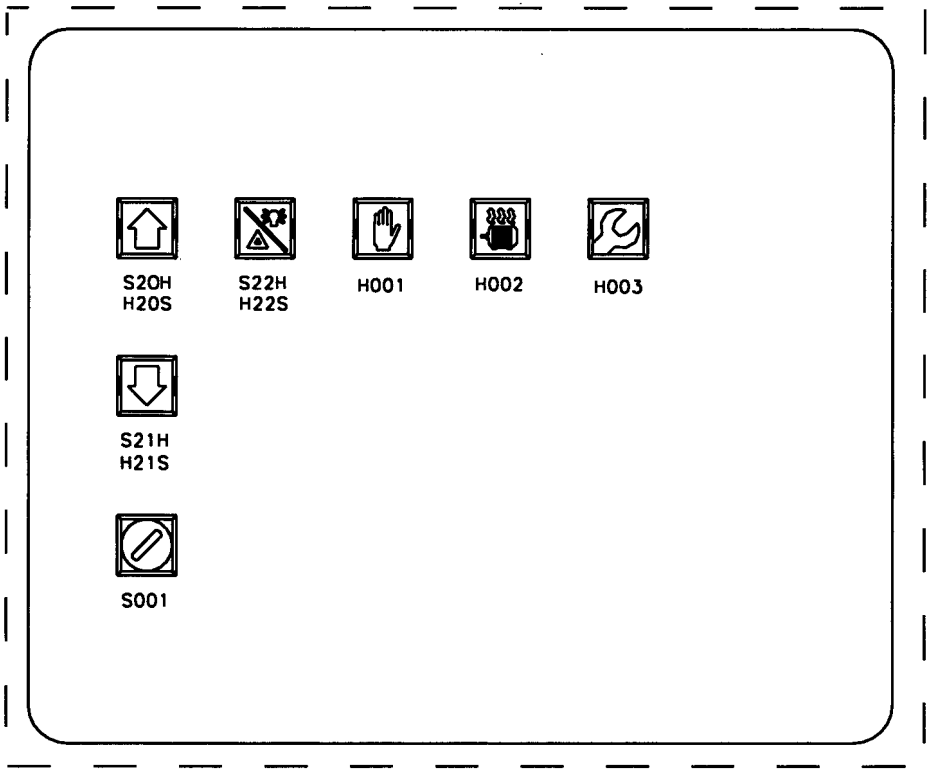

S20H=STEP UP
S21H=STEP DOWN
S22H=RESET ALRM/LAMP TEST
H001=ALARM EMERGENCY STOP
H002=ALARM MOTOR OVERLOAD
H003=ALARM CONVEYOR SWITCH
S001=AUTO/MAN RUN PACKAGE CONVEYOR

TETRA EASY RIDE PLUS

Note	AA					Tetra Pak	Designer PNO	Date 010101	Approved	Date	Doc. class –
ECN No.	85617						Machine SEE ABOVE	Denomination MOUNTING DRAWING			
Sign./Date	AMM/010101					Company Tetra Brik PS AB		Drawing No 53073-0006			Page –
Appr./Date					Drawing remarks						

This drawing must not without the consent of Tetra Pak: be copied, transmitted or disclosed to any third party.

CABINET
INSIDE VIEW

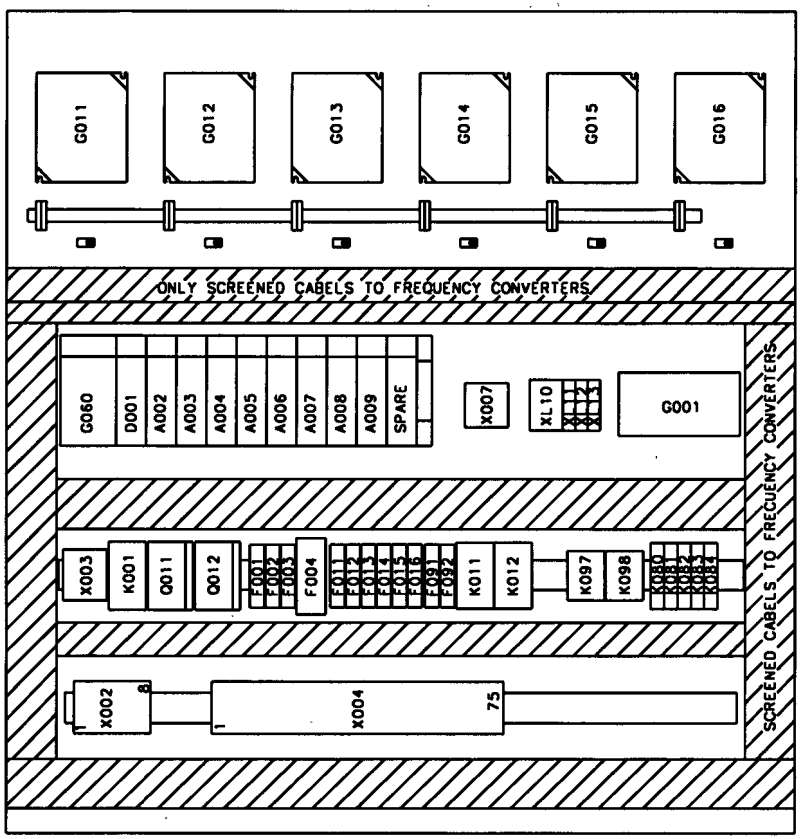

TETRA EASY RIDE

Note	AA					Tetra Pak	Designer PNO	Date 010101	Approved	Date	Doc. class –
ECN No.	85617						Machine SEE ABOVE	Denomination MOUNTING DRAWING		
Sign./Date	AMM/010101						Company Tetra Brik PS AB	Drawing No 53073-0007		Page –
Appr./Date						Drawing remarks				

This drawing must not without the consent of Tetra Pak:
be copied, transmitted or disclosed to any third party.

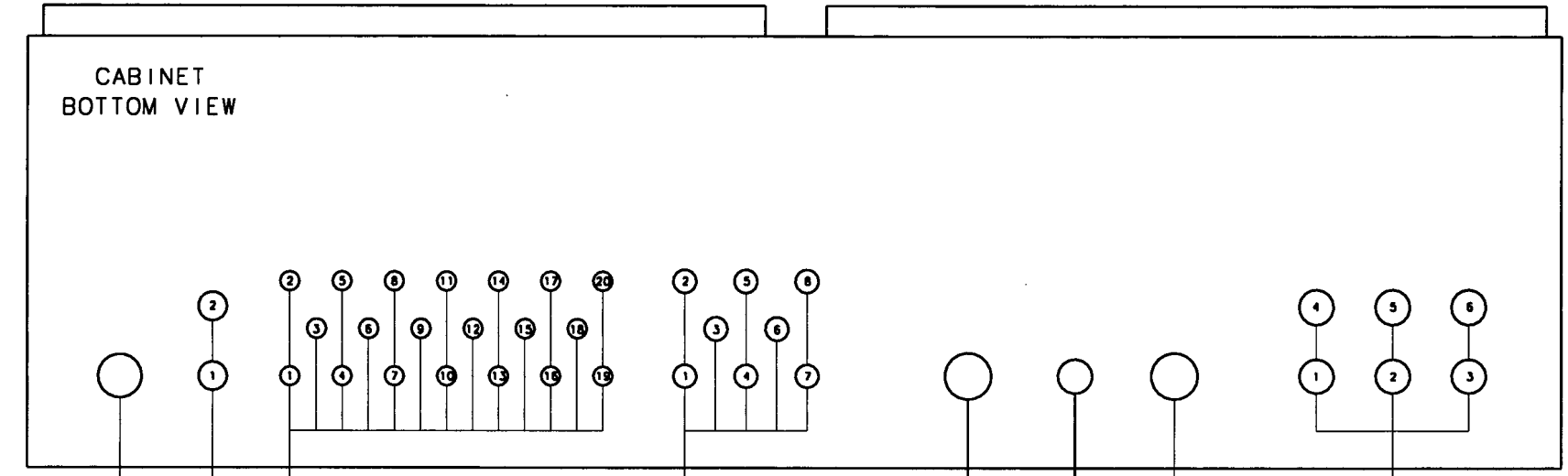

PR 28,3
MAIN POWER

PR 18,6(X2)
W 0111
W 0112

PR 12,5(X20)

1. W1011	11.W1021
2. W1012	12.W1022
3. W1013	13.W1023
4. W1014	14.W1024
5. W1015	15.W1025
6. W1016	16.W1026
7. W1017	17.W1027
8. W1018	18.W1028
9. W1019	19.W1029
10.W1020	20.W1030

PR 15,2(X8)
1. W1031
2. W1032
3. W1033
4. W1034
5. W1035
6. W1036
7. W1037
8. W1038

PR 28,3
W 1001

PR 22,5
W 1002

PR 28,3
SPARE

PR 22,5(X6)
1. W0101
2. W0102
3. W0103
4. W0104
5. W0105
6. W0106

Holes not used is to be plugged

TETRA EASY RIDE PLUS

Note	AA					Tetra Pak	Designer PNO	Date 010101	Approved	Date	Doc. class –
ECN No.	85617						Machine SEE ABOVE	Denomination MOUNTING DRAWING		
Sign./Date	AMM/010101									
Appr./Date					Drawing remarks	Company Tetra Brik PS AB		Drawing No 53073-0008		Page –

This drawing must not without the consent of Tetra Pak:
be copied, transmitted or disclosed to any third party.

M.X101

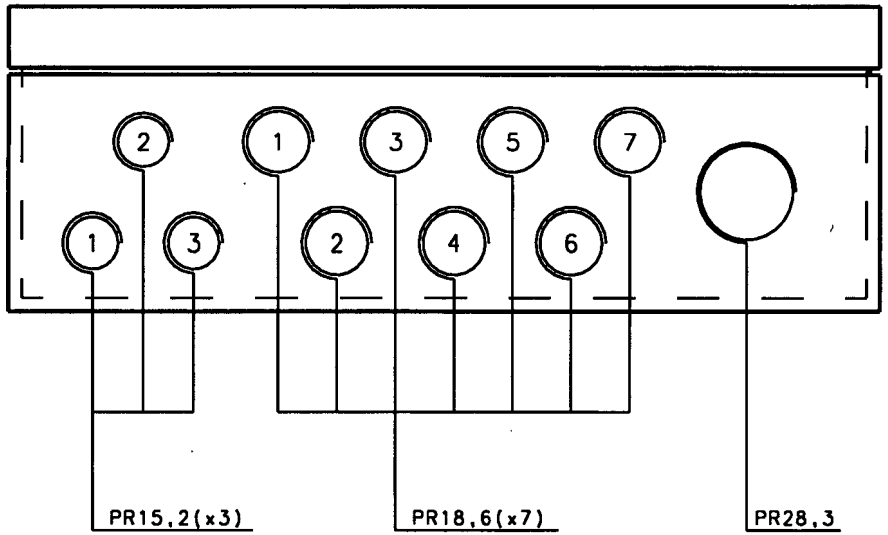

PR15,2(x3)
1. W1107
2. W1108
2. W1111

PR18,6(x7)
1. W1101
2. W1105
3. W1106
4. W1114
5. W1120
6. W1126
7. W1132

PR28,3
W1001

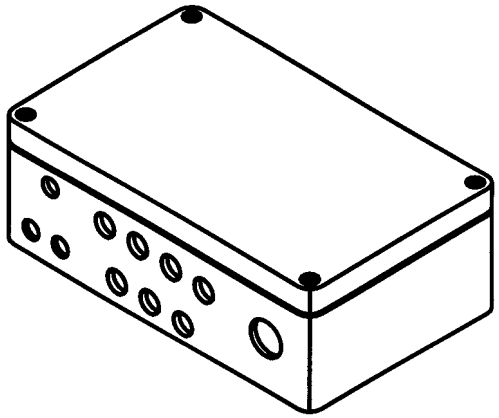

Holes not used is to be plugged

TETRA EASY RIDE PLUS

Note	AA					Tetra Pak	Designer PNO	Date 010101	Approved	Date	Doc. class –
ECN No.	85617						Machine SEE ABOVE	Denomination MOUNTING DRAWING			
Sign./Date	AMM/010101										
Appr./Date					Drawing remarks	Company Tetra Brik PS AB		Drawing No 53073-0010			Page –

This drawing must not without the consent of Tetra Pak:
be copied, transmitted or disclosed to any third party.

M.X102

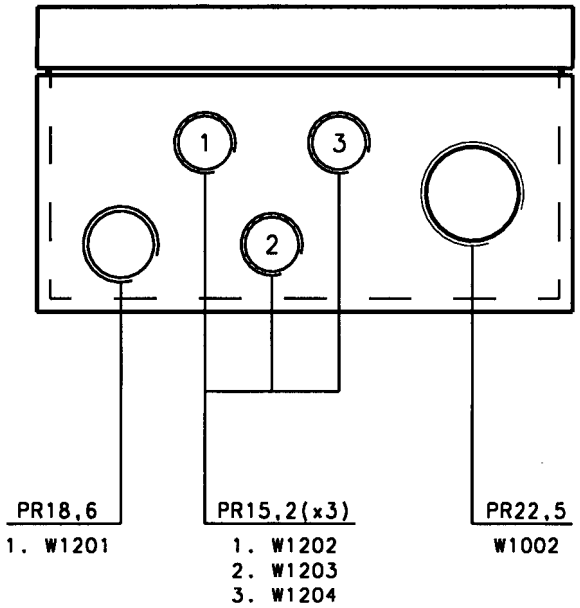

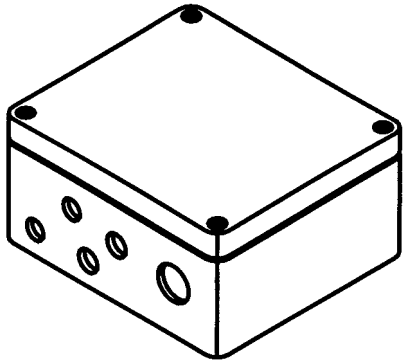

Holes not used is to be plugged

TETRA EASY RIDE PLUS

Note	AA					Tetra Pak	Designer PNO	Date 010101	Approved	Date	Doc. class –
ECN No.	85617						Machine SEE ABOVE	Denomination MOUNTING DRAWING			
Sign./Date	AMM/010101					Company Tetra Brik PS AB		Drawing No 53073-0011			Page –
Appr./Date					Drawing remarks						

This drawing must not without the consent of Tetra Pak:
be copied, transmitted or disclosed to any third party.

M.X111

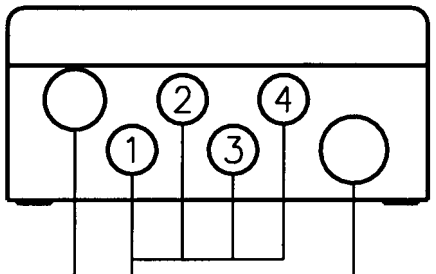

PR15,2
W1119

PR12,5(x4)
1. W1115
2. W1116
3. W1117
4. W1118

PR18,6
W1114

M.X151

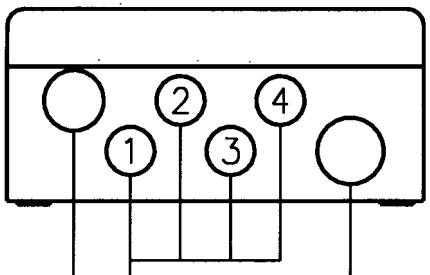

PR15,2
SPARE

PR12,5(x4)
1. W1102
2. W1103
3. W1104
4. SPARE

PR18,6
W1101

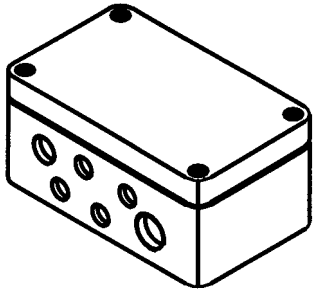

M.X131

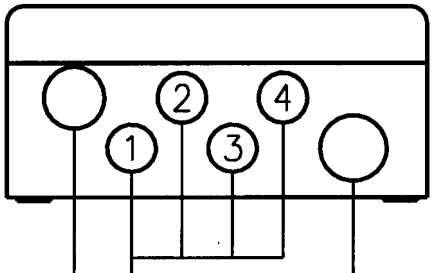

PR15,2
W1137

PR12,5(x4)
1. W1133
2. W1134
3. W1135
4. W1136

PR18,6
W1132

Holes not used is to be plugged

TETRA EASY RIDE PLUS

Note	AA					Tetra Pak	Designer PNO	Date 010101	Approved	Date	Doc. class –
ECN No.	85617						Machine SEE ABOVE	Denomination MOUNTING DRAWING			
Sign./Date	AMM/010101					Company Tetra Brik PS AB		Drawing No 53073-0012			Page –
Appr./Date					Drawing remarks						

This drawing must not without the consent of Tetra Pak:
be copied, transmitted or disclosed to any third party.

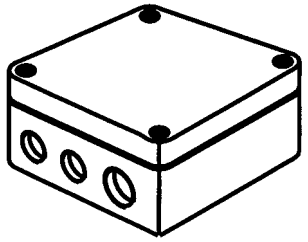

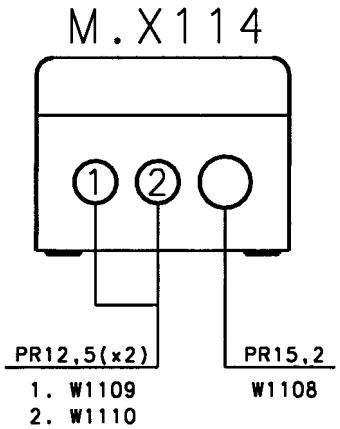

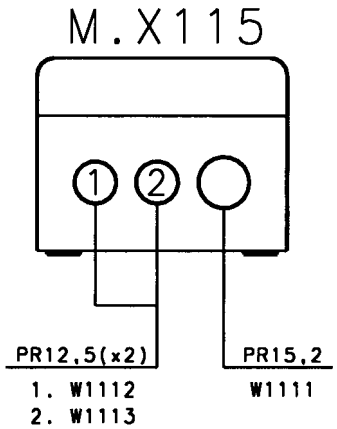

Holes not used is to be plugged

TETRA EASY RIDE PLUS

Note	AA					Tetra Pak	Designer PNO	Date 010101	Approved	Date	Doc. class –
ECN No.	85617						Machine SEE ABOVE	Denomination MOUNTING DRAWING		
Sign./Date	AMM/010101					Company Tetra Brik PS AB		Drawing No 53073-0013		Page –
Appr./Date					Drawing remarks					

This drawing must not without the consent of Tetra Pak:
be copied, transmitted or disclosed to any third party.

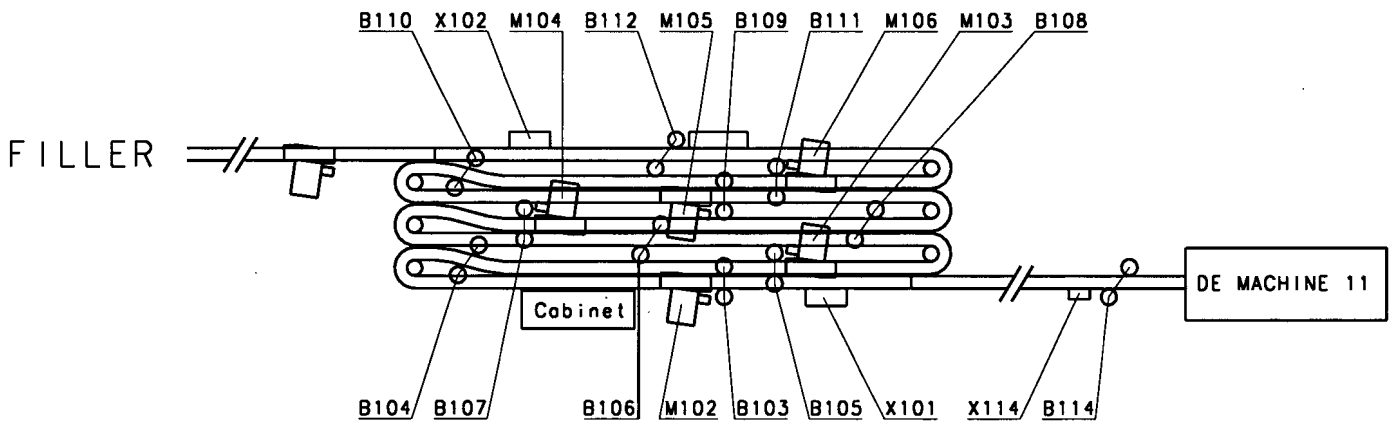

LAYOUT 1

TETRA EASY RIDE PLUS

Note	AA					Tetra Pak	Designer PNO	Date 010101	Approved	Date	Doc. class –
ECN No.	85617						Machine SEE ABOVE	Denomination MOUNTING DRAWING			
Sign./Date	AMM/010101					Company Tetra Brik PS AB		Drawing No 53073-0020			Page –
Appr./Date						Drawing remarks					

This drawing must not without the consent of Tetra Pak: be copied, transmitted or disclosed to any third party.

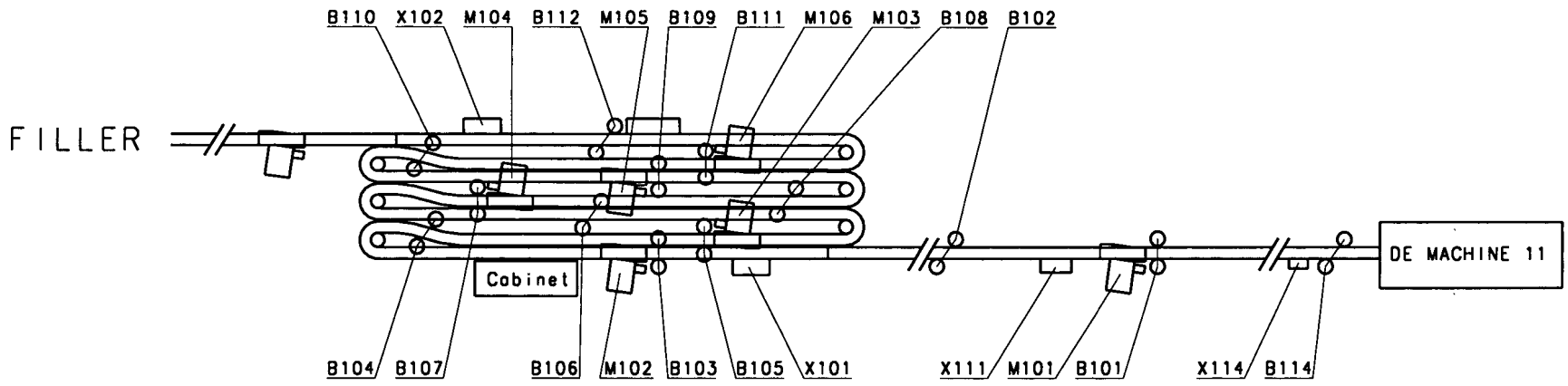

LAYOUT 2

TETRA EASY RIDE PLUS

Note	AA					Tetra Pak	Designer PNO	Date 010101	Approved	Date	Doc. class –
ECN No.	85617						Machine SEE ABOVE	Denomination MOUNTING DRAWING			
Sign./Date	AMM/010101					Company Tetra Brik PS AB		Drawing No 53073-0021			Page –
Appr./Date						Drawing remarks					

This drawing must not without the consent of Tetra Pak:
be copied, transmitted or disclosed to any third party.

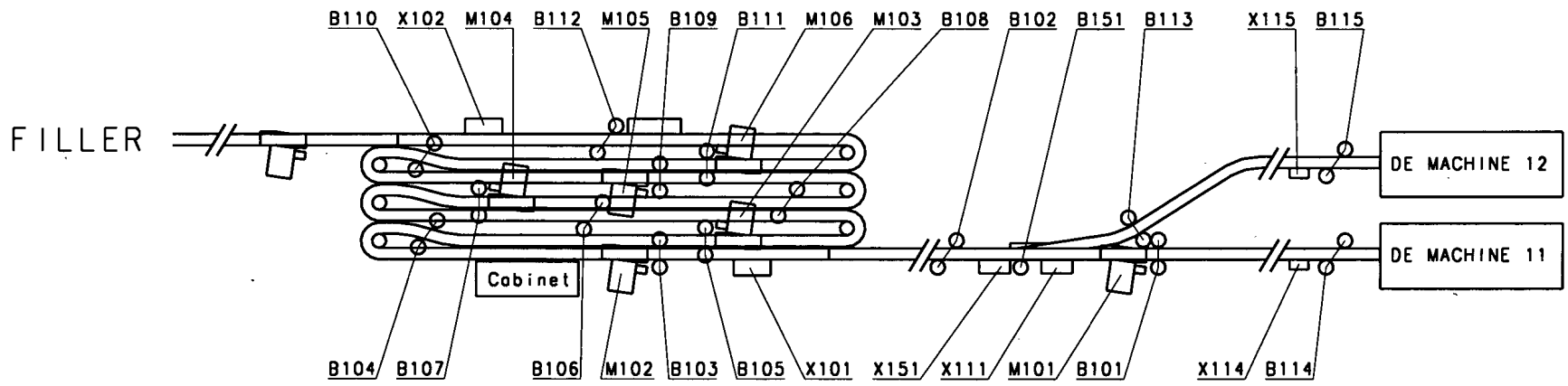

LAYOUT 3

TETRA EASY RIDE PLUS

Note	AA					Tetra Pak	Designer PNO	Date 010101	Approved	Date	Doc. class –
ECN No.	85617						Machine SEE ABOVE	Denomination MOUNTING DRAWING			
Sign./Date	AMM/010101					Company Tetra Brik PS AB		Drawing No 53073-0022			Page –
Appr./Date						Drawing remarks					

This drawing must not without the consent of Tetra Pak:
be copied, transmitted or disclosed to any third party.

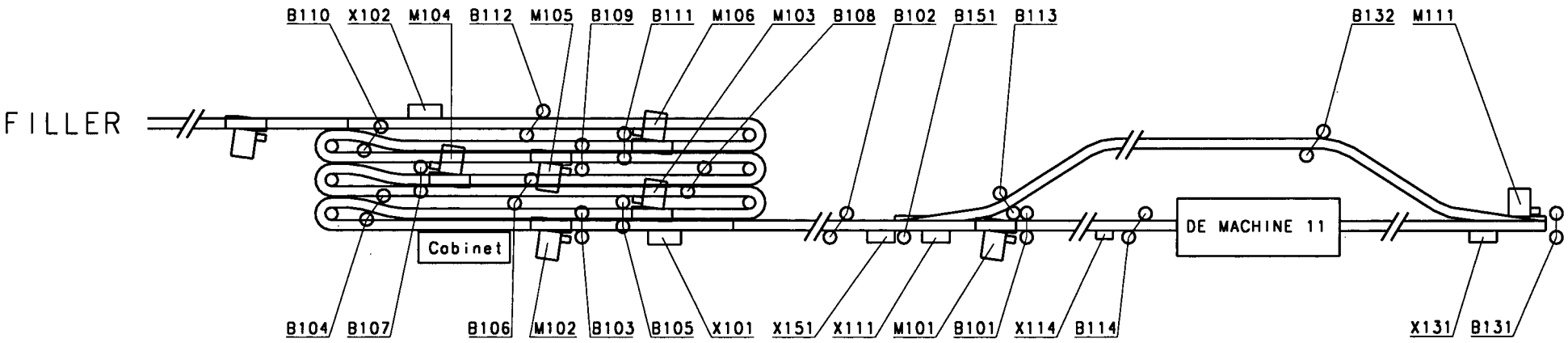

LAYOUT 4

TETRA EASY RIDE PLUS

Note	AA					Tetra Pak	Designer PNO	Date 010101	Approved	Date	Doc. class –
ECN No.	85617						Machine SEE ABOVE	Denomination MOUNTING DRAWING			
Sign./Date	AMM/010101					Company Tetra Brik PS AB		Drawing No 53073-0023			Page –
Appr./Date					Drawing remarks						

This drawing must not without the consent of Tetra Pak:
be copied, transmitted or disclosed to any third party.

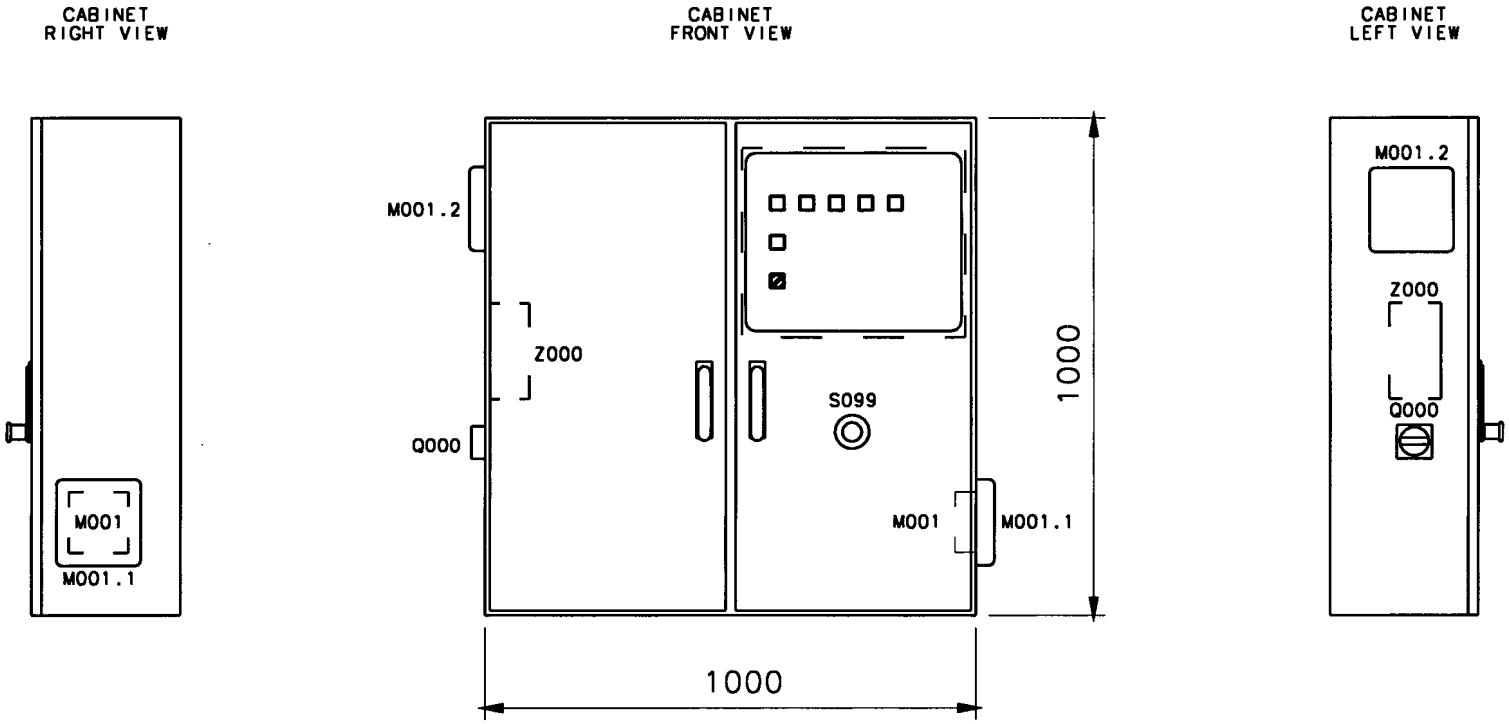

TETRA EASY RIDE PLUS

Mate	AA					Tetra Pak	Designer PNO	Date 010101	Approved	Date	Doc. class –
ECN No.	85617						Machine SEE ABOVE	Denomination MOUNTING DRAWING			
Sign./Date	AMM/010101					Company Tetra Brik PS AB		Drawing No 53213-0005			Page –
Appr./Date					Drawing remarks						

This drawing must not without the consent of Tetra Pak: be copied, transmitted or disclosed to any third party.

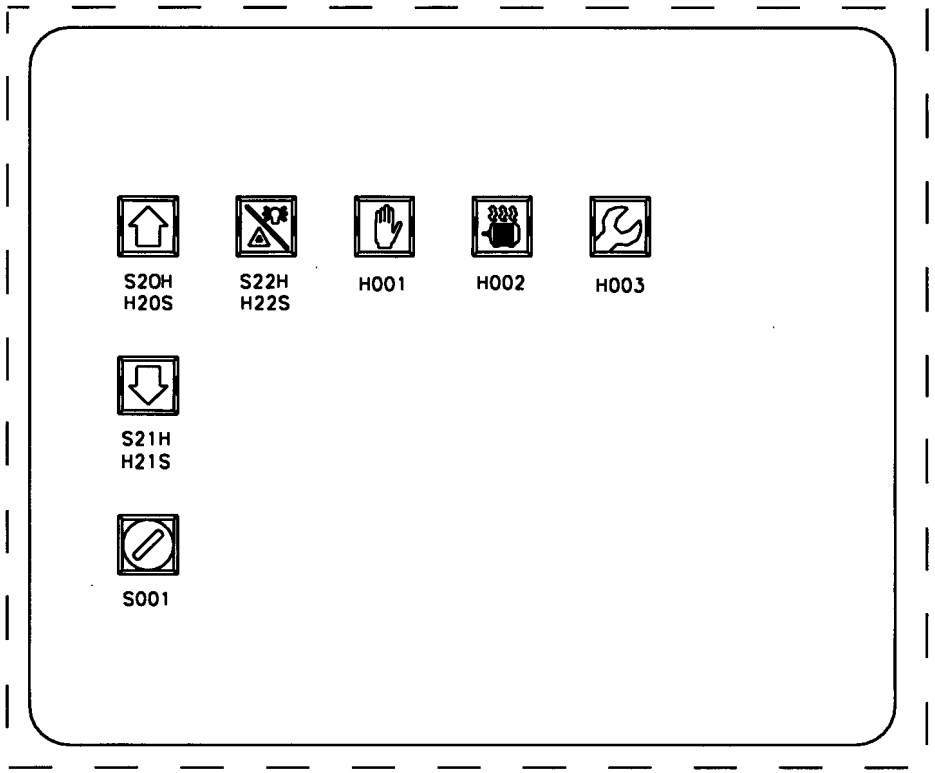

S20H=STEP UP
S21H=STEP DOWN
S22H=RESET ALRM/LAMP TEST
H001=ALARM EMERGENCY STOP
H002=ALARM MOTOR OVERLOAD
H003=ALARM CONVEYOR SWITCH
S001=AUTO/MAN RUN PACKAGE CONVEYOR

TETRA EASY RIDE PLUS

Note	AA					Tetra Pak	Designer PNO	Date 010101	Approved	Date	Doc. class –
ECN No.	85617						Machine SEE ABOVE	Denomination MOUNTING DRAWING		
Sign./Date	AMM/010101									
Appr./Date					Drawing remarks	Company Tetra Brik PS AB		Drawing No 53213-0006		Page –

This drawing must not without the consent of Tetra Pak: be copied, transmitted or disclosed to any third party.

CABINET
INSIDE VIEW

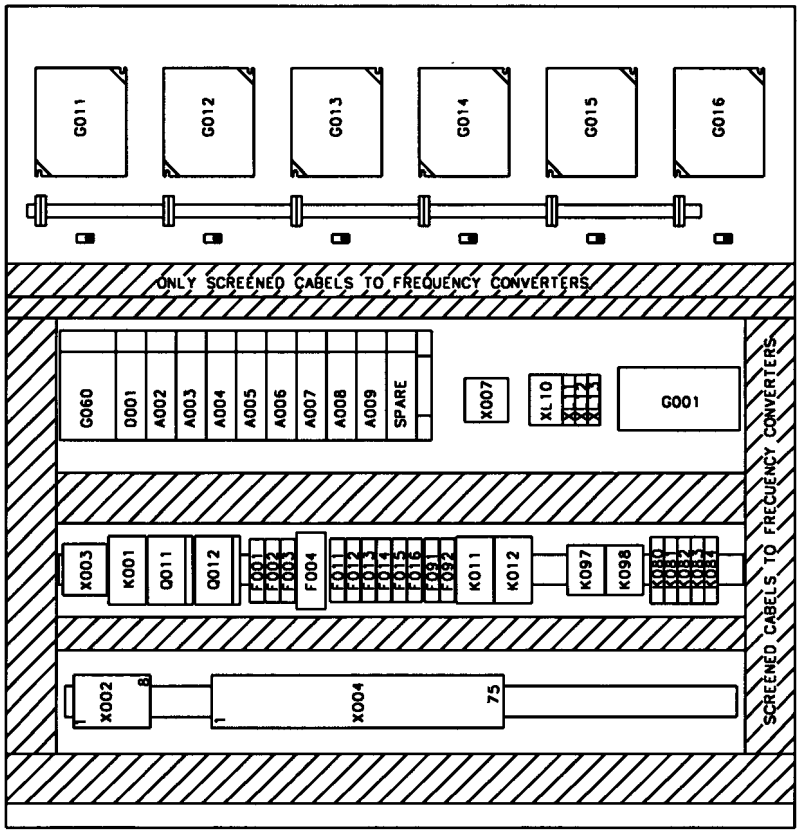

TETRA EASY RIDE

Note	AA					Tetra Pak	Designer PNO	Date 010101	Approved	Date	Doc. class –
ECN No.	85617						Machine SEE ABOVE	Denomination MOUNTING DRAWING		
Sign./Date	AMM/010101									
Appr./Date					Drawing remarks		Company Tetra Brik PS AB	Drawing No 53213-0007		Page –

This drawing must not without the consent of Tetra Pak:
be copied, transmitted or disclosed to any third party.

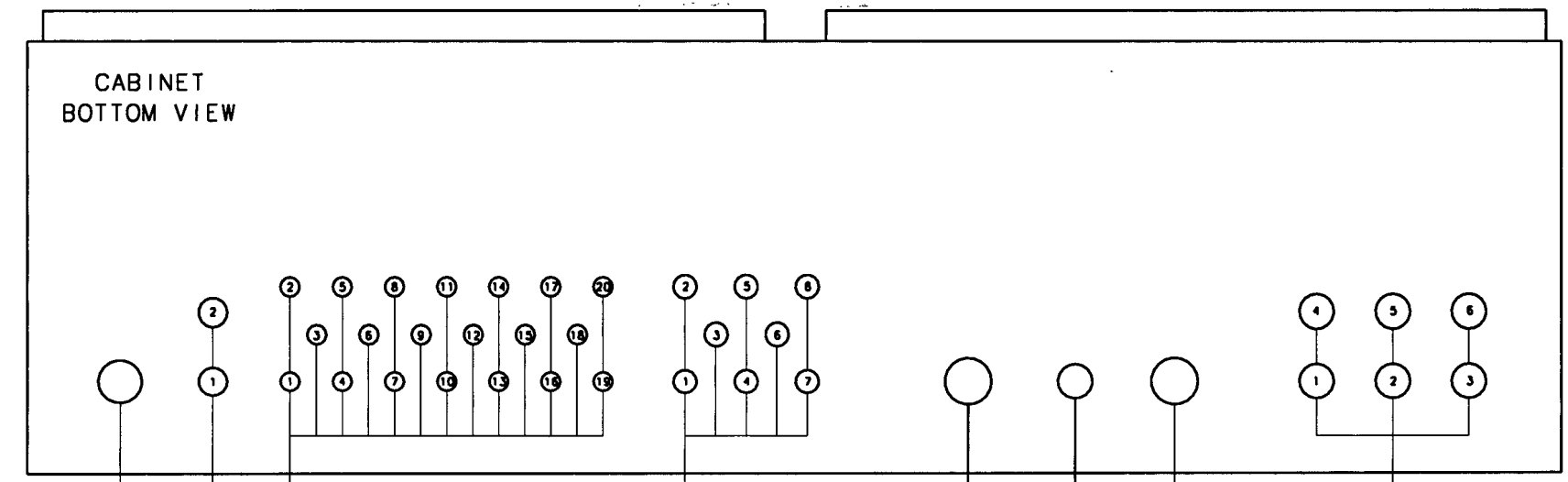

PR 28,3
MAIN POWER

PR 18,6(X2)
W 0111
W 0112

PR 12,5(x20)

1. SPARE	11. SPARE
2. SPARE	12. SPARE
3. SPARE	13. SPARE
4. SPARE	14. SPARE
5. SPARE	15. SPARE
6. SPARE	16. SPARE
7. SPARE	17. SPARE
8. SPARE	18. SPARE
9. SPARE	19. SPARE
10.SPARE	20. SPARE

PR 15,2(x8)
1. SPARE
2. SPARE
3. SPARE
4. SPARE
5. SPARE
6. SPARE
7. SPARE
8. SPARE

PR 28,3
W 1001

PR 22,5
W 1002

PR 28,3
W 1003

PR 22,5(X6)
1. W0101
2. W0102
3. W0103
4. W0104
5. W0105
6. W0106

Holes not used is to be plugged

TETRA EASY RIDE PLUS

Note	AA					Tetra Pak	Designer PNO	Date 010101	Approved	Date	Doc. class –
ECN No.	85617						Machine SEE ABOVE	Denomination MOUNTING DRAWING			
Sign./Date	AMM/010101						Company Tetra Brik PS AB	Drawing No 53213-0008			Page –
Appr./Date						Drawing remarks					

This drawing must not without the consent of Tetra Pak:
be copied, transmitted or disclosed to any third party.

M.X101

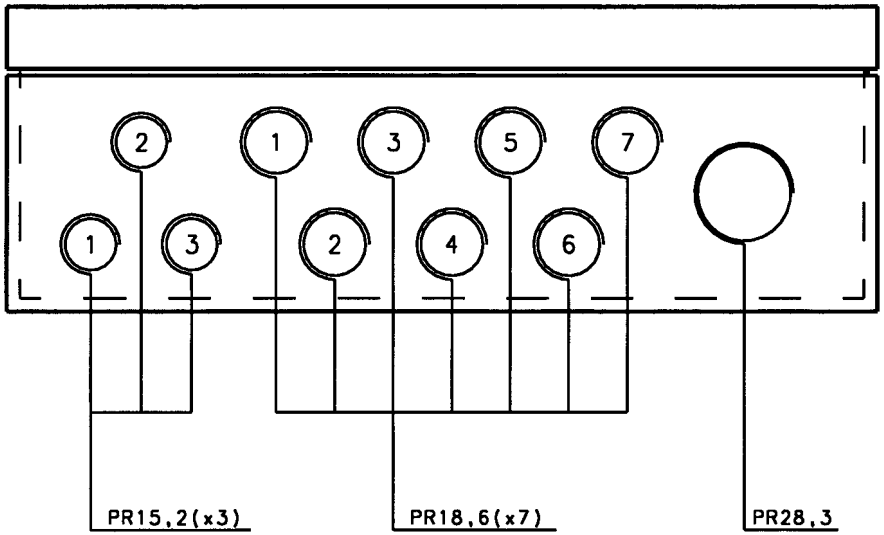

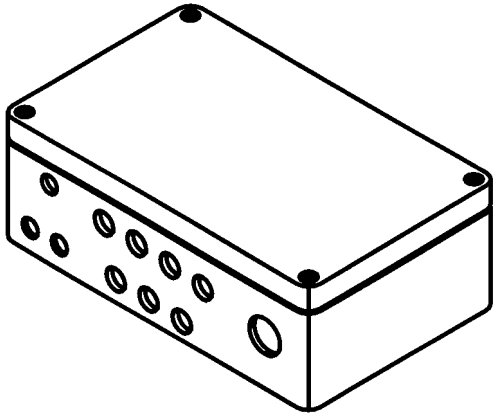

Holes not used is to be plugged

TETRA EASY RIDE PLUS

Note	AA					Tetra Pak	Designer PNO	Date 010101	Approved	Date	Doc. class -
ECN No.	85617						Machine SEE ABOVE	Denomination MOUNTING DRAWING			
Sign./Date	AMM/010101					Company Tetra brik PS AB		Drawing No 53213-0010			Page -
Appr./Date						Drawing remarks					

This drawing must not without the consent of Tetra Pak:
be copied, transmitted or disclosed to any third party.

M.X102

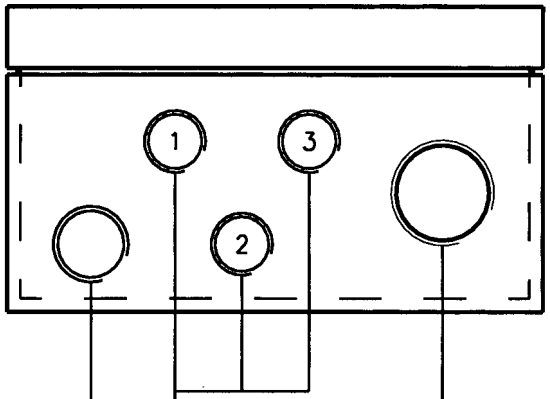

PR18,6
1. W1201

PR15,2(x3)
1. W1202
2. W1203
3. W1204

PR22,5
W1002

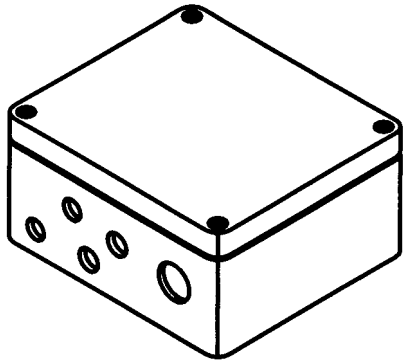

Holes not used is to be plugged

TETRA EASY RIDE PLUS

Note	AA					Tetra Pak	Designer PNO	Date 010101	Approved	Date	Doc. class –
ECN No.	85617						Machine SEE ABOVE	Denomination MOUNTING DRAWING			
Sign./Date	AMM/010101						Company Tetra Brik PS AB	Drawing No 53213-0011			Page –
Appr./Date						Drawing remarks					

This drawing must not without the consent of Tetra Pak:
be copied, transmitted or disclosed to any third party.

M.X103

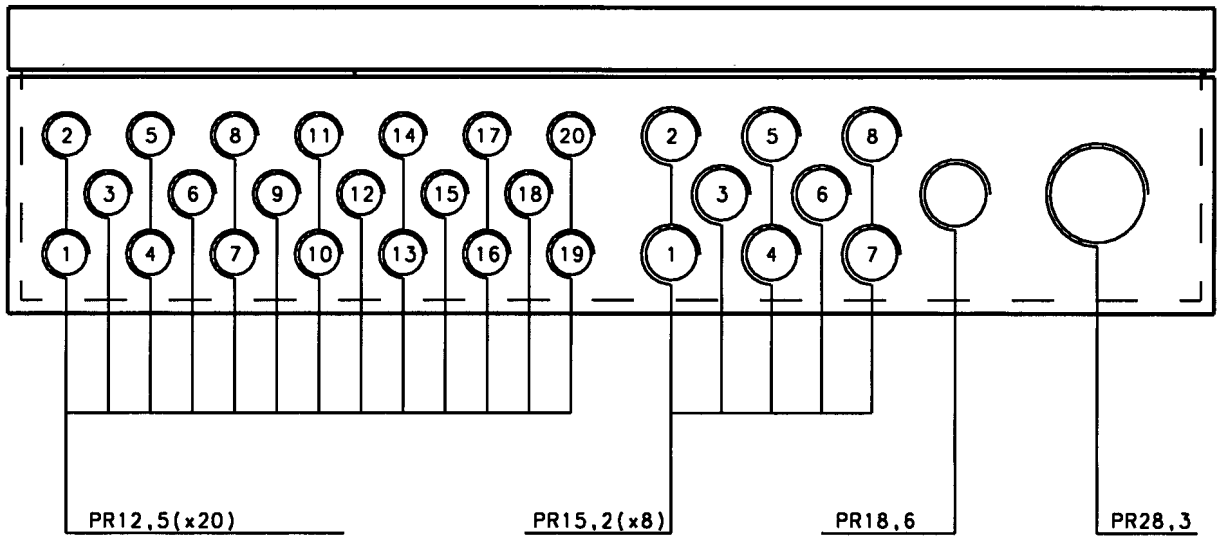

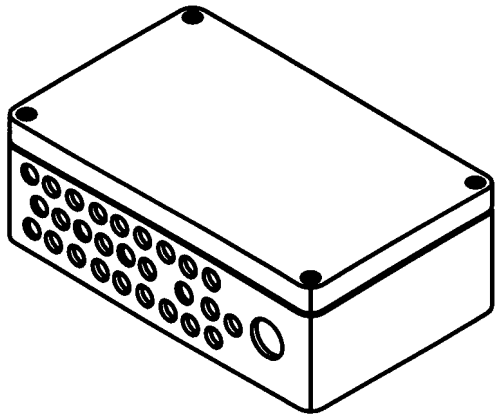

PR12,5(x20)

1. W1301
2. W1302
3. W1303
4. W1304
5. W1305
6. W1306
7. W1307
8. W1308
9. W1309
10. W1310
11. W1311
12. W1312
13. W1313
14. W1314
15. W1315
16. W1316
17. W1317
18. W1318
19. W1319
20. W1320

PR15,2(x8)

1. W1321
2. W1322
3. W1323
4. W1324
5. W1325
6. W1326
7. W1327
8. W1328

PR18,6

W 1329

PR28,3

W1003

Holes not used is to be plugged

TETRA EASY RIDE PLUS

Note	AA					Tetra Pak	Designer PNO	Date 010101	Approved	Date	Doc. class –
ECN No.	85617						Machine SEE ABOVE	Denomination MOUNTING DRAWING			
Sign./Date	AMM/010101						Company Tetra Brik PS AB	Drawing No 53213-0012			Page –
Appr./Date					Drawing remarks						

This drawing must not without the consent of Tetra Pak:
be copied, transmitted or disclosed to any third party.

M.X111

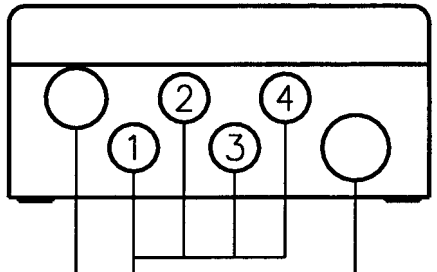

PR15,2
W1119

PR12,5(x4)
1. W1115
2. W1116
3. W1117
4. W1118

PR18,6
W1114

M.X151

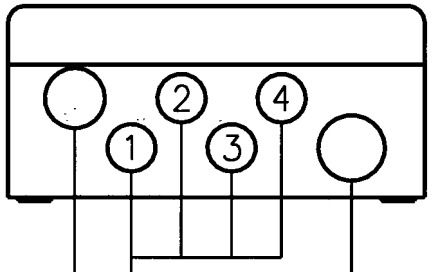

PR15,2
SPARE

PR12,5(x4)
1. W1102
2. W1103
3. W1104
4. SPARE

PR18,6
W1101

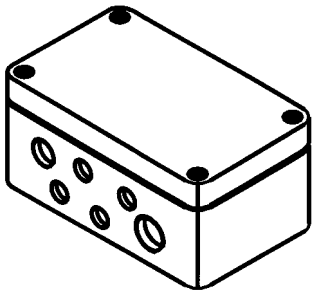

M.X131

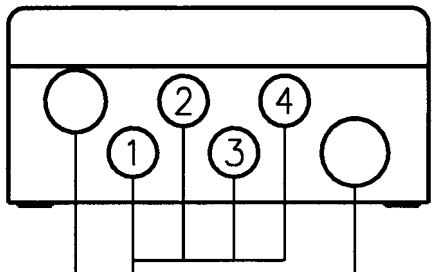

PR15,2
W1137

PR12,5(x4)
1. W1133
2. W1134
3. W1135
4. W1136

PR18,6
W1132

Holes not used is to be plugged

TETRA EASY RIDE PLUS

Mole	AA					Tetra Pak	Designer PNO	Date 010101	Approved	Date	Doc. class –
ECN No.	85617						Machine SEE ABOVE	Denomination MOUNTING DRAWING		
Sign./Date	AMM/010101									
Appr./Date					Drawing remarks		Company Tetra Brik PS AB	Drawing No 53213-0013		Page –

This drawing must not without the consent of Tetra Pak:
be copied, transmitted or disclosed to any third party.

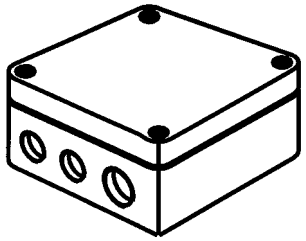

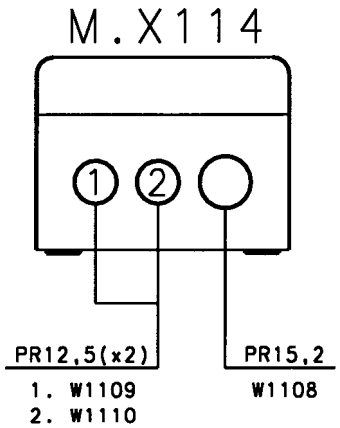

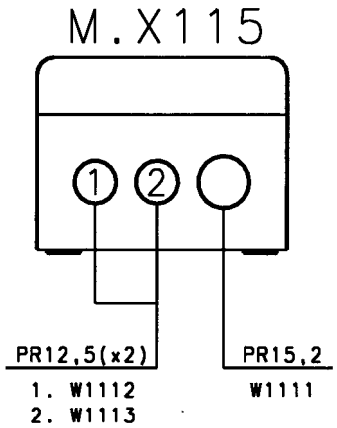

Holes not used is to be plugged

TETRA EASY RIDE PLUS

Rev.	AA					Tetra Pak	Designer PNO	Date 010101	Approved	Date	Doc. class –
ECN No.	85617						Machine SEE ABOVE	Denomination MOUNTING DRAWING			
Sign./Date	AMM/010101					Company Tetra Brik PS AB		Drawing No 53213-0014			Page –
Appr./Date						Drawing remarks					

This drawing must not without the consent of Tetra Pak:
be copied, transmitted or disclosed to any third party.

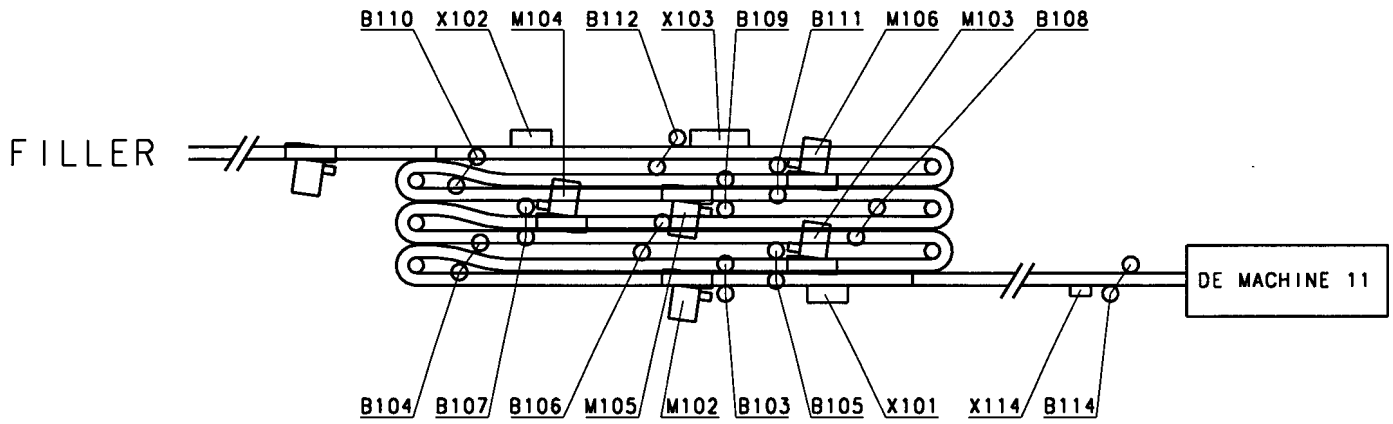

LAYOUT 1

TETRA EASY RIDE PLUS

Note	AA					Tetra Pak	Designer PNO	Date 010101	Approved	Date	Doc. class -
ECN No.	85617						Machine SEE ABOVE	Denomination MOUNTING DRAWING			
Sign./Date	AMM/010101										
Appr./Date					Drawing remarks	Company Tetra Brik PS AB		Drawing No 53213-0020			Page -

This drawing must not without the consent of Tetra Pak: be copied, transmitted or disclosed to any third party.

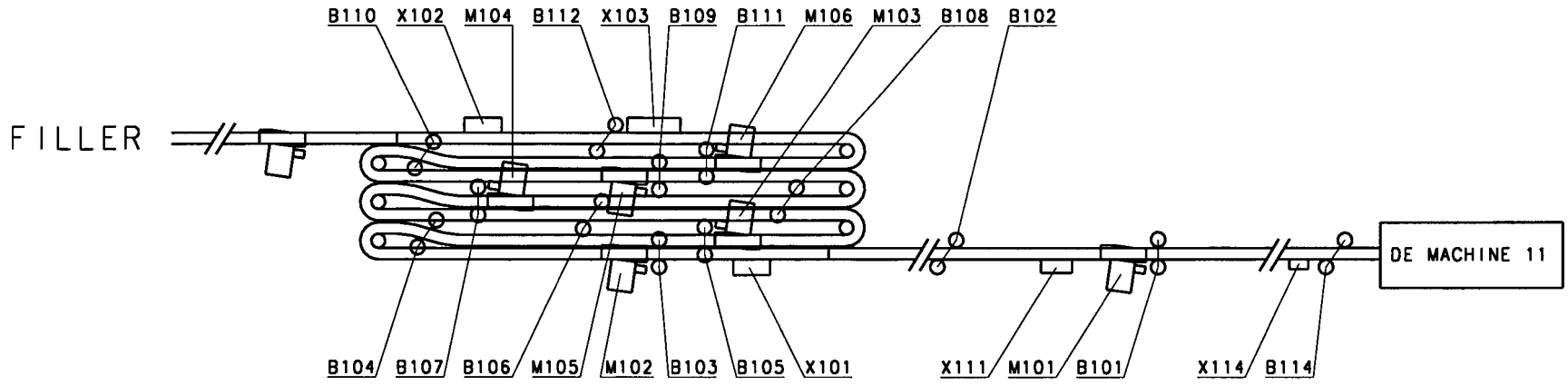

LAYOUT 2

TETRA EASY RIDE PLUS

Note	AA					Tetra Pak	Designer PNO	Date 010101	Approved	Date	Doc. class –
ECN No.	85617						Machine SEE ABOVE	Denomination MOUNTING DRAWING			
Sign./Date	AMM/010101					Company Tetra Brik PS AB		Drawing No 53213-0021			Page –
Appr./Date						Drawing remarks					

This drawing must not without the consent of Tetra Pak:
be copied, transmitted or disclosed to any third party.

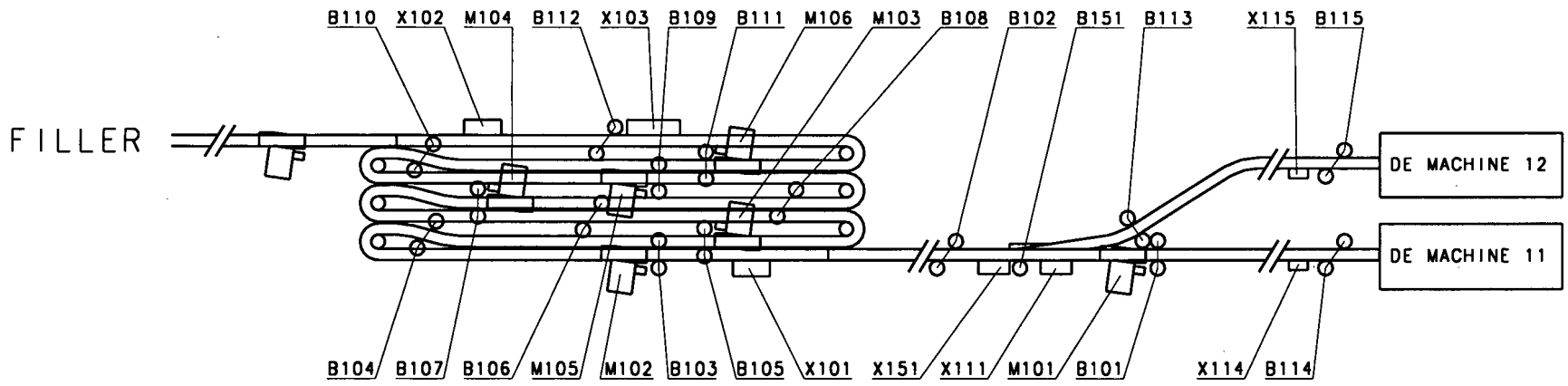

LAYOUT 3

TETRA EASY RIDE PLUS

Note	AA					Tetra Pak	Designer PNO	Date 010101	Approved	Date	Doc. class –
ECN No.	85617						Machine SEE ABOVE	Denomination MOUNTING DRAWING			
Sign./Date	AMM/010101					Company Tetra Brik PS AB		Drawing No 53213-0022			Page –
Appr./Date					Drawing remarks						

This drawing must not without the consent of Tetra Pak:
be copied, transmitted or disclosed to any third party.

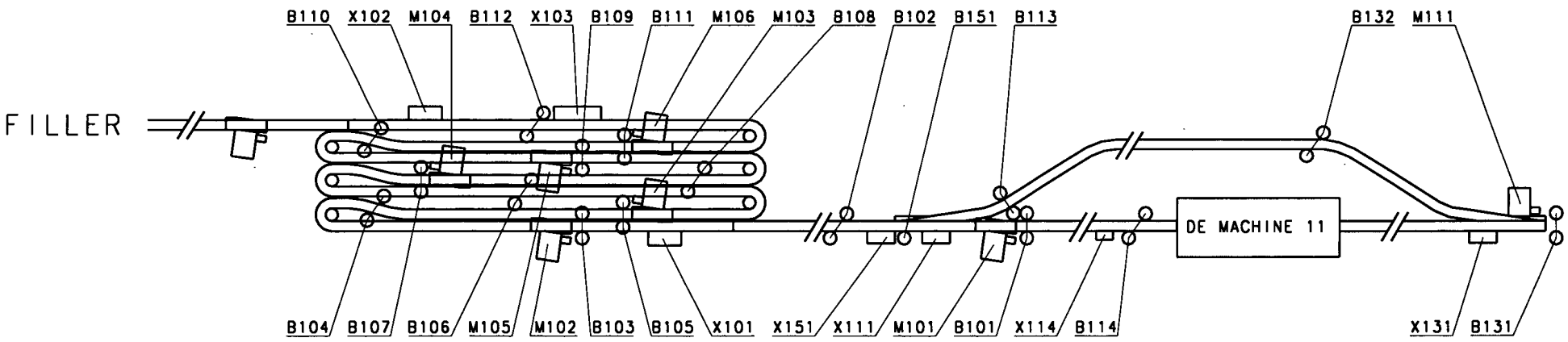

LAYOUT 4

TETRA EASY RIDE PLUS

Note	AA					Tetra Pak	Designer PNO	Date 010101	Approved	Date	Doc. class –
ECN No.	85617						Machine SEE ABOVE	Denomination MOUNTING DRAWING			
Sign./Date	AMM/010101					Company Tetra Brik PS AB		Drawing No 53213-0023			Page –
Appr./Date					Drawing remarks						

This drawing must not without the consent of Tetra Pak: be copied, transmitted or disclosed to any third party.

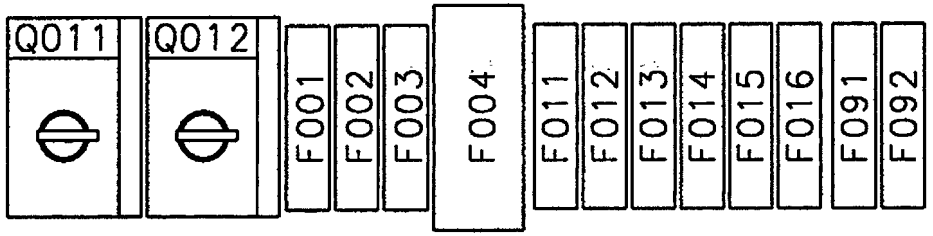

POS	FUNCTION	SETTINGS/RATINGS 400V OR MATCH.TRANSF.
Q011	M111 CONVEYOR MOTOR	1.2 A
Q012	M112 CONVEYOR MOTOR	1.2 A
F001	POWER DC	6 A
F002	POWER FAN + WALL SOCKET	6 A
F003	POWER PLC	6 A
F004	EARTH FAULT BREAKER	30 mA
F011	M.M101 CONVEYOR MOTOR	10 A
F012	M.M102 CONVEYOR MOTOR	10 A
F013	M.M103 CONVEYOR MOTOR	10 A
F014	M.M104 CONVEYOR MOTOR	10 A
F015	M.M105 CONVEYOR MOTOR	10 A
F016	M.M106 CONVEYOR MOTOR	10 A
F091	POWER DC, L11	6 A
F092	POWER DC, L12 & L13	6 A

TETRA EASY RIDE 1366850

TETRA EASY RIDE PLUS

Note	AA				BLACK LETTERS ON WHITE 100 G PAPER	Tetra Pak	Designer PNO	Date 010101	Approved Date	Doc. class -
ECN No.	85617				PLASTIC EMBEDDED, SHINY SURFACE		Machine SEE ABOVE	Designation FUSE PANEL LABEL		
Sign./Date	AMM/010101				SCALE 1:1 (A4 DRAWNING SIZE)	Company Tetra Brik PS AB		Drawing No 1366850		Page -
Appr./Date					Drawing remarks					

10 Circuit diagrams

2.2TH601381en.fm

Note! For table of contents, see chapter 7 (Table of contents for electrical documents).

2.2TH601381en.fm

POSITION SUMMARY "O" Date: 1-10-31

ECN 27947 'W'

Position	Sheet	Position	Sheet	Position	Sheet	Position	Sheet	Position	Sheet
A002	24:01	M.B108.1	28:01	F001	20:01	K080	38:01	M.Q105	25:01
A002	25:01	M.B108.2	28:01	F002	21:01	K081	38:01	M.Q106	08:01
A003	26:01	M.B109.1	29:01	F003	21:01	K082	38:01	M.Q106	25:01
A003	27:01	M.B109.2	29:01	F004	21:01	K083	38:01	M.Q111	09:01
A004	28:01	M.B110.1	29:01	F011	06:01	K084	38:01	M.Q111	25:01
A004	29:01	M.B110.2	29:01	F012	06:01	K097	23:01	M.Q112	09:01
A005	30:01	M.B111.1	29:01	F013	07:01	K098	23:01	M.Q112	25:01
A005	31:01	M.B111.2	29:01	F014	07:01				
A006	32:01	M.B112.1	29:01	F015	08:01	M001	21:01	S001	24:01
A006	33:01	M.B112.2	29:01	F016	08:01	M.M101	06:01	S099	23:01
A007	34:01	M.B113.1	29:01	F091	20:01	M.M102	06:01	M.S101	23:01
A007	35:01	M.B113.2	29:01	F092	20:01	M.M103	07:01	M.S102	23:01
A008	36:01	M.B114.1	29:01			M.M104	07:01	S20H	24:01
A008	37:01	M.B114.2	29:01	G001	20:01	M.M105	08:01	S21H	24:01
A009	38:01	M.B115.1	29:01	G011	06:01	M.M106	08:01	S22H	24:01
A009	39:01	M.B115.2	29:01	G012	06:01	M.M111	09:01		
A060	21:01	M.B121.1	30:01	G013	07:01	M.M112	09:01	X007	21:01
		M.B121.2	30:01	G014	07:01				
M.B101.1	28:01	M.B122.1	30:01	G015	08:01	Q000	05:01	M.Y101	37:01
M.B101.2	28:01	M.B122.2	30:01	G016	08:01	Q011	09:01	M.Y102	37:01
M.B102.1	28:01	M.B123.1	30:01	G060	21:01	Q011	26:01	M.Y951	39:01
M.B102.2	28:01	M.B123.2	30:01			Q012	09:01	M.Y952	39:01
M.B103.1	28:01	M.B124.1	30:01	H001	32:01	Q012	26:01		
M.B103.2	28:01	M.B124.2	30:01	H002	32:01	M.Q101	06:01	Z000	05:01
M.B104.1	28:01	M.B131.1	30:01	H003	32:01	M.Q101	25:01	Z011	06:01
M.B104.2	28:01	M.B131.2	30:01	H20S	32:01	M.Q102	06:01	Z012	06:01
M.B105.1	28:01	M.B132.1	30:01	H21S	32:01	M.Q102	25:01	Z013	07:01
M.B105.2	28:01	M.B132.2	30:01	H22S	32:01	M.Q103	07:01	Z014	07:01
M.B106.1	28:01	M.B151	31:01			M.Q103	25:01	Z015	08:01
M.B106.2	28:01			K001	37:01	M.Q104	07:01	Z016	08:01
M.B107.1	28:01	D001	21:01	K011	37:01	M.Q104	25:01	Z031	06:01
M.B107.2	28:01			K012	37:01	M.Q105	08:01	Z032	06:01

ECN 27947 'W'

Position	Sheet	Position	Sheet	Position	Sheet	Position	Sheet	Position	Sheet
Z033	06:01								
Z034	06:01								
Z035	07:01								
Z036	07:01								
Z037	07:01								
Z038	07:01								
Z039	08:01								
Z040	08:01								
Z041	08:01								
Z042	08:01								

This drawing must not without the consent of Tetra Pak:
be copied, transmitted or disclosed to any third party.

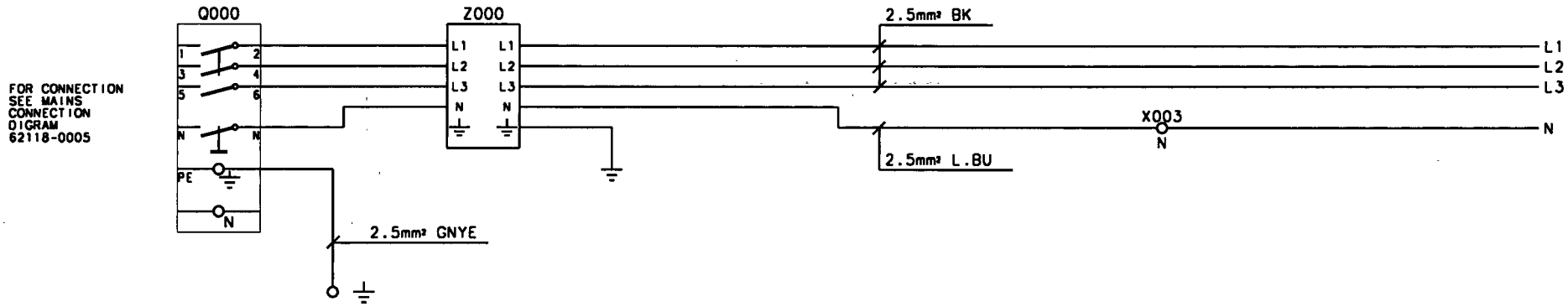

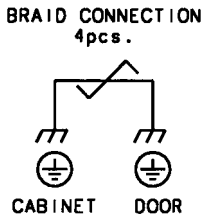

SYSTEM VOLTAGE	RECOMMENDED MAIN FUSE
3N ~ 50HZ 400/230V	10A

FOR TYPE OF WIRE, WIRING INSTRUCTIONS ETC.
SEE SPECIFIKATION FOR SUBSUPPLIERS TPUS 3502.22

WHERE NOTHING ELSE IS SAID
OR LINE SUMMARY IS VALID: 0.75mm2 BU
STAR OR BLUE MARKING IS USED
FOR SHOWING CONTINUOUS WIRE

TETRA EASY RIDE PLUS

Note	AA					Tetra Pak	Designer PNO	Date 010101	Approved	Date	Doc. class –
ECN No.	85617						Machine SEE ABOVE	Denomination CIRCUIT DIAGRAM			
Sign./Date	AMM/010101					Company Tetra Brik PS AB		Drawing No 45068-0005			Page –
Appr./Date					Drawing remarks						

This drawing must not without the consent of Tetra Pak:
be copied, transmitted or disclosed to any third party.

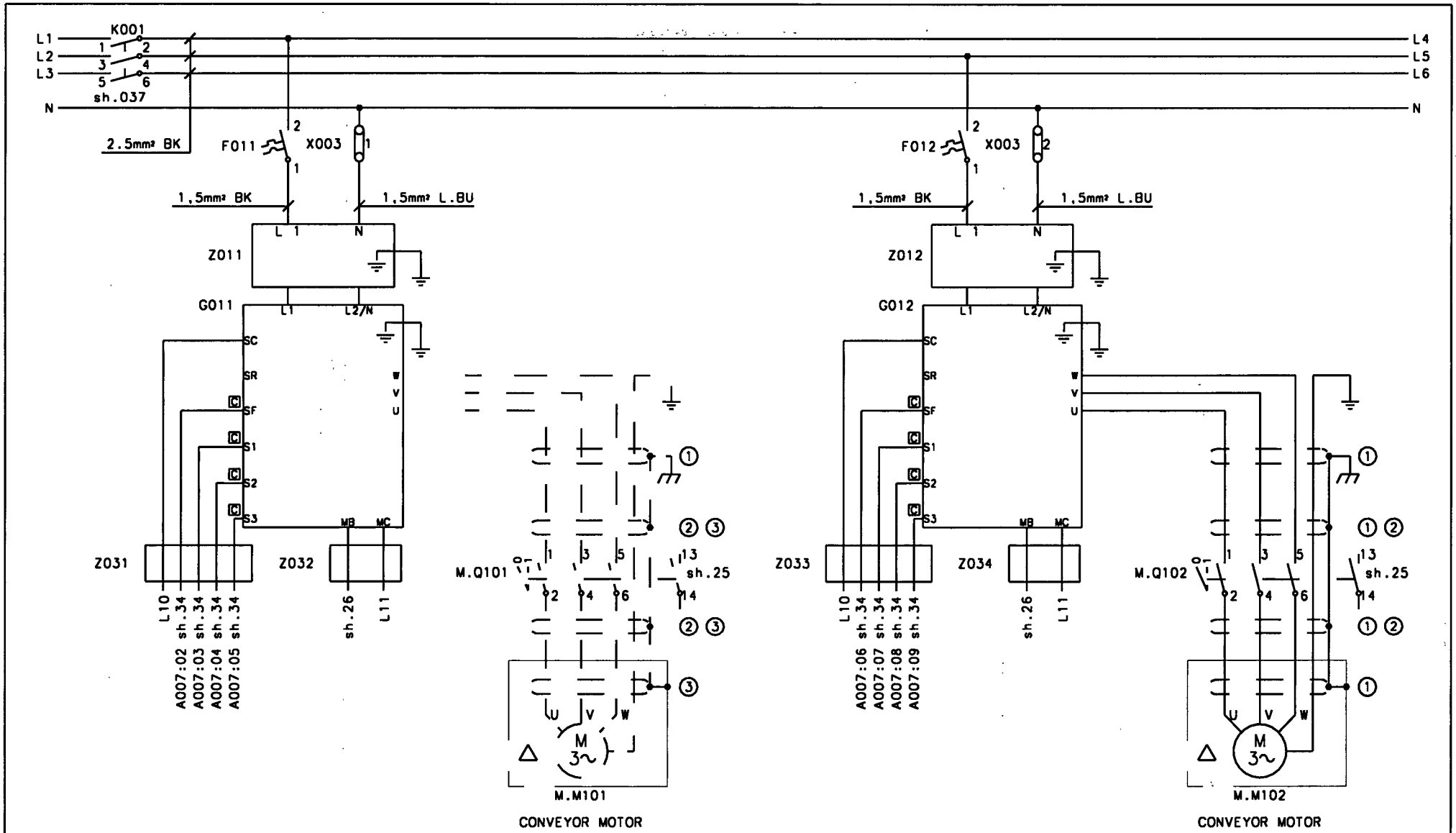

TETRA EASY RIDE PLUS

Note	AA				① SCREEN CONNECTED TO EMC-CLAMP	Tetra Pak	Designer PNO	Date 010101	Approved	Date	Doc. class -
ECN No.	85617				② CABELGLAND CONNECTED TO EMC-PLATE		Machine SEE ABOVE	Denomination CIRCUIT DIAGRAM		
Sign./Date	AMM/010101				③ SCREEN CONNECTED TO EMC-CABLEGLAND	Company Tetra Brik PS AB		Drawing No 45068-0006		Page -
Appr./Date					Drawing remarks					

This drawing must not without the consent of Tetra Pak:
be copied, transmitted or disclosed to any third party.

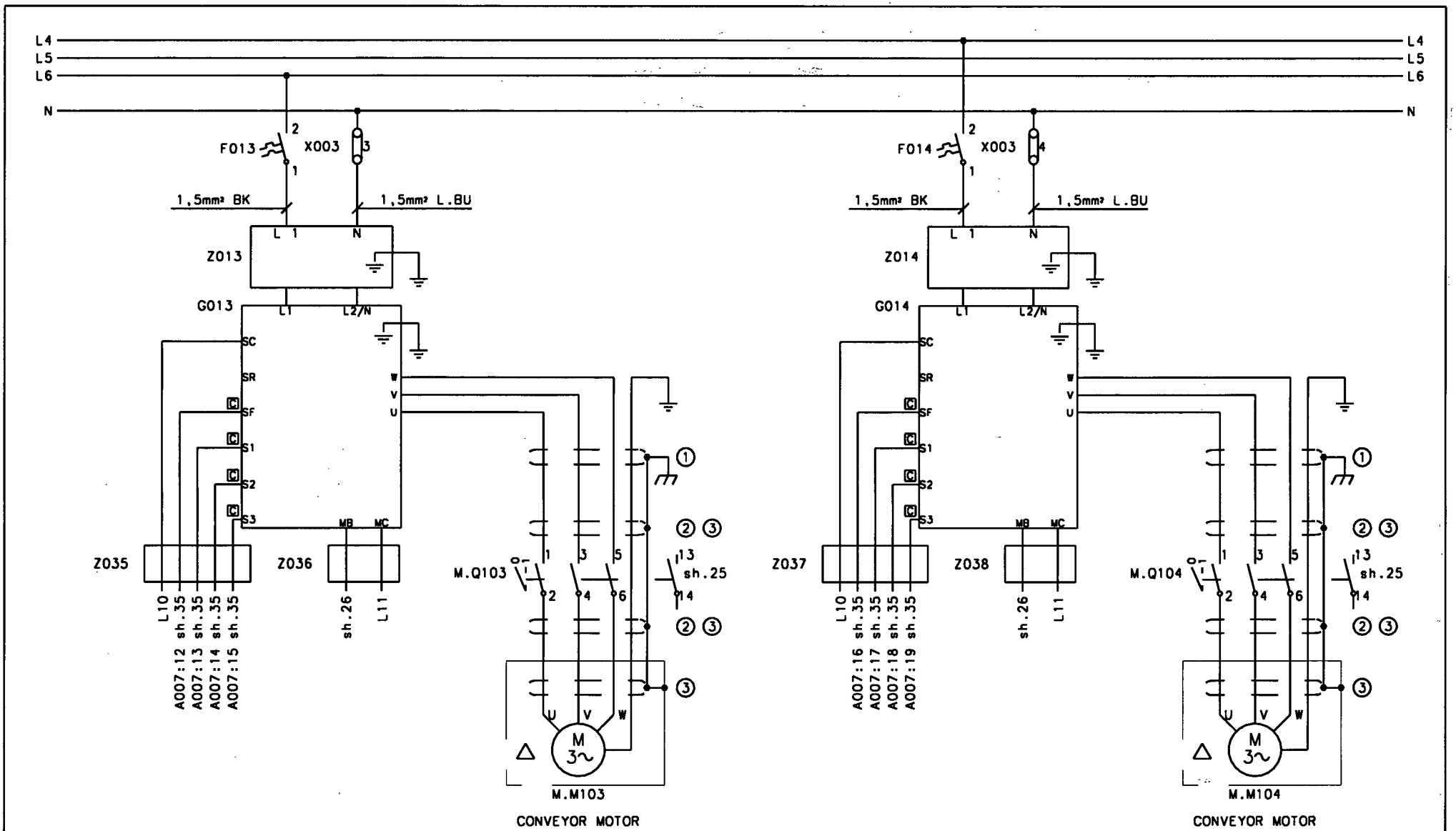

TETRA EASY RIDE PLUS

Note	AA				① SCREEN CONNECTED TO EMC-CLAMP	Tetra Pak	Designer PNO	Date 010101	Approved	Date	Doc. class -
ECN No.	85617				② CABELGLAND CONNECTED TO EMC-PLATE		Machine SEE ABOVE	Denomination CIRCUIT DIAGRAM		
Sign./Date	AMM/010101				③ SCREEN CONNECTED TO EMC-CABLEGLAND	Company Tetra Brik PS AB		Drawing No 45068-0007		Page -
Appr./Date					Drawing remarks					

This drawing must not without the consent of Tetra Pak:
be copied, transmitted or disclosed to any third party.

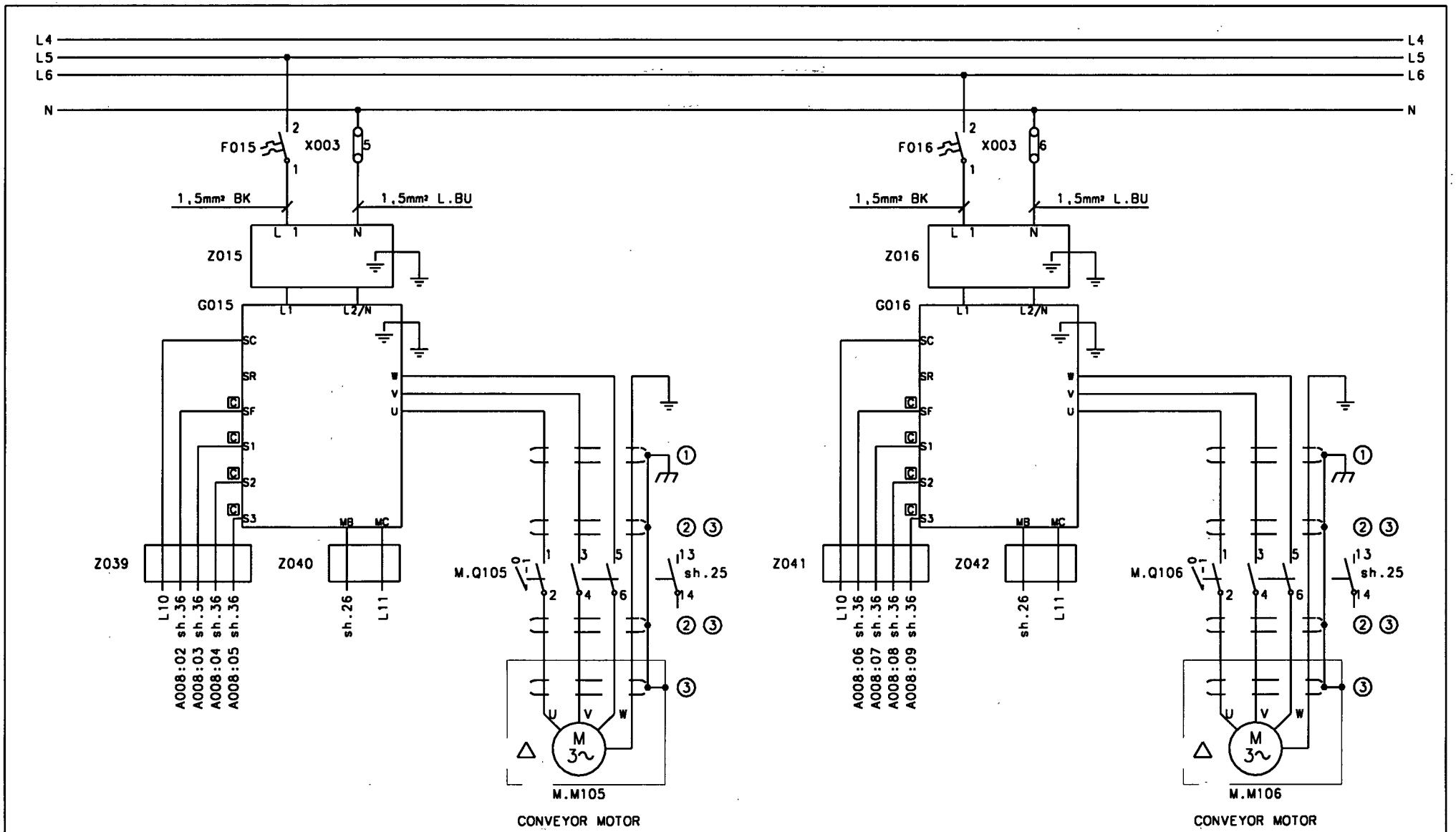

TETRA EASY RIDE PLUS

Note	AA				① SCREEN CONNECTED TO EMC-CLAMP	Tetra Pak	Designer PNO	Date 010101	Approved	Date	Doc. class –
ECN No.	85617				② CABELGLAND CONNECTED TO EMC-PLATE		Machine SEE ABOVE	Denomination CIRCUIT DIAGRAM		
Sign./Date	AMM/010101				③ SCREEN CONNECTED TO EMC-CABLEGLAND	Company Tetra Brik PS AB		Drawing No 45068-0008		Page –
Appr./Date					Drawing remarks					

This drawing must not without the consent of Tetra Pak:
be copied, transmitted or disclosed to any third party.

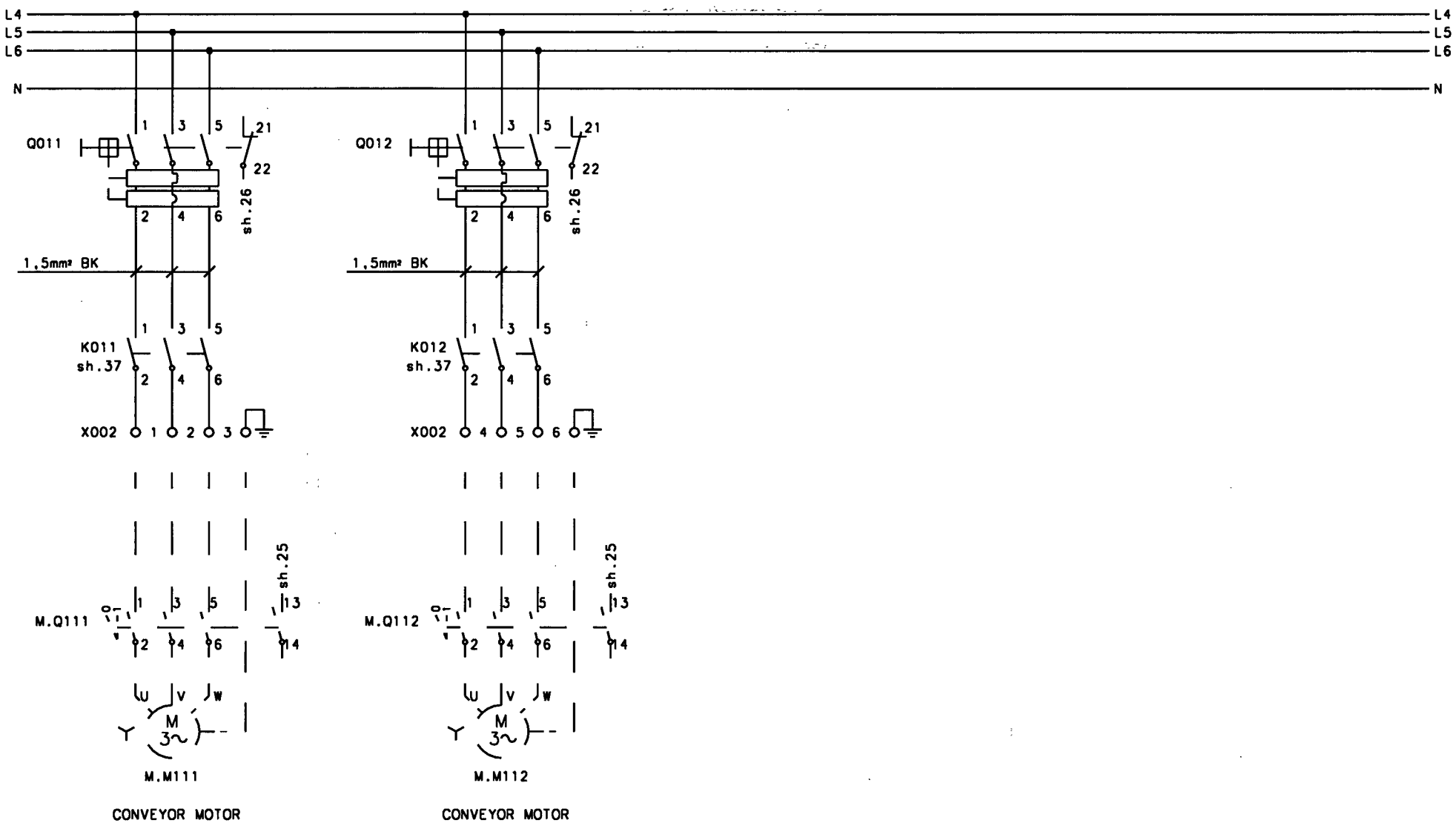

TETRA EASY RIDE PLUS

Note	AA					Tetra Pak	Designer PNO	Date 010101	Approved	Date	Doc. class –
ECN No.	85617						Machine SEE ABOVE	Denomination CIRCUIT DIAGRAM			
Sign./Date	AMM/010101					Company Tetra Brik PS AB		Drawing No 45068-0009			Page –
Appr./Date						Drawing remarks					

This drawing must not without the consent of Tetra Pak:
be copied, transmitted or disclosed to any third party.

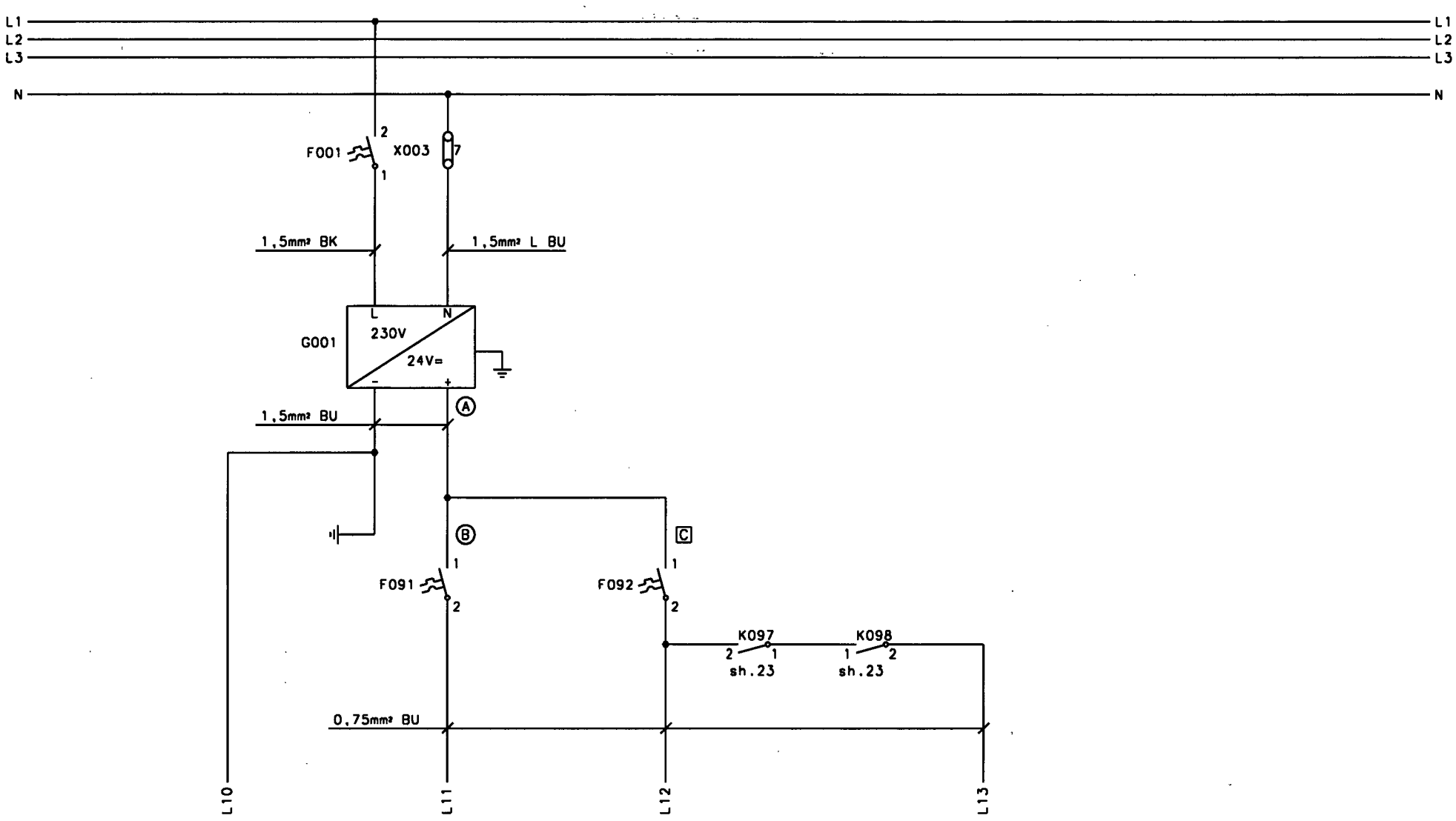

TETRA EASY RIDE PLUS

Note	AA					Tetra Pak	Designer PNO	Date 010101	Approved	Date	Doc. class –
ECN No.	85617						Machine SEE ABOVE	Denomination CIRCUIT DIAGRAM			
Sign./Date	AMM/010101					Company Tetra Brik PS AB		Drawing No 45068-0020			Page –
Appr./Date					Drawing remarks						

This drawing must not without the consent of Tetra Pak: be copied, transmitted or disclosed to any third party.

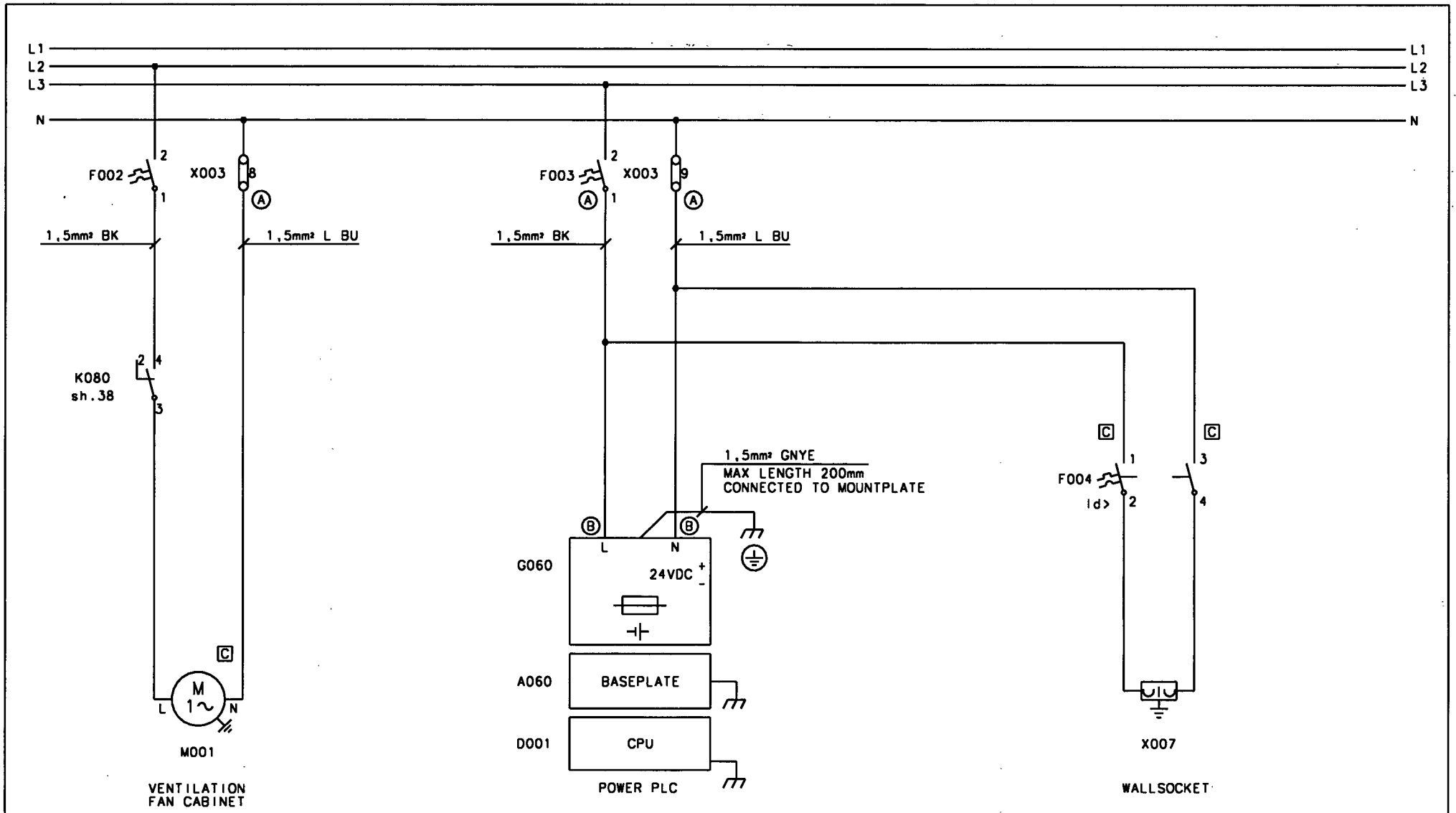

TETRA EASY RIDE PLUS

Note	AA					Tetra Pak	Designer PNO	Date 010101	Approved	Date	Doc. class –
ECN No.	85617						Machine SEE ABOVE	Denomination CIRCUIT DIAGRAM			
Sign./Date	AMM/010101										
Appr./Date						Drawing remarks	Company Tetra Brik PS AB	Drawing No 45068-0021			Page –

This drawing must not without the consent of Tetra Pak:
be copied, transmitted or disclosed to any third party.

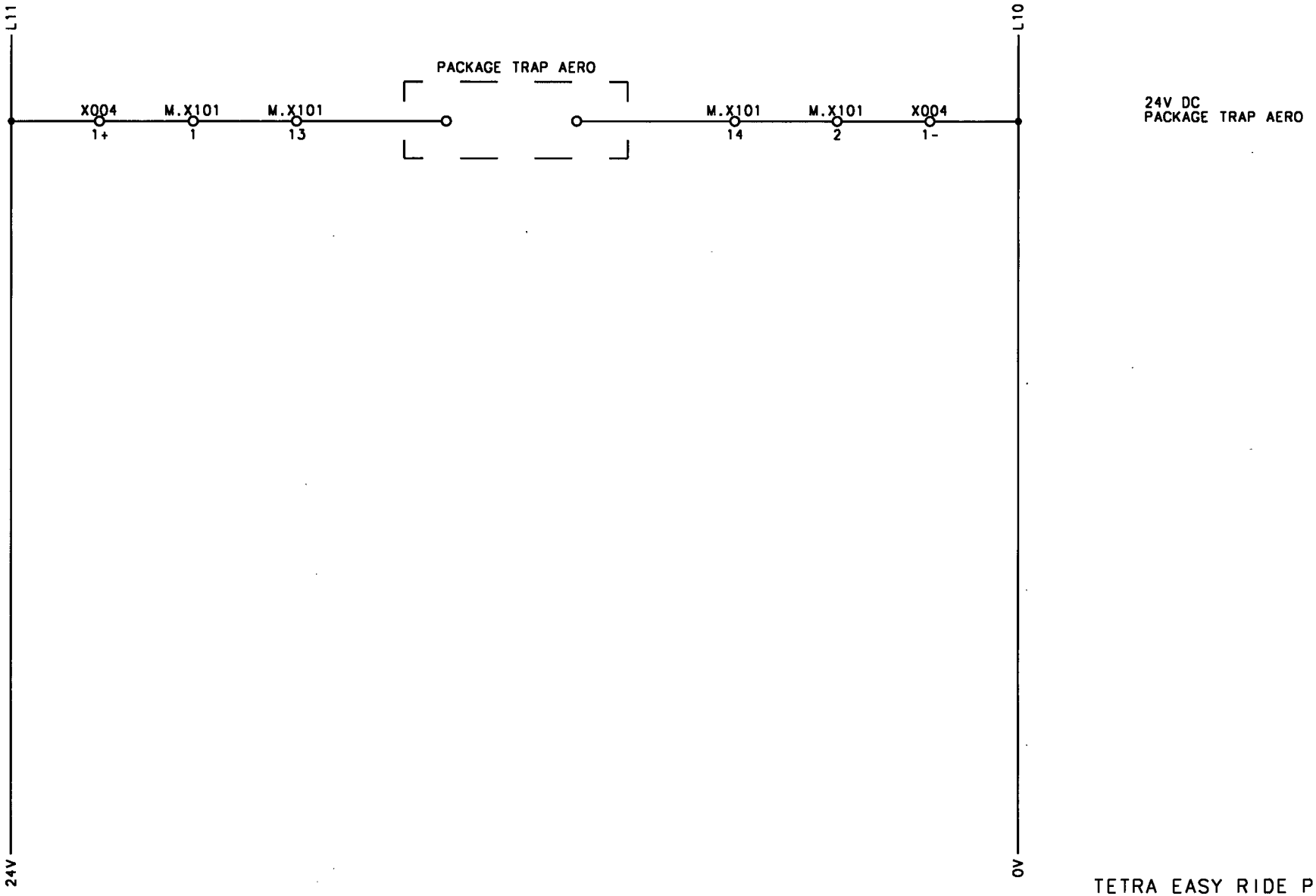

TETRA EASY RIDE PLUS

Note	AA					Tetra Pak	Designer PNO	Date 010101	Approved	Date	Doc. class –
ECN No.	85617						Machine SEE ABOVE	Denomination CIRCUIT DIAGRAM			
Sign./Date	AMM/010101					Company Tetra Brik PS AB		Drawing No 45068-0022			Page –
Appr./Date						Drawing remarks					

This drawing must not without the consent of Tetra Pak:
be copied, transmitted or disclosed to any third party.

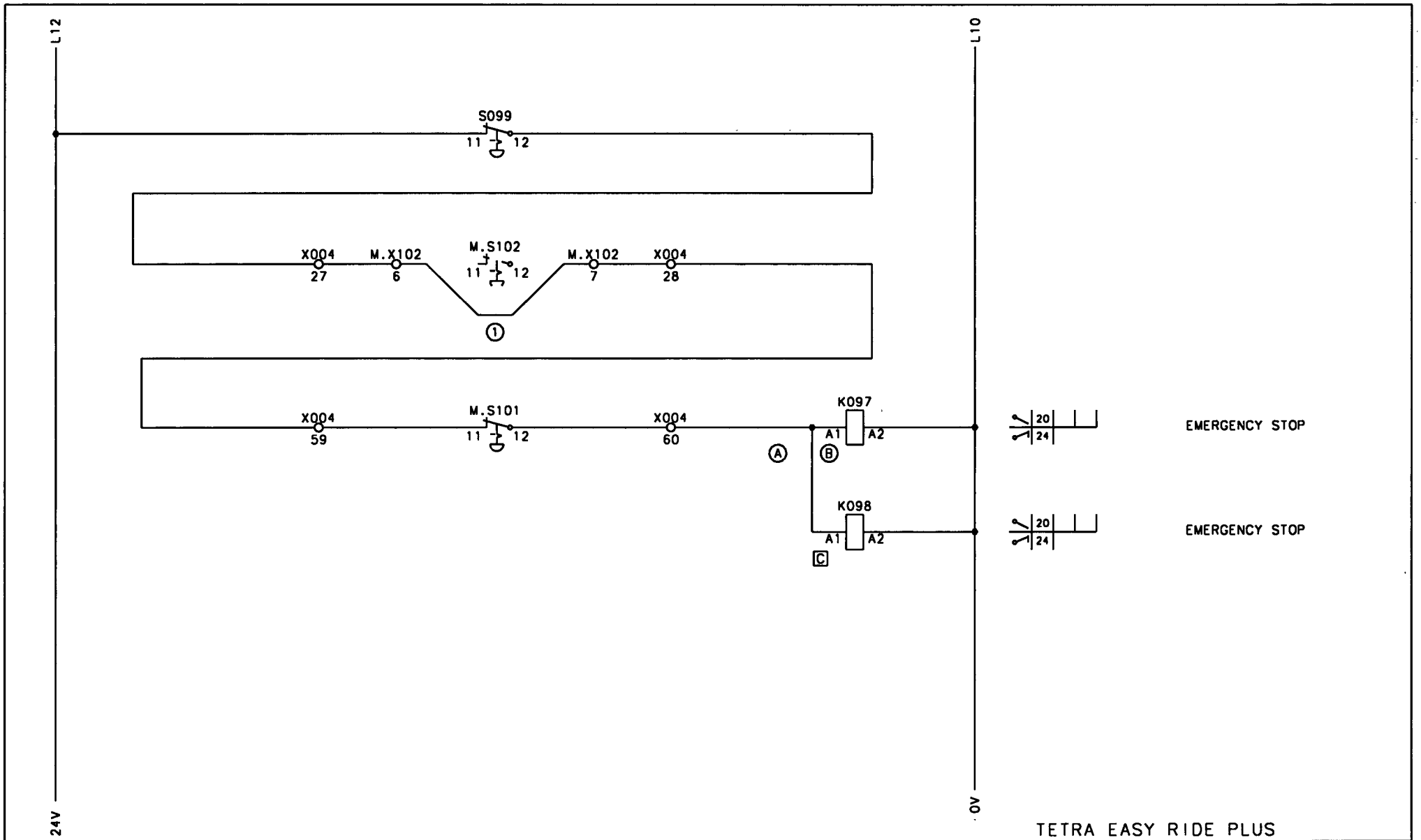

TETRA EASY RIDE PLUS

Note	AA				1 TO BE DISCONNECTED IF EXTERNAL	Tetra Pak	Designer PNO	Date 010101	Approved	Date	Doc. class –
ECN No.	85617				EMERGENCY STOP IS USED		Machine SEE ABOVE	Denomination CIRCUIT DIAGRAM		
Sign./Date	AMM/010101					Company Tetra Brik PS AB		Drawing No 45068-0023		Page –
Appr./Date					Drawing remarks					

This drawing must not without the consent of Tetra Pak:
be copied, transmitted or disclosed to any third party.

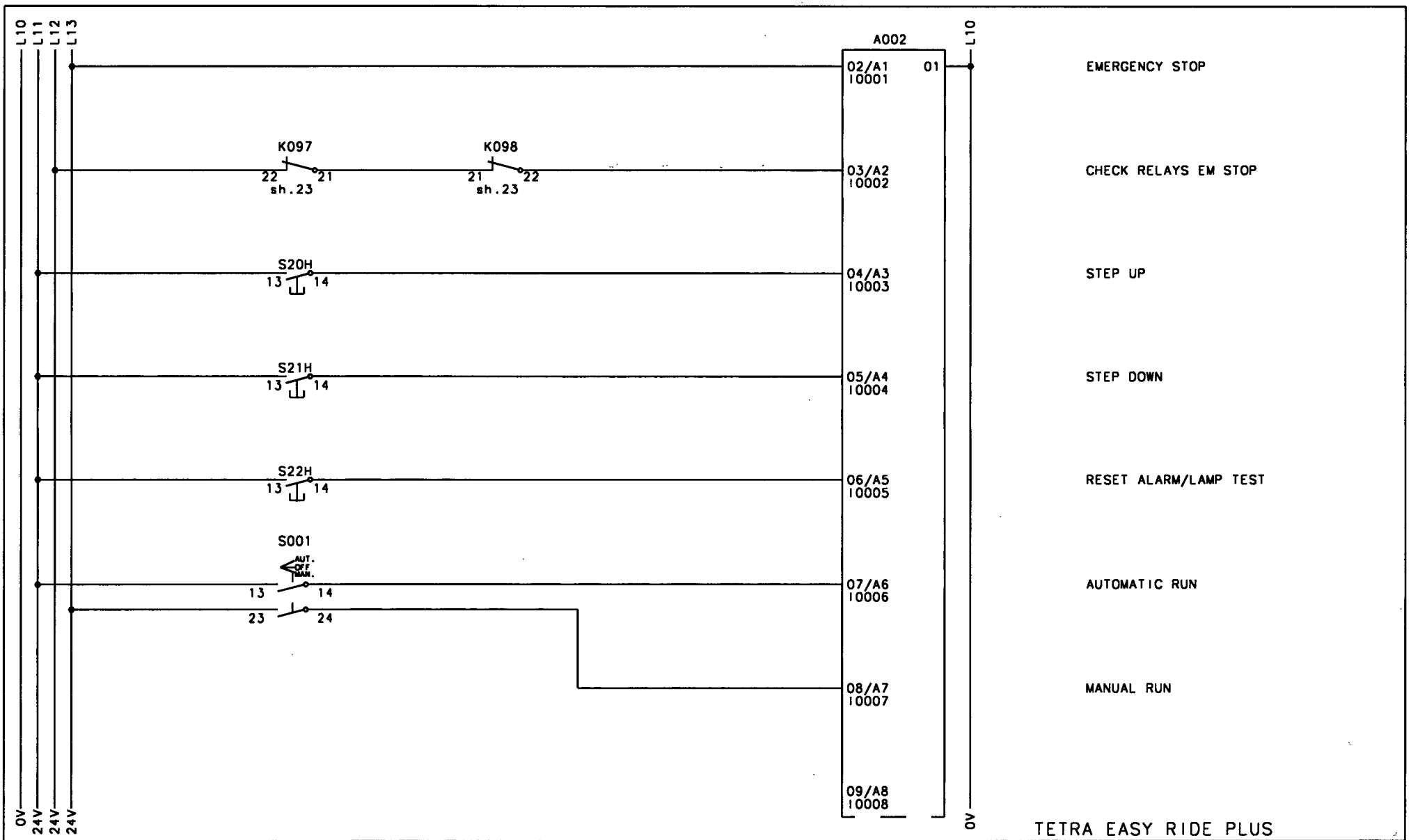

TETRA EASY RIDE PLUS

Note	AA					Tetra Pak	Designer PNO	Date 010101	Approved	Date	Doc. class –
ECN No.	85617						Machine SEE ABOVE	Denomination CIRCUIT DIAGRAM			
Sign./Date	AMM/010101					Company Tetra Brik PS AB		Drawing No 45068-0024			Page –
Appr./Date					Drawing remarks						

This drawing must not without the consent of Tetra Pak: be copied, transmitted or disclosed to any third party.

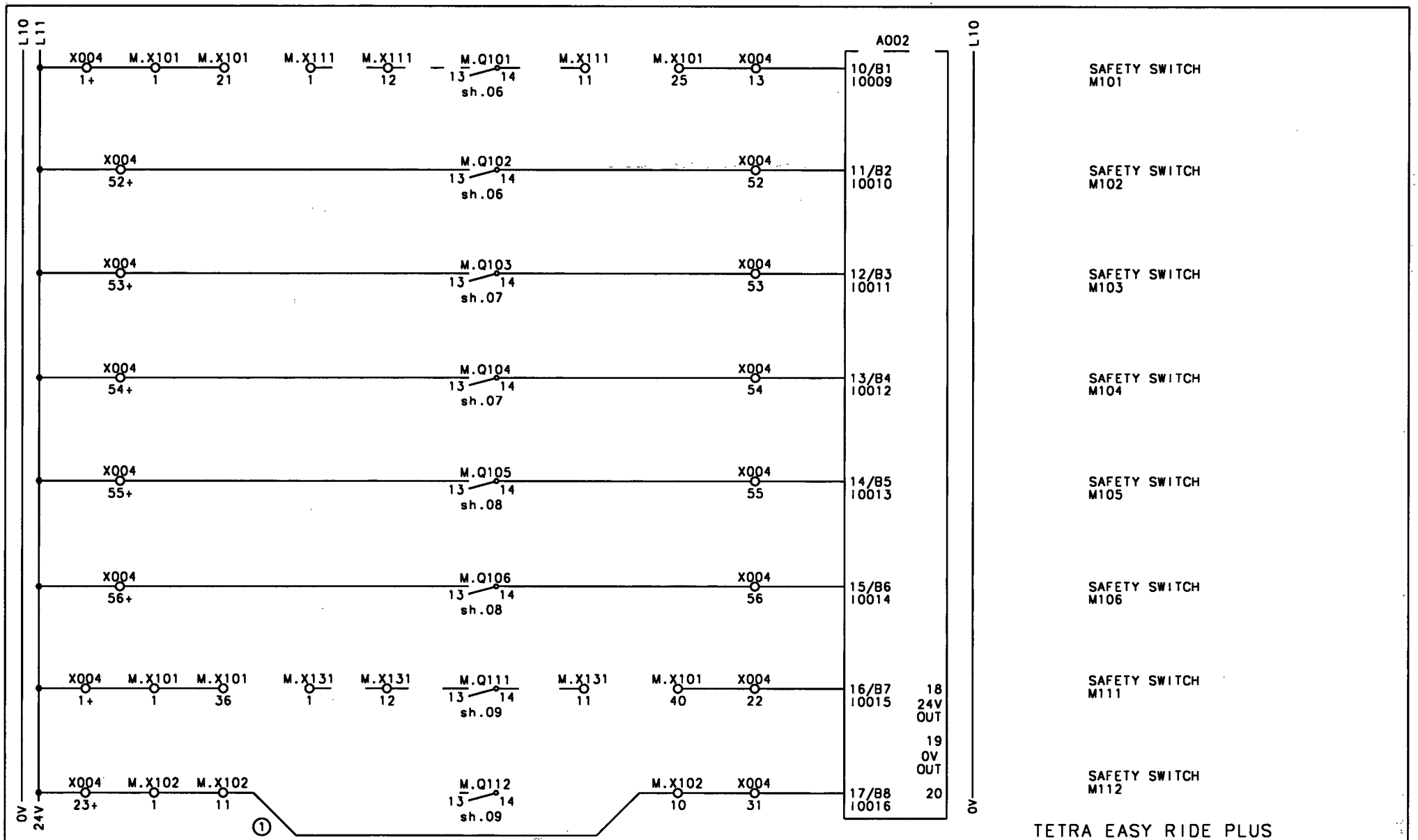

TETRA EASY RIDE PLUS

Note	AA				1 TO BE REMOVED IF SAFETY SWITCH	Tetra Pak	Designer PNO	Date 010101	Approved	Date	Doc. class –
ECN No.	85617				IS TO BE CONNECTED		Machine SEE ABOVE	Denomination CIRCUIT DIAGRAM		
Sign./Date	AMM/010101					Company Tetra Brik PS AB		Drawing No 45068-0025		Page –
Appr./Date					Drawing remarks					

This drawing must not without the consent of Tetra Pak:
be copied, transmitted or disclosed to any third party.

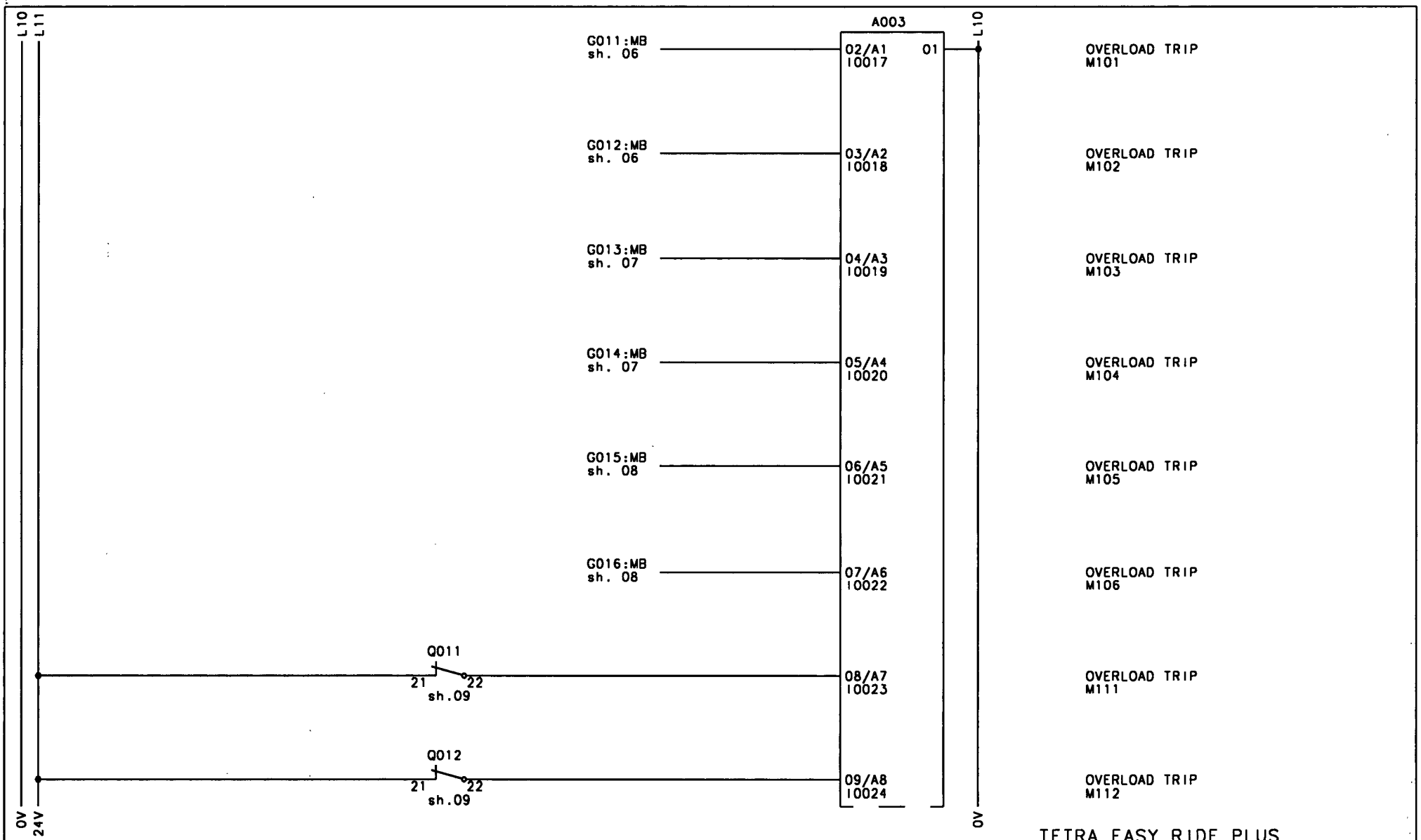

TETRA EASY RIDE PLUS

Note	AA					Tetra Pak	Designer PNO	Date 010101	Approved	Date	Doc. class -
ECN No.	85617						Machine SEE ABOVE	Denomination CIRCUIT DIAGRAM			
Sign./Date	AMM/010101					Company Tetra Brik PS AB		Drawing No 45068-0026			Page -
Appr./Date					Drawing remarks						

This drawing must not without the consent of Tetra Pak:
be copied, transmitted or disclosed to any third party.

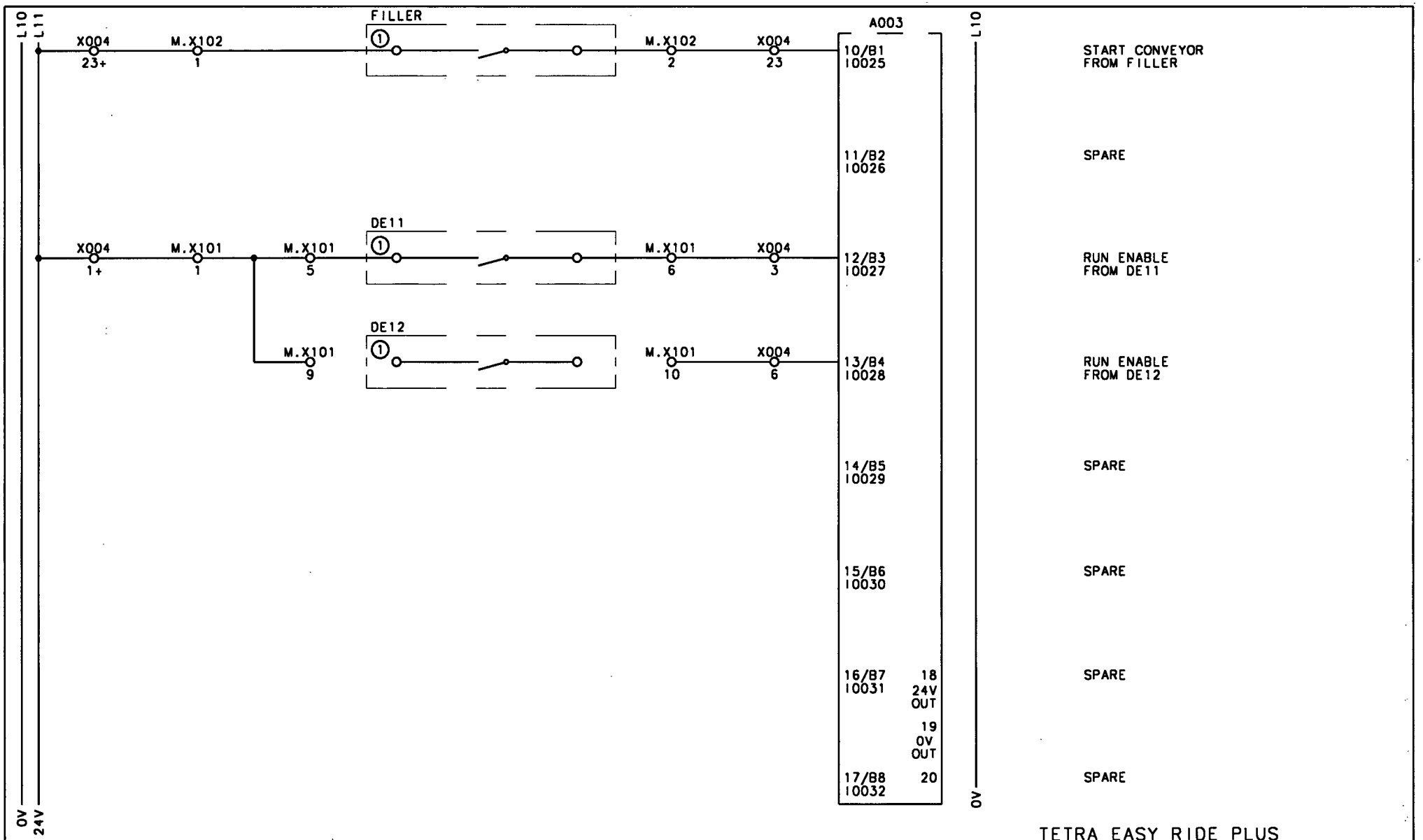

TETRA EASY RIDE PLUS

Note	AA					1 FOR CONNECTION SEE IN MACHINE MANUAL	Tetra Pak	Designer PNO	Date 010101	Approved Date	Doc. class –
ECN No.	85617							Machine SEE ABOVE	Denomination CIRCUIT DIAGRAM	
Sign./Date	AMM/010101						Company Tetra Brik PS AB		Drawing No 45068-0027	Page –
Appr./Date						Drawing remarks				

This drawing must not without the consent of Tetra Pak: be copied, transmitted or disclosed to any third party.

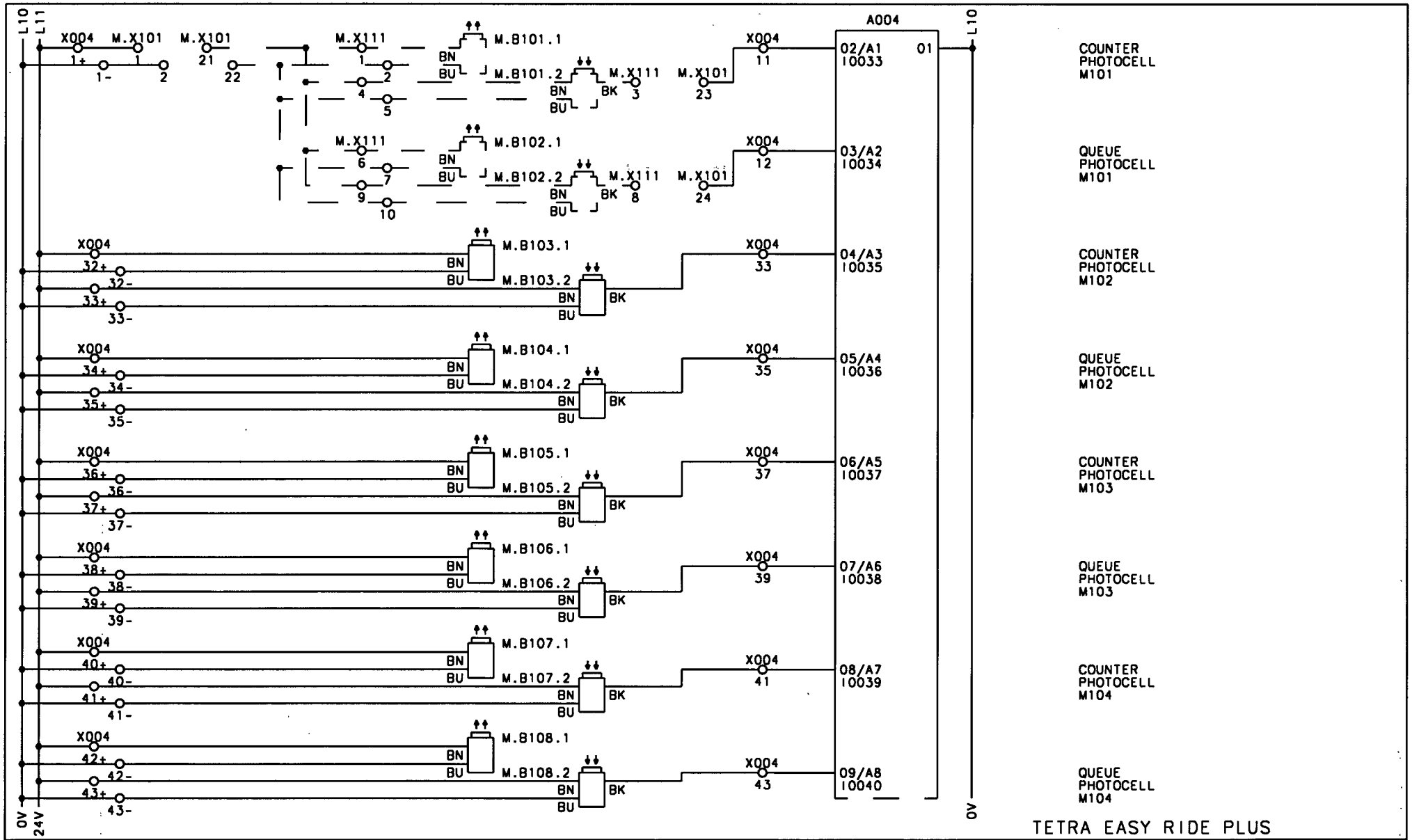

TETRA EASY RIDE PLUS

Note	AA					Tetra Pak	Designer PNO	Date 010101	Approved	Date	Doc. class –
ECN No.	85617						Machine SEE ABOVE	Denomination CIRCUIT DIAGRAM		
Sign./Date	AMM/010101									
Appr./Date					Drawing remarks	Company Tetra Brik PS AB		Drawing No 45068-0028		Page –

This drawing must not without the consent of Tetra Pak: be copied, transmitted or disclosed to any third party.

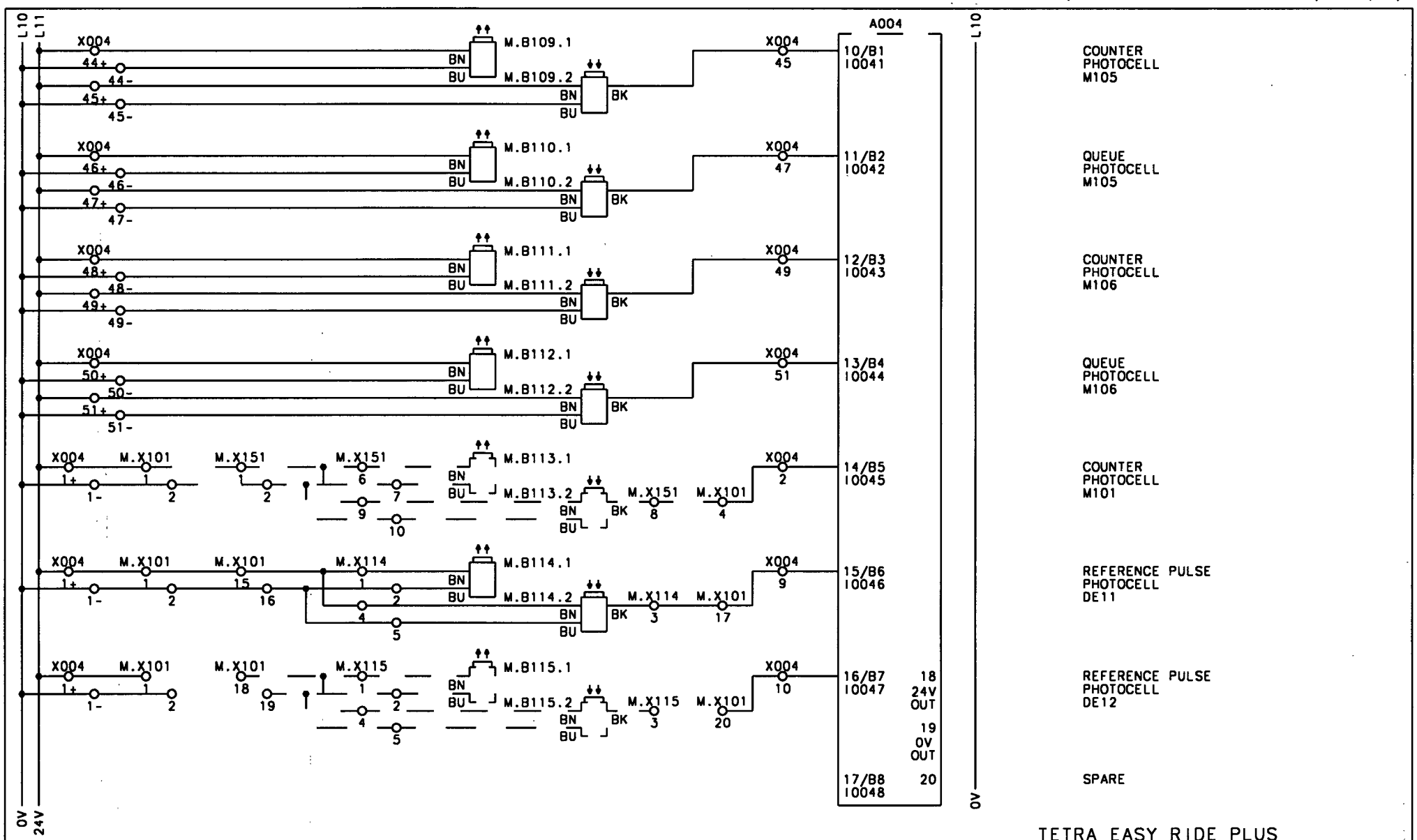

TETRA EASY RIDE PLUS

Note	AA					Tetra Pak	Designer PNO	Date 010101	Approved	Date	Doc. class -
ECN No.	85617						Machine SEE ABOVE	Denomination CIRCUIT DIAGRAM		
Sign./Date	AMM/010101									
Appr./Date						Drawing remarks	Company Tetra BRIK PS AB	Drawing No 45068-0029		Page -

This drawing must not without the consent of Tetra Pak: be copied, transmitted or disclosed to any third party.

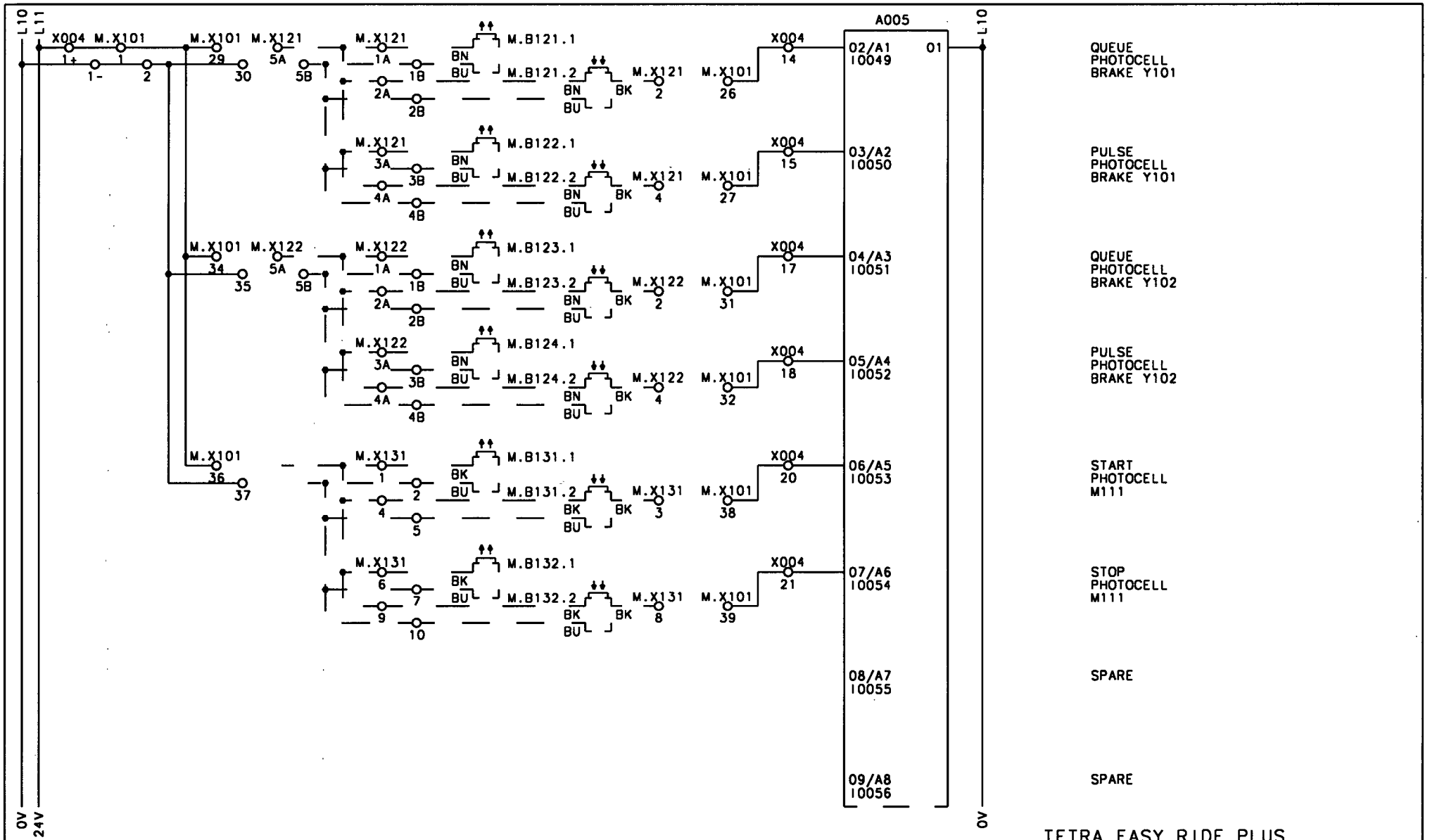

TETRA EASY RIDE PLUS

Note	AA					Tetra Pak	Designer PNO	Date 010101	Approved	Date	Doc. class -
ECN No.	85617						Machine SEE ABOVE	Denomination CIRCUIT DIAGRAM		
Sign./Date	AMM/010101									
Appr./Date					Drawing remarks	Company Tetra BRIK PS AB		Drawing No 45068-0030		Page -

This drawing must not without the consent of Tetra Pak:
be copied, transmitted or disclosed to any third party.

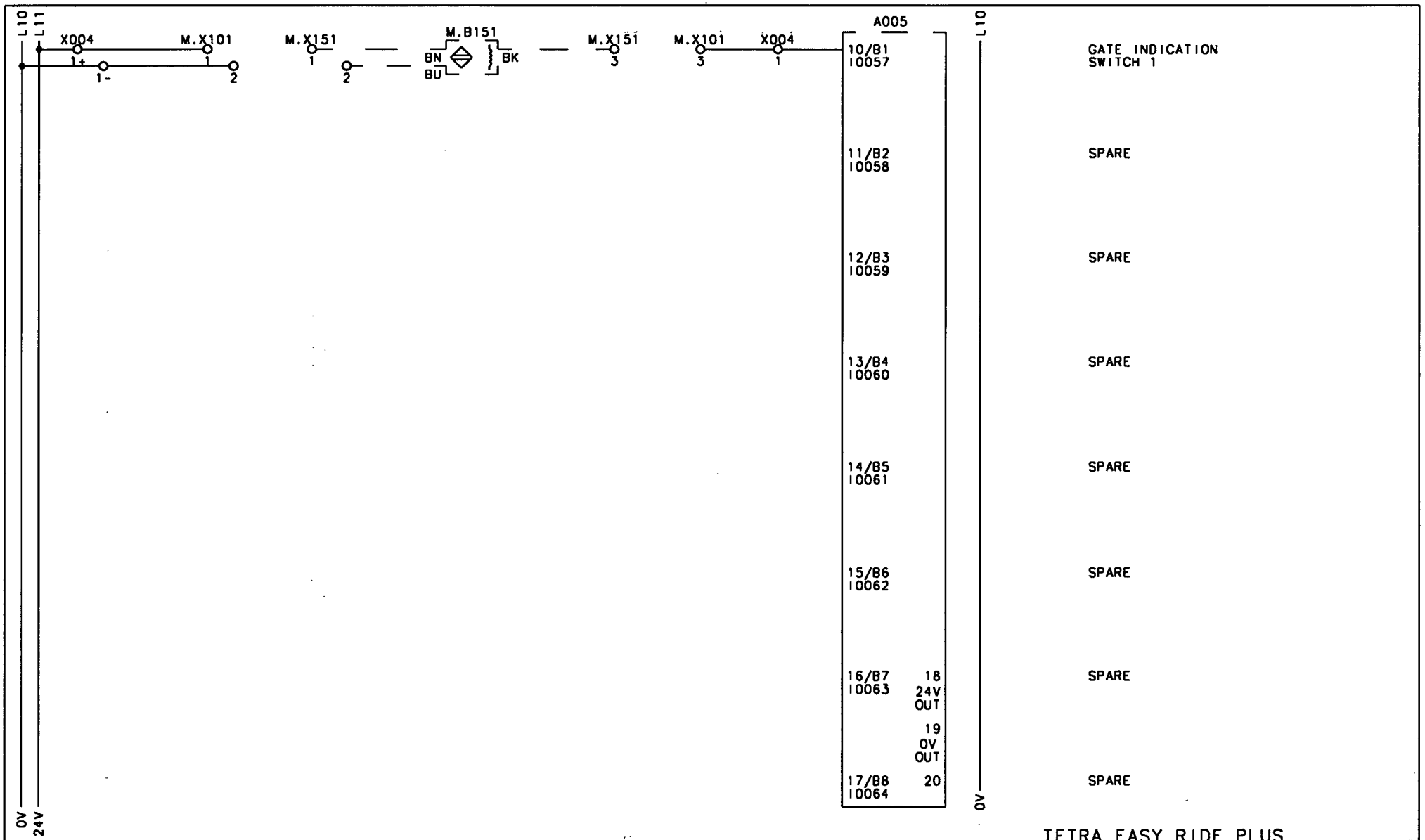

TETRA EASY RIDE PLUS

Note	AA					Tetra Pak	Designer PNO	Date 010101	Approved	Date	Doc. class –
ECN No.	85617						Machine SEE ABOVE	Denomination CIRCUIT DIAGRAM		
Sign./Date	AMM/010101									
Appr./Date					Drawing remarks	Company Tetra Brik PS AB		Drawing No 45068-0031		Page –

This drawing must not without the consent of Tetra Pak:
be copied, transmitted or disclosed to any third party.

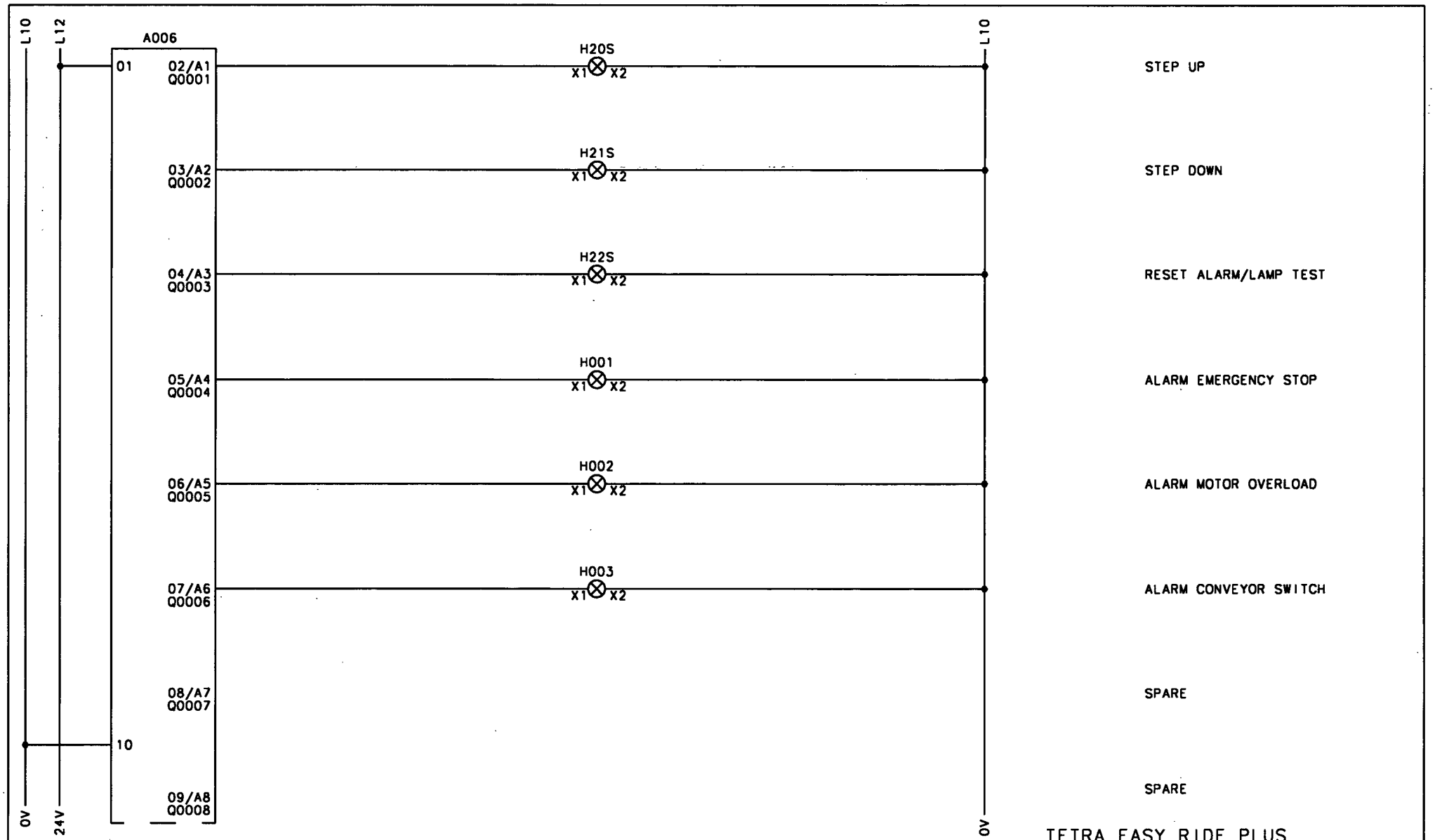

TETRA EASY RIDE PLUS

Note	AA					Designer PNO	Date 010101	Approved	Date	Doc. class -
ECN No.	85617					Tetra Pak	Machine SEE ABOVE	Denomination CIRCUIT DIAGRAM		
Sign./Date	AMM/010101									
Appr./Date					Drawing remarks	Company Tetra Brik PS AB		Drawing No 45068-0032		Page -

This drawing must not without the consent of Tetra Pak:
be copied, transmitted or disclosed to any third party.

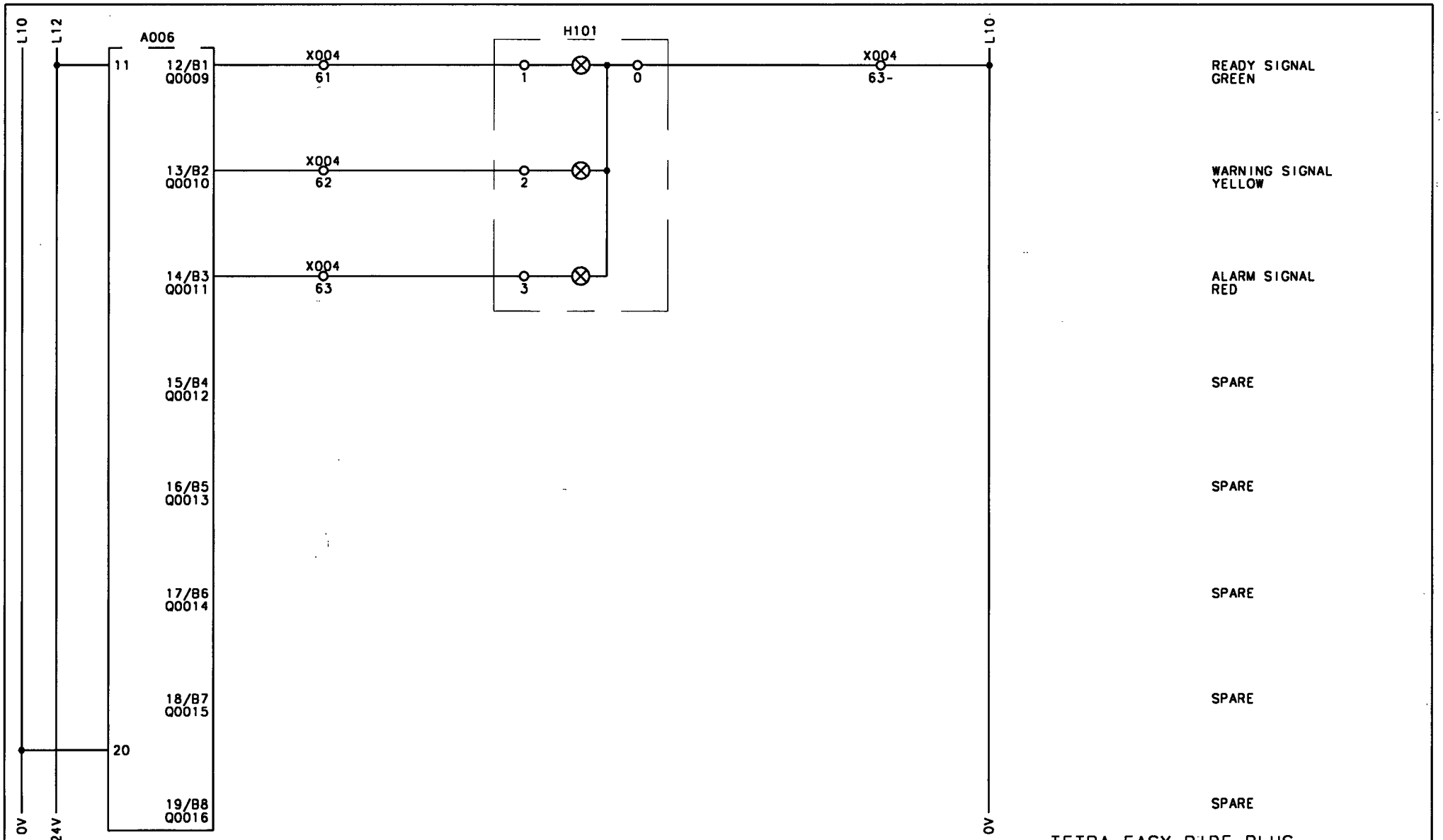

TETRA EASY RIDE PLUS

Note	AA					Designer PNO	Date 010101	Approved	Date	Doc. class -
ECN No.	85617					Tetra Pak	Machine SEE ABOVE	Denomination CIRCUIT DIAGRAM		
Sign./Date	AMM/010101									
Appr./Date					Drawing remarks	Company Tetra Brik PS AB		Drawing No 45068-0033		Page -

This drawing must not without the consent of Tetra Pak:
be copied, transmitted or disclosed to any third party.

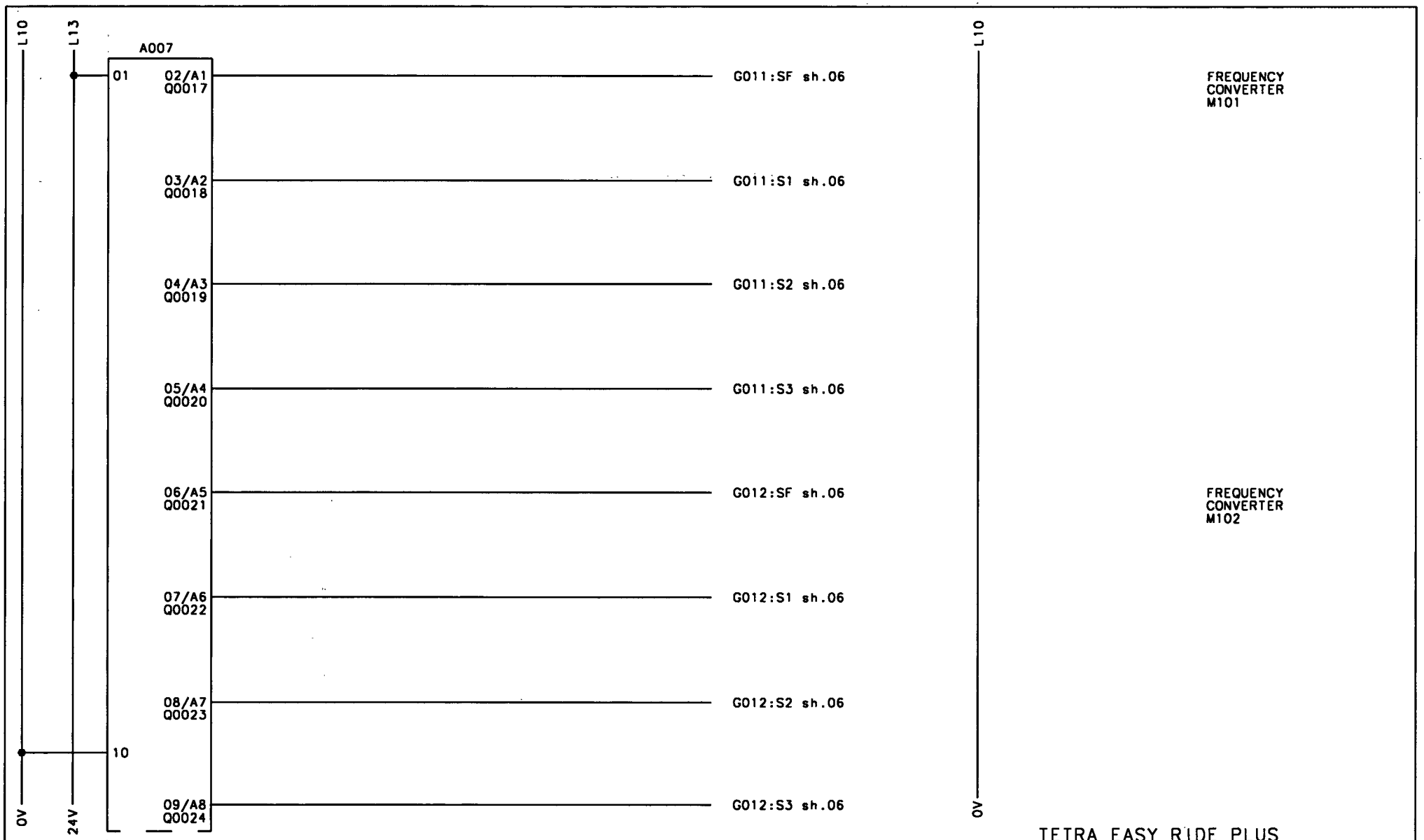

TETRA EASY RIDE PLUS

Note	AA					Tetra Pak	Designer PNO	Date 010101	Approved	Date	Doc. class –
ECN No.	85617						Machine SEE ABOVE	Denomination CIRCUIT DIAGRAM			
Sign./Date	AMM/010101										
Appr./Date						Drawing remarks	Company Tetra Brik PS AB	Drawing No 45068-0034			Page -

This drawing must not without the consent of Tetra Pak:
be copied, transmitted or disclosed to any third party.

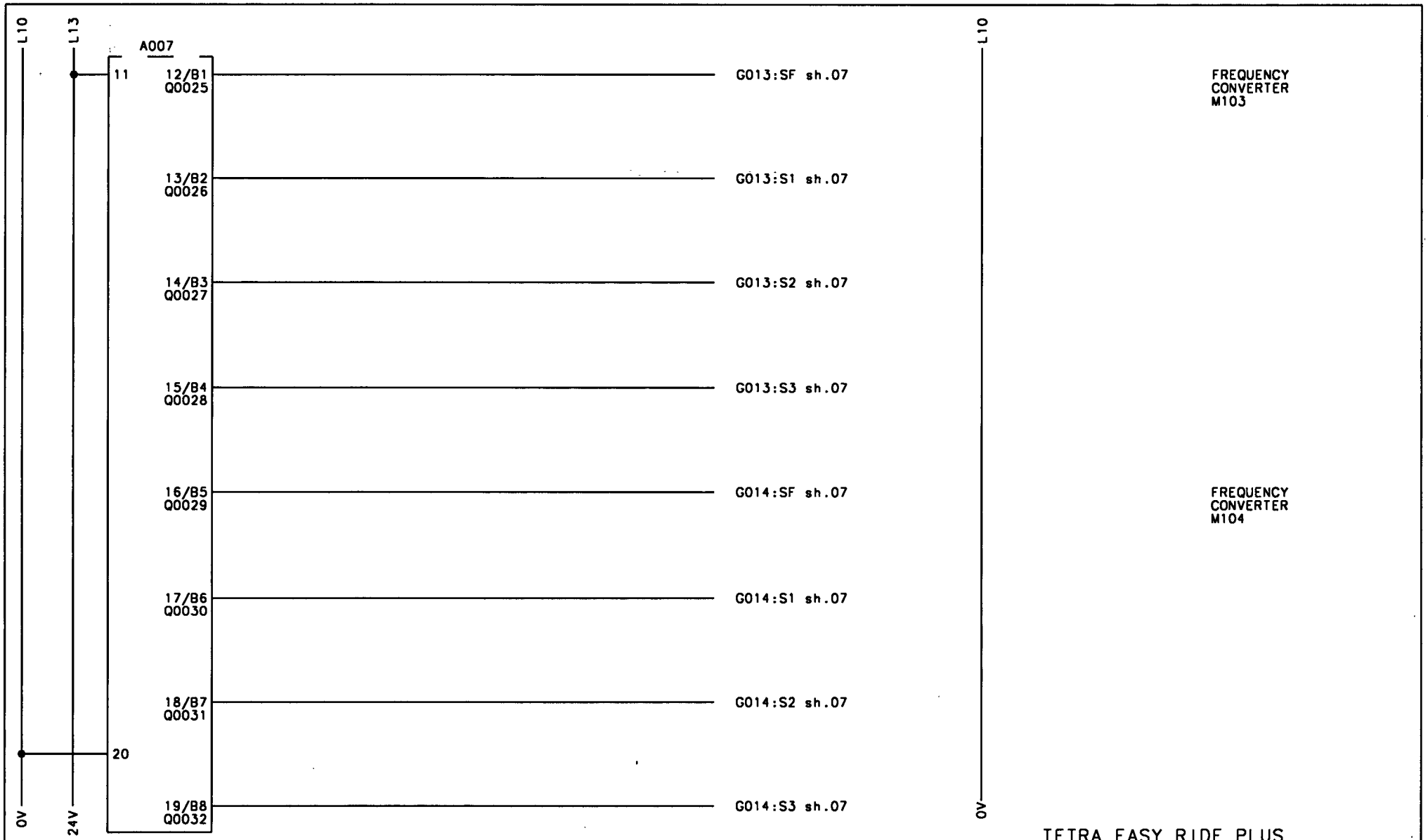

TETRA EASY RIDE PLUS

Note	AA					Tetra Pak	Designer PNO	Date 010101	Approved	Date	Doc. class -
ECN No.	85617						Machine SEE ABOVE	Denomination CIRCUIT DIAGRAM			
Sign./Date	AMM/010101						Company Tetra Brik PS AB	Drawing No 45068-0035			Page -
Appr./Date						Drawing remarks					

This drawing must not without the consent of Tetra Pak:
be copied, transmitted or disclosed to any third party.

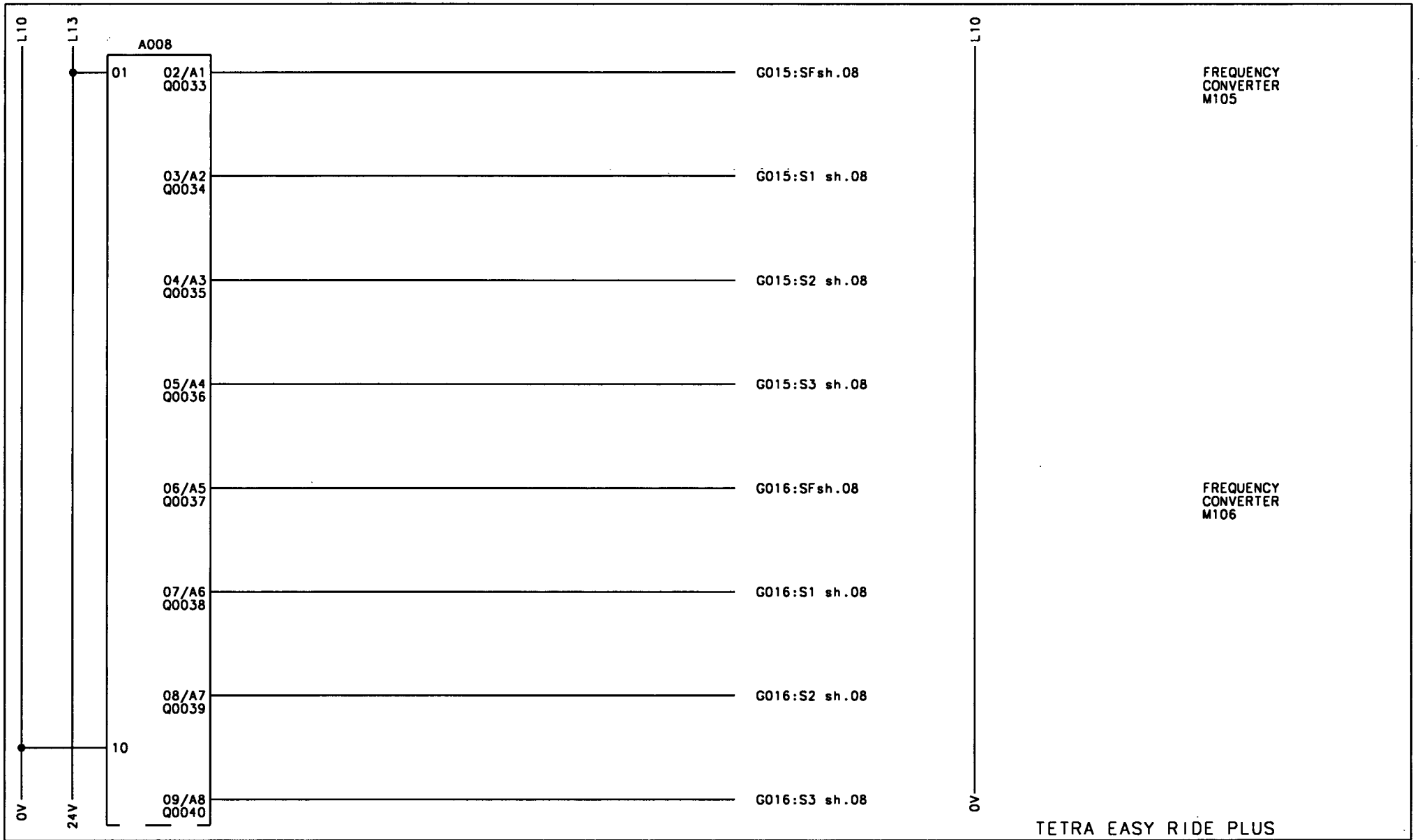

TETRA EASY RIDE PLUS

Note	AA					Designer PNO	Date 010101	Approved	Date	Doc. class –
ECN No.	85617					Tetra Pak	Machine SEE ABOVE	Denomination CIRCUIT DIAGRAM		
Sign./Date	AMM/010101									
Appr./Date					Drawing remarks	Company Tetra Brik PS AB		Drawing No 45068-0036		Page –

This drawing must not without the consent of Tetra Pak: be copied, transmitted or disclosed to any third party.

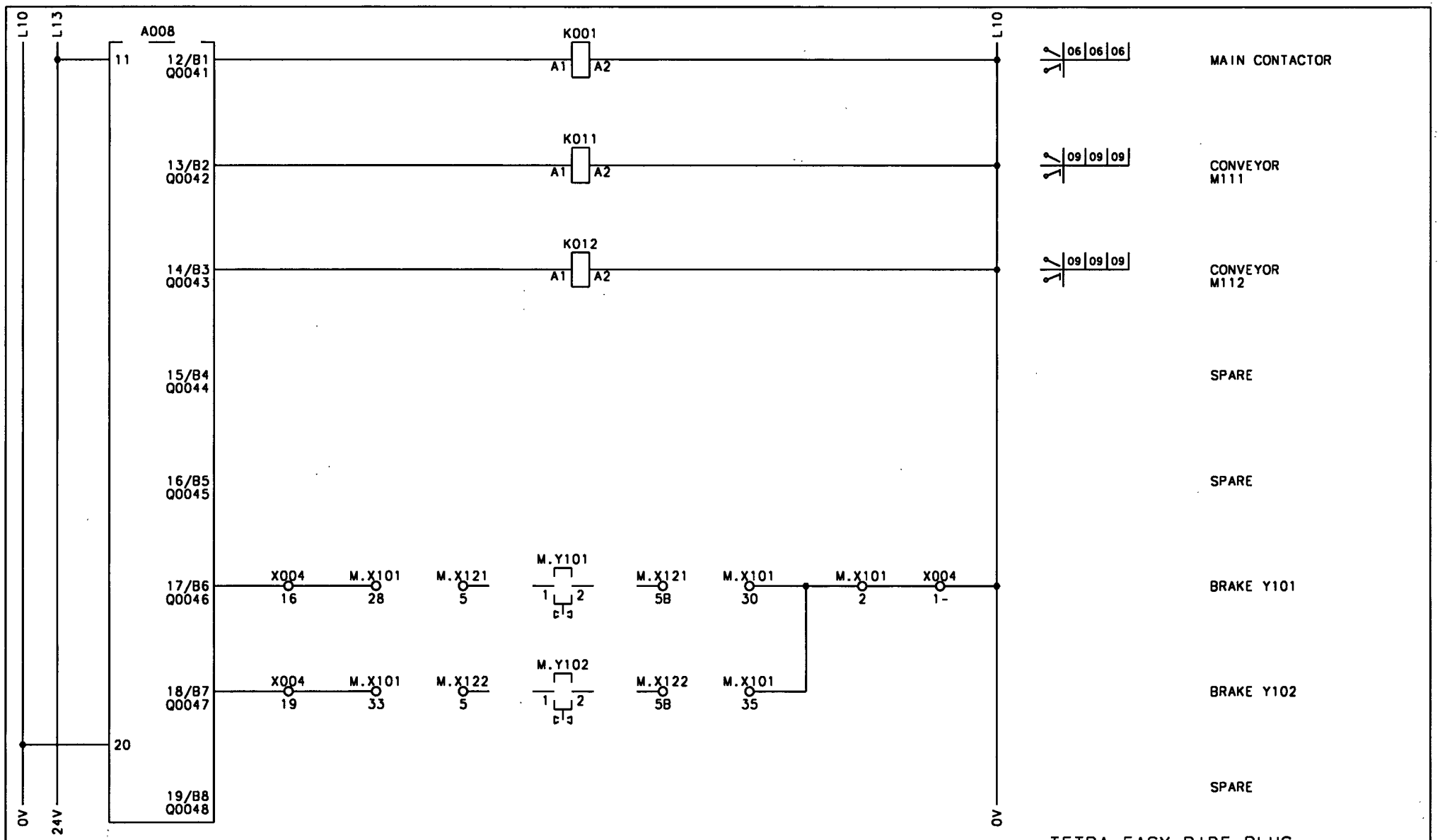

TETRA EASY RIDE PLUS

Note	AA					Tetra Pak	Designer PNO	Date 010101	Approved	Date	Doc. class –
ECN No.	85617						Machine SEE ABOVE	Denomination CIRCUIT DIAGRAM			
Sign./Date	AMM/010101						Company Tetra Brik PS AB	Drawing No 45068-0037			Page –
Appr./Date						Drawing remarks					

This drawing must not without the consent of Tetra Pak: be copied, transmitted or disclosed to any third party.

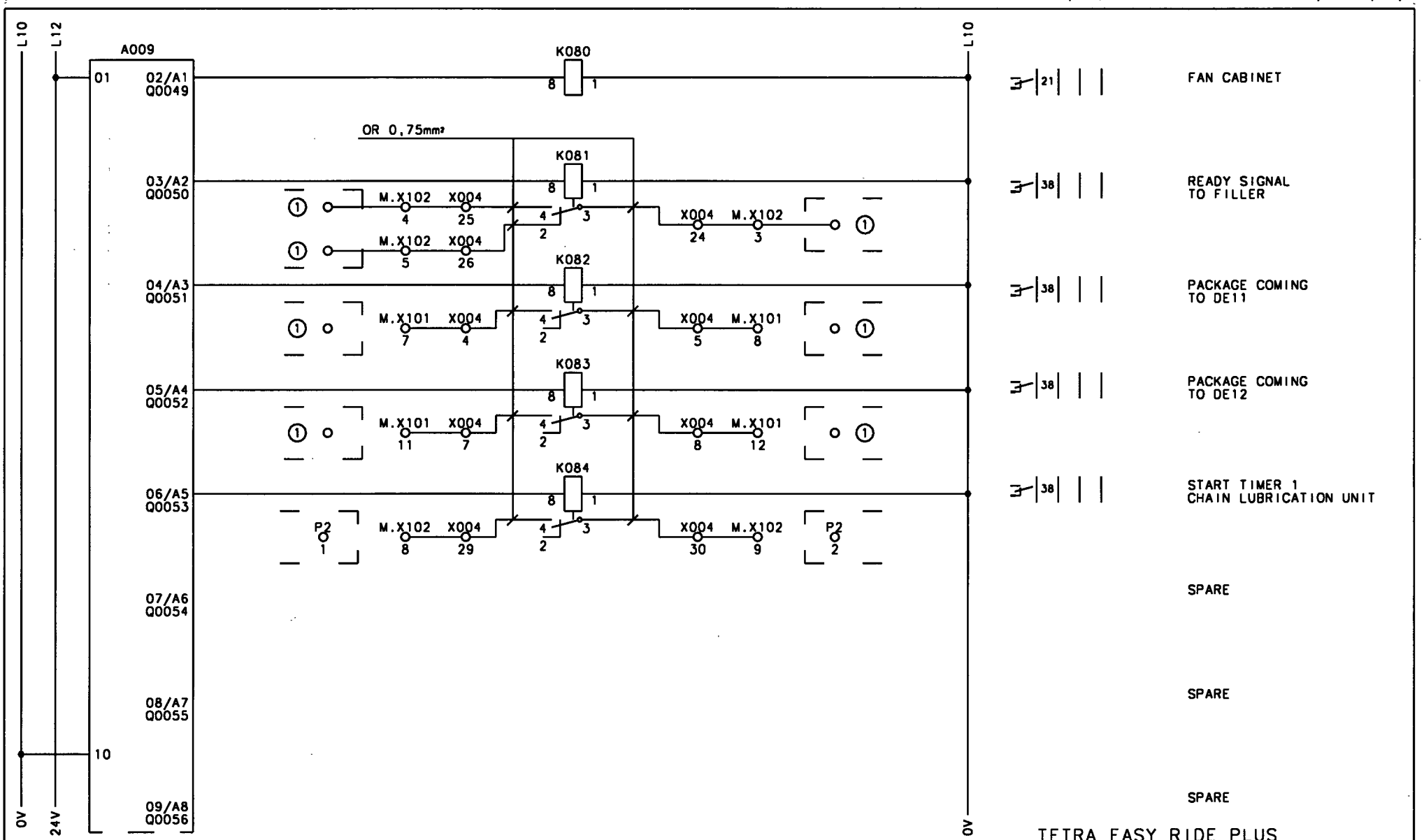

TETRA EASY RIDE PLUS

Note	AA					① FOR CONNECTION SEE MACHINE MANUAL	Tetra Pak	Designer PNO	Date 010101	Approved	Date	Doc. class –
ECN No.	85617							Machine SEE ABOVE	Denomination CIRCUIT DIAGRAM			
Sign./Date	AMM/010101						Company Tetra Brik PS AB		Drawing No 45068-0038			Page –
Appr./Date						Drawing remarks						

This drawing must not without the consent of Tetra Pak:
be copied, transmitted or disclosed to any third party.

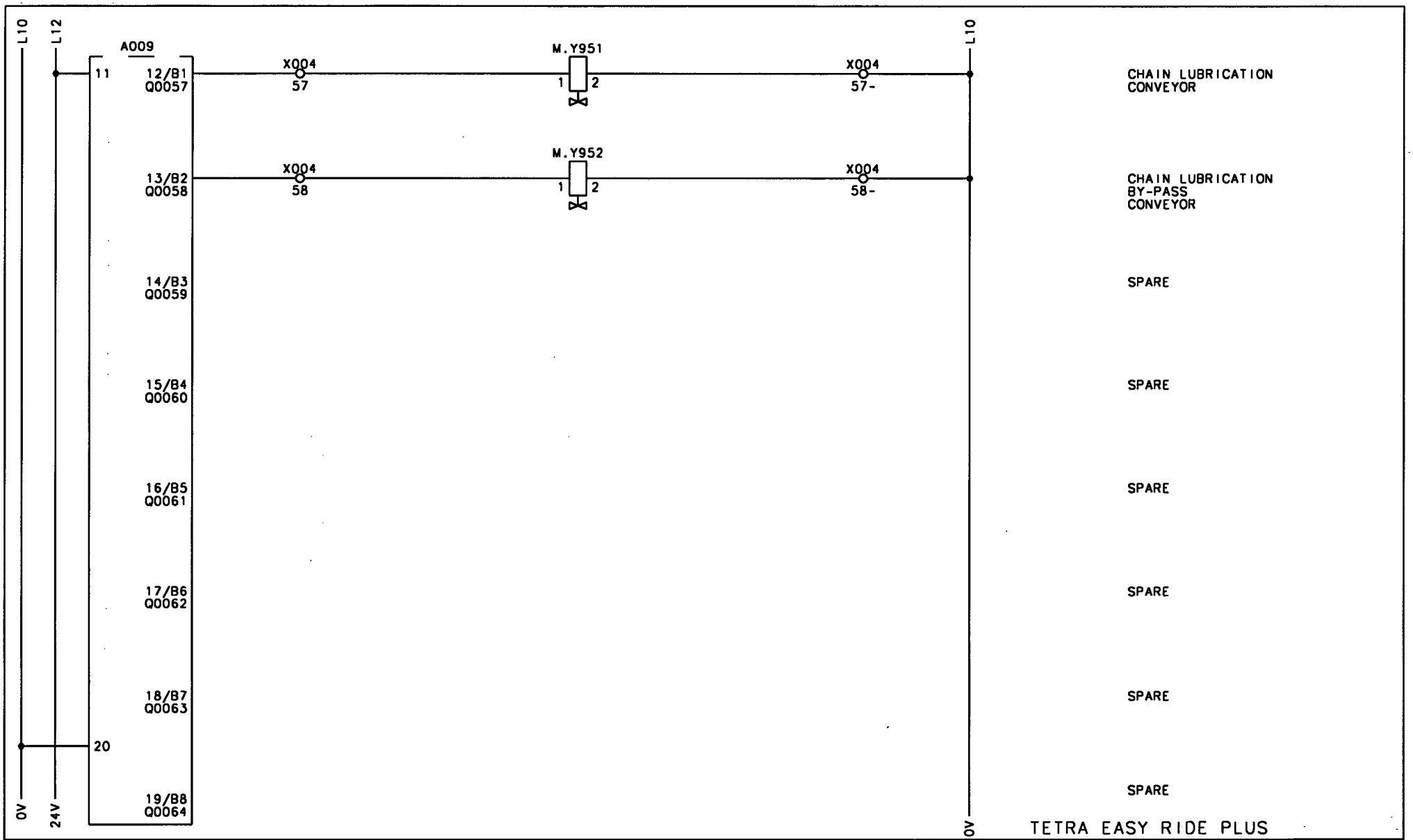

TETRA EASY RIDE PLUS

Note	AA					Tetra Pak	Designer PNO	Date 010101	Approved	Date	Doc. class –
ECN No.	85617						Machine SEE ABOVE	Denomination CIRCUIT DIAGRAM		
Sign./Date	AMM/010101					Company Tetra Brik PS AB		Drawing No 45068-0039		Page -
Appr./Date						Drawing remarks				

This drawing must not without the consent of Tetra Pak:
be copied, transmitted or disclosed to any third party.

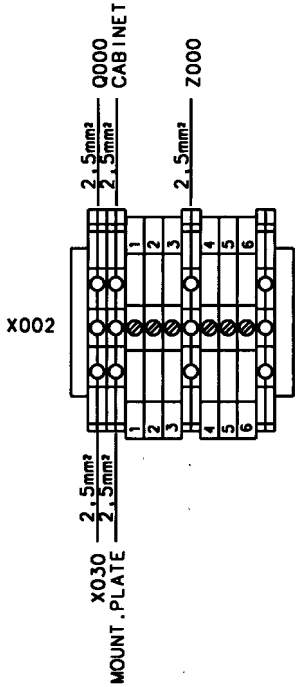

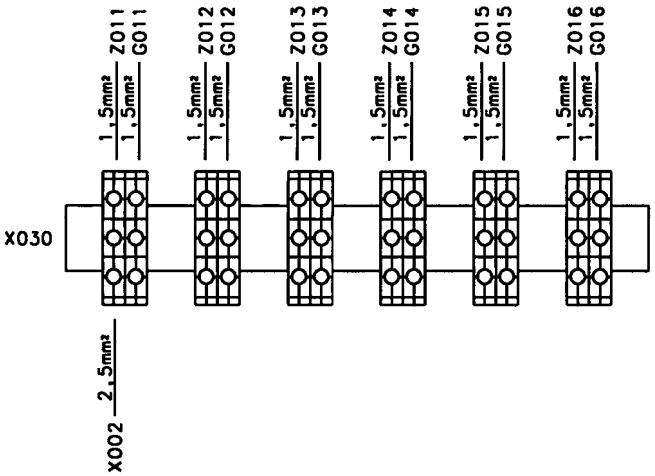

TETRA EASY RIDE PLUS

Note	AA					Tetra Pak	Designer PNO	Date 010101	Approved	Date	Doc. class –
ECN No.	85617						Machine SEE ABOVE	Denomination EARTH SUMMARY		
Sign./Date	AMM/010101					Company Tetra Brik PS AB		Drawing No 45068-0080		Page –
Appr./Date					Drawing remarks					

This drawing must not without the consent of Tetra Pak:
be copied, transmitted or disclosed to any third party.

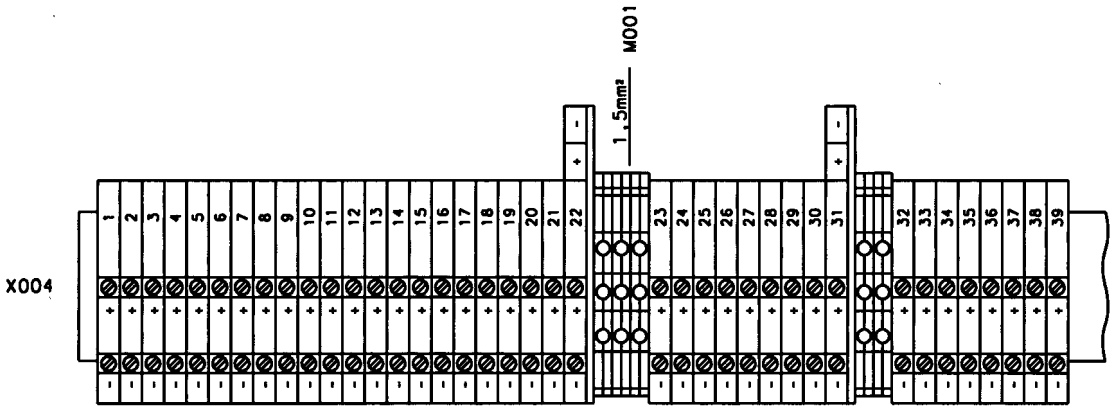

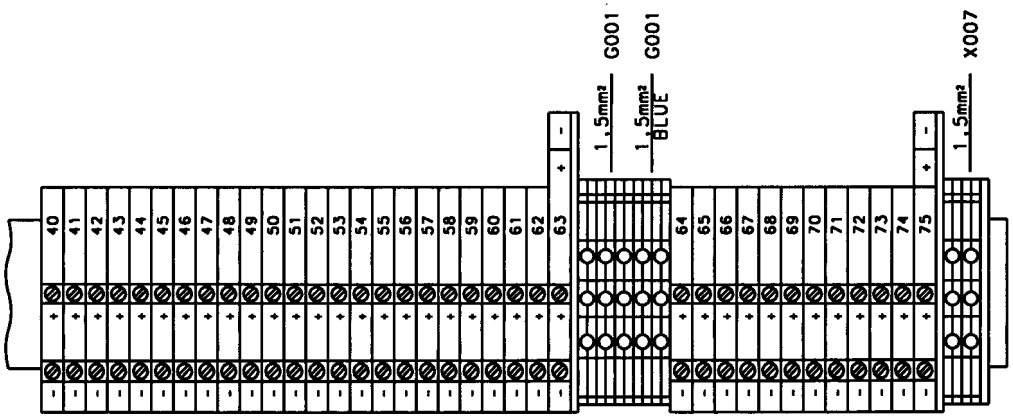

TETRA EASY RIDE PLUS

Note	AA					Tetra Pak	Designer PNO	Date 010101	Approved	Date	Doc. class –
ECN No.	85617						Machine SEE ABOVE	Denomination EARTH SUMMARY		
Sign./Date	AMM/010101									
Appr./Date					Drawing remarks		Company Tetra Brik PS AB	Drawing No 45068-0081		Page –

ECN 27947 'A'

Line	Position	Sheet	Area	Colour
L1	XL1,1		2,5	BK
	Q000,2	05:01		
	Z000,L1	05:01		
	,L1	05:01		
	K001,1	06:01		
	F001,2	20:01		
L2	XL2,1		2,5	BK
	Q000,4	05:01		
	Z000,L2	05:01		
	,L2	05:01		
	K001,3	06:01		
	F002,2	21:01		
L3	XL3,1		2,5	BK
	Q000,6	05:01		
	Z000,L3	05:01		
	,L3	05:01		
	K001,5	06:01		
	F003,2	21:01		
L4	XL4,1		2,5	BK
	K001,2	06:01		
	Q011,1	09:01		
	Q012,1	09:01		
	F011,2	06:01		
	F014,2	07:01		
L5	XL5,1		2,5	BK
	K001,4	06:01		
	Q011,3	09:01		
	Q012,3	09:01		
	F012,2	06:01		
	F015,2	08:01		
L6	XL6,1		2,5	BK
	K001,6	06:01		
	Q011,5	09:01		
	Q012,5	09:01		
	F013,2	07:01		
	F016,2	08:01		
L10	XL10,1		0.75	BU
	G001,-	20:01		
L10	XL10,2		0,75	BU
	G011,SC	06:01		
L10	XL10,3		0,75	BU
	G012,SC	06:01		
L10	XL10,4		0.75	BU
	G013,SC	07:01		
L10	XL10,5		0.75	BU
	G014,SC	07:01		
L10	XL10,6		0,75	BU
	G015,SC	08:01		
L10	XL10,7		0,75	BU
	G016,SC	08:01		
L10	XL10,8		0.75	BU

ECN 27947 'A'

Line	Position	Sheet	Area	Colour
L10	A002,01	24:01		
L10	XL10,9		0.75	BU
	A003,01	26:01		
L10	XL10,10		0.75	BU
	A004,01	28:01		
L10	XL10,11		0.75	BU
	A005,01	30:01		
L10	XL10,12		0,75	BU
	A006,10	32:01		
	,20	33:01		
L10	XL10,13		0.75	BU
	A007,10	34:01		
	,20	35:01		
L10	XL10,14		0.75	BU
	A008,10	36:01		
	,20	37:01		
L10	XL10,15		0,75	BU
	A009,10	38:01		
	,20	39:01		
L10	XL10,16		0,75	BU
	K001,A2	37:01		
	K011,A2	37:01		
	K012,A2	37:01		
	K097,A2	23:01		
	K098,A2	23:01		
	K080,1	38:01		
	K081,1	38:01		
	K082,1	38:01		
	K083,1	38:01		
	K084,1	38:01		
L10	XL10,17		0,75	BU
	X004,22-	20:01		
L10	XL10,18		0,75	BU
	X004,30-	20:01		
L10	XL10,19		0,75	BU
	X004,62-	20:01		
L10	XL10,20		0,75	BU
	X004,75-	20:01		
L10	XL10,21		0,75	BU
	H21S,X2	32:01		
	H20S,X2	32:01		
	H22S,X2	32:01		
	H001,X2	32:01		
	H002,X2	32:01		
	H003,X2	32:01		
L11	XL11,1		0.75	BU
	F091,2	20:01		
L11	XL11,2		0,75	BU
	G011,MC	06:01		

ECN 27947 'A'

Line	Position	Sheet	Area	Colour
L11	G012,MC	06:01		
	G013,MC	07:01		
	G014,MC	07:01		
	G015,MC	08:01		
	G016,MC	08:01		
L11	XL11,3		0,75	BU
	Q011,21	26:01		
	Q012,21	26:01		
L11	XL11,4		0,75	BU
	X004,22+	20:01		
L11	XL11,5		0,75	BU
	X004,30+	20:01		
L11	XL11,6		0,75	BU
	X004,62+	20:01		
L11	XL11,7		0,75	BU
	X004,75+	20:01		
L11	XL11,8		0,75	BU
	S001,13	24:01		
	S21H,13	24:01		
	S20H,13	24:01		
	S22H,13	24:01		
L12	XL12,1		0.75	BU
	F092,2	20:01		
L12	XL12,2		0.75	BU
	K097,2	20:01		
	,22	24:01		
L12	XL12,3		0,75	BU
	A006,01	32:01		
	,11	33:01		
L12	XL12,4		0,75	BU
	A009,01	38:01		
	,11	39:01		
L12	XL12,5		0,75	BU
	S099,11	23:01		
L13	XL13,1		0.75	BU
	K098,2	20:01		
L13	XL13,2		0,75	BU
	A002,02	24:01		
L13	XL13,3		0.75	BU
	A007,01	34:01		
	,11	35:01		
L13	XL13,4		0.75	BU
	A008,01	36:01		
	,11	37:01		
L13	XL13,5		0,75	BU
	S001,23	24:01		

TERMINAL SUMMARY "O" Date: 1-10-31

ECN 27947 'A'

Position	Sheet	Position	Sheet	Position	Sheet	Position	Sheet
X002,1	09:01	X004,12	28:01	X004,34	28:01	X004,44-	29:01
,2	09:01	,13	25:01	,34+	28:01	,45	
,3	09:01	,14	30:01	,34-	28:01	,45+	29:01
,4	09:01	,15	30:01	,35		,45-	29:01
,5	09:01	,16	37:01	,35+	28:01	,46	29:01
,6	09:01	,17	30:01	,35-	28:01	,46+	29:01
		,18	30:01	,36	28:01	,46-	29:01
X003,N	05:01	,19	37:01	,36+	28:01	,47	
,1	06:01	,20	30:01	,36-	28:01	,47+	29:01
,2	06:01	,21	30:01	,37		,47-	29:01
,3	07:01	,22	25:01	,37+	28:01	,48	29:01
,4	07:01	,22+	20:01	,37-	28:01	,48+	29:01
,5	08:01	,22-	20:01	,38	28:01	,48-	29:01
,6	08:01	,23	27:01	,38+	28:01	,49	
,7	20:01	,23+	27:01	,38-	28:01	,49+	29:01
,8	21:01	,24	38:01	,39		,49-	29:01
,9	21:01	,25	38:01	,39+	28:01	,50	29:01
,10		,26	23:01	,39-	28:01	,50+	29:01
		,27	23:01	,40	28:01	,50-	29:01
X004,1	31:01	,28	38:01	,40+	28:01	,51	25:01
,1+	31:01	,29	38:01	,40-	28:01	,51+	25:01
,1-	31:01	,30	25:01	,41		,52	25:01
,2	29:01	,30+	20:01	,41+	28:01	,52+	25:01
,3	27:01	,30-	20:01	,41-	28:01	,53	25:01
,4	38:01	,31		,42	28:01	,53+	25:01
,5	38:01	,31+	28:01	,42+	28:01	,54	25:01
,6	27:01	,32	28:01	,42-	28:01	,54+	25:01
,7	38:01	,32+	28:01	,43		,55	25:01
,8	38:01	,32-	28:01	,43+	29:01	,55+	25:01
,9	29:01	,33		,43-	29:01	,56	39:01
,10	29:01	,33+	28:01	,44	29:01	,56-	39:01
,11	28:01	,33-	28:01	,44+	29:01	,57	39:01

ECN 27947 'A'

Position	Sheet	Position	Sheet	Position	Sheet	Position	Sheet
X004,57-	39:01	M.X101,9	27:01	M.X102,1	27:01	M.X115,3	29:01
,58	23:01	,10	27:01	,2	27:01	,4	29:01
,59	23:01	,11	38:01	,3	38:01	,5	29:01
,60	33:01	,12	38:01	,4	38:01		
,61	33:01	,13	22:01	,5	23:01	M.X121,5A	30:01
,62	33:01	,14	22:01	,6	23:01	,1	
,62+	20:01	,15	29:01	,7	38:01	,1A	30:01
,62-	20:01	,16	29:01	,8	38:01	,1B	30:01
,63		,17	29:01	,9	25:01	,2	30:01
,64		,18	29:01	,10	25:01	,2A	30:01
,65		,19	29:01			,2B	30:01
,66		,20	29:01	M.X111,1	28:01	,3	
,67		,21	28:01	,2	28:01	,3A	30:01
,68		,22	28:01	,3	28:01	,3B	30:01
,69		,23	28:01	,4	28:01	,4	30:01
,70		,24	28:01	,5	28:01	,4A	30:01
,71		,25	25:01	,6	28:01	,4B	30:01
,72		,26	30:01	,7	28:01	,5	37:01
,73		,27	30:01	,8	28:01	,5B	37:01
,74		,28	37:01	,9	28:01		
,75		,29	30:01	,10	28:01	M.X122,5A	30:01
,75+	20:01	,30	37:01	,11	25:01	,1	
,75-	20:01	,31	30:01	,12	25:01	,1A	30:01
		,32	30:01			,1B	30:01
M.X101,1	31:01	,33	37:01	M.X114,1	29:01	,2	30:01
,2	31:01	,34	30:01	,2	29:01	,2A	30:01
,3	31:01	,35	37:01	,3	29:01	,2B	30:01
,4	29:01	,36	30:01	,4	29:01	,3	
,5	27:01	,37	30:01	,5	29:01	,3A	30:01
,6	27:01	,38	30:01			,3B	30:01
,7	38:01	,39	30:01	M.X115,1	29:01	,4	30:01
,8	38:01	,40	25:01	,2	29:01	,4A	30:01

ECN 27947 'A'

Position	Sheet	Position	Sheet	Position	Sheet	Position	Sheet
M.X122,4B	30:01						
,5	37:01						
,5B	37:01						
M.X131,1	30:01						
,2	30:01						
,3	30:01						
,4	30:01						
,5	30:01						
,6	30:01						
,7	30:01						
,8	30:01						
,9	30:01						
,10	30:01						
,11	25:01						
,12	25:01						
M.X151,1	31:01						
,2	31:01						
,3	31:01						
,6	29:01						
,7	29:01						
,8	29:01						
,9	29:01						
,10	29:01						

This drawing must not without the consent of Tetra Pak:
be copied, transmitted or disclosed to any third party.

ALTERATION MESSAGES

ECM NO.	TEXT		
85617	DOCUMENTATION RELEASED	B-679484-0100	TETRA EASY RIDE PLUS

TETRA EASY RIDE PLUS

Mole	AA					Tetra Pak	Designer PNO	Date 010101	Approved	Date	Doc. class –
ECM No.	85617						Machine SEE ABOVE	Denomination ALTERATION MESSAGES			
Sign./Date	AMM/010101					Company Tetra Brik PS AB		Drawing No 45068-0099			Page –
Appr./Date					Drawing remarks						

ECN 85617 'O'
20011031 MANI

Position	Sheet	Position	Sheet	Position	Sheet	Position	Sheet	Position	Sheet
A002	24:01	M.B108.1	28:01	F001	20:01	K080	38:01	M.Q105	25:01
A002	25:01	M.B108.2	28:01	F002	21:01	K081	38:01	M.Q106	08:01
A003	26:01	M.B109.1	29:01	F003	21:01	K082	38:01	M.Q106	25:01
A003	27:01	M.B109.2	29:01	F004	21:01	K083	38:01	M.Q111	09:01
A004	28:01	M.B110.1	29:01	F011	06:01	K084	38:01	M.Q111	25:01
A004	29:01	M.B110.2	29:01	F012	06:01	K097	23:01	M.Q112	09:01
A005	30:01	M.B111.1	29:01	F013	07:01	K098	23:01	M.Q112	25:01
A005	31:01	M.B111.2	29:01	F014	07:01				
A006	32:01	M.B112.1	29:01	F015	08:01	M001	21:01	S001	24:01
A006	33:01	M.B112.2	29:01	F016	08:01	M.M101	06:01	S099	23:01
A007	34:01	M.B113.1	29:01	F091	20:01	M.M102	06:01	M.S101	23:01
A007	35:01	M.B113.2	29:01	F092	20:01	M.M103	07:01	M.S102	23:01
A008	36:01	M.B114.1	29:01			M.M104	07:01	S20H	24:01
A008	37:01	M.B114.2	29:01	G001	20:01	M.M105	08:01	S21H	24:01
A009	38:01	M.B115.1	29:01	G011	06:01	M.M106	08:01	S22H	24:01
A009	39:01	M.B115.2	29:01	G012	06:01	M.M111	09:01		
A060	21:01	M.B121.1	30:01	G013	07:01	M.M112	09:01	X007	21:01
		M.B121.2	30:01	G014	07:01				
M.B101.1	28:01	M.B122.1	30:01	G015	08:01	Q000	05:01	M.Y101	37:01
M.B101.2	28:01	M.B122.2	30:01	G016	08:01	Q011	09:01	M.Y102	37:01
M.B102.1	28:01	M.B123.1	30:01	G060	21:01	Q011	26:01	M.Y951	39:01
M.B102.2	28:01	M.B123.2	30:01			Q012	09:01	M.Y952	39:01
M.B103.1	28:01	M.B124.1	30:01	H001	32:01	Q012	26:01		
M.B103.2	28:01	M.B124.2	30:01	H002	32:01	M.Q101	06:01	Z000	05:01
M.B104.1	28:01	M.B131.1	30:01	H003	32:01	M.Q101	25:01	Z011	06:01
M.B104.2	28:01	M.B131.2	30:01	H20S	32:01	M.Q102	06:01	Z012	06:01
M.B105.1	28:01	M.B132.1	30:01	H21S	32:01	M.Q102	25:01	Z013	07:01
M.B105.2	28:01	M.B132.2	30:01	H22S	32:01	M.Q103	07:01	Z014	07:01
M.B106.1	28:01	M.B151	31:01			M.Q103	25:01	Z015	08:01
M.B106.2	28:01			K001	37:01	M.Q104	07:01	Z016	08:01
M.B107.1	28:01	D001	21:01	K011	37:01	M.Q104	25:01	Z031	06:01
M.B107.2	28:01			K012	37:01	M.Q105	08:01	Z032	06:01

POSITION SUMMARY "W" Date: 1-12-10

ECN 85617 'O'
20011031 MANI

Position	Sheet	Position	Sheet	Position	Sheet	Position	Sheet	Position	Sheet
Z033	06:01								
Z034	06:01								
Z035	07:01								
Z036	07:01								
Z037	07:01								
Z038	07:01								
Z039	08:01								
Z040	08:01								
Z041	08:01								
Z042	08:01								

This drawing must not without the consent of Tetra Pak:
be copied, transmitted or disclosed to any third party.

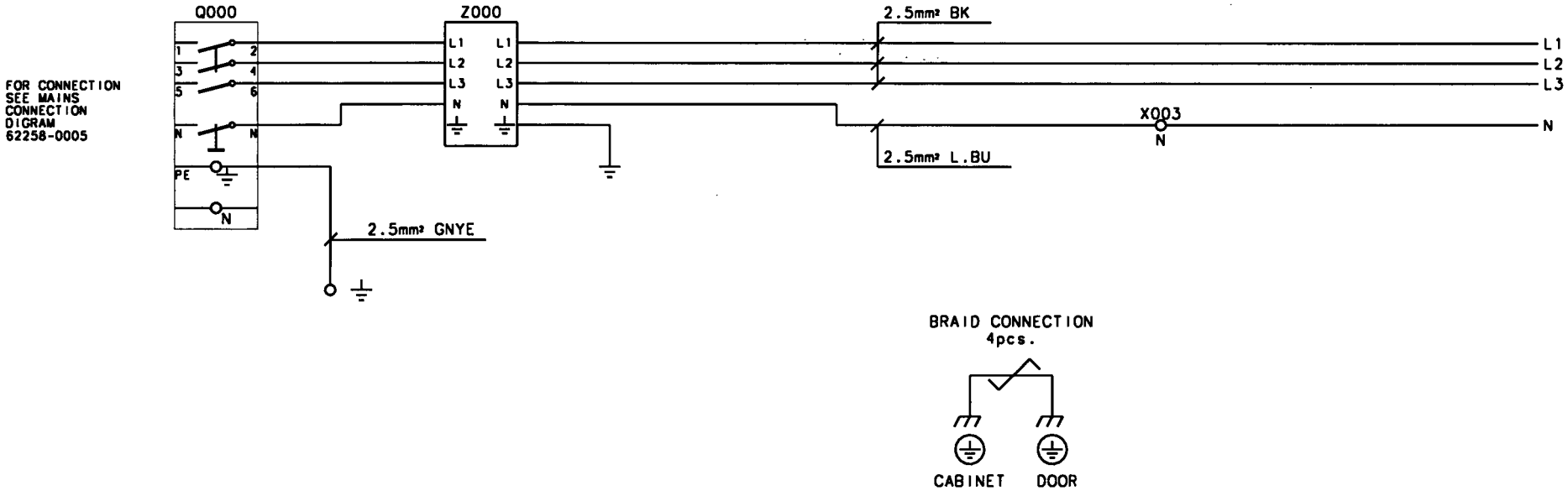

SYSTEM VOLTAGE	RECOMMENDED MAIN FUSE
3N ~ 50HZ 400/230V	10A

FOR TYPE OF WIRE, WIRING INSTRUCTIONS ETC.
SEE SPECIFIKATION FOR SUBSUPPLIERS TPUS 3502.22

WHERE NOTHING ELSE IS SAID
OR LINE SUMMARY IS VALID: 0.75mm2 BU
STAR OR BLUE MARKING IS USED
FOR SHOWING CONTINUOUS WIRE

TETRA EASY RIDE PLUS

Mole	AA					Tetra Pak	Designer PNO	Date 010101	Approved	Date	Doc. class –
ECN No.	85617						Machine SEE ABOVE	Denomination CIRCUIT DIAGRAM			
Sign./Date	AMM/010101					Company Tetra Brik PS AB		Drawing No 45187-0005			Page –
Appr./Date						Drawing remarks					

This drawing must not without the consent of Tetra Pak:
be copied, transmitted or disclosed to any third party.

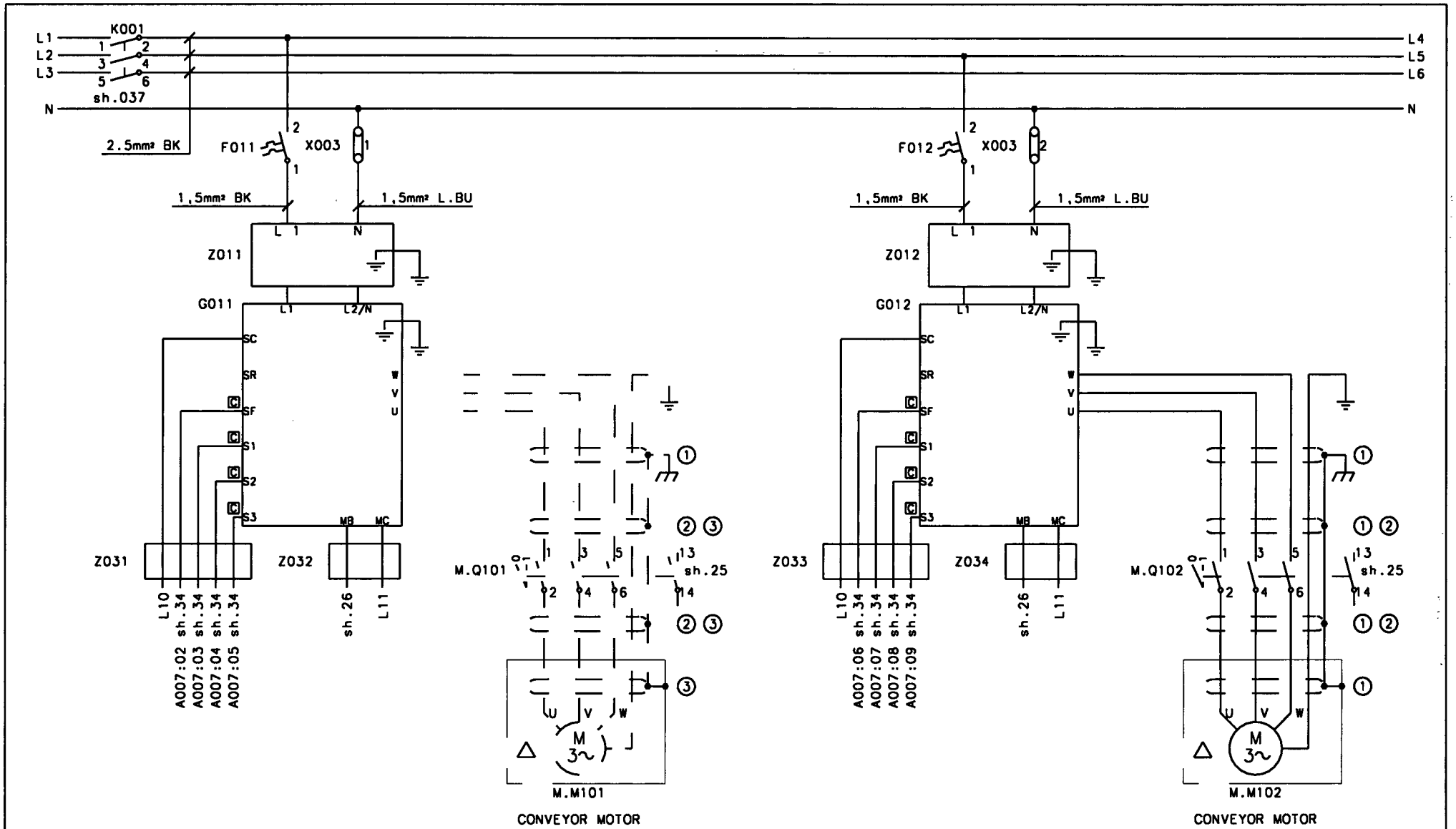

TETRA EASY RIDE PLUS

Note	AA				① SCREEN CONNECTED TO EMC-CLAMP	Tetra Pak	Designer PNO	Date 010101	Approved	Date	Doc. class -
ECN No.	85617				② CABELGLAND CONNECTED TO EMC-PLATE		Machine SEE ABOVE	Denomination CIRCUIT DIAGRAM		
Sign./Date	AMM/010101				③ SCREEN CONNECTED TO EMC-CABLEGLAND	Company Tetra Brik PS AB	Drawing No 45187-0006			Page -
Appr./Date					Drawing remarks					

This drawing must not without the consent of Tetra Pak:
be copied, transmitted or disclosed to any third party.

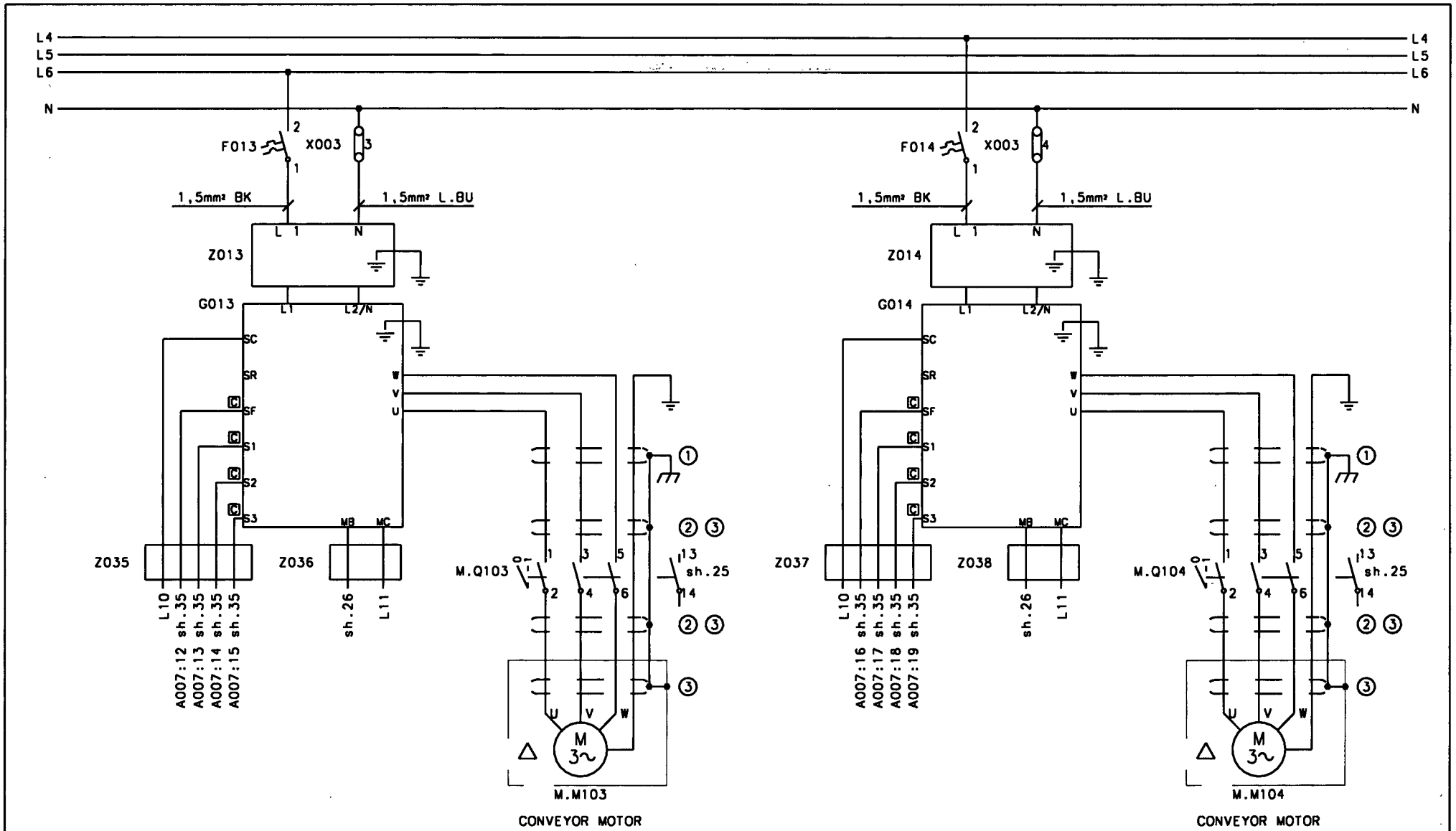

TETRA EASY RIDE PLUS

Note	AA					① SCREEN CONNECTED TO EMC-CLAMP	Tetra Pak	Designer PNO	Date 010101	Approved	Date	Doc. class -
ECN No.	85617					② CABELGLAND CONNECTED TO EMC-PLATE		Machine SEE ABOVE	Denomination CIRCUIT DIAGRAM		
Sign./Date	AMM/010101					③ SCREEN CONNECTED TO EMC-CABLEGLAND	Company Tetra Brik PS AB	Drawing No 45187-0007			Page -
Appr./Date						Drawing remarks					

This drawing must not without the consent of Tetra Pak:
be copied, transmitted or disclosed to any third party.

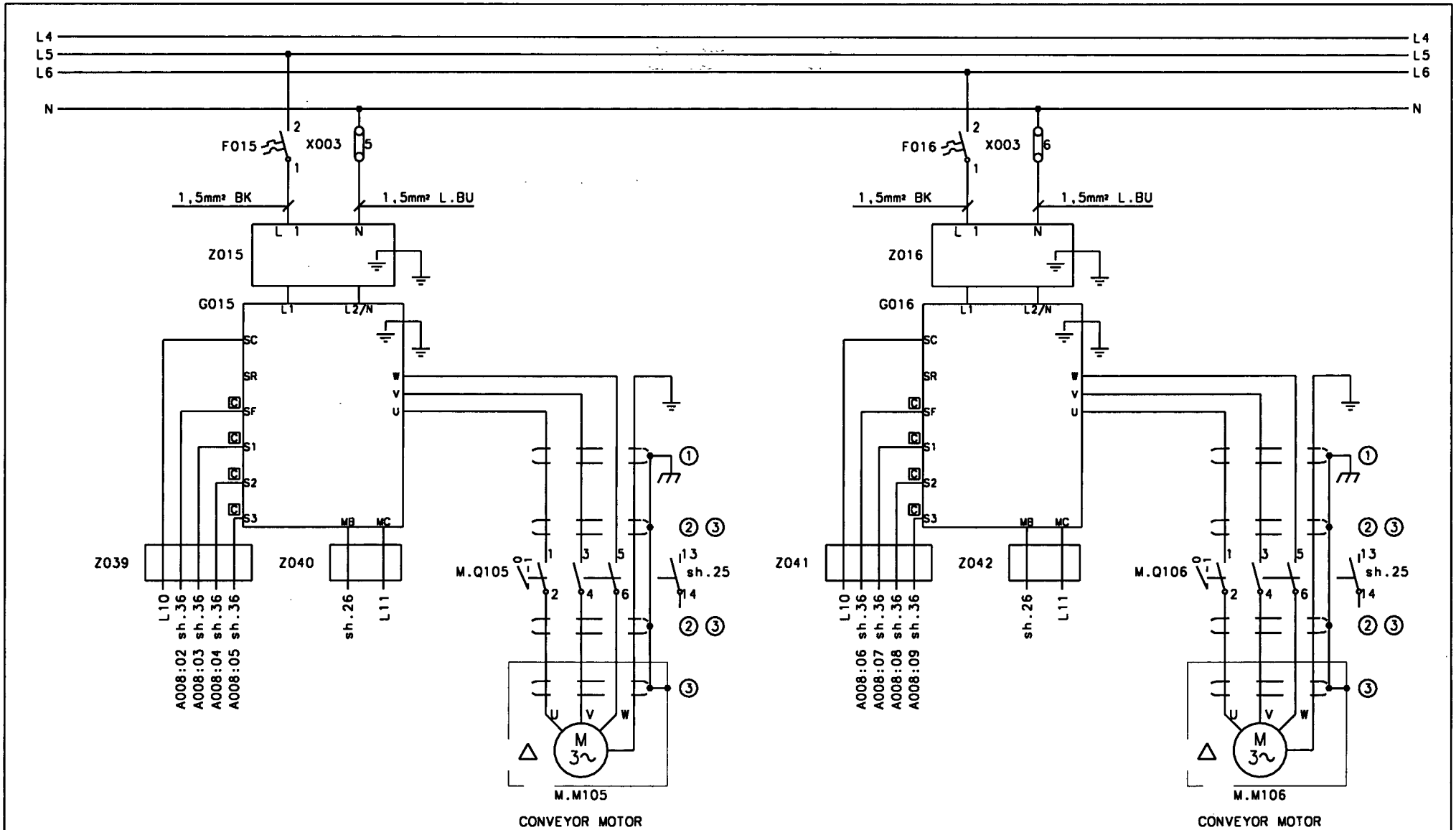

TETRA EASY RIDE PLUS

Note	AA				① SCREEN CONNECTED TO EMC-CLAMP	Tetra Pak	Designer PNO	Date 010101	Approved	Date	Doc. class -
ECN No.	85617				② CABELGLAND CONNECTED TO EMC-PLATE		Machine SEE ABOVE	Denomination CIRCUIT DIAGRAM			
Sign./Date	AMM/010101				③ SCREEN CONNECTED TO EMC-CABLEGLAND		Company Tetra Brik PS AB	Drawing No 45187-0008			Page -
Appr./Date					Drawing remarks						

This drawing must not without the consent of Tetra Pak:
be copied, transmitted or disclosed to any third party.

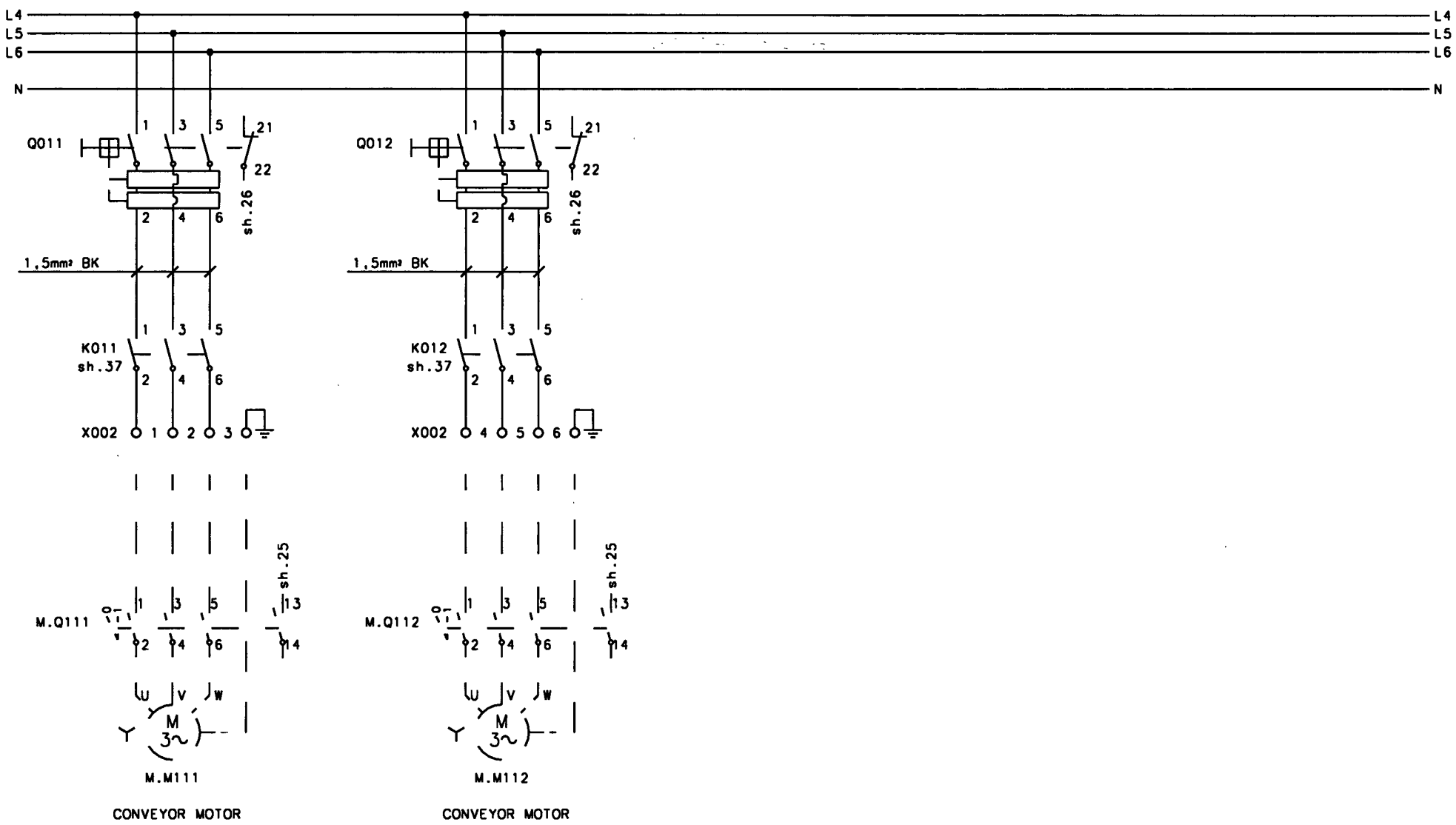

TETRA EASY RIDE PLUS

Note	AA					Tetra Pak	Designer PNO	Date 010101	Approved	Date	Doc. class –
ECN No.	85617						Machine SEE ABOVE	Denomination CIRCUIT DIAGRAM			
Sign./Date	AMM/010101					Company Tetra Brik PS AB		Drawing No 45187-0009			Page –
Appr./Date						Drawing remarks					

This drawing must not without the consent of Tetra Pak:
be copied, transmitted or disclosed to any third party.

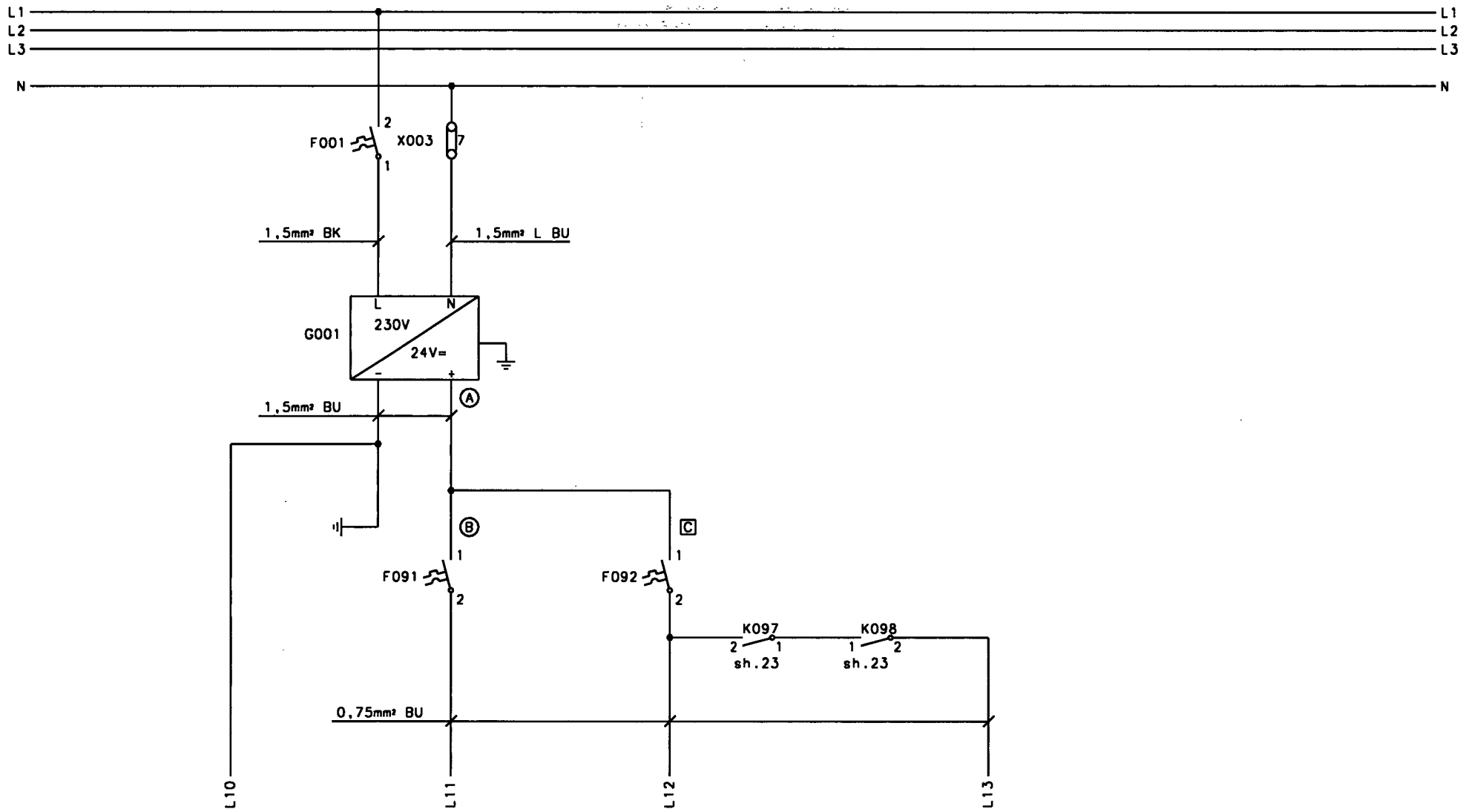

TETRA EASY RIDE PLUS

Note	AA					Tetra Pak	Designer PNO	Date 010101	Approved	Date	Doc. class –
ECN No.	85617						Machine SEE ABOVE	Denomination CIRCUIT DIAGRAM		
Sign./Date	AMM/010101									
Appr./Date					Drawing remarks	Company Tetra Brik PS AB		Drawing No 45187-0020		Page –

This drawing must not without the consent of Tetra Pak:
be copied, transmitted or disclosed to any third party.

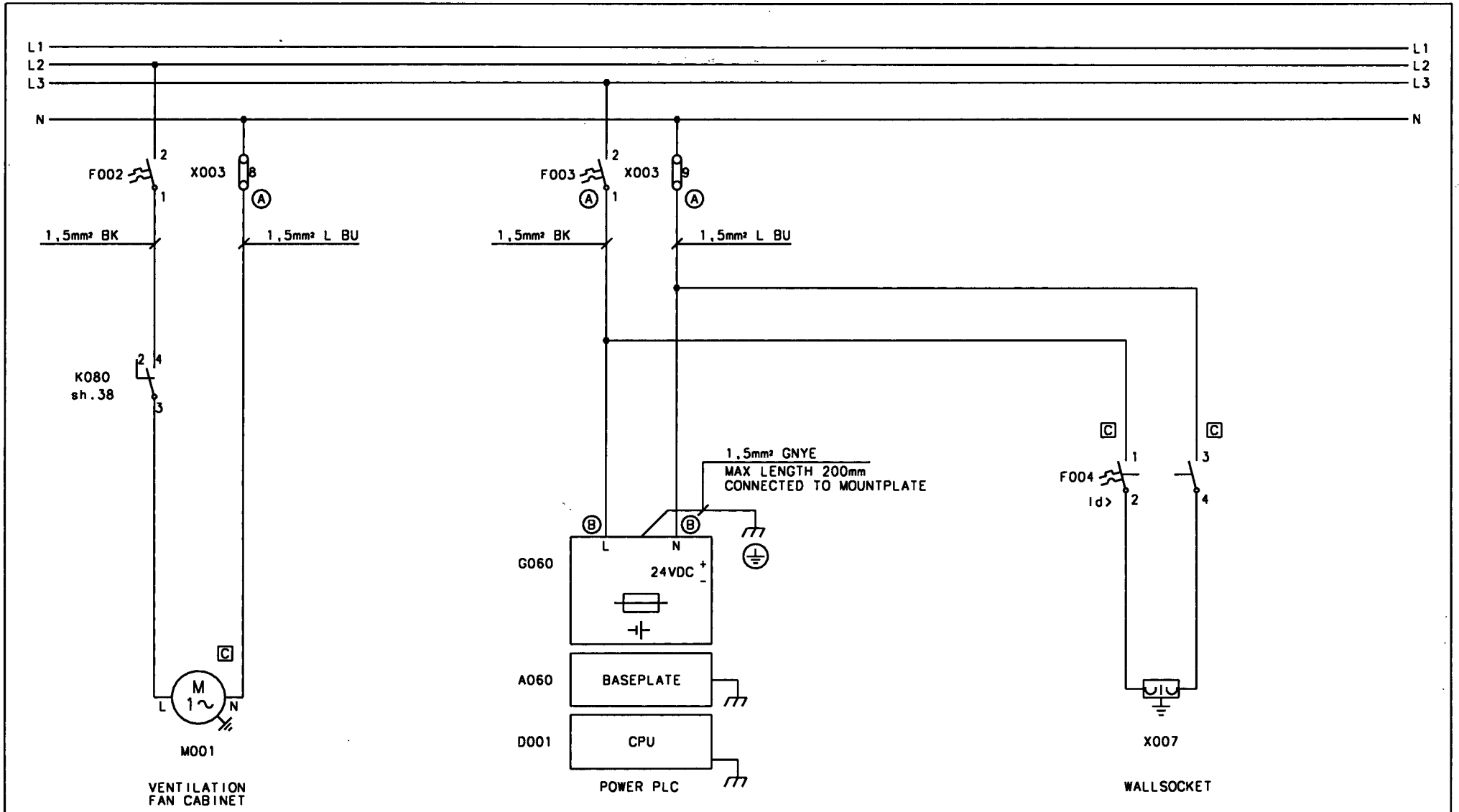

TETRA EASY RIDE PLUS

Note	AA					Tetra Pak	Designer PNO	Date 010101	Approved	Date	Doc. class –
ECN No.	85617						Machine SEE ABOVE	Denomination CIRCUIT DIAGRAM			
Sign./Date	AMM/010101										
Appr./Date					Drawing remarks	Company Tetra Brik PS AB		Drawing No 45187-0021			Page –

This drawing must not without the consent of Tetra Pak:
be copied, transmitted or disclosed to any third party.

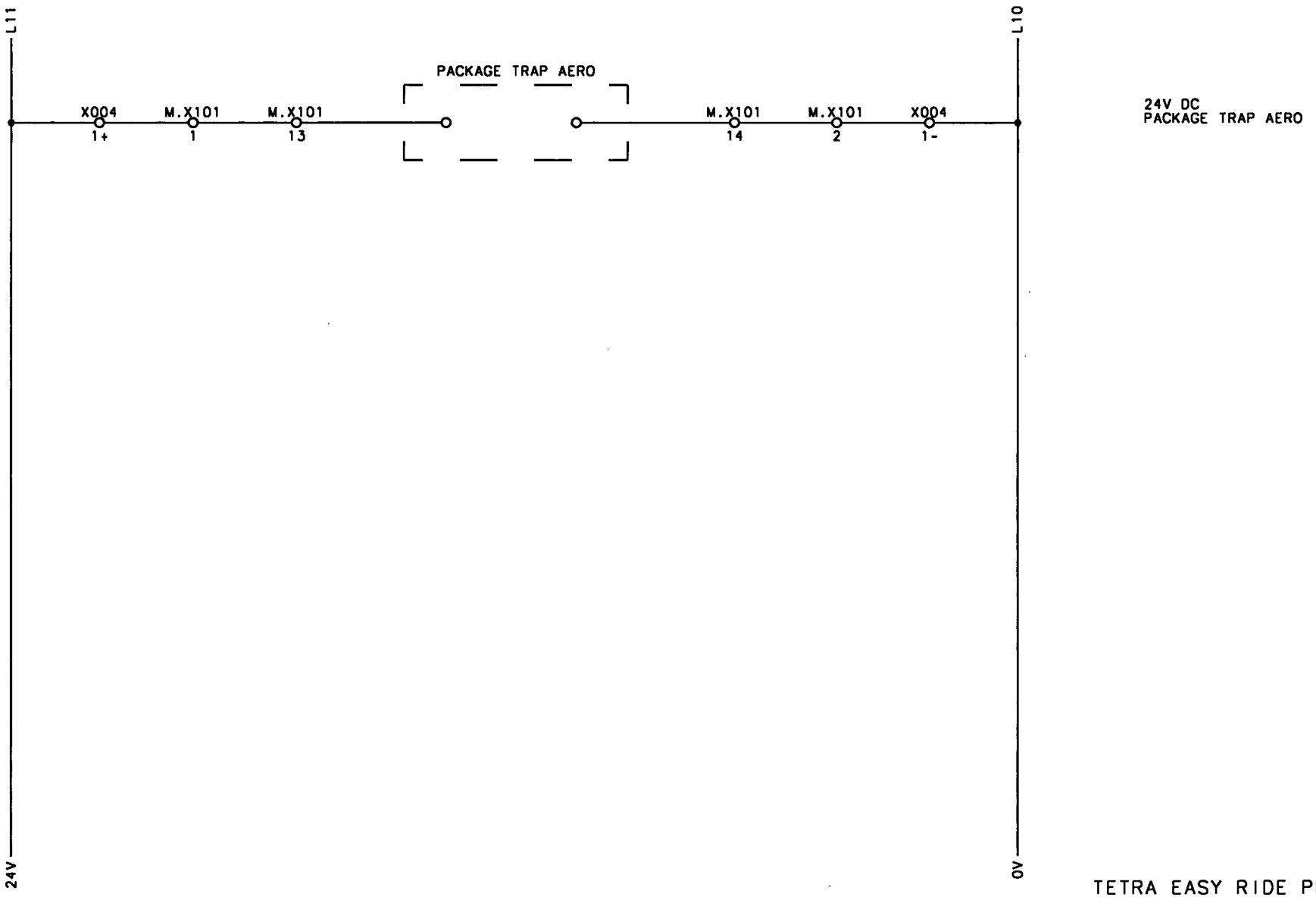

TETRA EASY RIDE PLUS

Note	AA					Tetra Pak	Designer PNO	Date 010101	Approved	Date	Doc. class –
ECN No.	85617						Machine SEE ABOVE	Denomination CIRCUIT DIAGRAM			
Sign./Date	AMM/010101										
Appr./Date					Drawing remarks	Company Tetra Brik PS AB		Drawing No 45187-0022			Page –

This drawing must not without the consent of Tetra Pak: be copied, transmitted or disclosed to any third party.

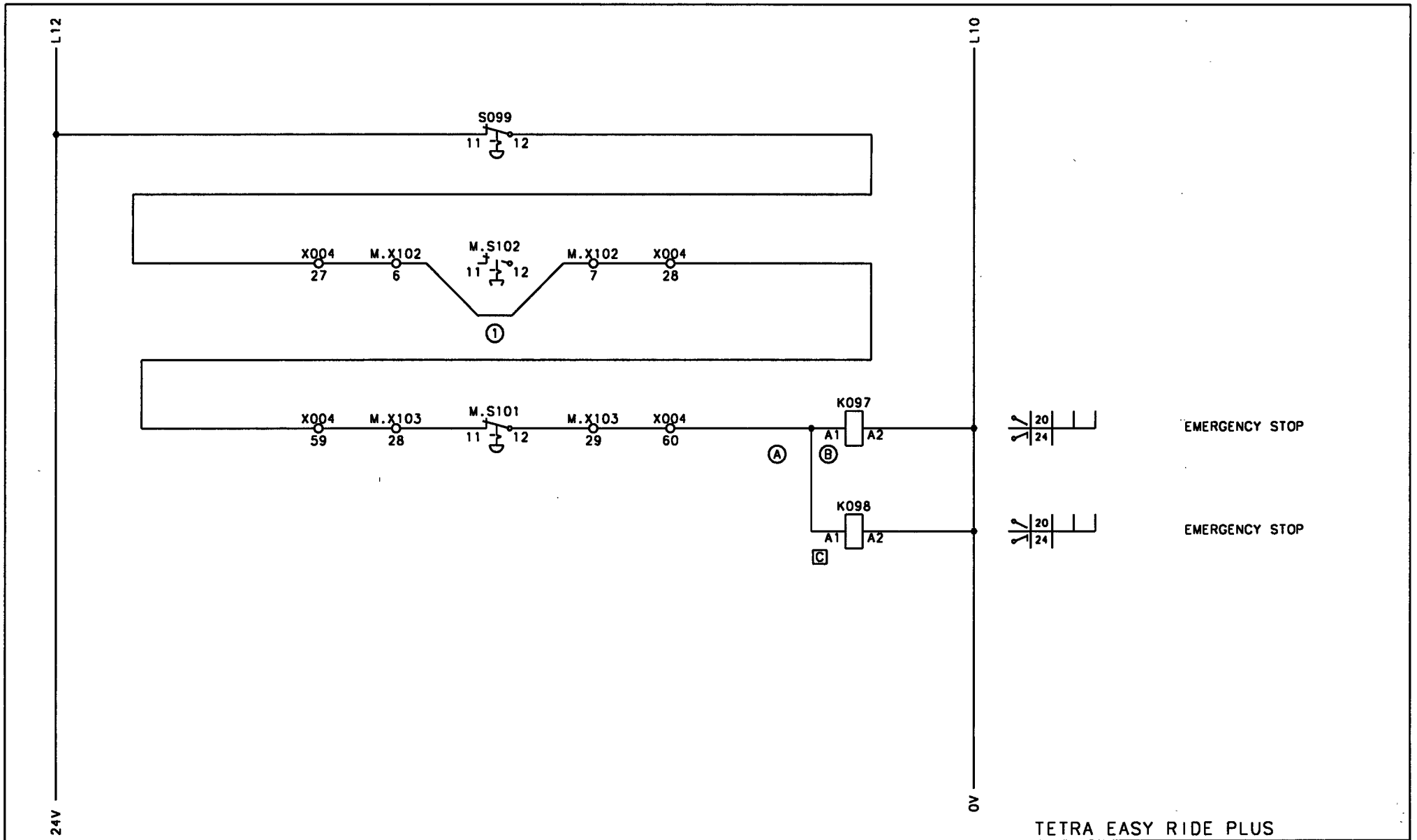

TETRA EASY RIDE PLUS

Note	AA	AB			1 TO BE DISCONNECTED IF EXTERNAL	Tetra Pak	Designer PNO	Date 011115	Approved	Date	Doc. class –
ECN No.	85617	102364			EMERGENCY STOP IS USED		Machine SEE ABOVE	Denomination CIRCUIT DIAGRAM			
Sign./Date	AMM/010101	AMM/011115				Company Tetra Brik PS AB		Drawing No 45187-0023		Page –	
Appr./Date					Drawing remarks						

This drawing must not without the consent of Tetra Pak:
be copied, transmitted or disclosed to any third party.

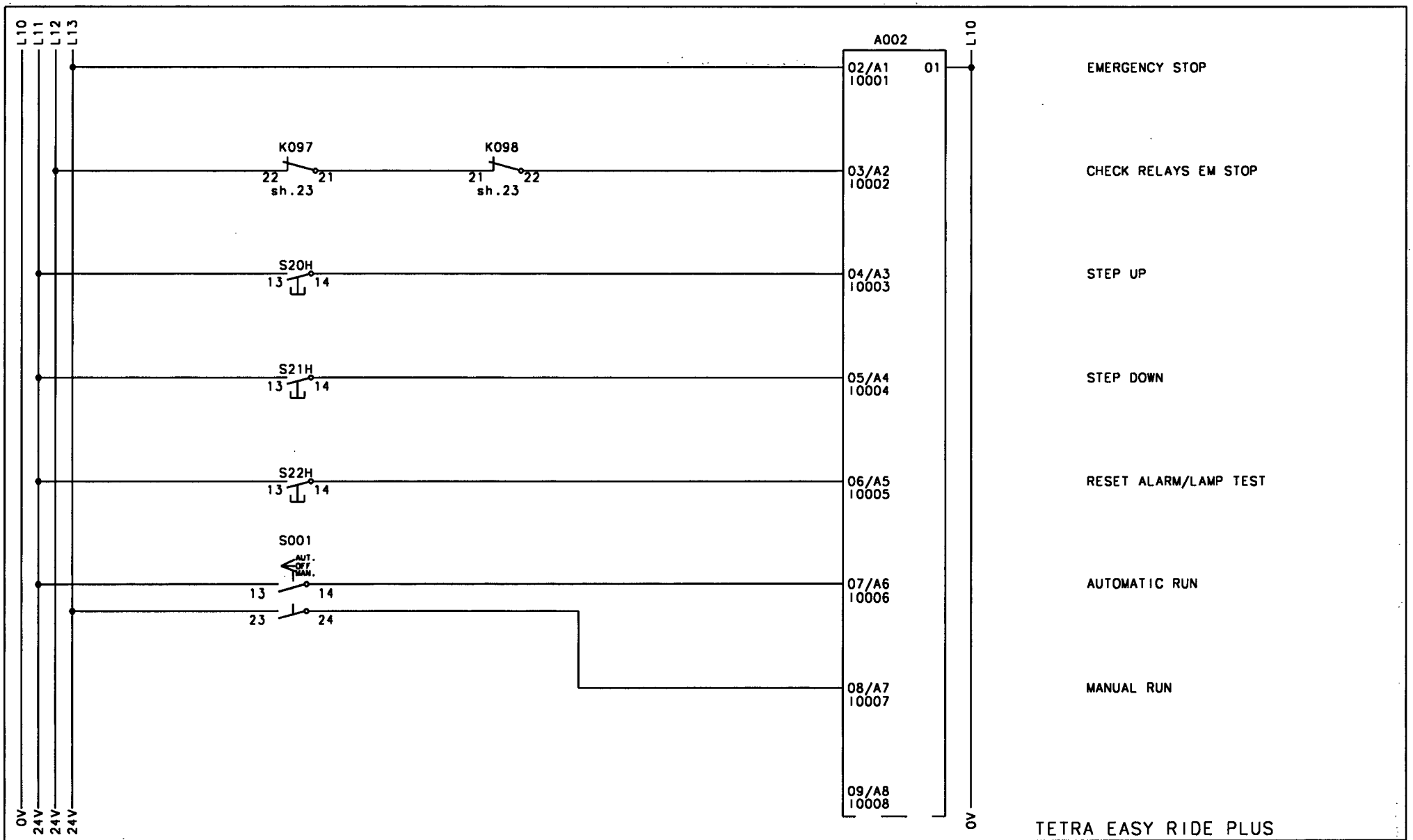

TETRA EASY RIDE PLUS

Note	AA					Tetra Pak	Designer PNO	Date 010101	Approved	Date	Doc. class –
ECN No.	85617						Machine SEE ABOVE	Denomination CIRCUIT DIAGRAM			
Sign./Date	AMM/010101					Company Tetra Brik PS AB		Drawing No 45187-0024			Page –
Appr./Date					Drawing remarks						

This drawing must not without the consent of Tetra Pak: be copied, transmitted or disclosed to any third party.

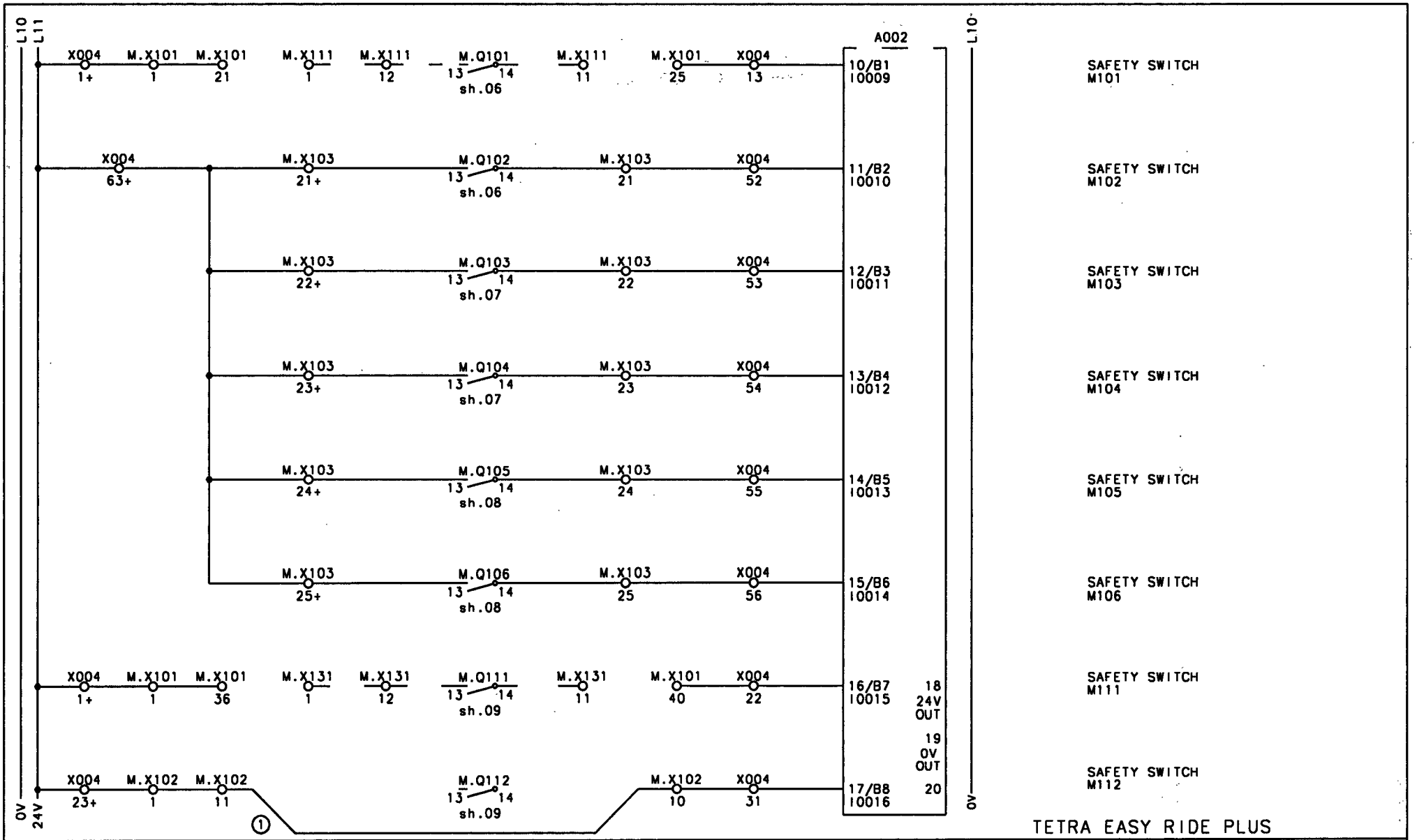

TETRA EASY RIDE PLUS

Note	AA	AB			1 TO BE REMOVED IF SAFETY SWITCH IS TO BE CONNECTED	Tetra Pak	Designer PNO	Date 011115	Approved Date	Doc. class –
ECN No.	85617	102364					Machine SEE ABOVE	Denomination CIRCUIT DIAGRAM	
Sign./Date	AMM/010101	AMM/011115				Company Tetra Brik PS AB	Drawing No 45187-0025		Page –
Appr./Date					Drawing remarks				

This drawing must not without the consent of Tetra Pak:
be copied, transmitted or disclosed to any third party.

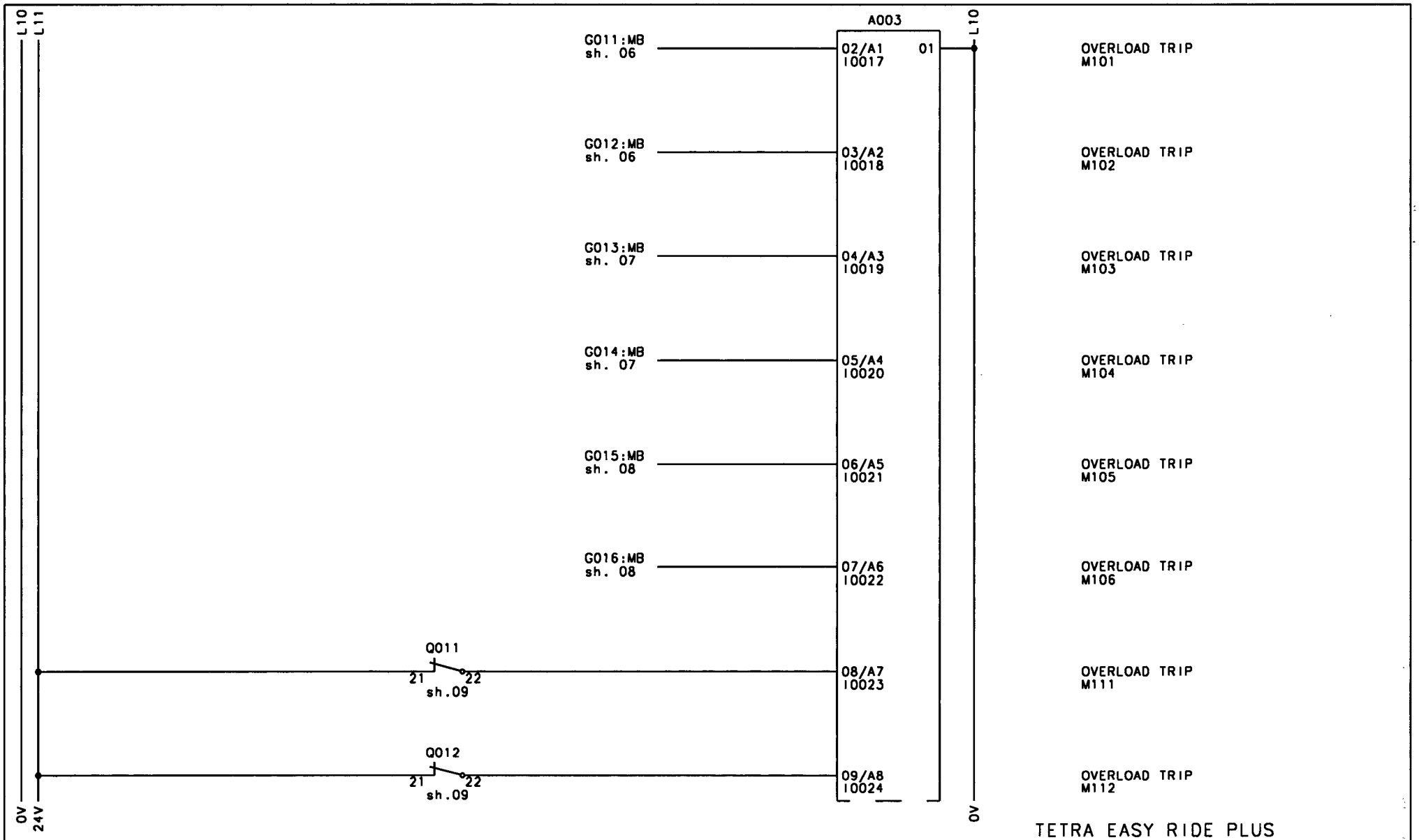

TETRA EASY RIDE PLUS

Note	AA					Tetra Pak	Designer PNO	Date 010101	Approved	Date	Doc. class -
ECN No.	85617						Machine SEE ABOVE	Denomination CIRCUIT DIAGRAM			
Sign./Date	AMM/010101										
Appr./Date					Drawing remarks	Company Tetra Brik PS AB		Drawing No 45187-0026			Page -

This drawing must not without the consent of Tetra Pak:
be copied, transmitted or disclosed to any third party.

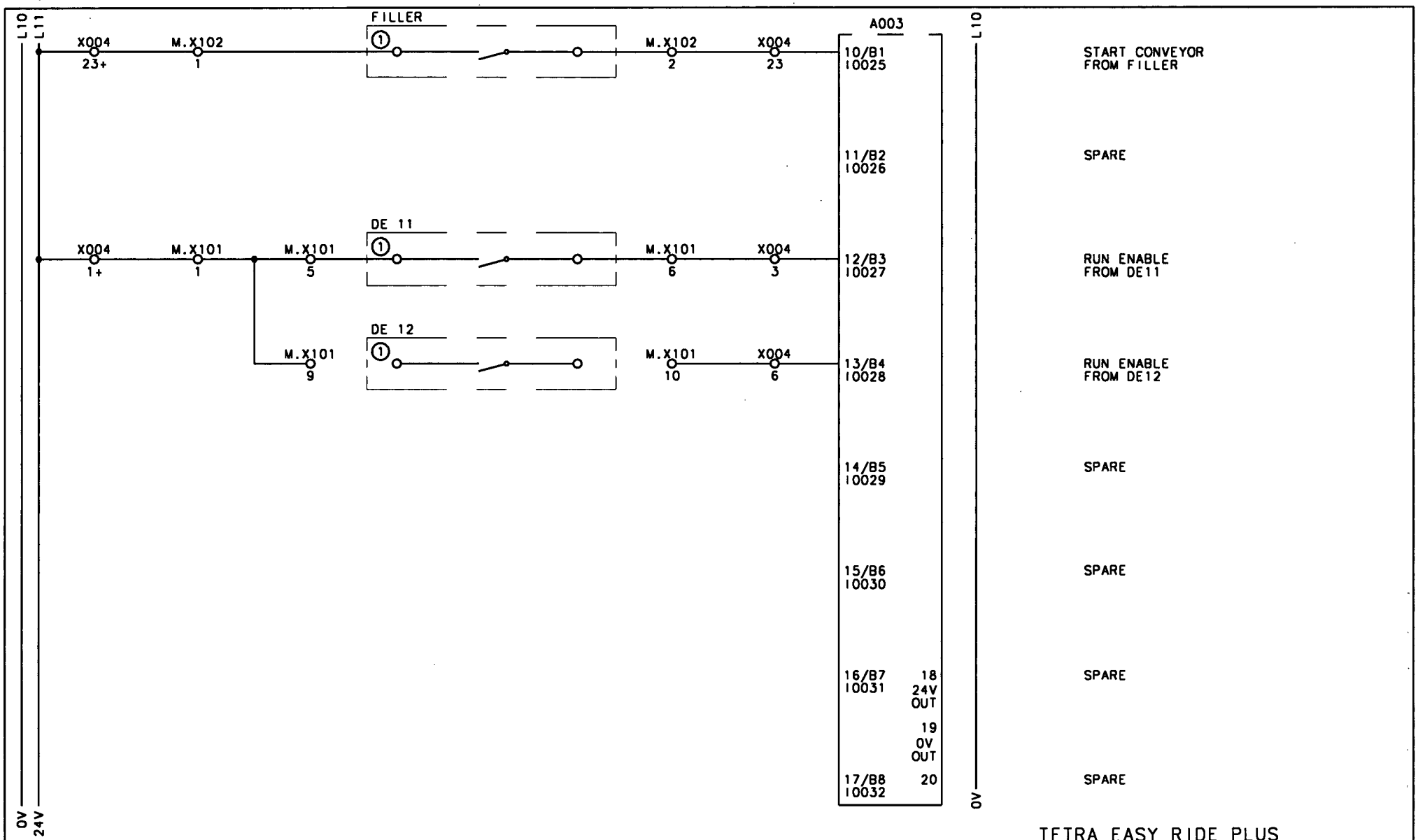

TETRA EASY RIDE PLUS

Note	AA				1 FOR CONNECTION SEE IN MACHINE MANUAL	Tetra Pak	Designer PNO	Date 010101	Approved	Date	Doc. class -
ECN No.	85617						Machine SEE ABOVE	Denomination CIRCUIT DIAGRAM		
Sign./Date	AMM/010101									
Appr./Date					Drawing remarks	Company Tetra Brik PS AB		Drawing No 45187-0027		Page -

This drawing must not without the consent of Tetra Pak: be copied, transmitted or disclosed to any third party.

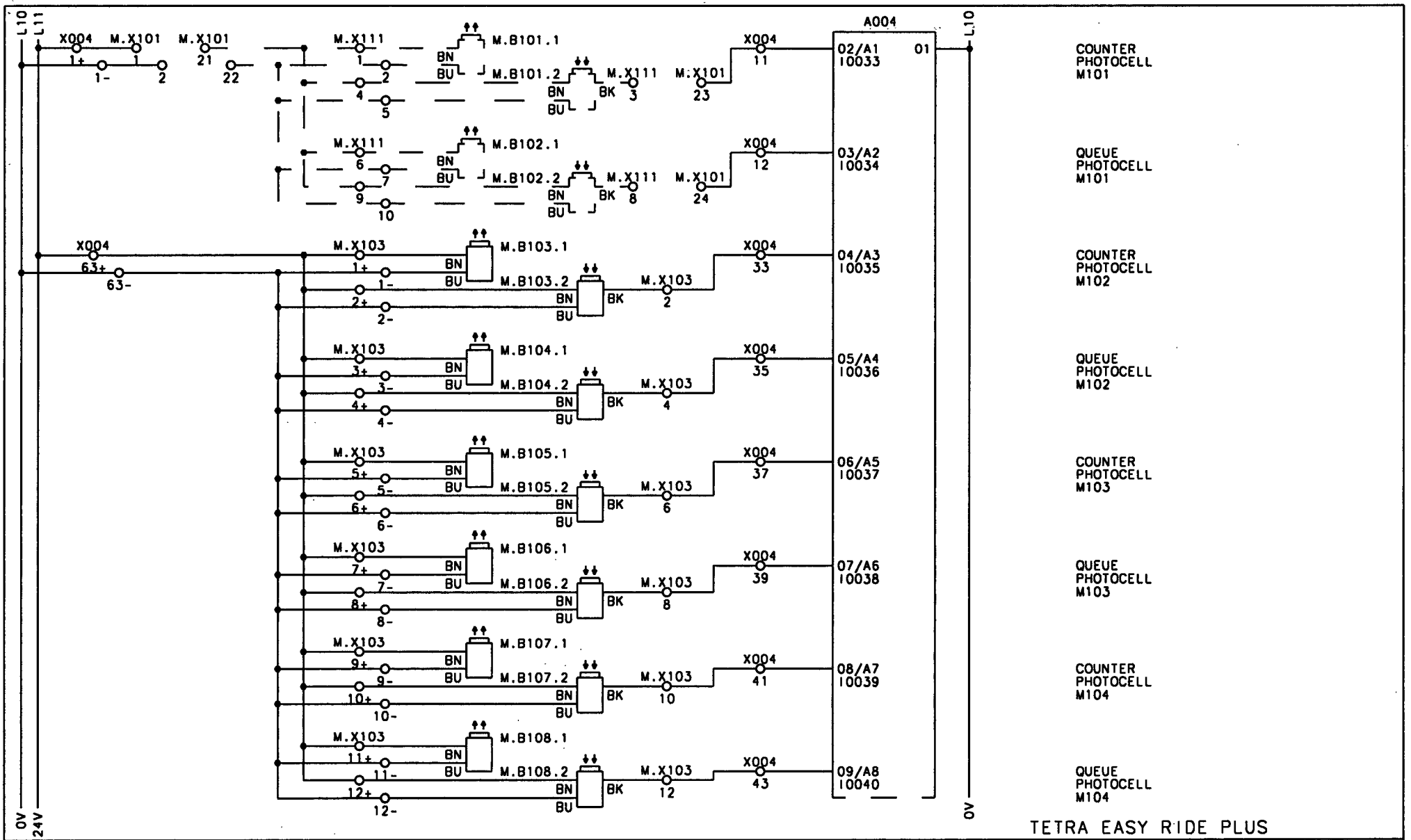

TETRA EASY RIDE PLUS

Note	AA	AB				Tetra Pak	Designer PNO	Date 011115	Approved	Date	Doc. class -
ECN No.	85617	102364					Machine SEE ABOVE	Denomination CIRCUIT DIAGRAM		
Sign./Date	AMM/010101	AMM/011115				Company Tetra Brik PS AB		Drawing No 45187-0028		Page -
Appr./Date					Drawing remarks					

This drawing must not without the consent of Tetra Pak: be copied, transmitted or disclosed to any third party.

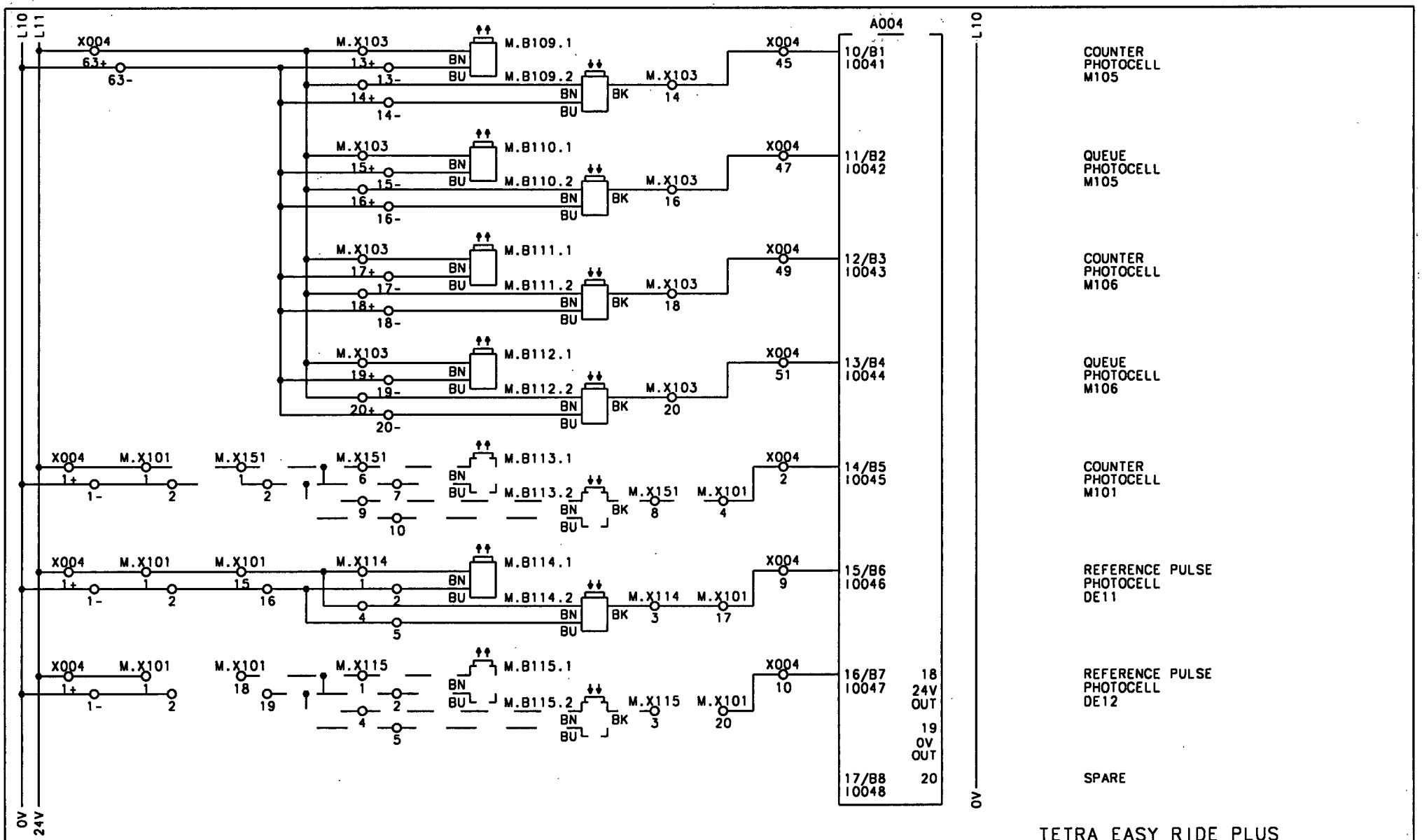

TETRA EASY RIDE PLUS

Note	AA	AB				Tetra Pak	Designer PNO	Date 011115	Approved	Date	Doc. class -
ECN No.	85617	102364					Machine SEE ABOVE	Denomination CIRCUIT DIAGRAM			
Sign./Date	AMM/010101	AMM/011115									
Appr./Date					Drawing remarks	Company Tetra BRIK PS AB		Drawing No 45187-0029			Page -

This drawing must not without the consent of Tetra Pak: be copied, transmitted or disclosed to any third party.

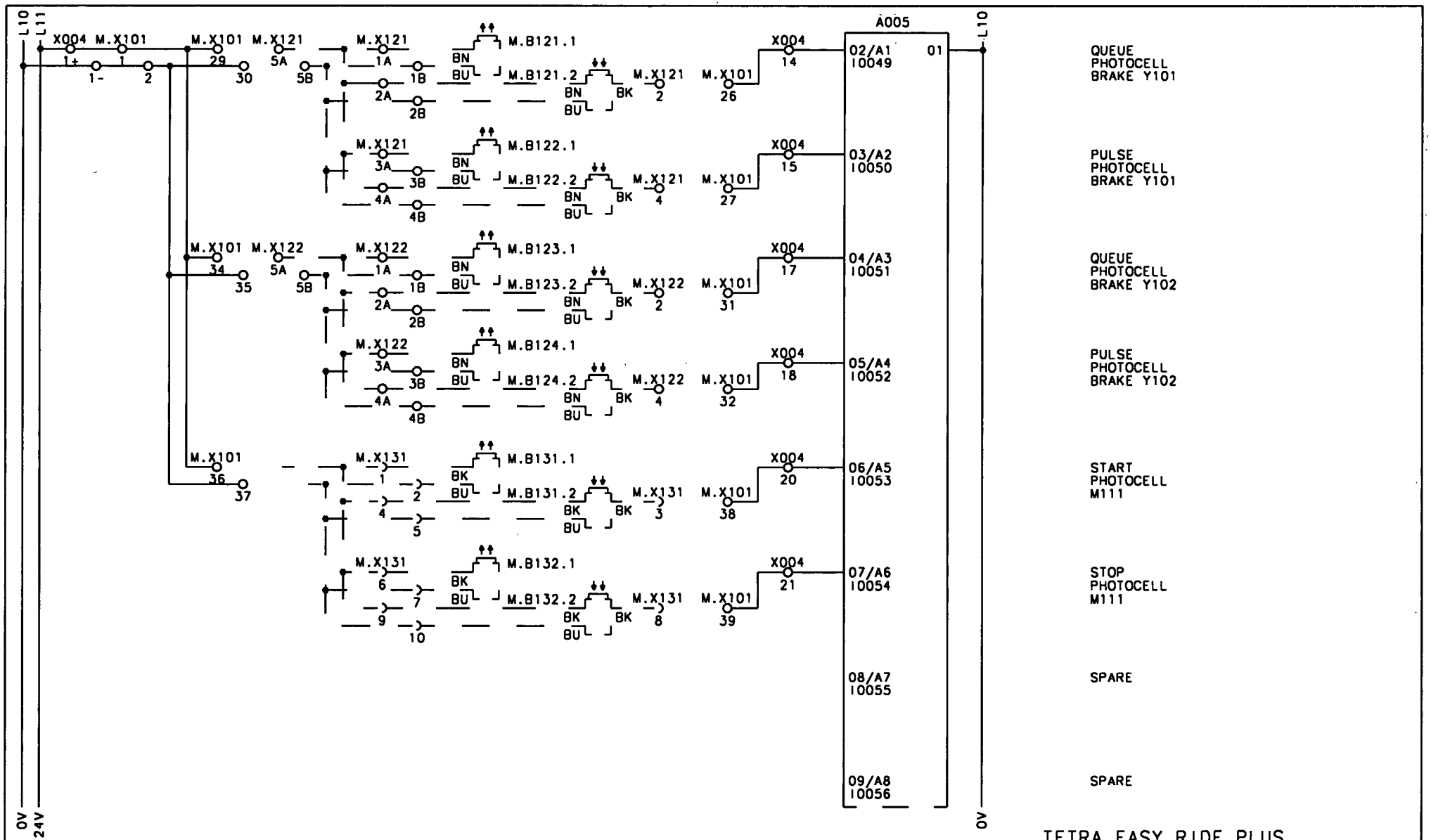

TETRA EASY RIDE PLUS

Note	AA					Tetra Pak	Designer PNO	Date 010101	Approved	Date	Doc. class -
ECN No.	85617						Machine SEE ABOVE	Denomination CIRCUIT DIAGRAM		
Sign./Date	AMM/010101					Company Tetra Brik PS AB		Drawing No 45187-0030		Page -
Appr./Date					Drawing remarks					

This drawing must not without the consent of Tetra Pak:
be copied, transmitted or disclosed to any third party.

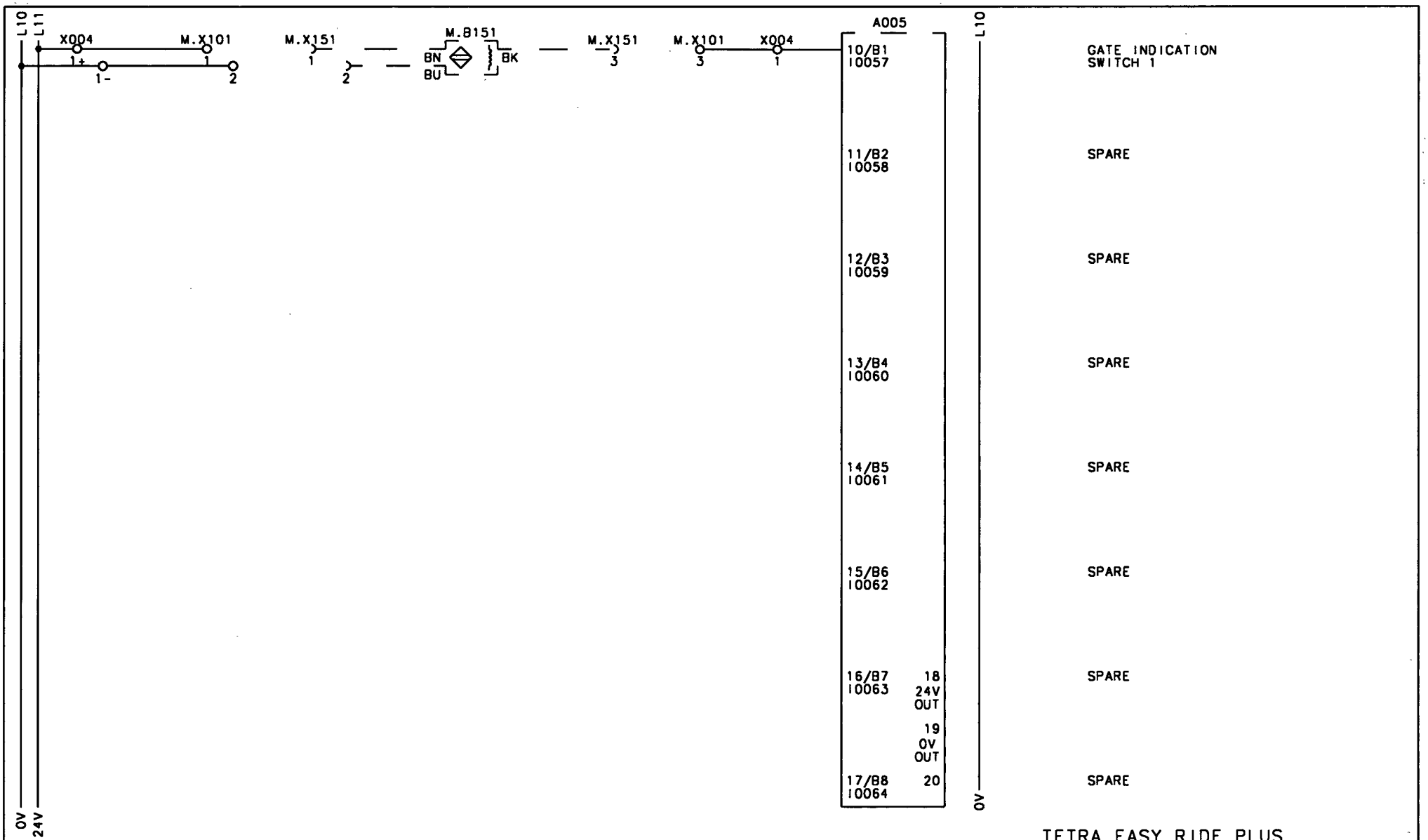

TETRA EASY RIDE PLUS

Note	AA					Tetra Pak	Designer PNO	Date 010101	Approved	Date	Doc. class –
ECN No.	85617						Machine SEE ABOVE	Denomination CIRCUIT DIAGRAM		
Sign./Date	AMM/010101					Company Tetra Brik PS AB		Drawing No 45187-0031		Page –
Appr./Date					Drawing remarks					

This drawing must not without the consent of Tetra Pak: be copied, transmitted or disclosed to any third party.

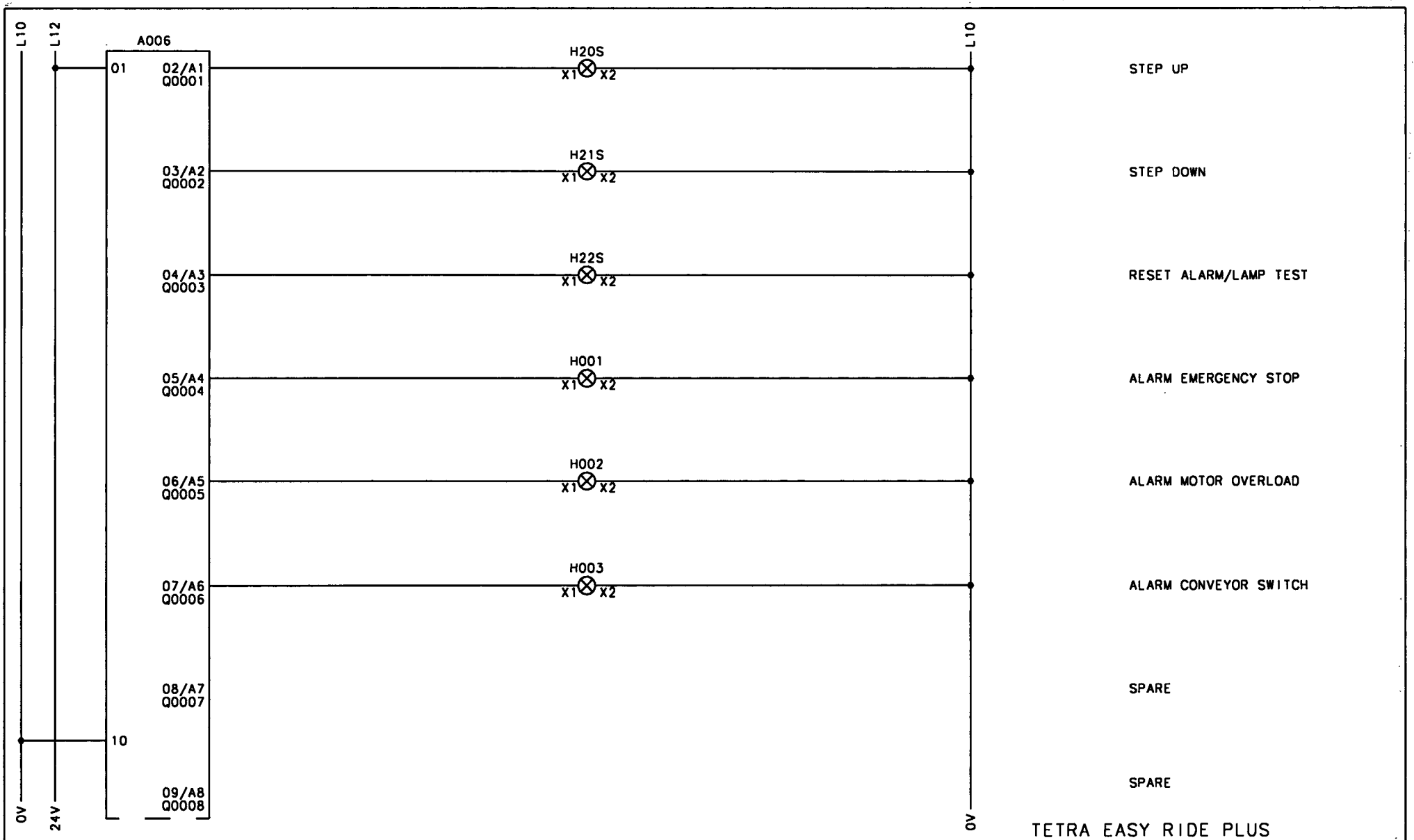

TETRA EASY RIDE PLUS

Note	AA					Tetra Pak	Designer PNO	Date 010101	Approved	Date	Doc. class -
ECN No.	85617						Machine SEE ABOVE	Denomination CIRCUIT DIAGRAM			
Sign./Date	AMM/010101					Company Tetra Brik PS AB		Drawing No 45187-0032			Page -
Appr./Date						Drawing remarks					

This drawing must not without the consent of Tetra Pak:
be copied, transmitted or disclosed to any third party.

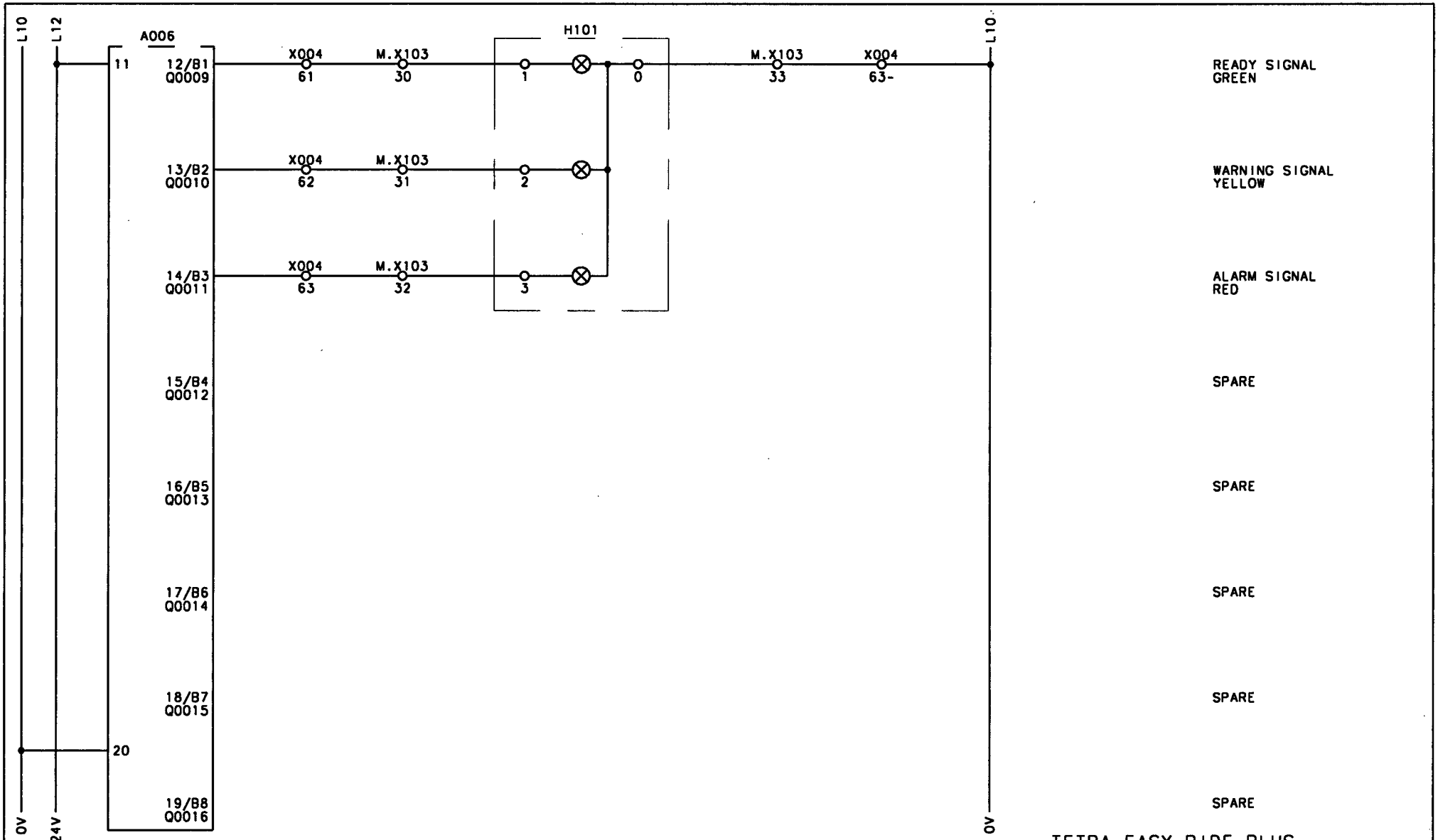

TETRA EASY RIDE PLUS

Role	AA	AB				Tetra Pak	Designer PNO	Date 011115	Approved	Date	Doc. class -
ECN No.	85617	102364					Machine SEE ABOVE	Denomination CIRCUIT DIAGRAM		
Sign./Date	AMM/010101	AMM/011115								
Appr./Date					Drawing remarks	Company Tetra Brik PS AB		Drawing No 45187-0033		Page -

This drawing must not without the consent of Tetra Pak:
be copied, transmitted or disclosed to any third party.

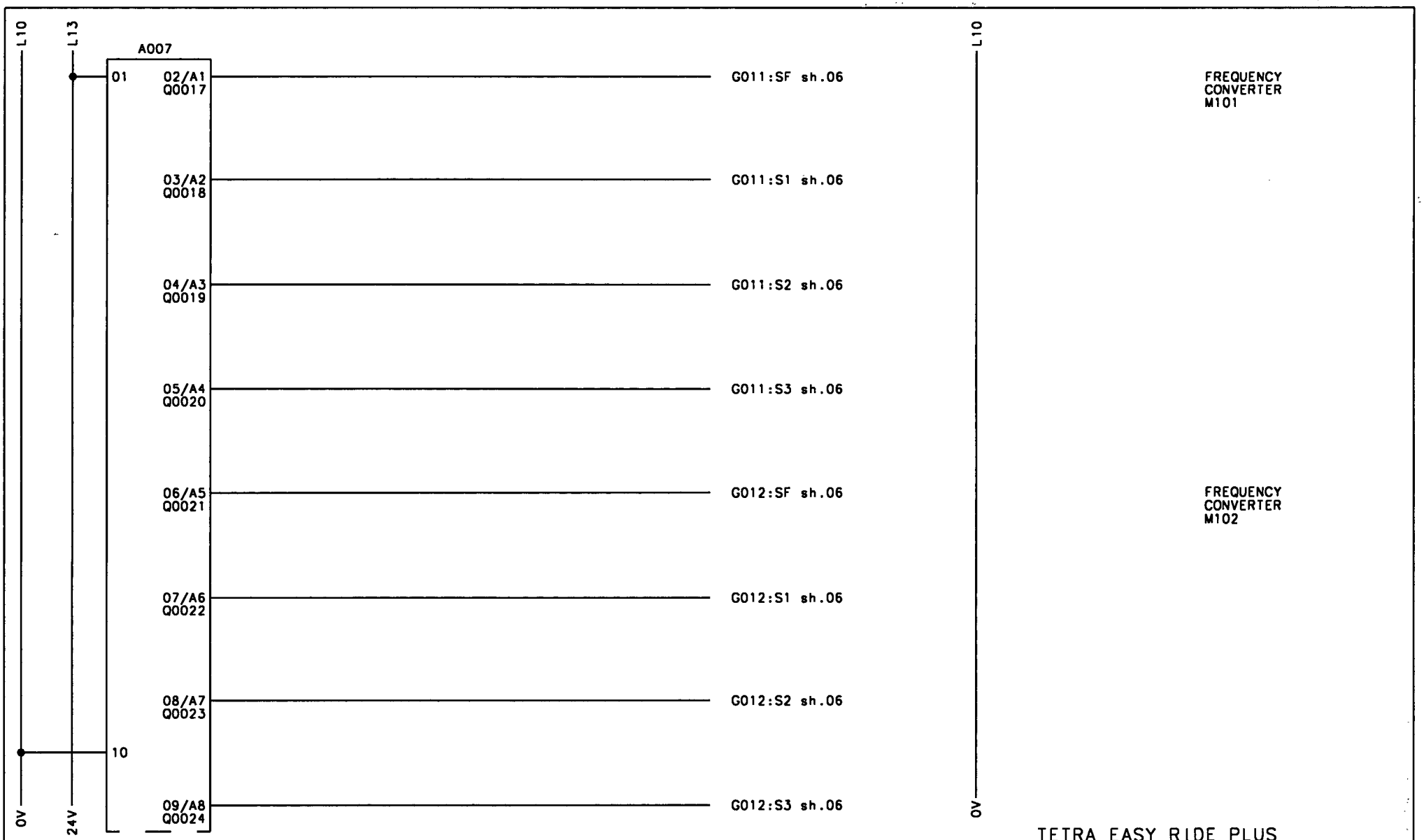

TETRA EASY RIDE PLUS

Note	AA					Tetra Pak	Designer PNO	Date 010101	Approved	Date	Doc. class -
ECN No.	85617						Machine SEE ABOVE	Denomination CIRCUIT DIAGRAM			
Sign./Date	AMM/010101						Company Tetra Brik PS AB	Drawing No 45187-0034			Page -
Appr./Date						Drawing remarks					

This drawing must not without the consent of Tetra Pak: be copied, transmitted or disclosed to any third party.

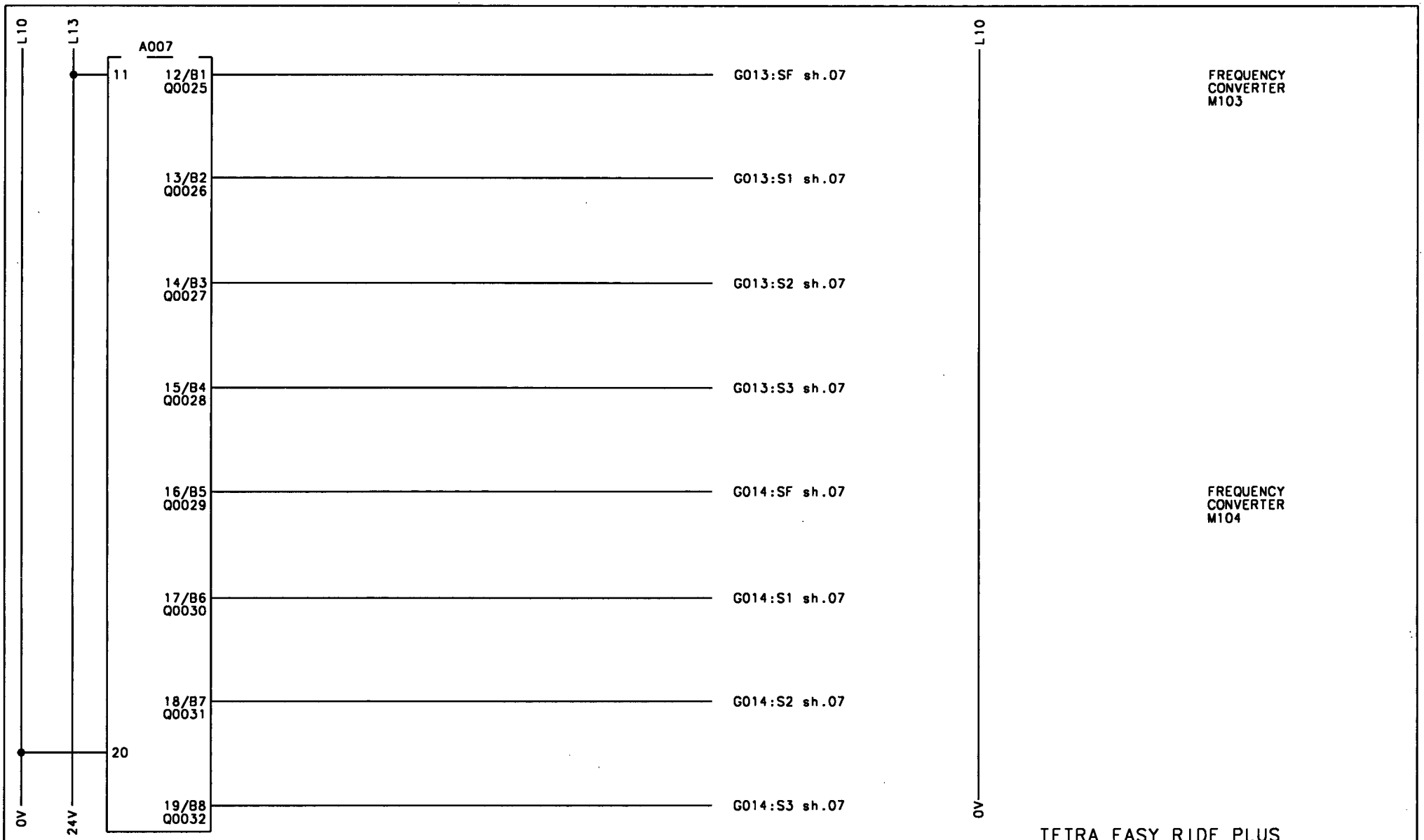

TETRA EASY RIDE PLUS

Note	AA					Tetra Pak	Designer PNO	Date 010101	Approved	Date	Doc. class -
ECN No.	85617						Machine SEE ABOVE	Denomination CIRCUIT DIAGRAM		
Sign./Date	AMM/010101						Company Tetra Brik PS AB	Drawing No 45187-0035		Page -
Appr./Date						Drawing remarks				

This drawing must not without the consent of Tetra Pak:
be copied, transmitted or disclosed to any third party.

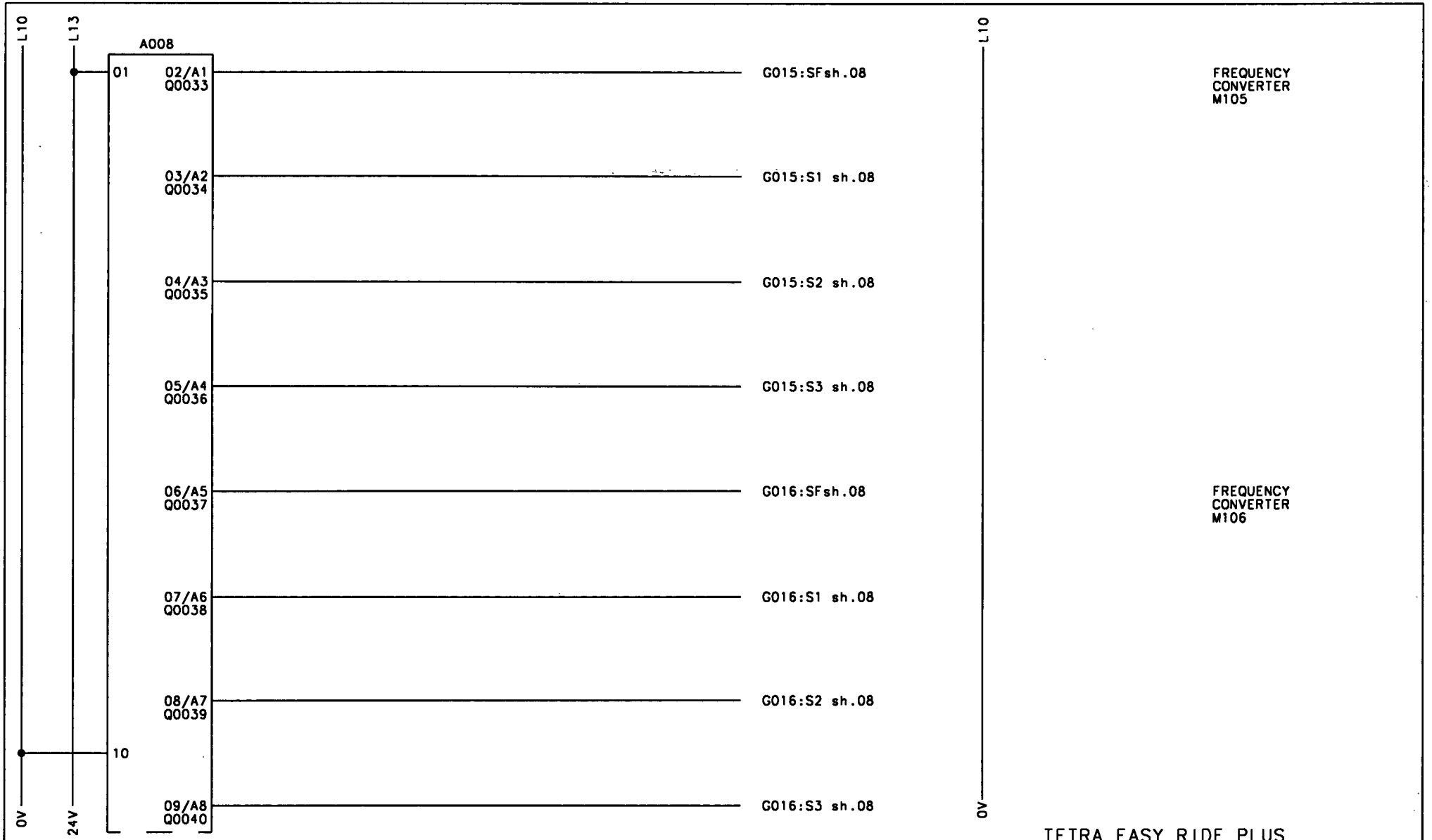

TETRA EASY RIDE PLUS

Note	AA					Tetra Pak	Designer PNO	Date 010101	Approved	Date	Doc. class -
ECN No.	85617						Machine SEE ABOVE	Denomination CIRCUIT DIAGRAM		
Sign./Date	AMM/010101						Company Tetra Brik PS AB	Drawing No 45187-0036		Page -
Appr./Date						Drawing remarks				

This drawing must not without the consent of Tetra Pak: be copied, transmitted or disclosed to any third party.

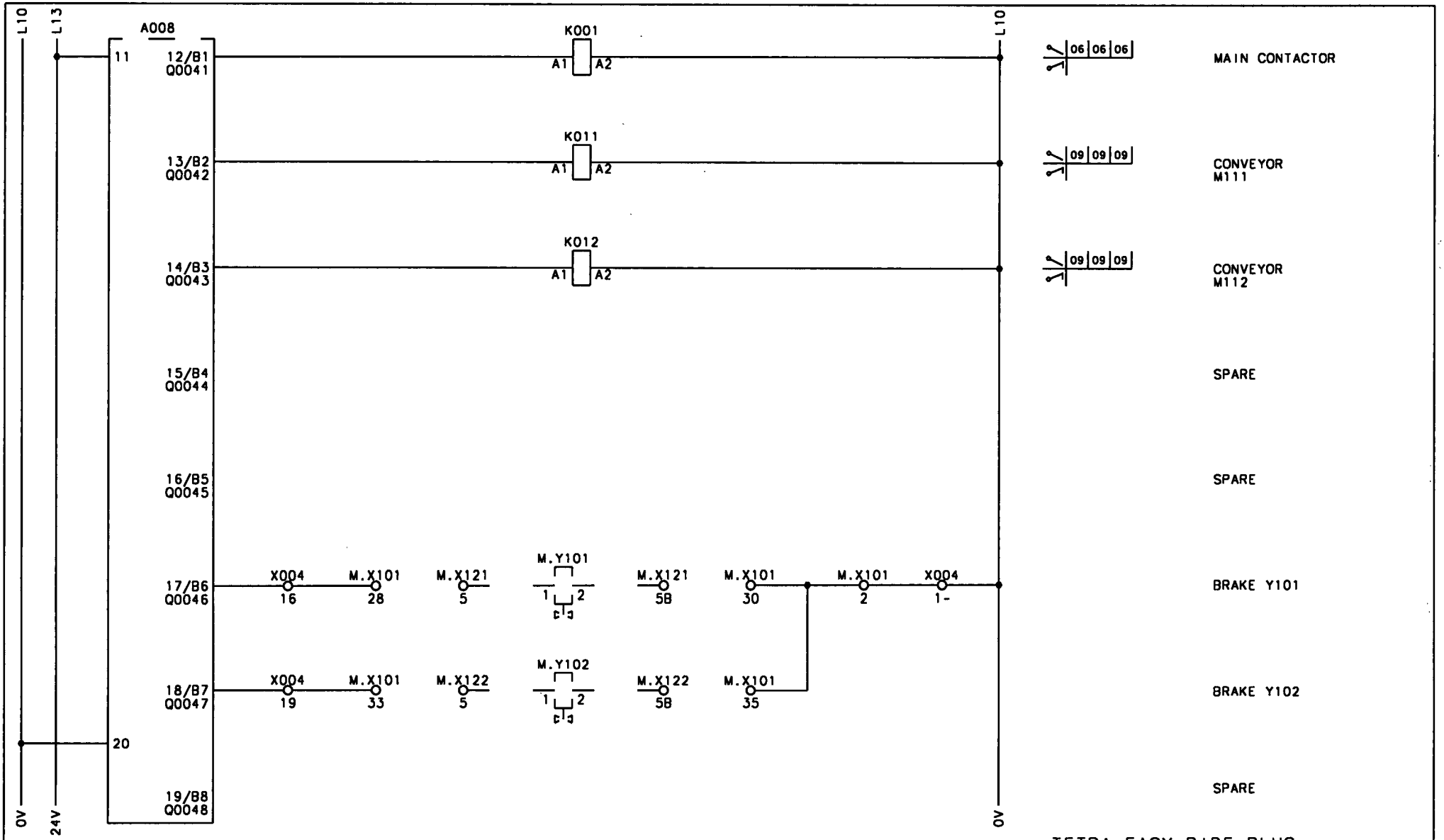

TETRA EASY RIDE PLUS

Note	AA					Tetra Pak	Designer PNO	Date 010101	Approved	Date	Doc. class -
ECN No.	85617						Machine SEE ABOVE	Denomination CIRCUIT DIAGRAM			
Sign./Date	AMM/010101										
Appr./Date						Drawing remarks	Company Tetra Brik PS AB	Drawing No 45187-0037			Page -

This drawing must not without the consent of Tetra Pak: be copied, transmitted or disclosed to any third party.

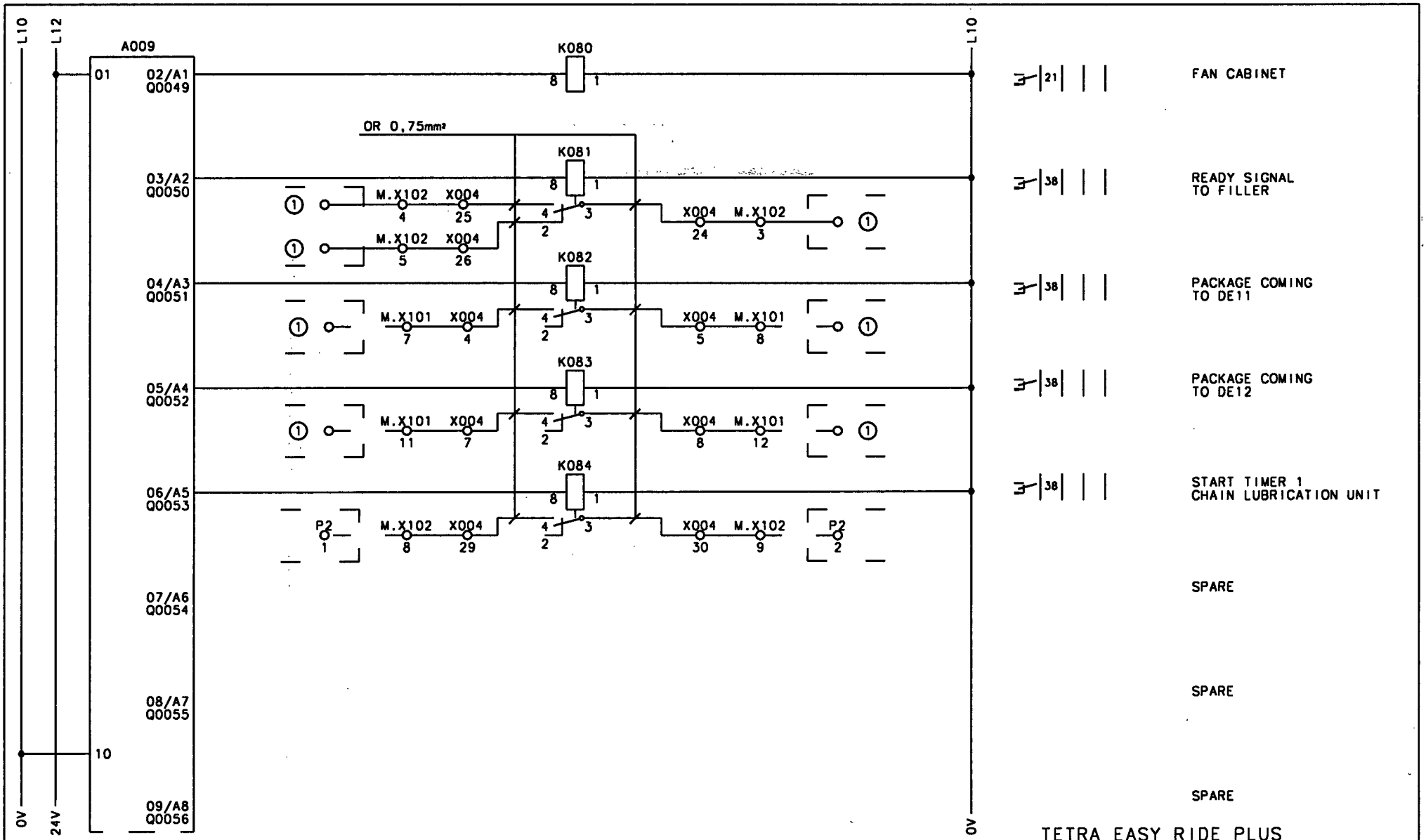

TETRA EASY RIDE PLUS

Note	AA	AB			1 FOR CONNECTION SEE MACHINE MANUAL	Tetra Pak	Designer PNO	Date 011115	Approved	Date	Doc. class –
ECN No.	85617	XXXXX					Machine SEE ABOVE	Denomination CIRCUIT DIAGRAM		
Sign./Date	AMM/010101	AMM/011115				Company Tetra Brik PS AB		Drawing No 45187-0038		Page –
Appr./Date					Drawing remarks					

This drawing must not without the consent of Tetra Pak: be copied, transmitted or disclosed to any third party.

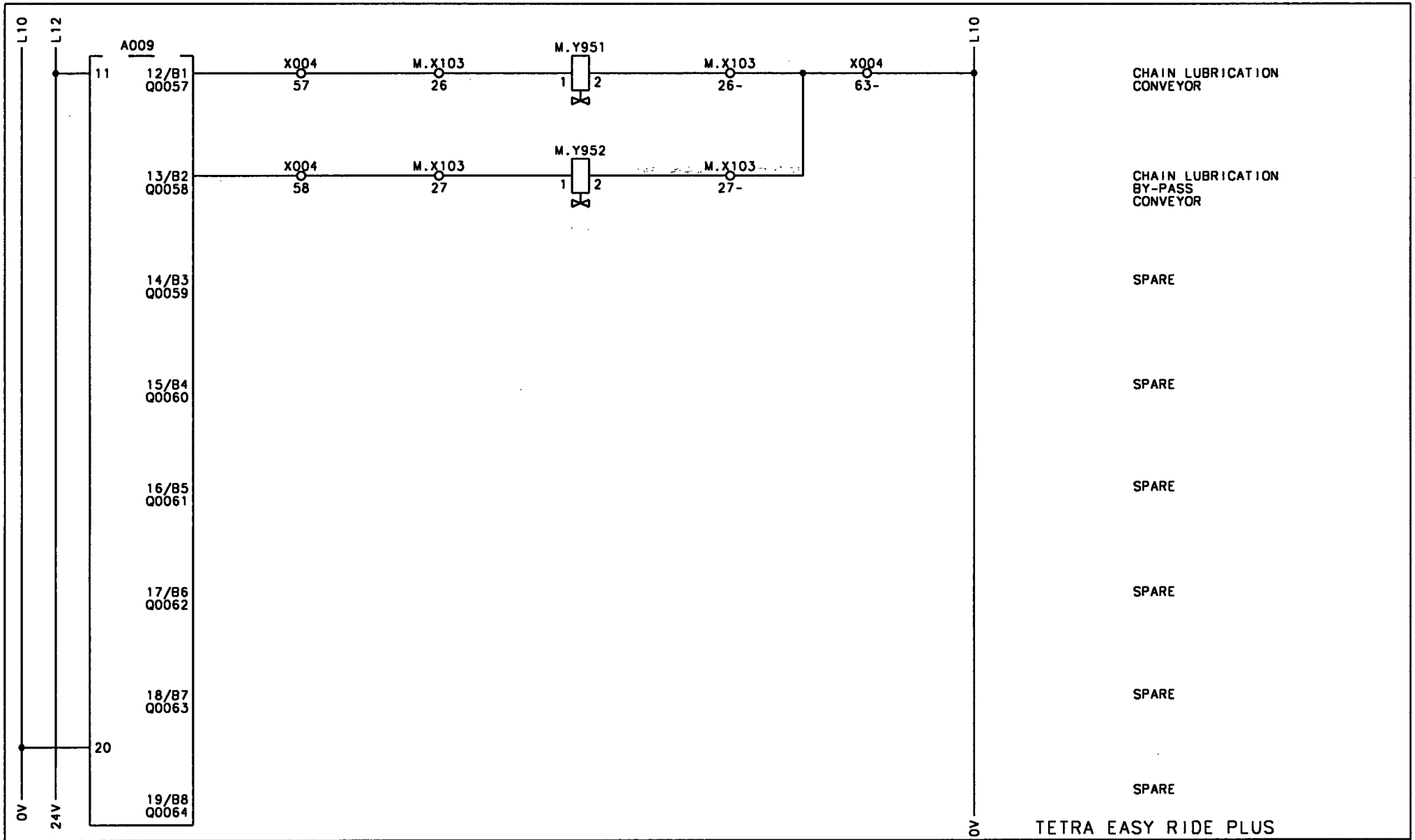

TETRA EASY RIDE PLUS

Note	AA	AB				Tetra Pak	Designer PNO	Date 011115	Approved	Date	Doc. class –
ECN No.	85617	102364					Machine SEE ABOVE	Denomination CIRCUIT DIAGRAM		
Sign./Date	AMM/010101	AMM/011115				Company Tetra Brik PS AB	Drawing No 45187-0039			Page –
Appr./Date					Drawing remarks					

This drawing must not without the consent of Tetra Pak:
be copied, transmitted or disclosed to any third party.

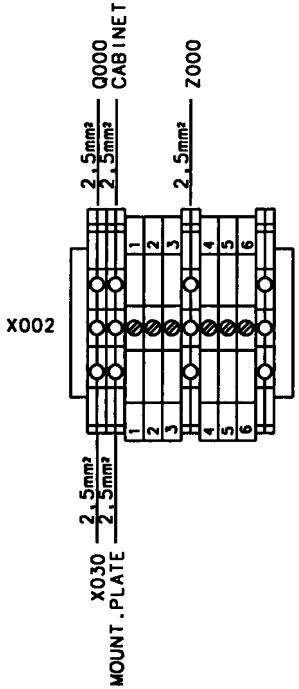

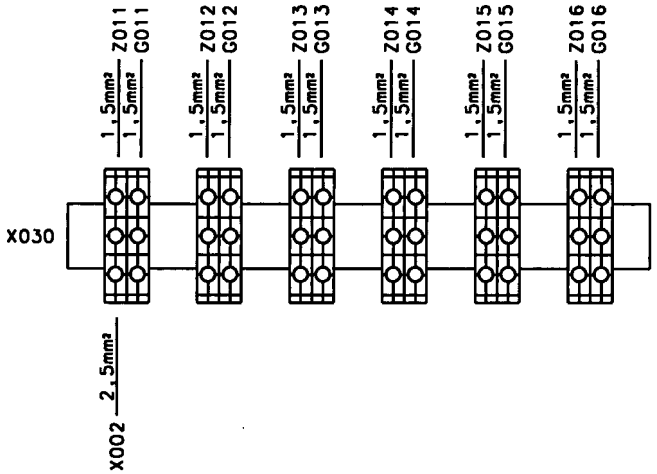

TETRA EASY RIDE PLUS

Note	AA					Tetra Pak	Designer PNO	Date 010101	Approved	Date	Doc. class –
ECN No.	85617						Machine SEE ABOVE	Denomination EARTH SUMMARY		
Sign./Date	AMM/010101					Company Tetra Brik PS AB		Drawing No 45187-0080		Page –
Appr./Date					Drawing remarks					

This drawing must not without the consent of Tetra Pak:
be copied, transmitted or disclosed to any third party.

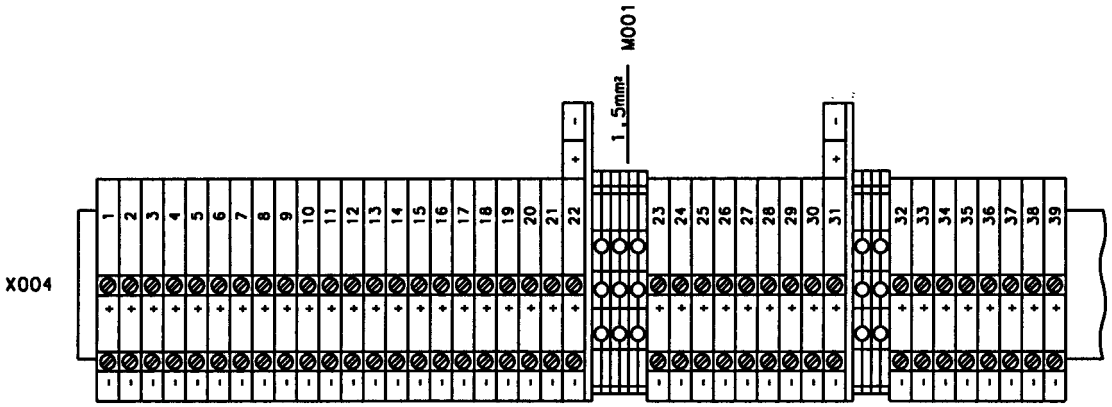

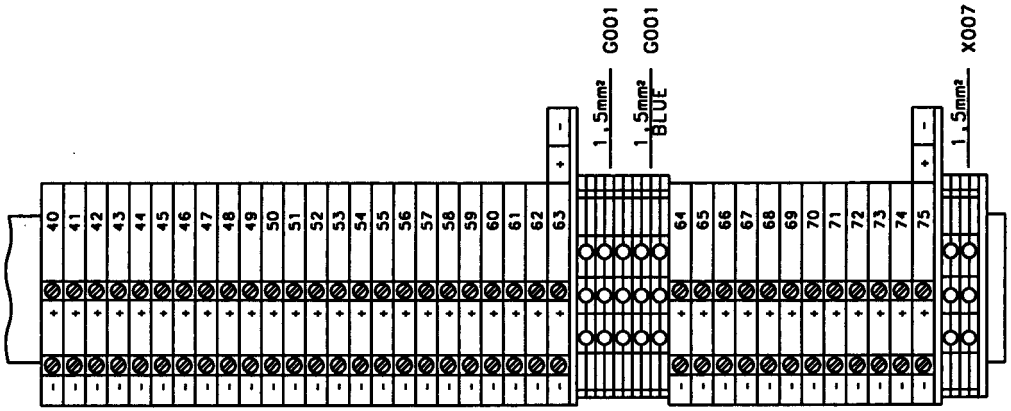

TETRA EASY RIDE PLUS

Note	AA	AB				Tetra Pak	Designer PNO	Date 011115	Approved	Date	Doc. class –
ECN No.	85617	102364					Machine SEE ABOVE	Denomination EARTH SUMMARY		
Sign./Date	AMM/010101	AMM/011115								
Appr./Date					Drawing remarks	Company Tetra Brik PS AB		Drawing No 45187-0081		Page –

ECN 85617 'O'
20011031 MANI

Line	Position	Sheet	Area	Colour
L1	XL1,1		2,5	BK
	Q000,2	05:01		
	Z000,L1	05:01		
	,L1	05:01		
	K001,1	06:01		
	F001,2	20:01		
L2	XL2,1		2,5	BK
	Q000,4	05:01		
	Z000,L2	05:01		
	,L2	05:01		
	K001,3	06:01		
	F002,2	21:01		
L3	XL3,1		2,5	BK
	Q000,6	05:01		
	Z000,L3	05:01		
	,L3	05:01		
	K001,5	06:01		
	F003,2	21:01		
L4	XL4,1		2,5	BK
	K001,2	06:01		
	Q011,1	09:01		
	Q012,1	09:01		
	F011,2	06:01		
	F014,2	07:01		
L5	XL5,1		2,5	BK
	K001,4	06:01		
	Q011,3	09:01		
	Q012,3	09:01		
	F012,2	06:01		
	F015,2	08:01		
L6	XL6,1		2,5	BK
	K001,6	06:01		
	Q011,5	09:01		
	Q012,5	09:01		
	F013,2	07:01		
	F016,2	08:01		
L10	XL10,1		0.75	BU
	G001,-	20:01		
L10	XL10,2		0,75	BU
	G011,SC	06:01		
L10	XL10,3		0,75	BU
	G012,SC	06:01		
L10	XL10,4		0.75	BU
	G013,SC	07:01		
L10	XL10,5		0.75	BU
	G014,SC	07:01		
L10	XL10,6		0,75	BU
	G015,SC	08:01		
L10	XL10,7		0,75	BU
	G016,SC	08:01		
L10	XL10,8		0.75	BU

ECN 85617 'O'
20011031 MANI

Line	Position	Sheet	Area	Colour
L10	A002,01	24:01		
L10	XL10,9		0.75	BU
	A003,01	26:01		
L10	XL10,10		0.75	BU
	A004,01	28:01		
L10	XL10,11		0.75	BU
	A005,01	30:01		
L10	XL10,12		0,75	BU
	A006,10	32:01		
	,20	33:01		
L10	XL10,13		0.75	BU
	A007,10	34:01		
	,20	35:01		
L10	XL10,14		0.75	BU
	A008,10	36:01		
	,20	37:01		
L10	XL10,15		0,75	BU
	A009,10	38:01		
	,20	39:01		
L10	XL10,16		0,75	BU
	K001,A2	37:01		
	K011,A2	37:01		
	K012,A2	37:01		
	K097,A2	23:01		
	K098,A2	23:01		
	K080,1	38:01		
	K081,1	38:01		
	K082,1	38:01		
	K083,1	38:01		
	K084,1	38:01		
L10	XL10,17			
	X004,22-	20:01		
L10	XL10,18			
	X004,31-	20:01		
L10	XL10,19			
	X004,63-	20:01		
L10	XL10,20			
	X004,75-	20:01		
L10	XL10,21		0,75	BU
	H21S,X2	32:01		
	H20S,X2	32:01		
	H22S,X2	32:01		
	H001,X2	32:01		
	H002,X2	32:01		
	H003,X2	32:01		
L11	XL11,1		0.75	BU
	F091,2	20:01		
L11	XL11,2		0,75	BU
	G011,MC	06:01		

ECN 85617 'O'
20011031 MANI

Line	Position	Sheet	Area	Colour
L11	G012,MC	06:01		
	G013,MC	07:01		
	G014,MC	07:01		
	G015,MC	08:01		
	G016,MC	08:01		
L11	XL11,3			
	Q011,21	26:01		
	Q012,21	26:01		
L11	XL11,4			
	X004,22+	20:01		
L11	XL11,5			
	X004,31+	20:01		
L11	XL11,6			
	X004,63+	20:01		
L11	XL11,7			
	X004,75+	20:01		
L11	XL11,8		0,75	BU
	S001,13	24:01		
	S21H,13	24:01		
	S20H,13	24:01		
	S22H,13	24:01		
L12	XL12,1		0.75	BU
	F092,2	20:01		
L12	XL12,2		0.75	BU
	K097,2	20:01		
	,22	24:01		
L12	XL12,3		0,75	BU
	A006,01	32:01		
	,11	33:01		
L12	XL12,4		0,75	BU
	A009,01	38:01		
	,11	39:01		
L12	XL12,5			
	S099,11	23:01		
L13	XL13,1		0.75	BU
	K098,2	20:01		
L13	XL13,2		0,75	BU
	A002,02	24:01		
L13	XL13,3		0.75	BU
	A007,01	34:01		
	,11	35:01		
L13	XL13,4		0.75	BU
	A008,01	36:01		
	,11	37:01		
L13	XL13,5		0,75	BU
	S001,23	24:01		

ECN 85617 'O'
20011031 MANI

Position	Sheet	Position	Sheet	Position	Sheet	Position	Sheet
X002,1	09:01	X004,12	28:01	X004,39	28:01	X004,69	
,2	09:01	,13	25:01	,40		,70	
,3	09:01	,14	30:01	,41	28:01	,71	
,4	09:01	,15	30:01	,42		,72	
,5	09:01	,16	37:01	,43	28:01	,73	
,6	09:01	,17	30:01	,44		,74	
		,18	30:01	,45	29:01	,75	
X003,N	05:01	,19	37:01	,46		,75+	20:01
,1	06:01	,20	30:01	,47	29:01	,75-	20:01
,2	06:01	,21	30:01	,48			
,3	07:01	,22	25:01	,49	29:01	M.X101,1	31:01
,4	07:01	,22+	20:01	,50		,2	31:01
,5	08:01	,22-	20:01	,51	29:01	,3	31:01
,6	08:01	,23	27:01	,52	25:01	,4	29:01
,7	20:01	,23+	27:01	,53	25:01	,5	27:01
,8	21:01	,24	38:01	,54	25:01	,6	27:01
,9	21:01	,25	38:01	,55	25:01	,7	38:01
,10		,26	38:01	,56	25:01	,8	38:01
		,27	23:01	,57	39:01	,9	27:01
X004,1	31:01	,28	23:01	,58	39:01	,10	27:01
,1+	31:01	,29	38:01	,59	23:01	,11	38:01
,1-	31:01	,30	38:01	,60	23:01	,12	38:01
,2	29:01	,31	25:01	,61	33:01	,13	22:01
,3	27:01	,31+	20:01	,62	33:01	,14	22:01
,4	38:01	,31-	20:01	,63	33:01	,15	29:01
,5	38:01	,32		,63+	20:01	,16	29:01
,6	27:01	,33	28:01	,63-	20:01	,17	29:01
,7	38:01	,34		,64		,18	29:01
,8	38:01	,35	28:01	,65		,19	29:01
,9	29:01	,36		,66		,20	29:01
,10	29:01	,37	28:01	,67		,21	28:01
,11	28:01	,38		,68		,22	28:01

ECN 85617 'O'
20011031 MANI

Position	Sheet	Position	Sheet	Position	Sheet	Position	Sheet
M.X101,23	28:01	M.X103,1+	28:01	M.X103,12	28:01	M.X103,23+	25:01
,24	28:01	,1-	28:01	,12+	28:01	,24	25:01
,25	25:01	,2	28:01	,12-	28:01	,24+	25:01
,26	30:01	,2+	28:01	,13		,25	25:01
,27	30:01	,2-	28:01	,13+	29:01	,25+	25:01
,28	37:01	,3		,13-	29:01	,26	39:01
,29	30:01	,3+	28:01	,14	29:01	,26-	39:01
,30	37:01	,3-	28:01	,14+	29:01	,27	39:01
,31	30:01	,4	28:01	,14-	29:01	,27-	39:01
,32	30:01	,4+	28:01	,15		,28	23:01
,33	37:01	,4-	28:01	,15+	29:01	,29	23:01
,34	30:01	,5		,15-	29:01	,30	33:01
,35	37:01	,5+	28:01	,16	29:01	,31	33:01
,36	30:01	,5-	28:01	,16+	29:01	,32	33:01
,37	30:01	,6	28:01	,16-	29:01	,33	33:01
,38	30:01	,6+	28:01	,17			
,39	30:01	,6-	28:01	,17+	29:01	M.X111,1	28:01
,40	25:01	,7		,17-	29:01	,2	28:01
		,7+	28:01	,18	29:01	,3	28:01
M.X102,1	27:01	,7-	28:01	,18+	29:01	,4	28:01
,2	27:01	,8	28:01	,18-	29:01	,5	28:01
,3	38:01	,8+	28:01	,19		,6	28:01
,4	38:01	,8-	28:01	,19+	29:01	,7	28:01
,5	38:01	,9		,19-	29:01	,8	28:01
,6	23:01	,9+	28:01	,20	29:01	,9	28:01
,7	23:01	,9-	28:01	,20+	29:01	,10	28:01
,8	38:01	,10	28:01	,20-	29:01	,11	25:01
,9	38:01	,10+	28:01	,21	25:01	,12	25:01
,10	25:01	,10-	28:01	,21+	25:01		
,11	25:01	,11		,22	25:01	M.X114,1	29:01
		,11+	28:01	,22+	25:01	,2	29:01
M.X103,1		,11-	28:01	,23	25:01	,3	29:01

ECN 85617 'O'
20011031 MANI

Position	Sheet	Position	Sheet	Position	Sheet	Position	Sheet
M.X114,4	29:01	M.X122,3					
,5	29:01	,3A	30:01				
		,3B	30:01				
M.X115,1	29:01	,4	30:01				
,2	29:01	,4A	30:01				
,3	29:01	,4B	30:01				
,4	29:01	,5	37:01				
,5	29:01	,5B	37:01				
M.X121,5A	30:01	M.X131,1	30:01				
,1		,2	30:01				
,1A	30:01	,3	30:01				
,1B	30:01	,4	30:01				
,2	30:01	,5	30:01				
,2A	30:01	,6	30:01				
,2B	30:01	,7	30:01				
,3		,8	30:01				
,3A	30:01	,9	30:01				
,3B	30:01	,10	30:01				
,4	30:01	,11	25:01				
,4A	30:01	,12	25:01				
,4B	30:01						
,5	37:01	M.X151,1	31:01				
,5B	37:01	,2	31:01				
		,3	31:01				
M.X122,5A	30:01	,6	29:01				
,1		,7	29:01				
,1A	30:01	,8	29:01				
,1B	30:01	,9	29:01				
,2	30:01	,10	29:01				
,2A	30:01						
,2B	30:01						

This drawing must not without the consent of Tetra Pak:
be copied, transmitted or disclosed to any third party.

ALTERATION MESSAGES

ECM NO.	TEXT		
85617	DOCUMENTATION RELEASED	B-679484-0100	TETRA EASY RIDE PLUS
102364	NUMBER CORRECTION ON X004 TERMINAL ON CIRCUIT DIAGRAM PAGE: 23,25,28,29,33,38,39 & 81	B-679484-0100	TETRA EASY RIDE PLUS

TETRA EASY RIDE PLUS

Note	AA	AB				Tetra Pak	Designer PNO	Date 010101	Approved	Date	Doc. class –
ECM No.	85617	102364					Machine SEE ABOVE	Denomination ALTERATION MESSAGES			
Sign./Date	AMM/010101	AMM/011115				Company Tetra Brik PS AB		Drawing No 45187-0099			Page –
Appr./Date					Drawing remarks						

11 Mains & connection diagrams

2.2TH601381en.fm

Note! For table of contents, see chapter 7 (Table of contents for electrical documents).

2.2TH601381en.fm

This drawing must not without the consent of Tetra Pak: be copied, transmitted or disclosed to any third party.

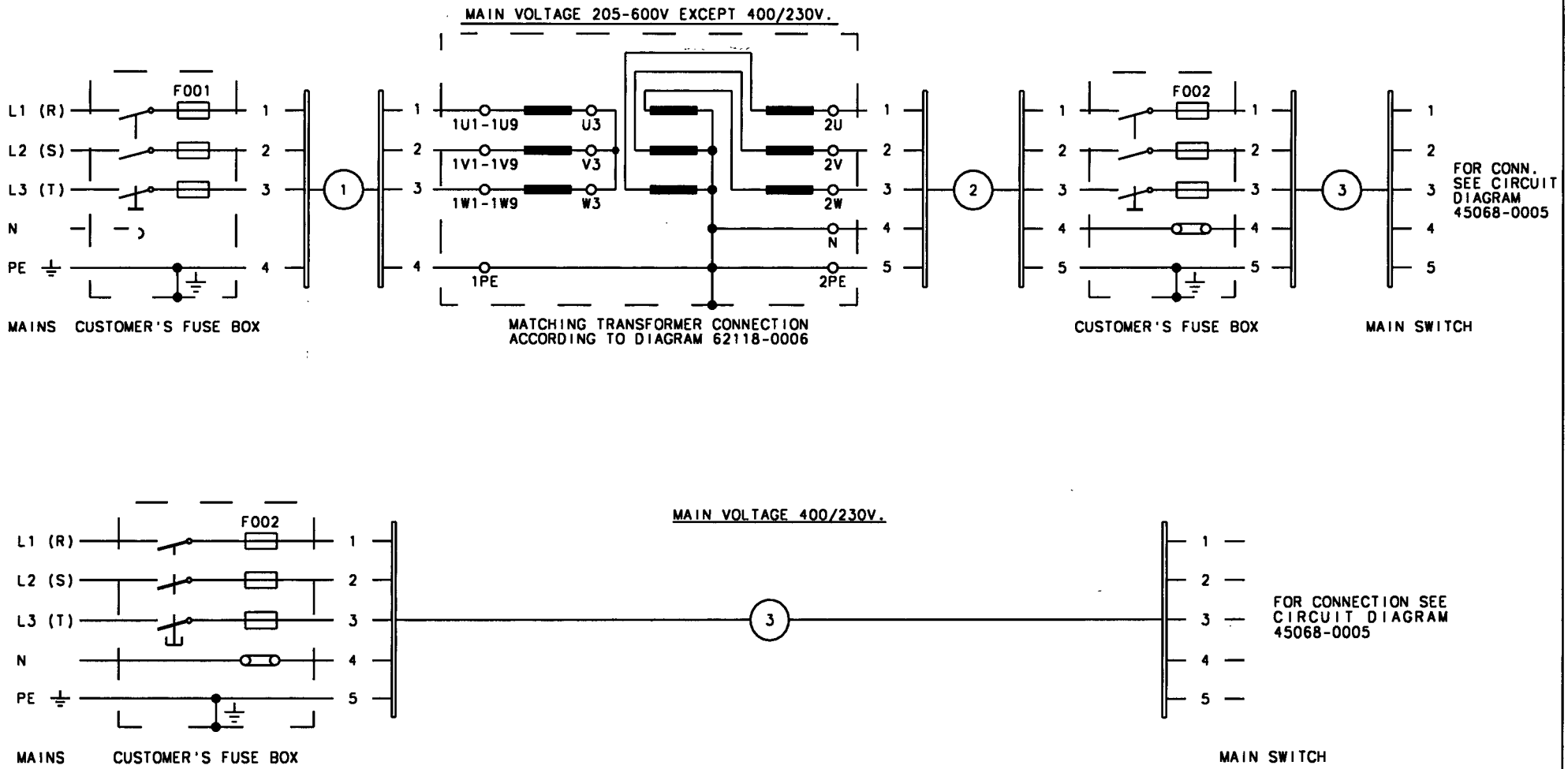

TETRA EASY RIDE PLUS

Note	AA				ATTENTION: PROTECTIVE BONDING TO BE	Tetra Pak	Designer PNO	Date 010101	Approved	Date	Doc. class –
ECN No.	85617				CARRIED OUT ACCORDING TO LOCAL REGULATIONS		Machine SEE ABOVE	Denomination MAINS CONNECTION DIAGRAM		
Sign./Date	AMM/010101					Company Tetra Brik PS AB		Drawing No 62118-0005		Page –
Appr./Date					Drawing remarks					

This drawing must not without the consent of Tetra Pak: be copied, transmitted or disclosed to any third party.

MAIN VOLTAGE	FUSES (SLOW) ①F001	FUSES (SLOW) ①F002	AREA TO CU CABLES NO. 1	2	3	PRIMARY CONN.ON MATCHING TRANSFORMER			SECONDARY CONN. ON MATCHING TRANSFORMER
V	A	A	mm²	mm²	mm²	MAINS	TAP	CONNECT	
600/347 3x600	25	10	3x2,5/2,5	4x4/4	4x2,5/2,5	L1 L2 L3 N PE	1U9 1V9 1W9 N ⏚	1U3 - U4 1V3 - V4 1W3 - W4	PHASE L1 2U PHASE L2 2V PHASE L3 2W NEUTRAL N EARTH 2PE
550/318 3x550	25	10	3x2,5/2,5	4x4/4	4x2,5/2,5	L1 L2 L3 N PE	1U8 1V8 1W8 N ⏚	1U3 - U4 1V3 - V4 1W3 - W4	
500/289 3x500	25	10	3x2,5/2,5	4x4/4	4x2,5/2,5	L1 L2 L3 N PE	1U7 1V7 1W7 N ⏚	1U3 - U4 1V3 - V4 1W3 - W4	
480/277 3x480	25	10	3x2,5/2,5	4x4/4	4x2,5/2,5	L1 L2 L3 N PE	1U6 1V6 1W6 N ⏚	1U3 - U4 1V3 - V4 1W3 - W4	
440/254 3x440	25	10	3x4/4	4x4/4	4x2,5/2,5	L1 L2 L3 N PE	1U5 1V5 1W5 N ⏚	1U2 - U4 1V2 - V4 1W2 - W4	
415/240 3x415	25	10	3x4/4	4x4/4	4x2,5/2,5	L1 L2 L3 N PE	1U5 1V5 1W5 N ⏚	1U1 - U4 1V1 - V4 1W1 - W4	
400x230 (380X220)		10			4x2,5/2,5	L1 L2 L3 N PE	1U4 1V4 1W4 N ⏚		
240/140 3x240	63	10	3x10/10	4x4/4	4x2,5/2,5	L1 L2 L3 N PE	1U3 1V3 1W3 N ⏚	U3 - U4 1U3-1U6 V3 - V4 1V3-1V6 W3 - W4 1W3-1W6	
220/127 3x220	63	10	3x10/10	4x4/4	4x2,5/2,5	L1 L2 L3 N PE	1U2 1V2 1W2 N ⏚	1U2-1U5 U3 - U4 1V2-1V5 V3 - V4 1W2-1W5 W3 - W4	
200/115 3x200	63	10	3x10/10	4x4/4	4x2,5/2,5	L1 L2 L3 N PE	1U1 1V1 1W1 N ⏚	1U1-1U4 U3 - U4 1V1-1V4 V3 - V4 1W1-1W4 W3 - W4	

MATCHING TRANSFORMER
90245-0022

Y/Z II-WIRED

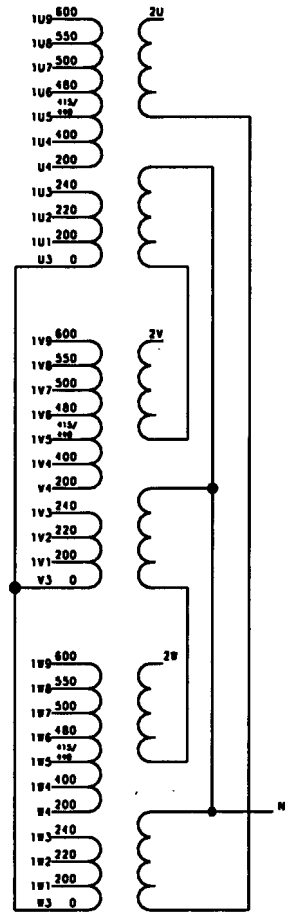

TETRA EASY RIDE PLUS

Note	AA					①RECOMMENDED MAINS FUSE TO ACHIEVE SELECTIVITY	Tetra Pak	Designer PNO	Date 010101	Approved Date	Doc. class –
ECN No.	85617							Machine SEE ABOVE	Denomination MAINS CONNECTION DIAGRAM	
Sign./Date	AMM/010101						Company Tetra Brik PS AB	Drawing No 62118-0006		Page –
Appr./Date						Drawing remarks				

This drawing must not without the consent of Tetra Pak:
be copied, transmitted or disclosed to any third party.

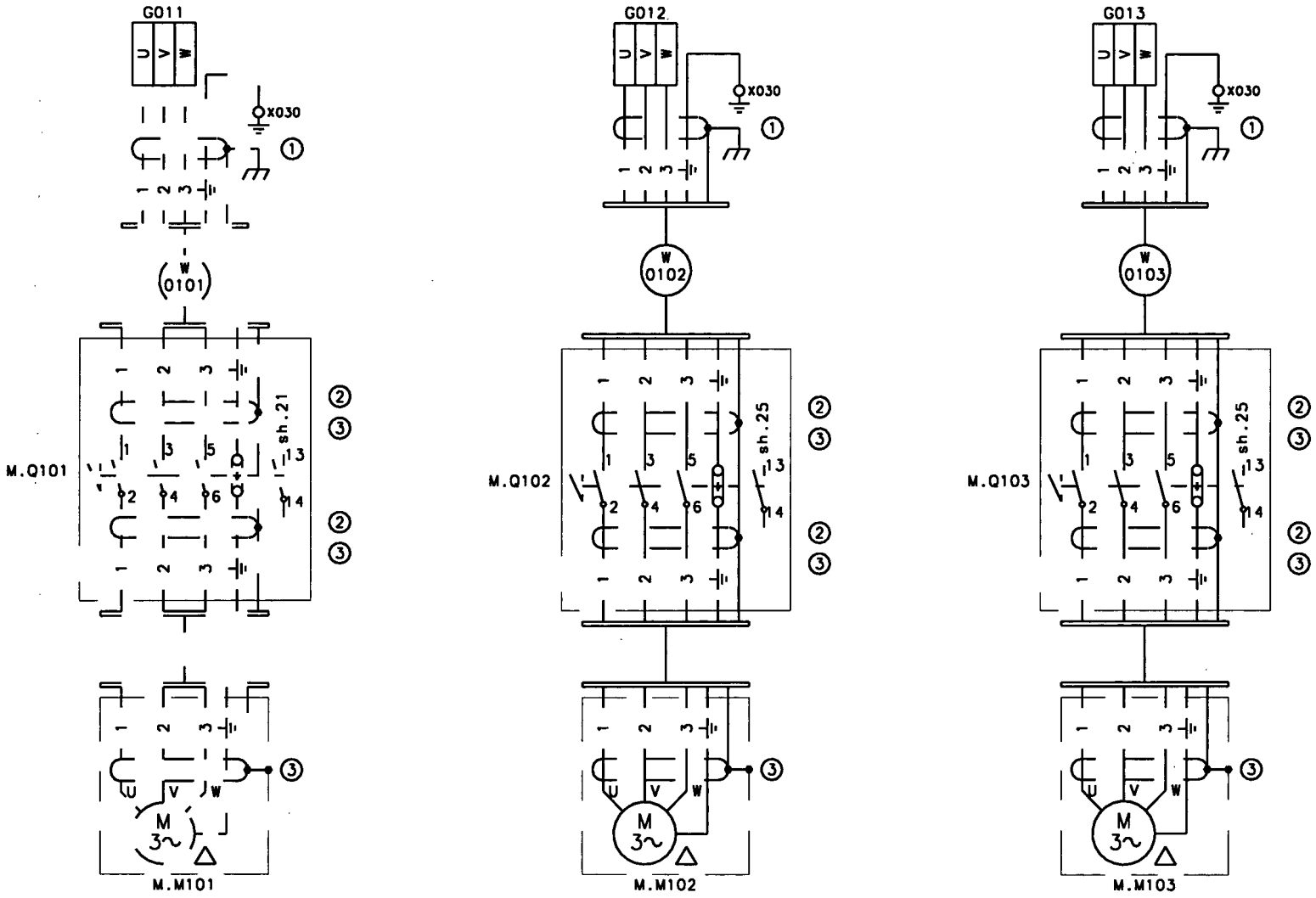

TETRA EASY RIDE PLUS

Note	AA				① SCREEN CONNECTED TO EMC-CLAMP	Tetra Pak	Designer PNO	Date 010101	Approved	Date	Doc. class –
ECN No.	85617				② CABELGLAND CONNECTED TO EMC-PLATE		Machine SEE ABOVE	Denomination CONNECTION DIAGRAM		
Sign./Date	AMM/010101				③ SCREEN CONNECTED TO EMC-CABLEGLAND	Company Tetra Brik PS AB		Drawing No 62118-0010		Page –
Appr./Date					Drawing remarks					

This drawing must not without the consent of Tetra Pak:
be copied, transmitted or disclosed to any third party.

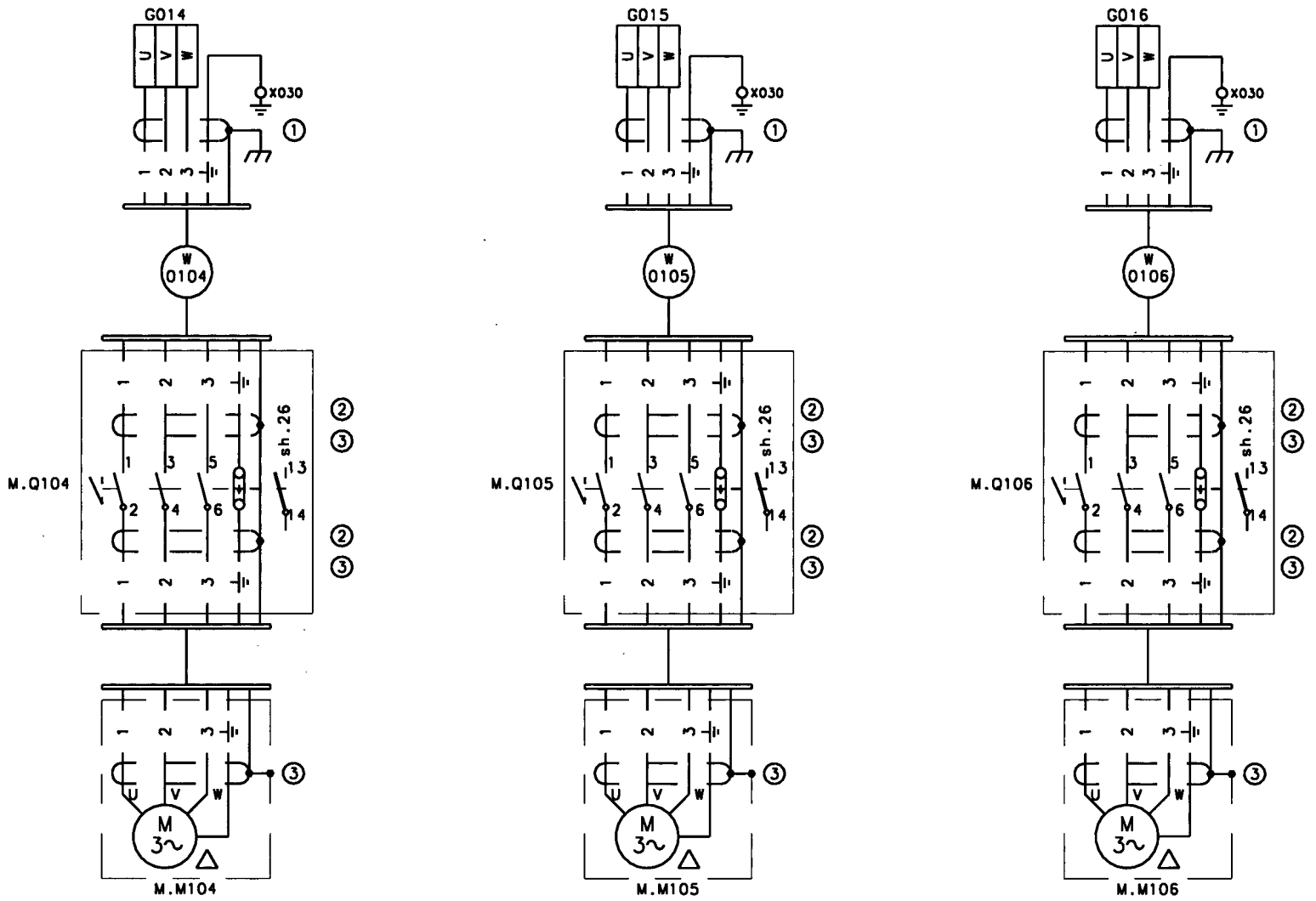

TETRA EASY RIDE PLUS

Note	AA				① SCREEN CONNECTED TO EMC-CLAMP	Tetra Pak	Designer PNO	Date 010101	Approved	Date	Doc. class –
ECN No.	85617				② CABELGLAND CONNECTED TO EMC-PLATE		Machine SEE ABOVE	Denomination CONNECTION DIAGRAM		
Sign./Date	AMM/010101				③ SCREEN CONNECTED TO EMC-CABLEGLAND					
Appr./Date					Drawing remarks	Company Tetra Brik PS AB		Drawing No 62118-0011		Page –

This drawing must not without the consent of Tetra Pak:
be copied, transmitted or disclosed to any third party.

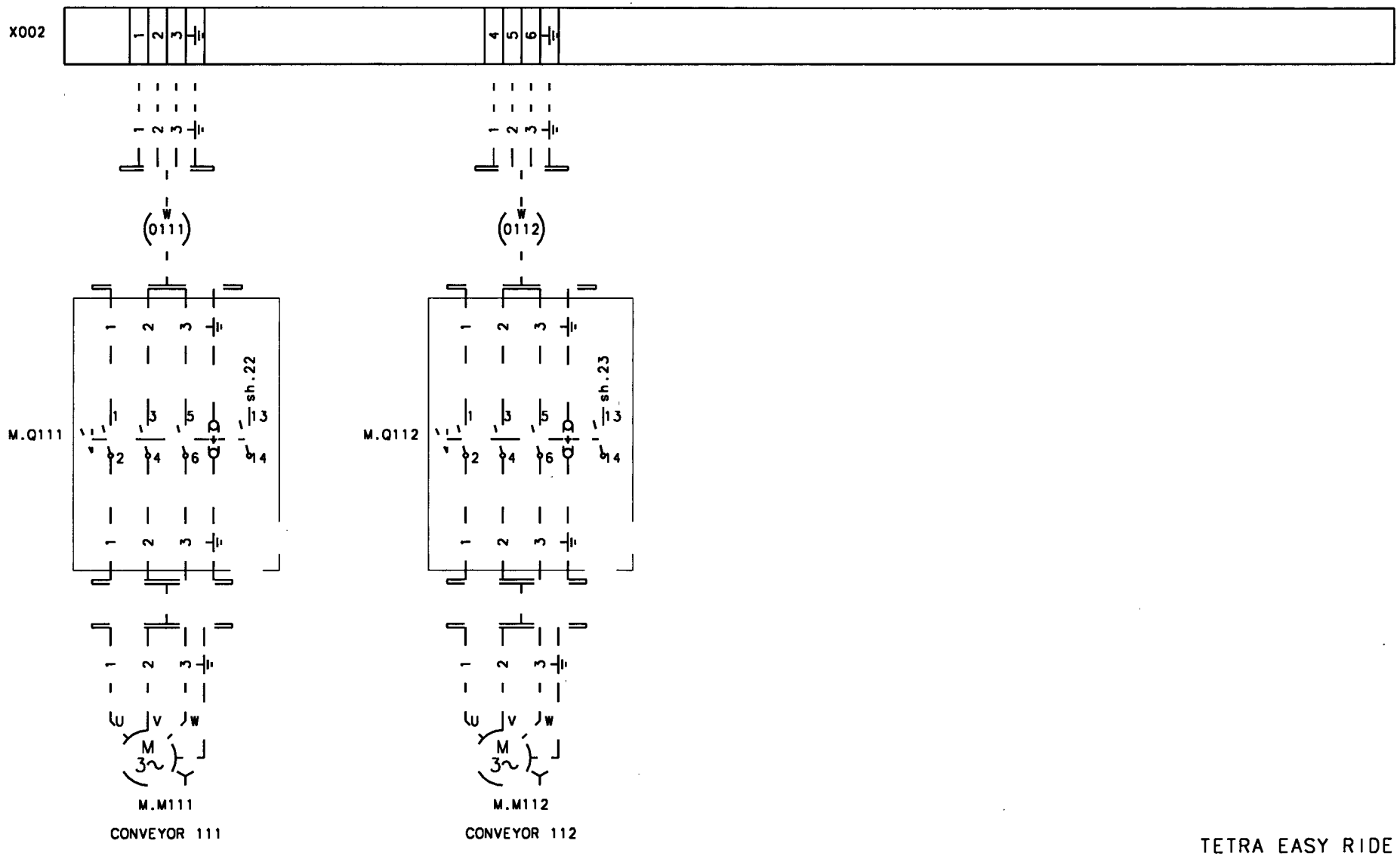

TETRA EASY RIDE PLUS

Note	AA					Tetra Pak	Designer PNO	Date 010101	Approved	Date	Doc. class –
ECN No.	85617						Machine SEE ABOVE	Denomination CONNECTION DIAGRAM			
Sign./Date	AMM/010101						Company Tetra Brik PS AB	Drawing No 62118-0012			Page –
Appr./Date						Drawing remarks					

This drawing must not without the consent of Tetra Pak:
be copied, transmitted or disclosed to any third party.

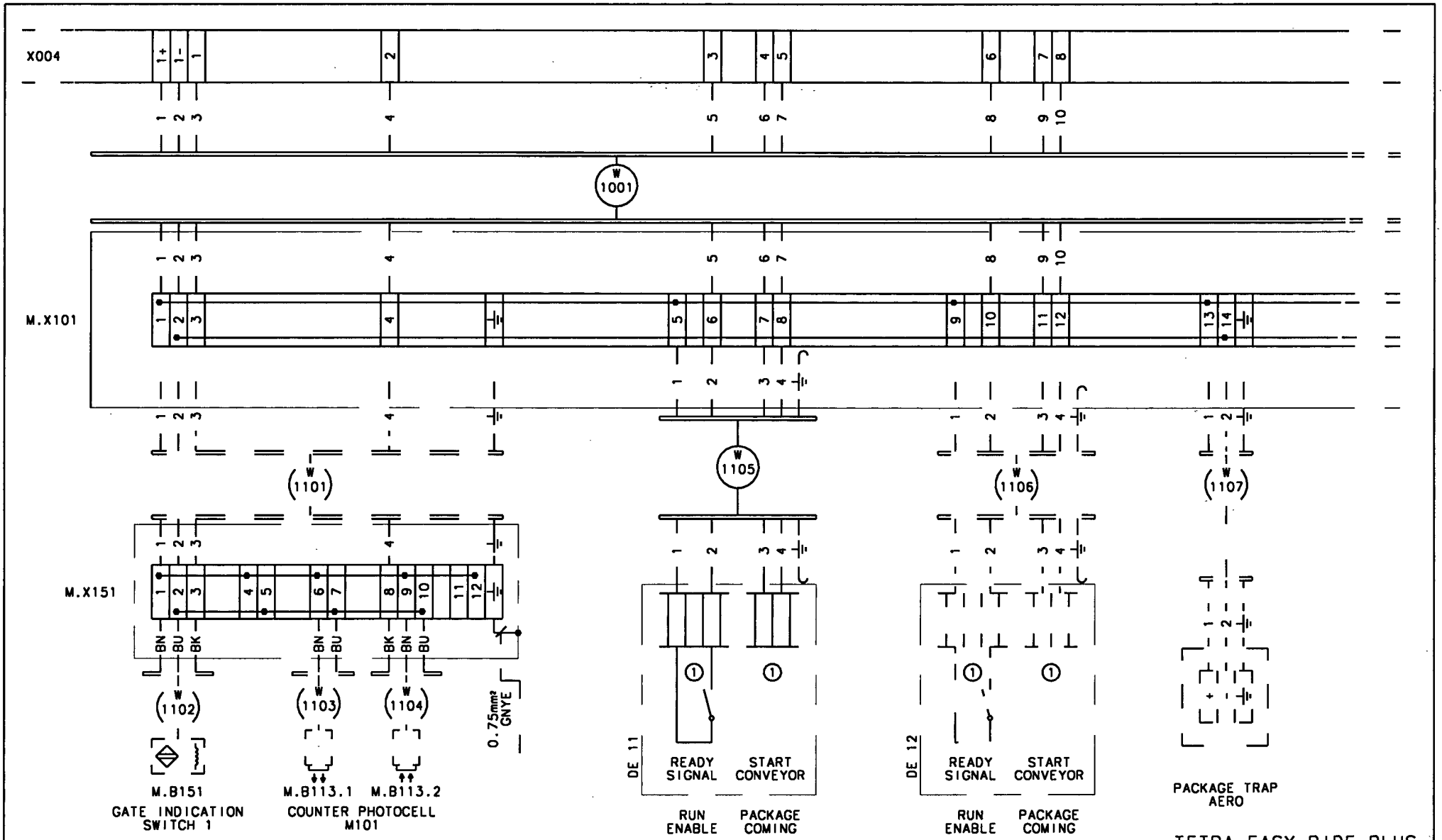

TETRA EASY RIDE PLUS

Note	AA				① FOR CONNECTION SEE IN MACHINE MANUAL	Tetra Pak	Designer ROL	Date 010101	Approved	Date	Doc. class –
ECN No.	85617						Machine SEE ABOVE	Denomination CONNECTION DIAGRAM		
Sign./Date	AMM/010101					Company Tetra Pak Carton Ambient AB		Drawing No 62118-0020		Page –
Appr./Date					Drawing remarks					

This drawing must not without the consent of Tetra Pak: be copied, transmitted or disclosed to any third party.

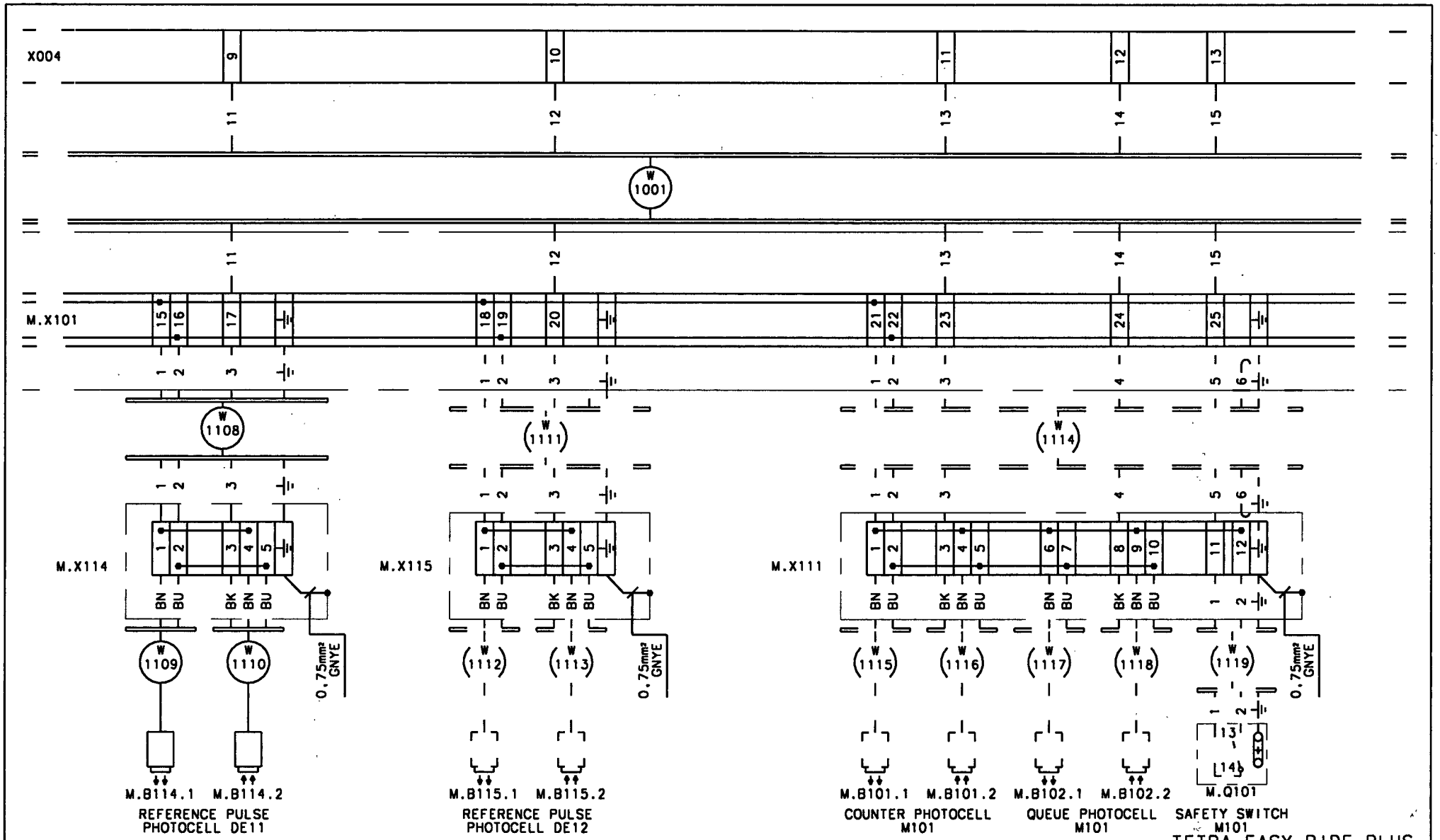

TETRA EASY RIDE PLUS

Note	AA	AB			
ECN No.	85617	102364			
Sign./Date	AMM/010101	AMM/011115			
Appr./Date					Drawing remarks

Tetra Pak

Company: Tetra Brik PS AB

Designer PNO	Date 010101	Approved	Date	Doc. class –
Machine SEE ABOVE	Denomination CONNECTION DIAGRAM			
Drawing No 62118-0021				Page –

This drawing must not without the consent of Tetra Pak:
be copied, transmitted or disclosed to any third party.

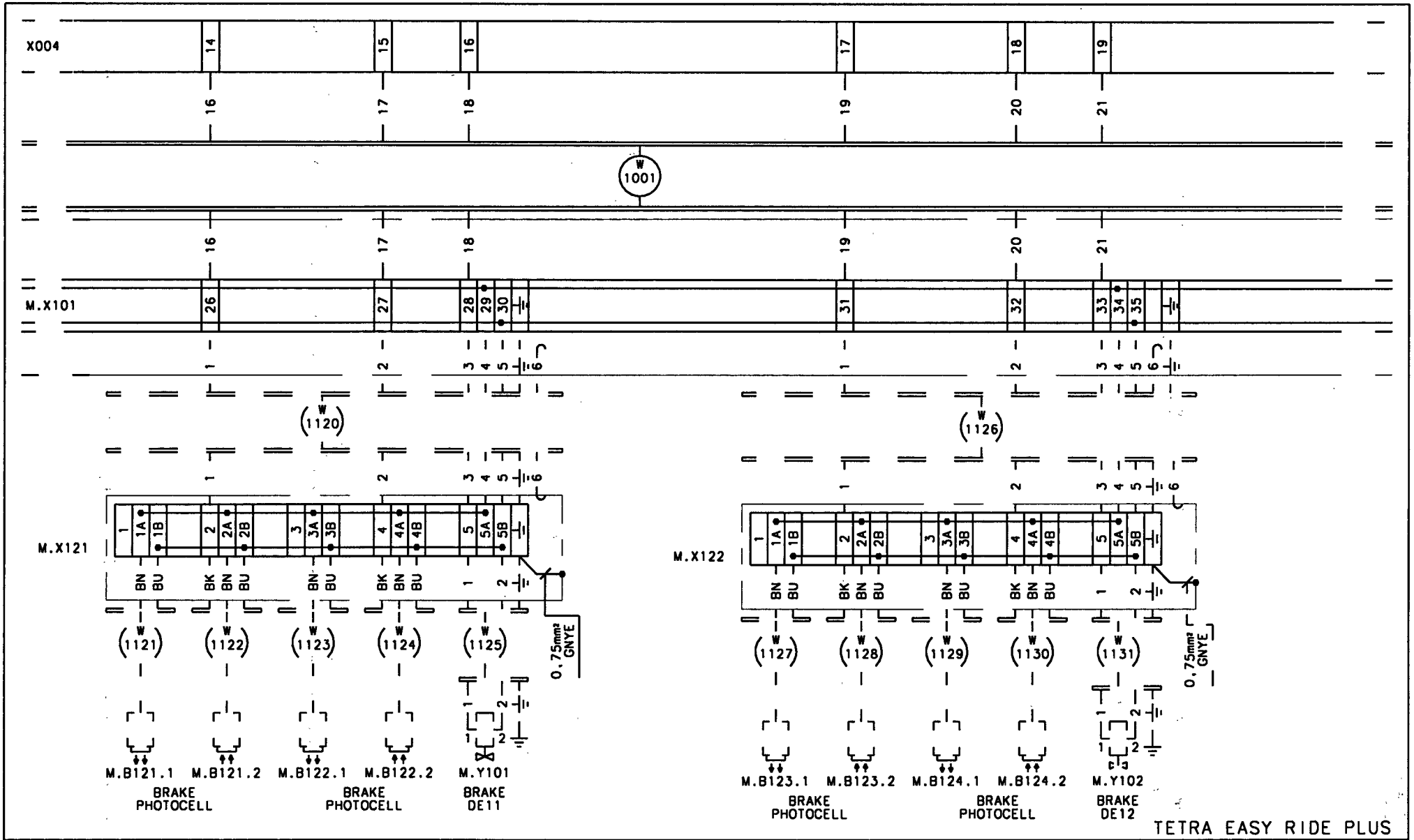

TETRA EASY RIDE PLUS

Note	AA	AB				Tetra Pak	Designer PNO	Date 010101	Approved	Date	Doc. class –
ECN No.	85617	102364					Machine SEE ABOVE	Denomination CONNECTION DIAGRAM		
Sign./Date	AMM/010101	AMM/011115								
Appr./Date					Drawing remarks	Company Tetra Brik PS AB		Drawing No 62118-0022		Page –

This drawing must not without the consent of Tetra Pak: be copied, transmitted or disclosed to any third party.

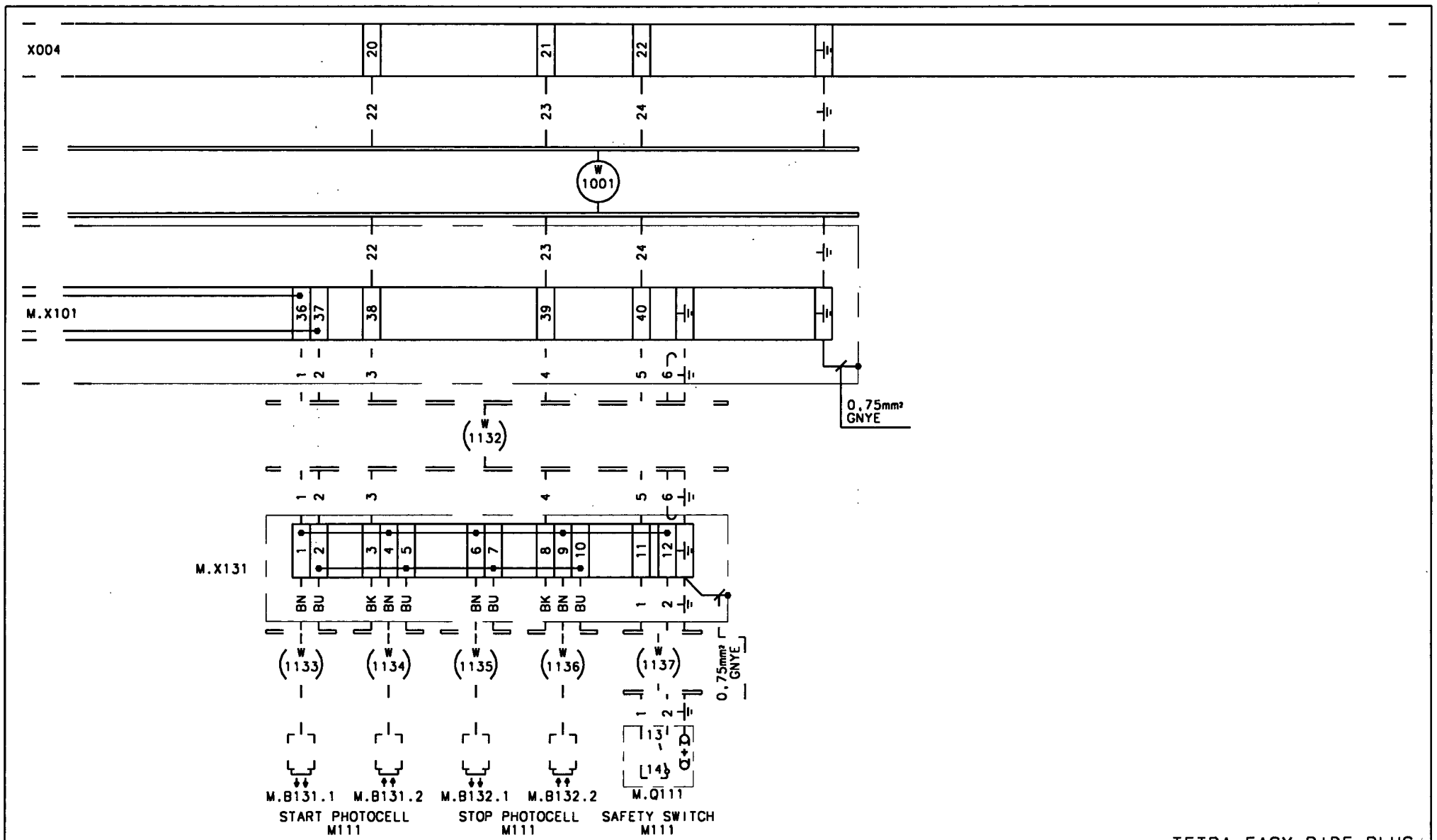

TETRA EASY RIDE PLUS

Note	AA					Tetra Pak	Designer PNO	Date 010101	Approved	Date	Doc. class –
ECN No.	85617						Machine SEE ABOVE	Denomination CONNECTION DIAGRAM		
Sign./Date	AMM/010101									
Appr./Date					Drawing remarks	Company Tetra Brik PS AB		Drawing No 62118-0023		Page –

This drawing must not without the consent of Tetra Pak:
be copied, transmitted or disclosed to any third party.

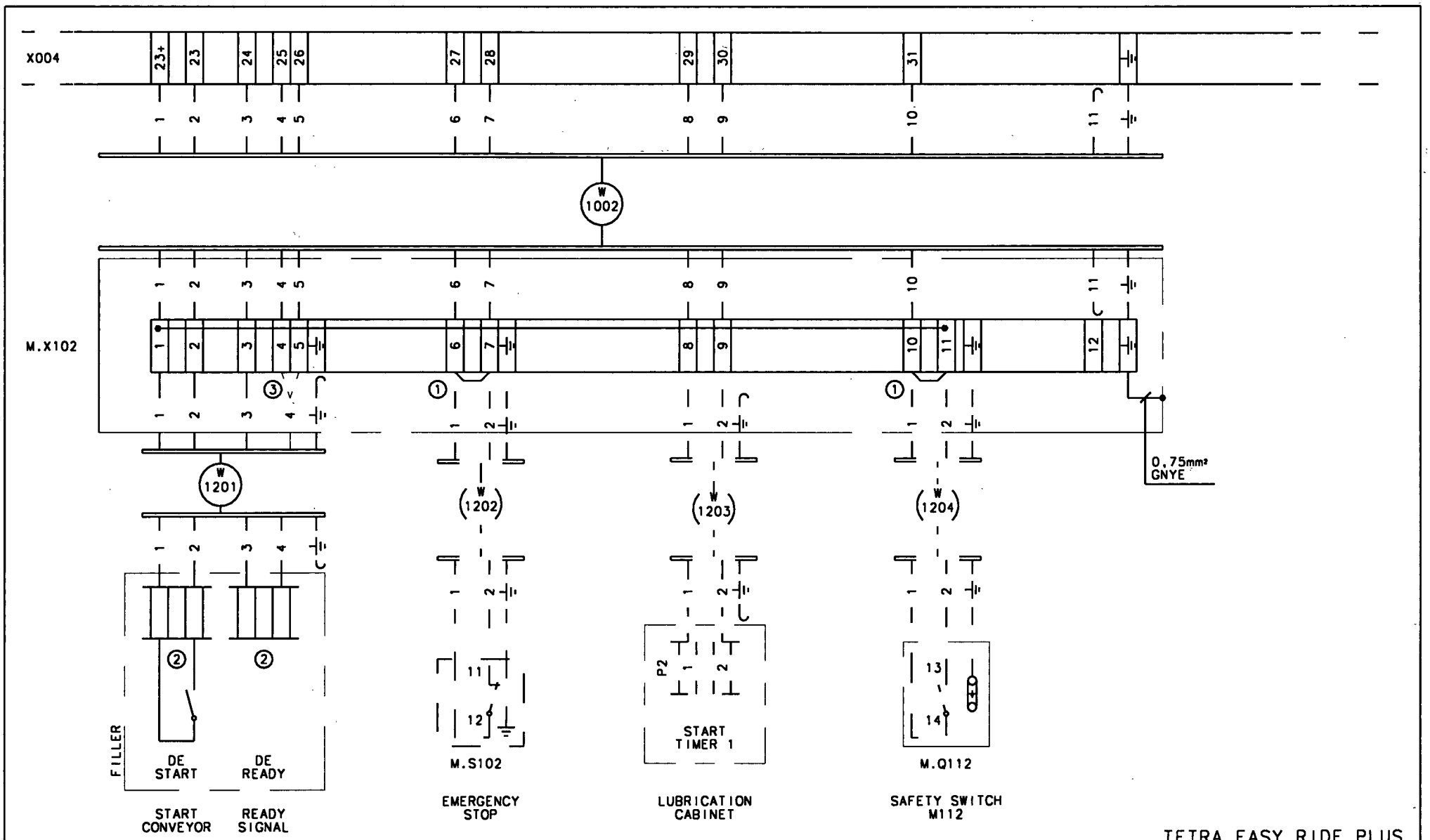

TETRA EASY RIDE PLUS

Note	AA				① REMOVE IF EQUIPMENT IS TO BE CONNECTED	Tetra Pak	Designer PNO	Date 010101	Approved	Date	Doc. class –
ECO No.	85617				② FOR CONNECTION SEE IN MANUAL FOR FILLER		Machine SEE ABOVE	Denomination CONNECTION DIAGRAM			
Sign./Date	AMM/010101				③ CONNECT M.X102:4/5, DEPENDENT ON FILLER	Company Tetra Brik PS AB		Drawing No 62118-0024			Page –
Appr./Date					Drawing remarks						

This drawing must not without the consent of Tetra Pak:
be copied, transmitted or disclosed to any third party.

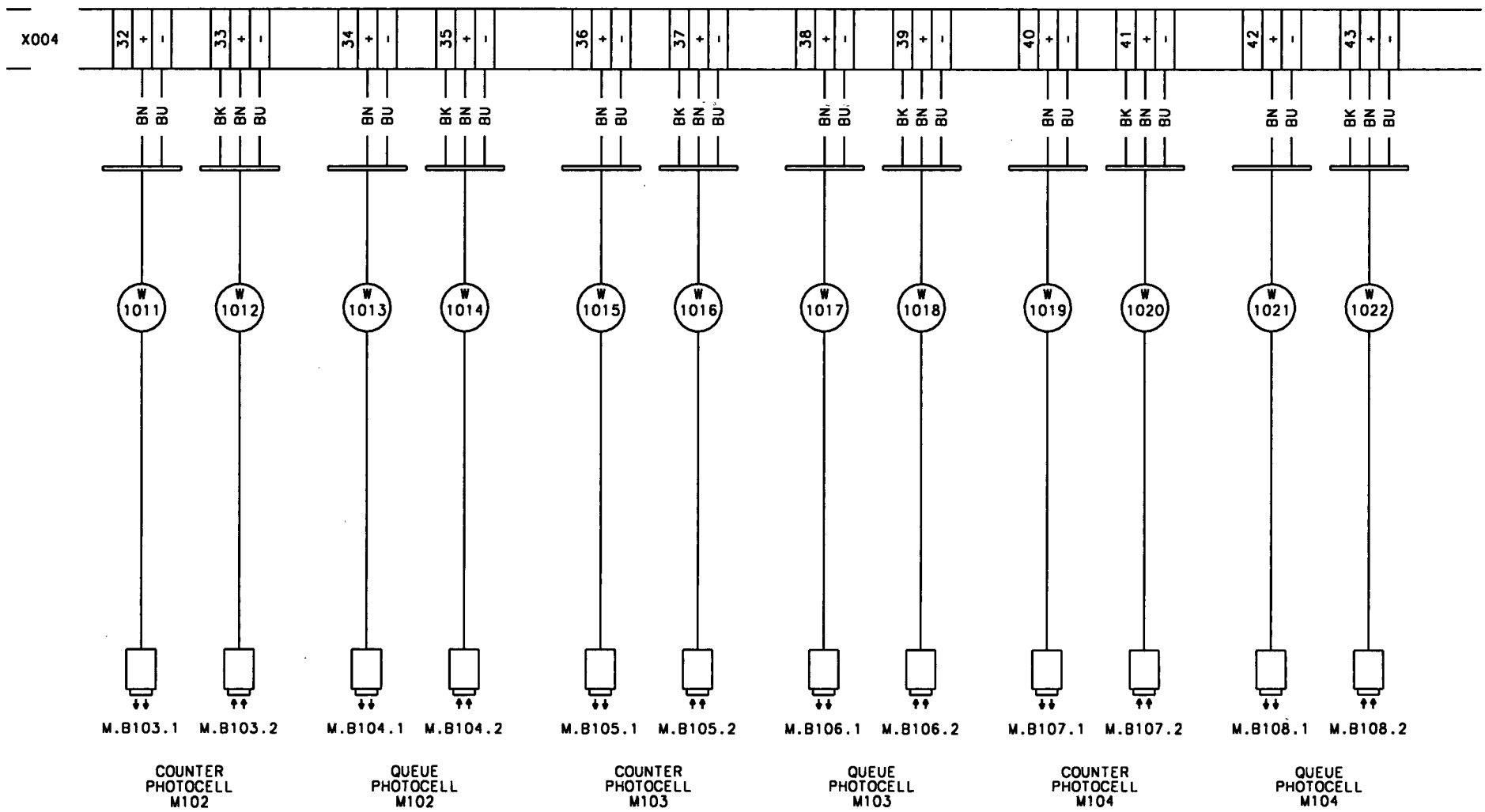

TETRA EASY RIDE PLUS

Note	AA					Tetra Pak	Designer PNO	Date 010101	Approved	Date	Doc. class –
ECN No.	85617						Machine SEE ABOVE	Denomination CONNECTION DIAGRAM		
Sign./Date	AMM/010101					Company Tetra Brik PS AB		Drawing No 62118-0025		Page –
Appr./Date					Drawing remarks					

This drawing must not without the consent of Tetra Pak:
be copied, transmitted or disclosed to any third party.

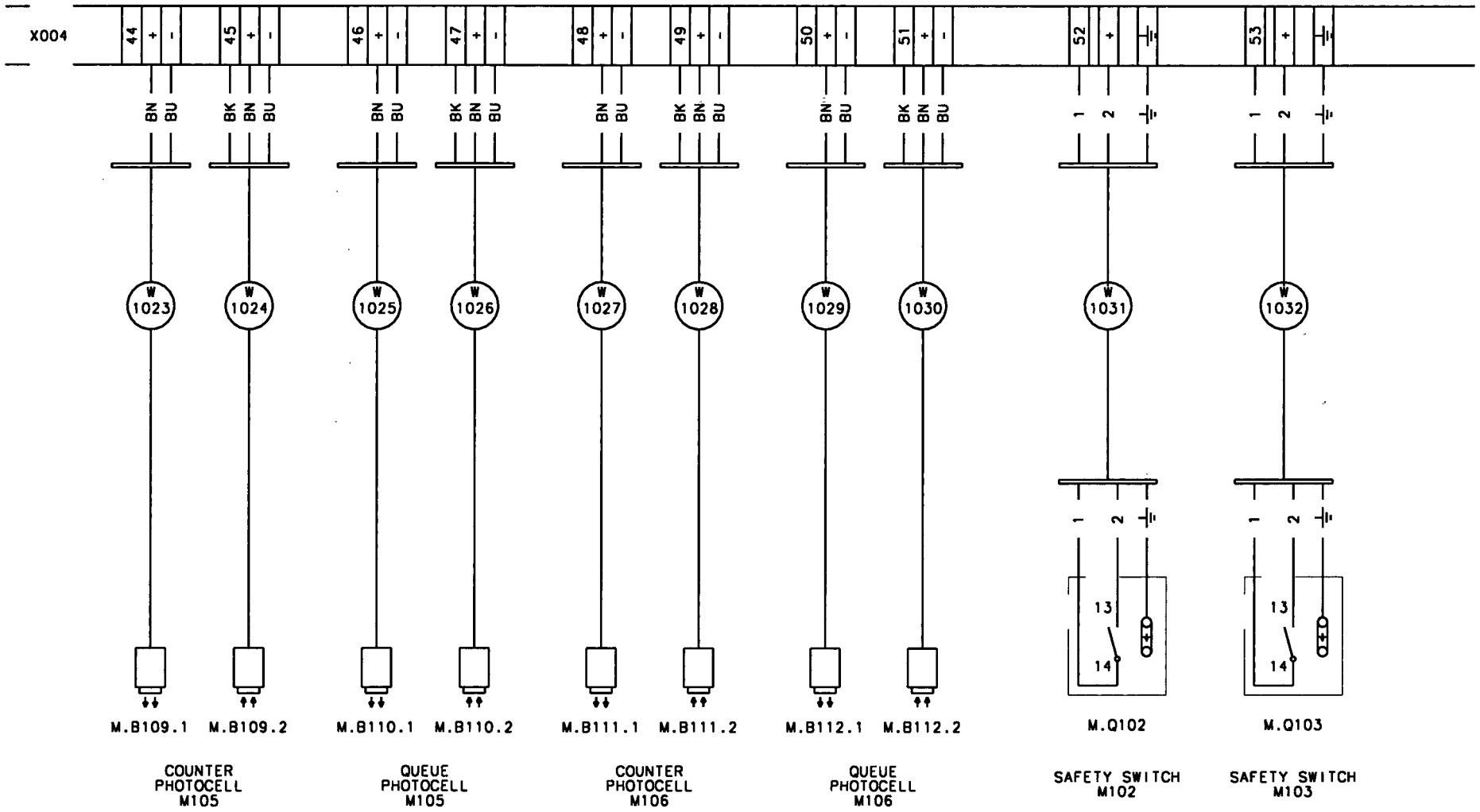

TETRA EASY RIDE PLUS

Note	AA					Tetra Pak	Designer PNO	Date 010101	Approved	Date	Doc. class –
ECN No.	85617						Machine SEE ABOVE	Denomination CONNECTION DIAGRAM		
Sign./Date	AMM/010101					Company Tetra Brik PS AB		Drawing No 62118-0026		Page –
Appr./Date					Drawing remarks					

This drawing must not without the consent of Tetra Pak:
be copied, transmitted or disclosed to any third party.

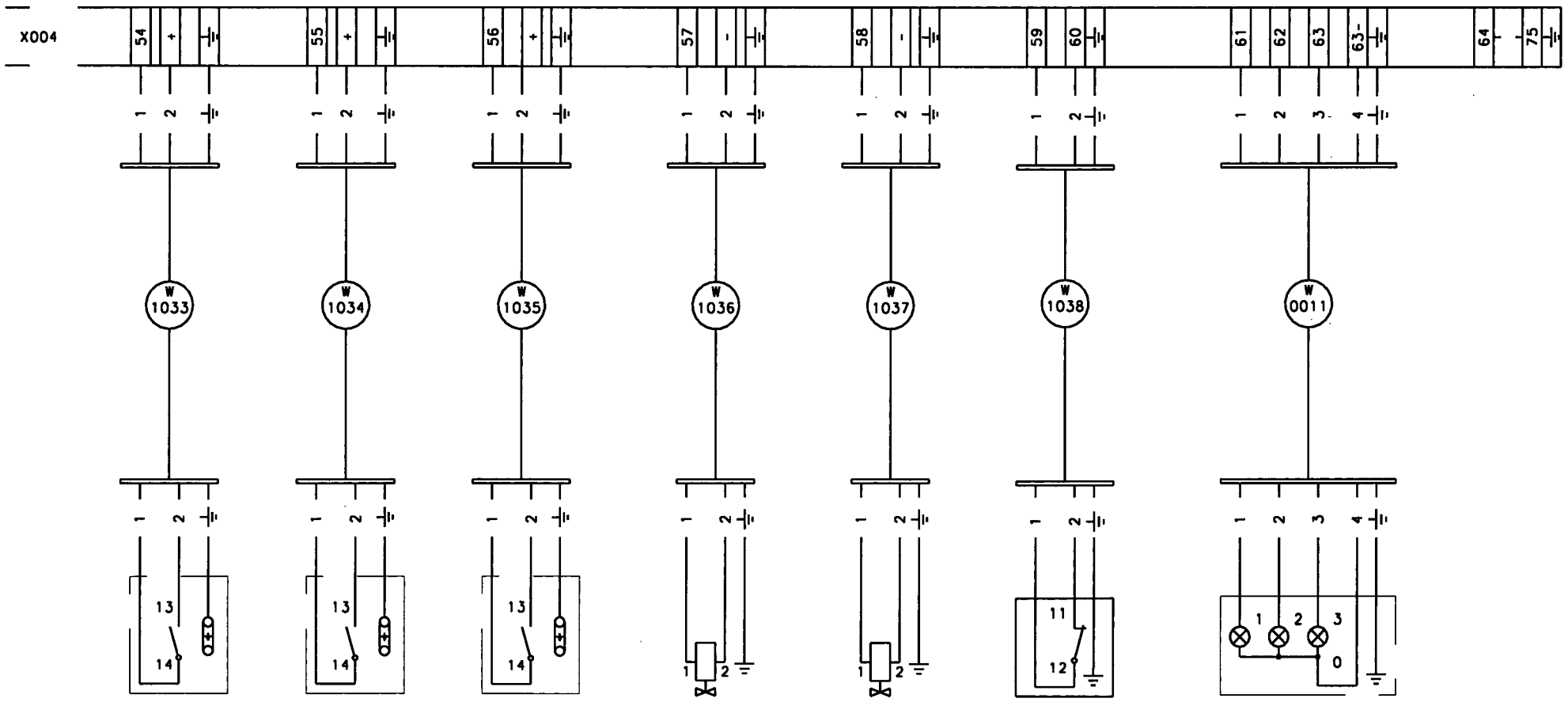

TETRA EASY RIDE PLUS

Note	AA					Tetra Pak	Designer PNO	Date 010101	Approved	Date	Doc. class –
ECN No.	85617						Machine SEE ABOVE	Denomination CONNECTION DIAGRAM		
Sign./Date	AMM/010101						Company Tetra Brik PS AB	Drawing No 62118-0027		Page –
Appr./Date						Drawing remarks				

This drawing must not without the consent of Tetra Pak:
be copied, transmitted or disclosed to any third party.

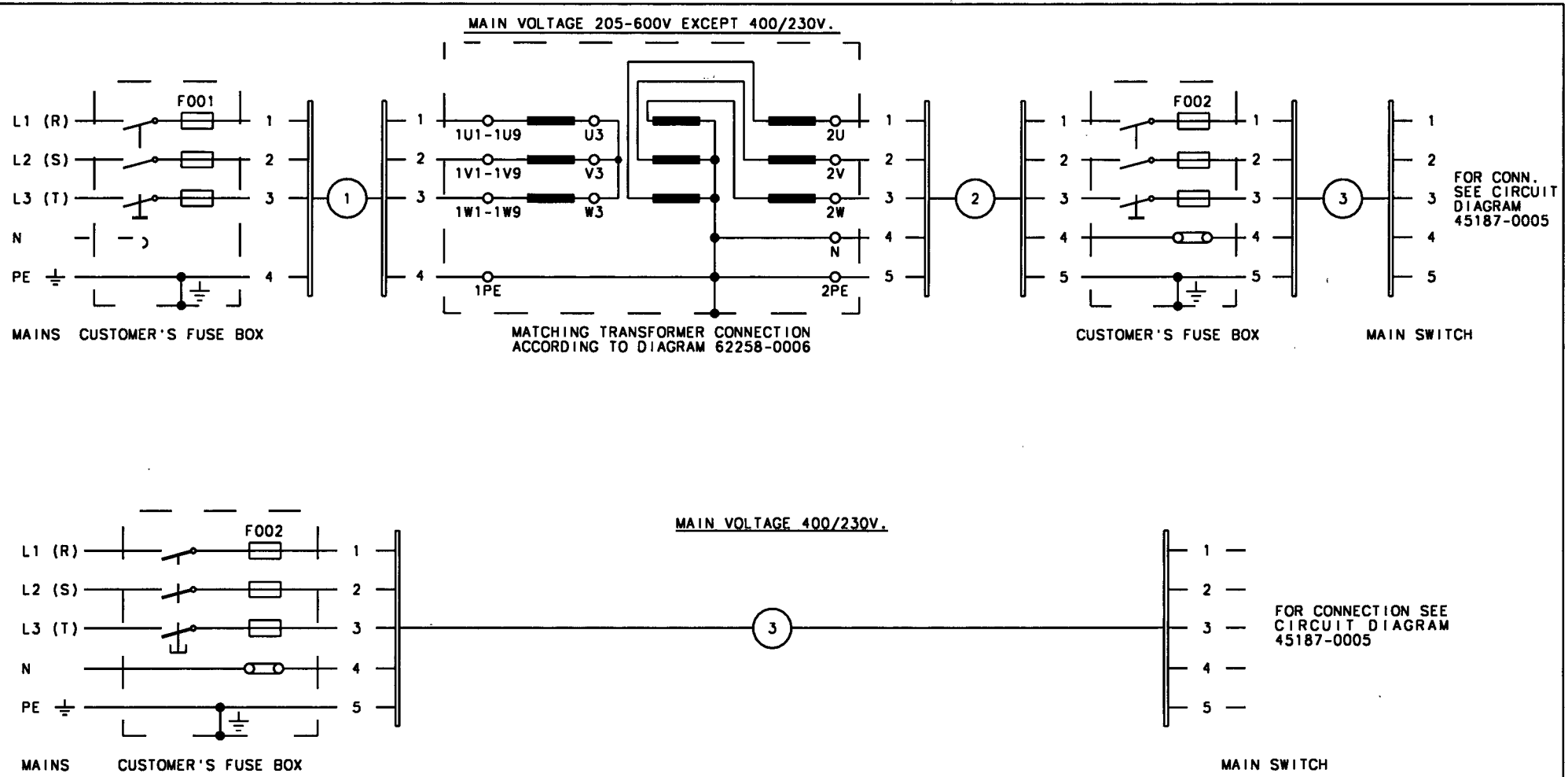

TETRA EASY RIDE PLUS

Note	AA				ATTENTION: PROTECTIVE BONDING TO BE	Tetra Pak	Designer PNO	Date 010101	Approved Date	Doc. class –
ECN No.	85617				CARRIED OUT ACCORDING TO LOCAL REGULATIONS		Machine SEE ABOVE	Denomination MAINS CONNECTION DIAGRAM		
Sign./Date	AMM/010101					Company Tetra Brik PS AB		Drawing No 62258-0005		Page –
Appr./Date					Drawing remarks					

This drawing must not without the consent of Tetra Pak: be copied, transmitted or disclosed to any third party.

MAIN VOLTAGE	FUSES (SLOW) ①F001	FUSES (SLOW) ①F002	AREA TO CU CABLES NO. 1	2	3	PRIMARY CONN.ON MATCHING TRANSFORMER MAINS	TAP	CONNECT	SECONDARY CONN. ON MATCHING TRANSFORMER
V	A	A	mm²	mm²	mm²				
600/347 3x600	25	10	3x2,5/2,5	4x4/4	4x2,5/2,5	L1 L2 L3 N PE	1U9 1V9 1W9 N ⏚	1U3 - U4 1V3 - V4 1W3 - W4	PHASE L1 2U PHASE L2 2V PHASE L3 2W NEUTRAL N EARTH 2PE
550/318 3x550	25	10	3x2,5/2,5	4x4/4	4x2,5/2,5	L1 L2 L3 N PE	1U8 1V8 1W8 N ⏚	1U3 - U4 1V3 - V4 1W3 - W4	
500/289 3x500	25	10	3x2,5/2,5	4x4/4	4x2,5/2,5	L1 L2 L3 N PE	1U7 1V7 1W7 N ⏚	1U3 - U4 1V3 - V4 1W3 - W4	
480/277 3x480	25	10	3x2,5/2,5	4x4/4	4x2,5/2,5	L1 L2 L3 N PE	1U6 1V6 1W6 N ⏚	1U3 - U4 1V3 - V4 1W3 - W4	
440/254 3x440	25	10	3x4/4	4x4/4	4x2,5/2,5	L1 L2 L3 N PE	1U5 1V5 1W5 N ⏚	1U2 - U4 1V2 - V4 1W2 - W4	
415/240 3x415	25	10	3x4/4	4x4/4	4x2,5/2,5	L1 L2 L3 N PE	1U5 1V5 1W5 N ⏚	1U1 - U4 1V1 - V4 1W1 - W4	
400x230 (380X220)		10			4x2,5/2,5	L1 L2 L3 N PE	1U4 1V4 1W4 N ⏚		
240/140 3x240	63	10	3x10/10	4x4/4	4x2,5/2,5	L1 L2 L3 N PE	1U3 1V3 1W3 N ⏚	U3 - U4 1U3-1U6 V3 - V4 1V3-1V6 W3 - W4 1W3-1W6	
220/127 3x220	63	10	3x10/10	4x4/4	4x2,5/2,5	L1 L2 L3 N PE	1U2 1V2 1W2 N ⏚	1U2-1U5 U3 - U4 1V2-1V5 V3 - V4 1W2-1W5 W3 - W4	
200/115 3x200	63	10	3x10/10	4x4/4	4x2,5/2,5	L1 L2 L3 N PE	1U1 1V1 1W1 N ⏚	1U1-1U4 U3 - U4 1V1-1V4 V3 - V4 1W1-1W4 W3 - W4	

MATCHING TRANSFORMER
90245-0022

Y/Z II-WIRED

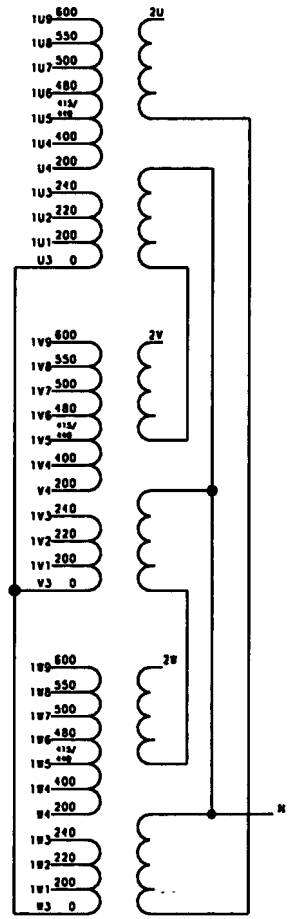

TETRA EASY RIDE PLUS

Note	AA					①RECOMMENDED MAINS FUSE TO ACHIEVE SELECTIVITY	Tetra Pak	Designer PNO	Date 010101	Approved Date	Doc. class –
ECN No.	85617							Machine SEE ABOVE	Denomination MAINS CONNECTION DIAGRAM	
Sign./Date	AMM/010101						Company Tetra Brik PS AB	Drawing No 62258-0006		Page –
Appr./Date						Drawing remarks				

This drawing must not without the consent of Tetra Pak:
be copied, transmitted or disclosed to any third party.

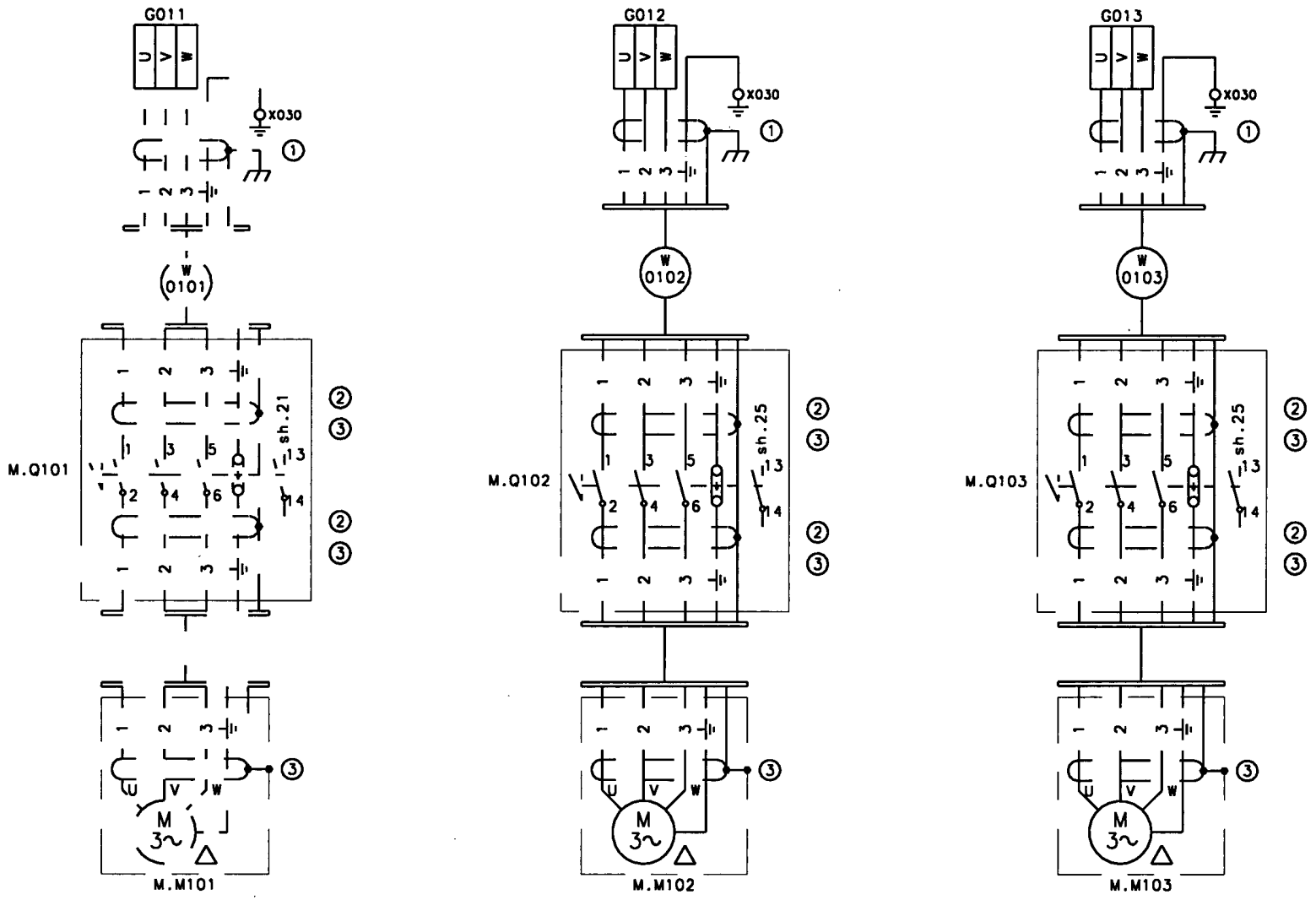

TETRA EASY RIDE PLUS

Note	AA				① SCREEN CONNECTED TO EMC-CLAMP	Tetra Pak	Designer PNO	Date 010101	Approved	Date	Doc. class –
ECN No.	85617				② CABELGLAND CONNECTED TO EMC-PLATE		Machine SEE ABOVE	Denomination CONNECTION DIAGRAM		
Sign./Date	AMM/010101				③ SCREEN CONNECTED TO EMC-CABLEGLAND		Company Tetra Brik PS AB	Drawing No 62258-0010		Page –
Appr./Date					Drawing remarks					

This drawing must not without the consent of Tetra Pak:
be copied, transmitted or disclosed to any third party.

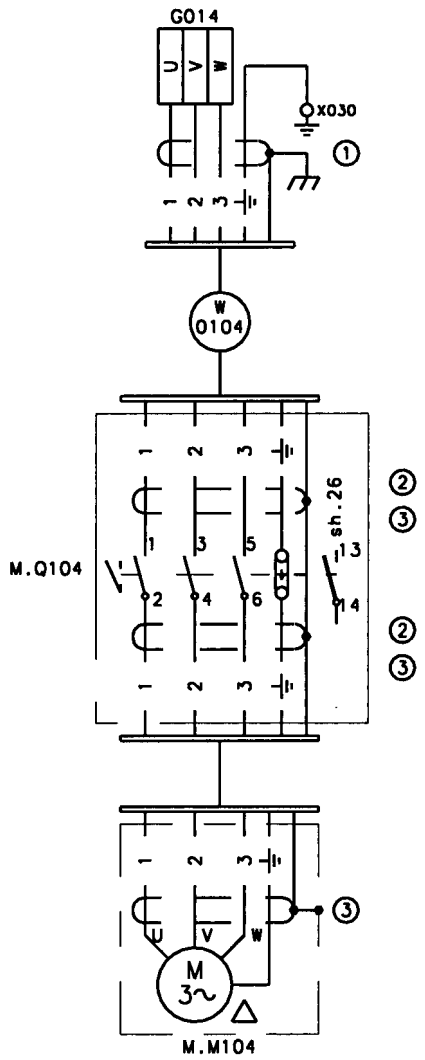

CONVEYOR 104

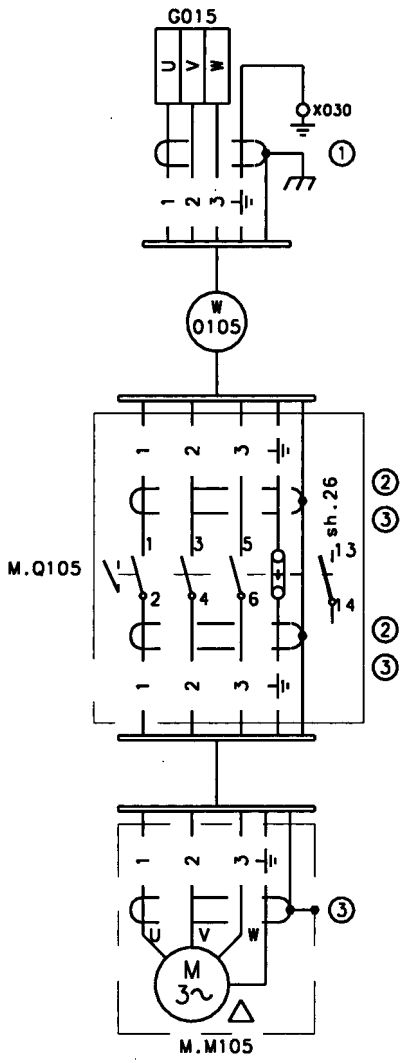

CONVEYOR 105

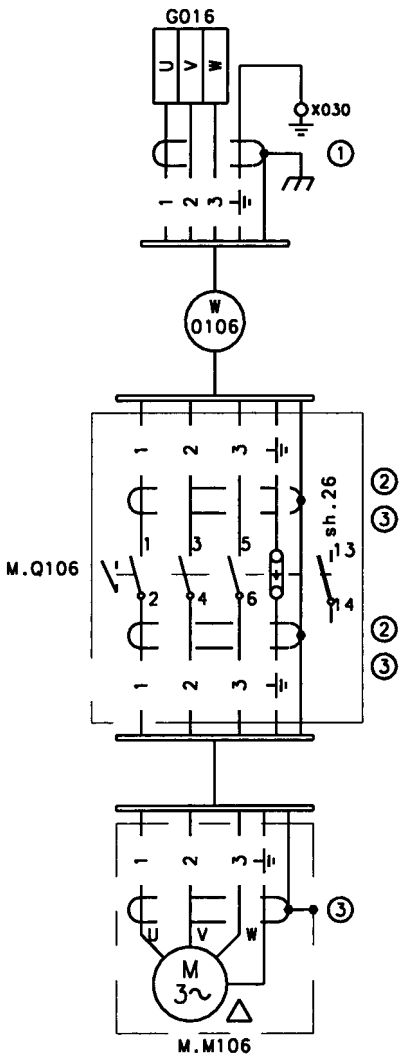

CONVEYOR 106

TETRA EASY RIDE PLUS

Note	AA				① SCREEN CONNECTED TO EMC-CLAMP	Tetra Pak	Designer PNO	Date 010101	Approved	Date	Doc. class –
ECN No.	85617				② CABELGLAND CONNECTED TO EMC-PLATE		Machine SEE ABOVE	Denomination CONNECTION DIAGRAM		
Sign./Date	AMM/010101				③ SCREEN CONNECTED TO EMC-CABLEGLAND		Company Tetra Brik PS AB	Drawing No 62258-0011		Page –
Appr./Date					Drawing remarks					

This drawing must not without the consent of Tetra Pak:
be copied, transmitted or disclosed to any third party.

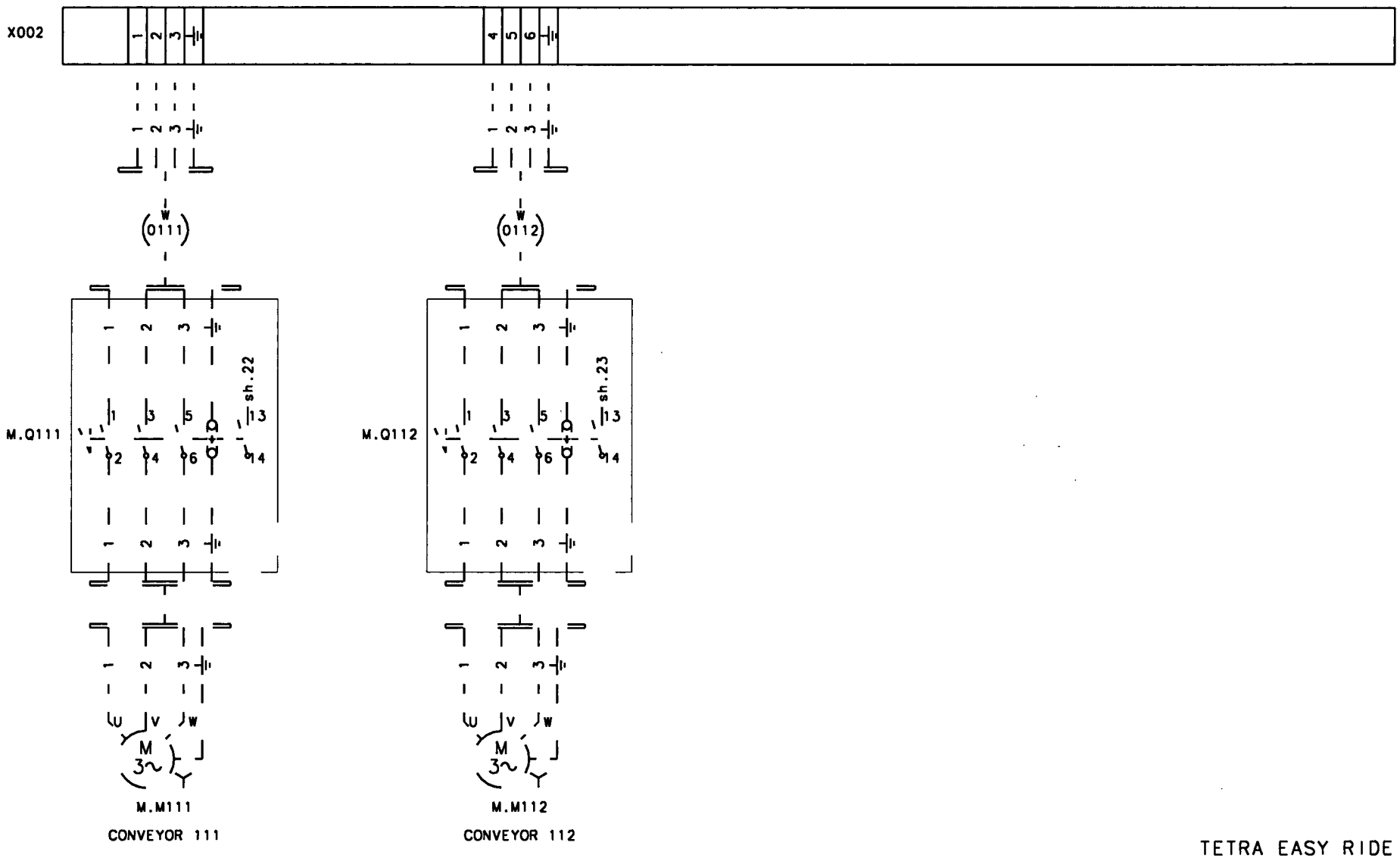

TETRA EASY RIDE PLUS

Note	AA					Tetra Pak	Designer PNO	Date 010101	Approved	Date	Doc. class –
ECN No.	85617						Machine SEE ABOVE	Denomination CONNECTION DIAGRAM			
Sign./Date	AMM/010101					Company Tetra Brik PS AB		Drawing No 62258-0012			Page –
Appr./Date						Drawing remarks					

This drawing must not without the consent of Tetra Pak: be copied, transmitted or disclosed to any third party.

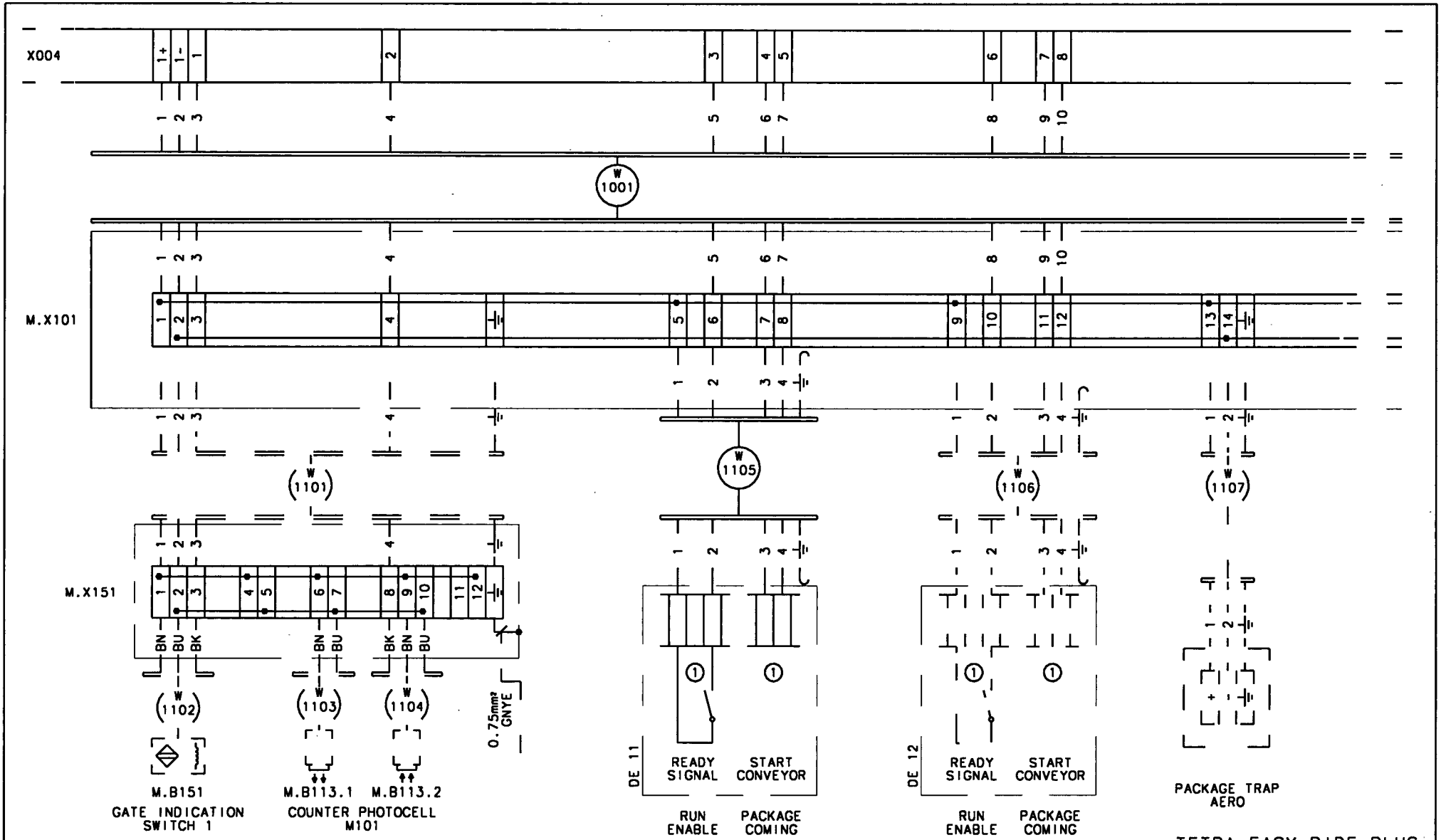

TETRA EASY RIDE PLUS

Note	AA				① FOR CONNECTION SEE IN MACHINE MANUAL	Tetra Pak	Designer PNO	Date 010101	Approved	Date	Doc. class –
ECN No.	85617						Machine SEE ABOVE	Denomination CONNECTION DIAGRAM		
Sign./Date	AMM/010101						Company Tetra Brik PS AB	Drawing No 62258-0020		Page –
Appr./Date					Drawing remarks					

This drawing must not without the consent of Tetra Pak:
be copied, transmitted or disclosed to any third party.

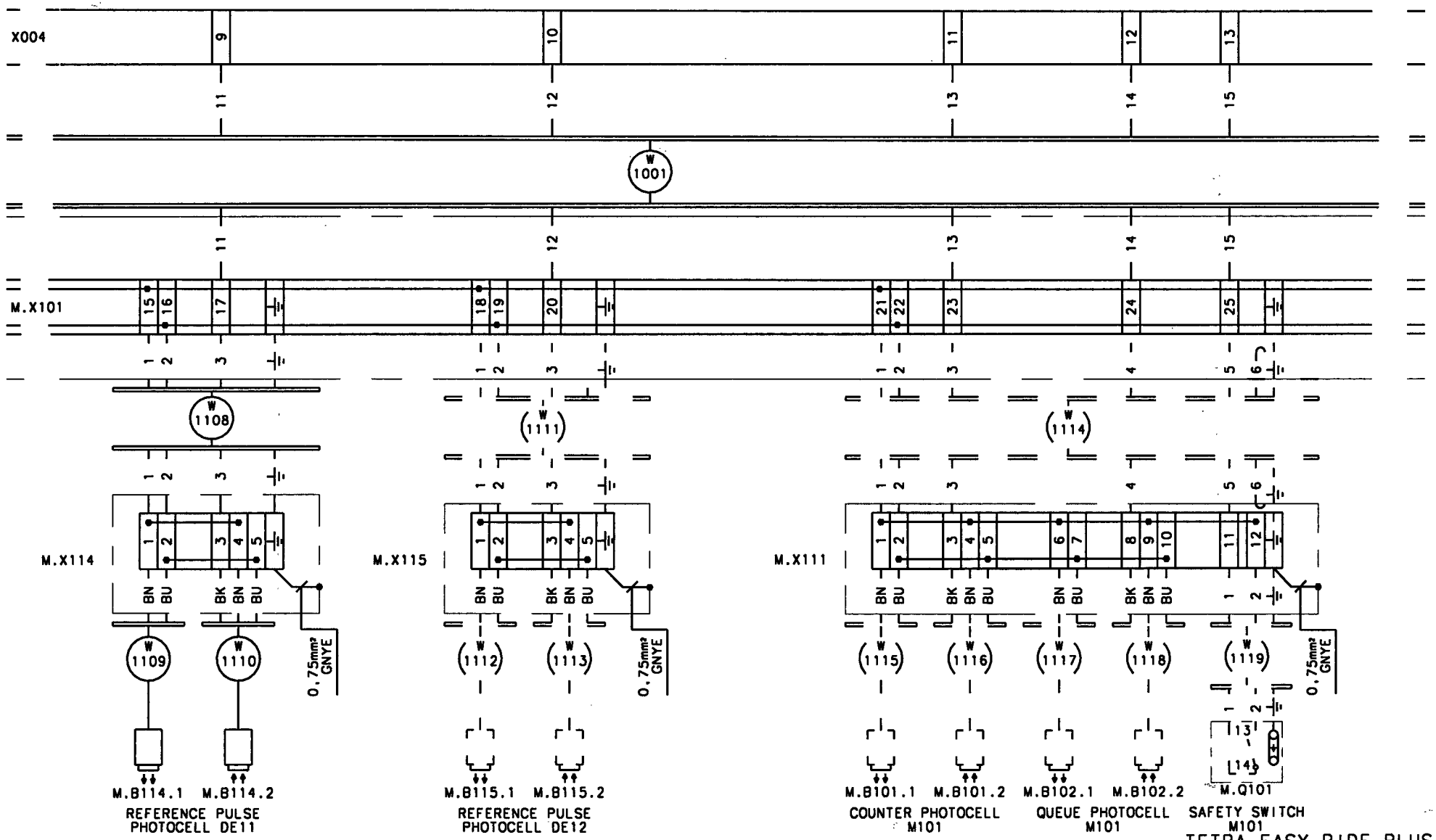

TETRA EASY RIDE PLUS

Note	AA	AB				Tetra Pak	Designer PNO	Date 010101	Approved	Date	Doc. class –
ECN No.	85617	102364					Machine SEE ABOVE	Denomination CONNECTION DIAGRAM		
Sign./Date	AMM/010101	AMM/011115								
Appr./Date					Drawing remarks	Company Tetra Brik PS AB		Drawing No 62258-0021		Page –

This drawing must not without the consent of Tetra Pak:
be copied, transmitted or disclosed to any third party.

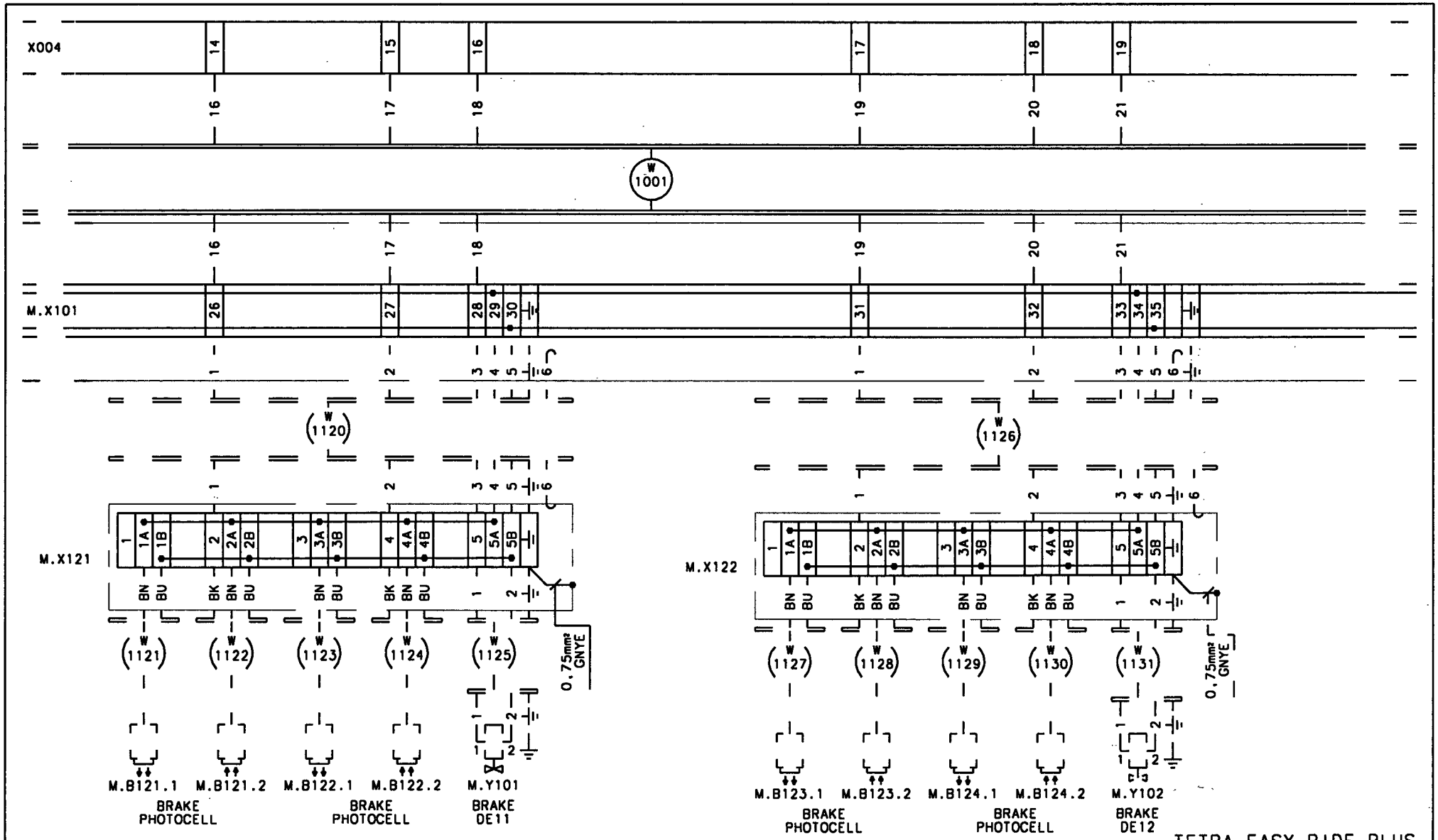

TETRA EASY RIDE PLUS

Note	AA	AB				Tetra Pak	Designer PNO	Date 010101	Approved	Date	Doc. class –
ECN No.	85617	102364					Machine SEE ABOVE	Denomination CONNECTION DIAGRAM		
Sign./Date	AMM/010101	AMM/011115								
Appr./Date					Drawing remarks	Company Tetra Brik PS AB		Drawing No 62258-0022		Page –

This drawing must not without the consent of Tetra Pak:
be copied, transmitted or disclosed to any third party.

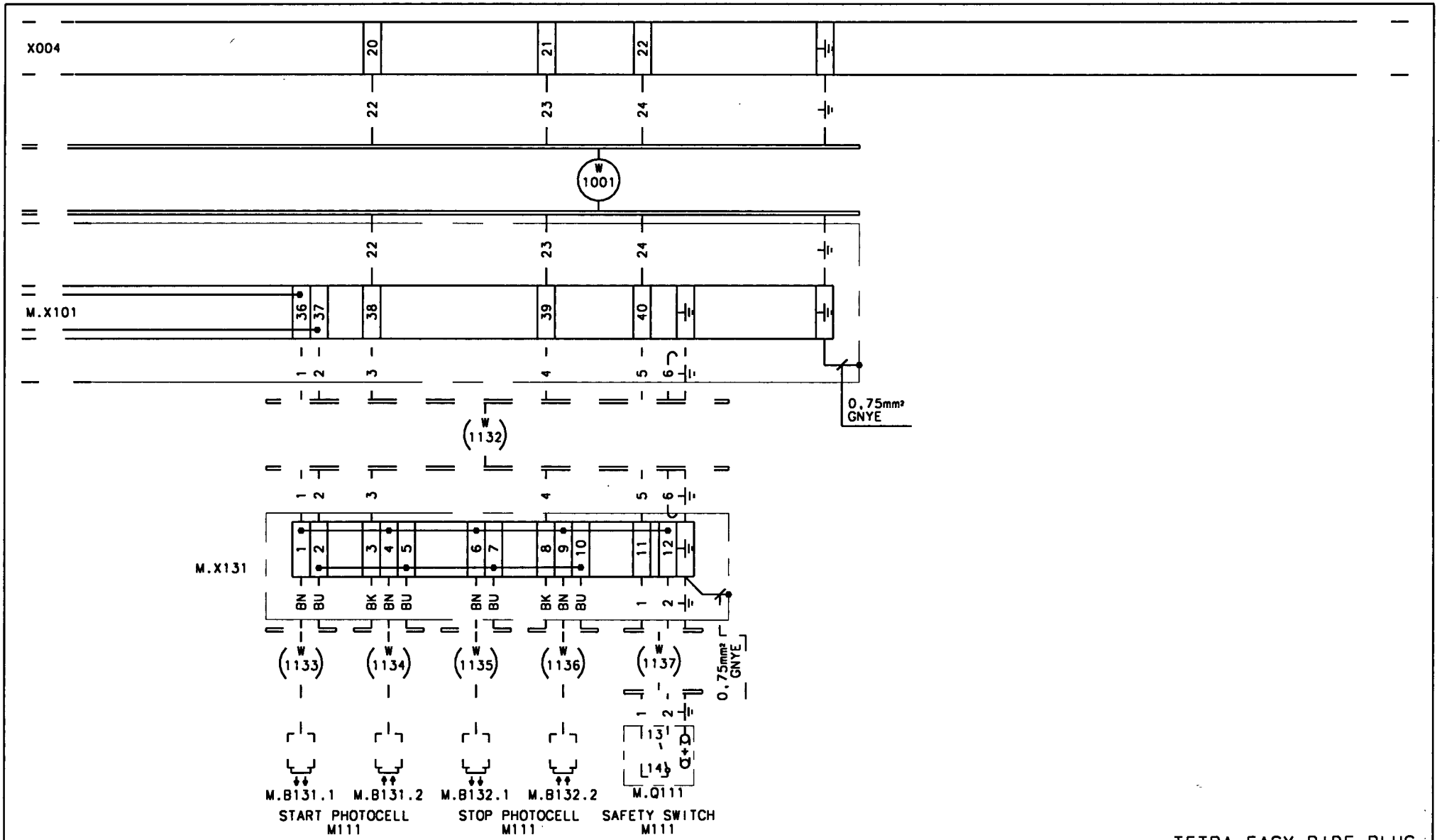

TETRA EASY RIDE PLUS

Note	AA					Tetra Pak	Designer PNO	Date 010101	Approved	Date	Doc. class –
ECN No.	85617						Machine SEE ABOVE	Denomination CONNECTION DIAGRAM		
Sign./Date	AMM/010101					Company Tetra Brik PS AB		Drawing No 62258-0023		Page –
Appr./Date					Drawing remarks					

This drawing must not without the consent of Tetra Pak:
be copied, transmitted or disclosed to any third party.

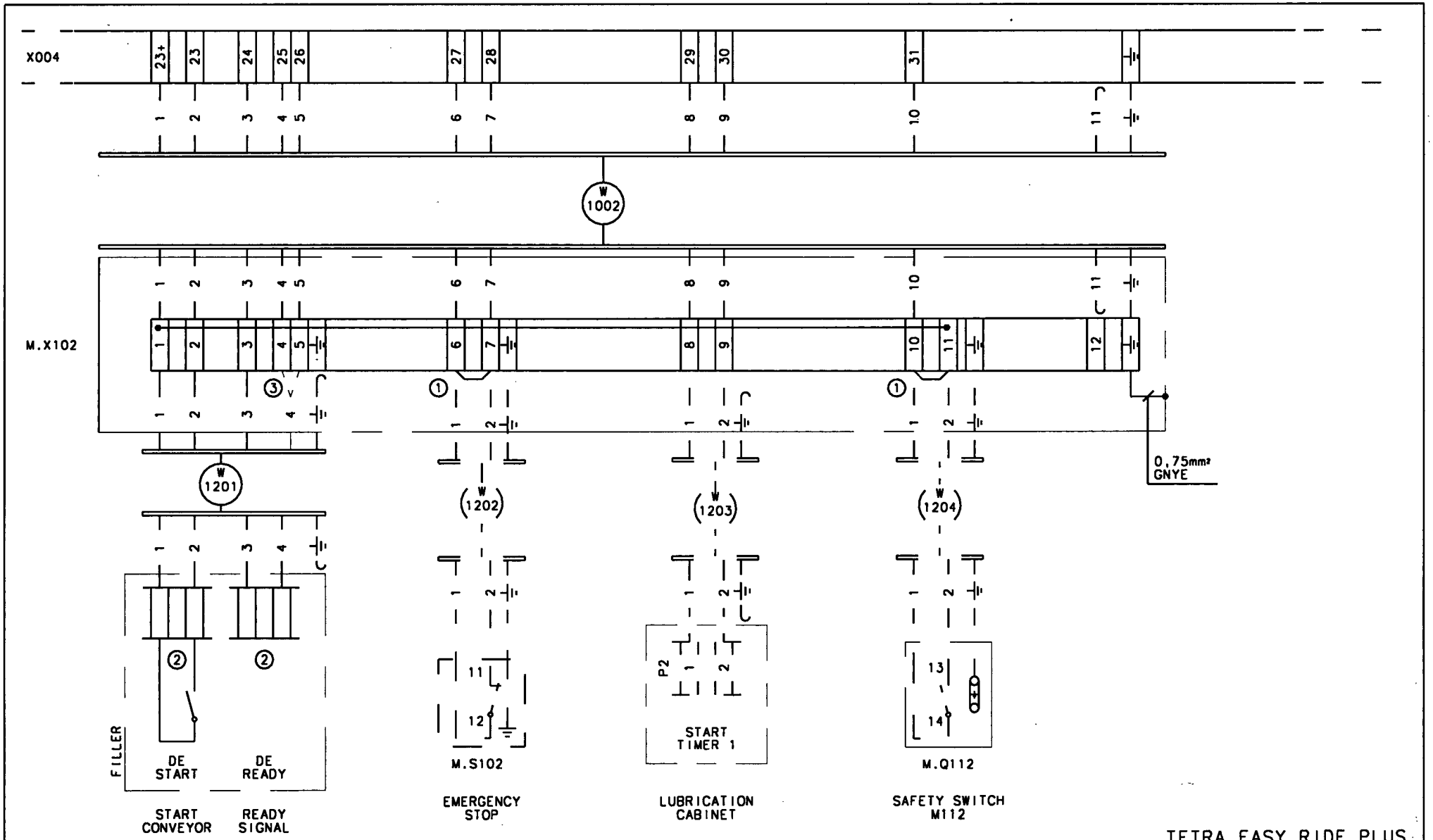

TETRA EASY RIDE PLUS

Note	AA				① REMOVE IF EQUIPMENT IS TO BE CONNECTED	Tetra Pak	Designer PNO	Date 010101	Approved	Date	Doc. class –
ECN No.	85617				② FOR CONNECTION SEE IN MANUAL FOR FILLER		Machine SEE ABOVE	Denomination CONNECTION DIAGRAM			
Sign./Date	AMM/010101				③ CONNECT M.X102:4/5, DEPENDENT ON FILLER	Company Tetra Brik PS AB		Drawing No 62258-0024			Page –
Appr./Date					Drawing remarks						

This drawing must not without the consent of Tetra Pak:
be copied, transmitted or disclosed to any third party.

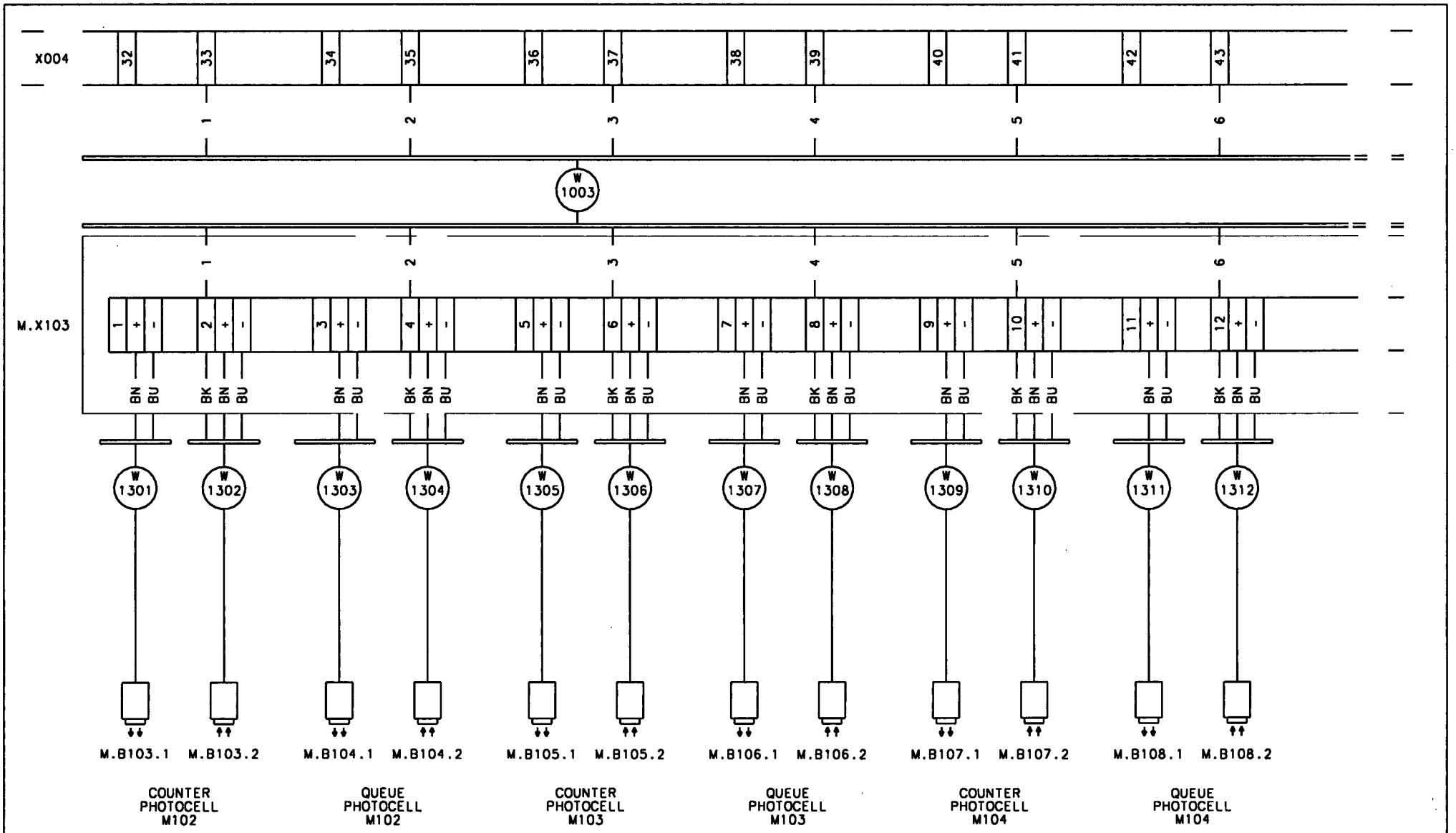

TETRA EASY RIDE PLUS

Note	AA					Tetra Pak	Designer PNO	Date 010101	Approved	Date	Doc. class –
ECN No.	85617						Machine SEE ABOVE	Denomination CONNECTION DIAGRAM		
Sign./Date	AMM/010101									
Appr./Date					Drawing remarks	Company Tetra Brik PS AB		Drawing No 62258-0025		Page –

This drawing must not without the consent of Tetra Pak: be copied, transmitted or disclosed to any third party.

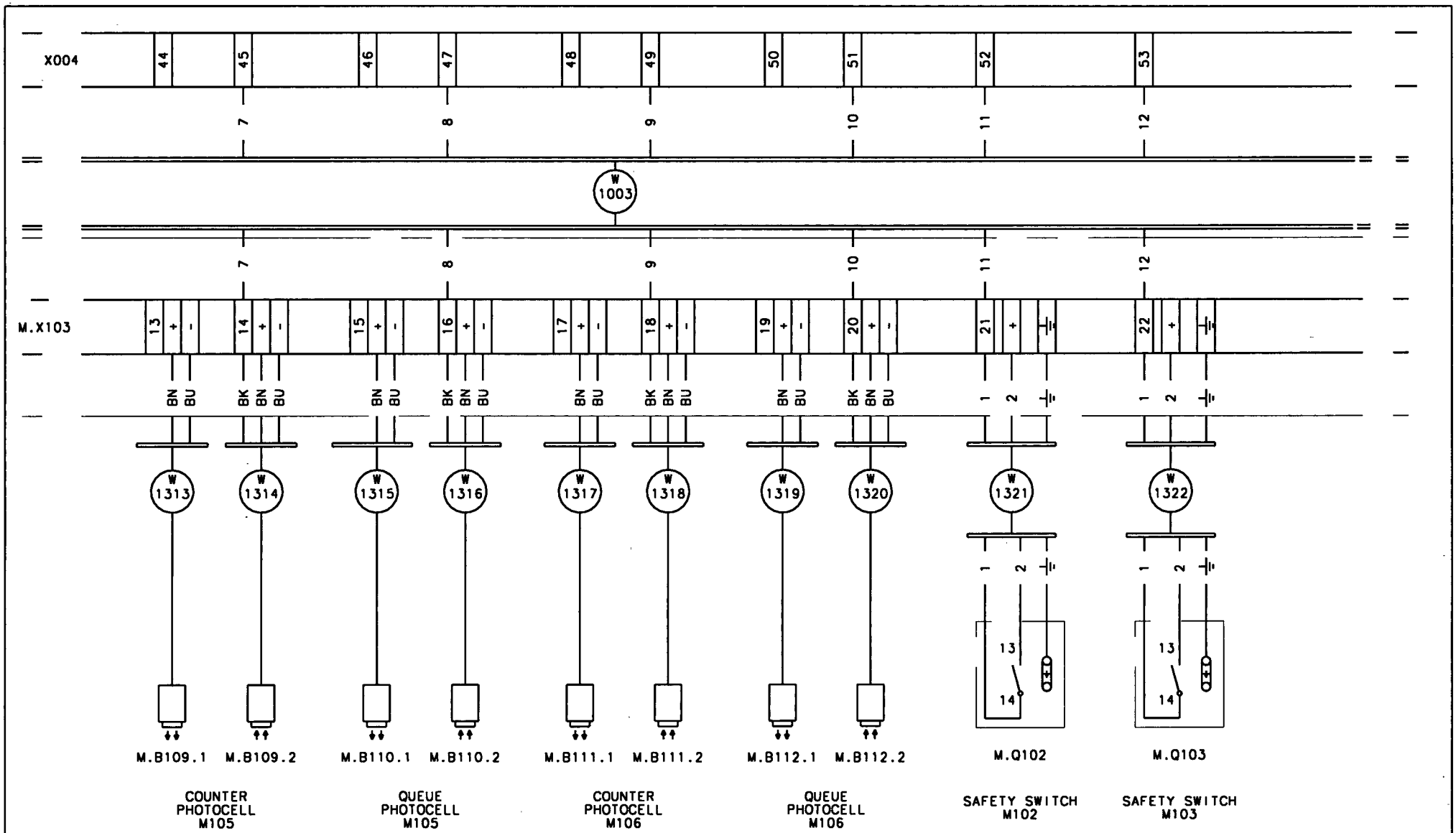

TETRA EASY RIDE PLUS

Note	AA					Tetra Pak	Designer PNO	Date 010101	Approved	Date	Doc. class –
ECN No.	85617						Machine SEE ABOVE	Denomination CONNECTION DIAGRAM			
Sign./Date	AMM/010101					Company Tetra Brik PS AB		Drawing No 62258-0026			Page –
Appr./Date					Drawing remarks						

This drawing must not without the consent of Tetra Pak: be copied, transmitted or disclosed to any third party.

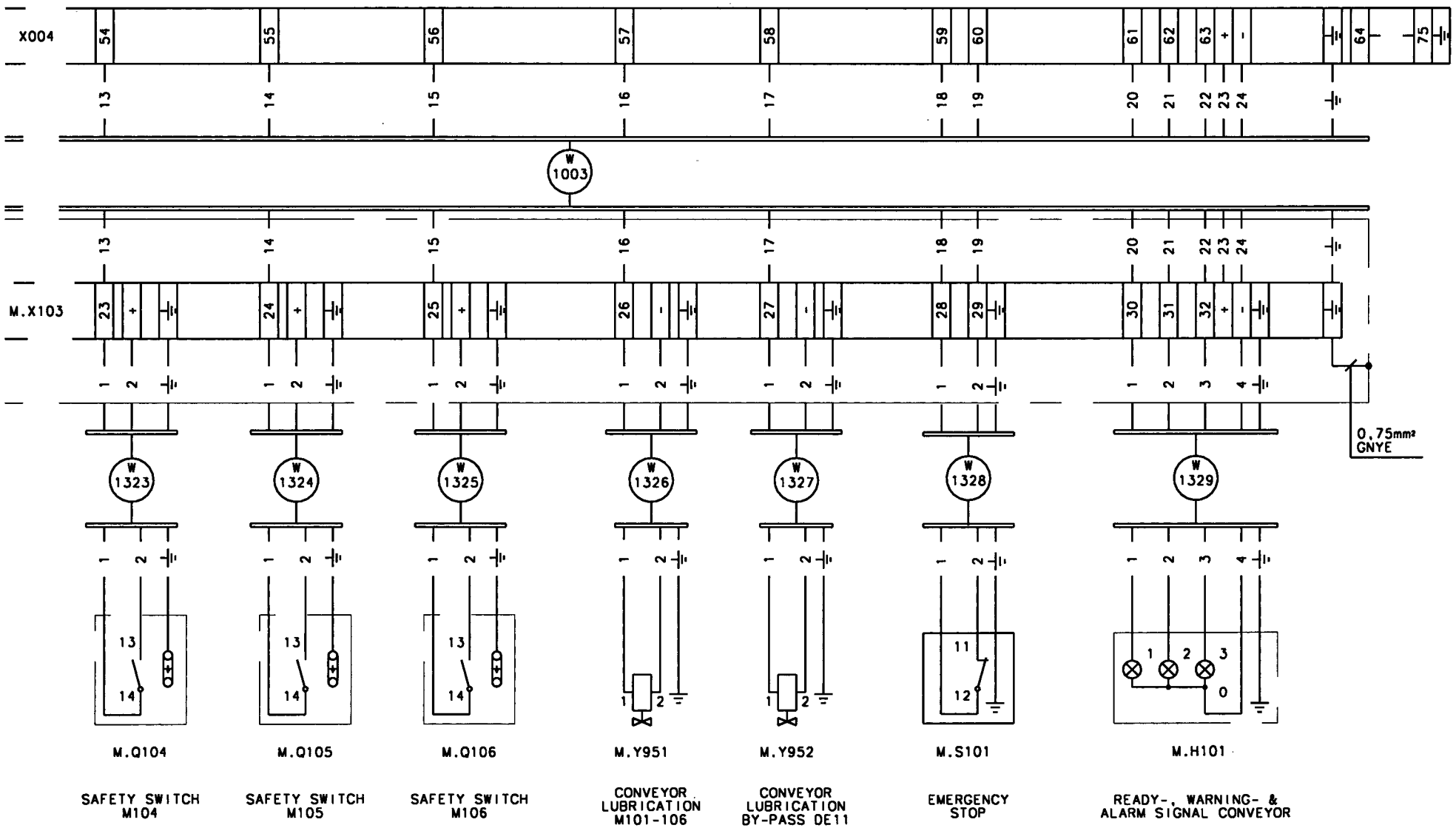

TETRA EASY RIDE PLUS

Note	AA					Tetra Pak	Designer PNO	Date 010101	Approved Date	Doc. class –
ECN No.	85617						Machine SEE ABOVE	Denomination CONNECTION DIAGRAM		
Sign./Date	AMM/010101									
Appr./Date					Drawing remarks	Company Tetra Brik PS AB		Drawing No 62258-0027		Page –

12 Program documents

2.2TH601382en.fm

12 Program documents

Note! For table of contents, see chapter 7 (Table of contents for electrical documents).

2.2TH601382en.fm

```
[  START OF LD  PROGRAM A398501  ]       (* TETRA EASY RIDE PLUS            *)
[     VARIABLE DECLARATIONS      ]
[       BLOCK DECLARATIONS       ]

       SUBR  1 [CUSTSET]       LANG: LD  (* Custom setting                 *)

       SUBR  2 [ADVSET ]       LANG: LD  (* Advanc. setting                *)

       SUBR  3 [COMMON ]       LANG: LD  (* Common                         *)

       SUBR  4 [ LINE  ]       LANG: LD  (* Conv. line                     *)

       SUBR  5 [ GREEN ]       LANG: LD  (* Green lamp                     *)

       SUBR  6 [  EXT  ]       LANG: LD  (* External communication         *)

       SUBR  7 [ALARM  ]       LANG: LD  (* Alarms                         *)

       SUBR  8 [CHAIN  ]       LANG: LD  (* Chain lubric.                  *)

       SUBR  9 [BRAKE  ]       LANG: LD  (* Brakes                         *)

       SUBR 11 [ PLMS  ]       LANG: LD  (* PLMS                           *)

[     START OF PROGRAM LOGIC     ]

 (*************************************************************************)
 (*                                                                       *)
 (* TETRA EASY RIDE PLUS                                                  *)
 (* 39850-0001 ELD 001 AA 011025 ROL ECM:85617                            *)
 (*                                                                       *)
 (* rung 005 Customer settings                                            *)
 (* rung 006 Advanced settings                                            *)
 (* rung 007 Common                                                       *)
 (* rung 008 Conveyor line                                                *)
 (* rung 009 Green lamp                                                   *)
 (* rung 010 Short stop signals                                           *)
 (* rung 011 Alarms                                                       *)
 (* rung 012 Chain lubrication                                            *)
 (* rung 013 Brakes                                                       *)
 (* rung 014 Signals to DE                                                *)
 (* rung 015 PLMS                                                         *)
 (*                                                                       *)
 (* >>>>>>>>>>>>>>>>>>>>>>>>>>>>>>>>>>>>>>>>>>>>>>>>>>>>>>>>>>>>>>>>>>>>> *)
 (* >                                                                   > *)
 (* >                        PLC ID 8000                                > *)
 (* >                                                                   > *)
 (* >>>>>>>>>>>>>>>>>>>>>>>>>>>>>>>>>>>>>>>>>>>>>>>>>>>>>>>>>>>>>>>>>>>>> *)
 (*                                                                       *)
 (*************************************************************************)

                Custom                                          << RUNG 5  STEP #0002 >>
ALW ON          setting
%S0007
-| |-[ CALL CUSTSET ]
      [ (SUBROUTINE) ]

                Advanc.                                         << RUNG 6  STEP #0004 >>
ALW ON          setting
%S0007
-| |-[ CALL ADVSET  ]
      [ (SUBROUTINE) ]

ALW ON          Common                                          << RUNG 7  STEP #0006 >>
%S0007
-| |-[ CALL COMMON  ]
      [ (SUBROUTINE) ]
```

```
                Conv.
ALW_ON          line                                    << RUNG 8  STEP #0008 >>
%S0007
-| |-  CALL  LINE
      (SUBROUTINE)

                Green
ALW_ON          lamp                                    << RUNG 9  STEP #0010 >>
%S0007
-| |-  CALL  GREEN
      (SUBROUTINE)

                Externa
                l
                communi
ALW_ON          cation                                  << RUNG 10  STEP #0012 >>
%S0007
-| |-  CALL   EXT
      (SUBROUTINE)

ALW_ON          Alarms                                  << RUNG 11  STEP #0014 >>
%S0007
-| |-  CALL  ALARM
      (SUBROUTINE)

                Chain
ALW_ON          lubric.                                 << RUNG 12  STEP #0016 >>
%S0007
-| |-  CALL  CHAIN
      (SUBROUTINE)

ALW_ON          Brakes                                  << RUNG 13  STEP #0018 >>
%S0007
-| |-  CALL  BRAKE
      (SUBROUTINE)

ALW_ON          PLMS                                    << RUNG 14  STEP #0020 >>
%S0007
-| |-  CALL  PLMS
      (SUBROUTINE)

[      END OF PROGRAM LOGIC      ]
```

```
[  START LD SUBROUTINE  CUSTSET  ]

[     VARIABLE DECLARATIONS      ]

[   START OF SUBROUTINE LOGIC    ]

 >>>>
```

```
>>>
```

```
>>>
```

```
[  START LD SUBROUTINE  ADVSET   ]

[     VARIABLE DECLARATIONS      ]

[   START OF SUBROUTINE LOGIC    ]

 >>>>
```

```
>>>
```

```
>>>
```

```
>>>
```

```
[  START LD SUBROUTINE  COMMON   ]

[     VARIABLE DECLARATIONS      ]

[   START OF SUBROUTINE LOGIC    ]

 >>>>
```

```
(*****************************************************************************)
(*                                                                           *)
(* START AND STOP SEQUENCE                                                   *)
(*                                                                           *)
(*****************************************************************************)

Slow                                                                << RUNG 5  STEP #0003 >>
flash

%M0001                                                   %M0001
 0006   TMR                                                (S)—   (* Slow flash *)
        0.01s                                                     Cross reference for %M0001
 CONST —PV                                                        -] [- 6,15
 +00050                                                           -]/[- 5
                                                                  -(R)  6

        Slow
        flash
        pause

        %R0001

Slow                                                                << RUNG 6  STEP #0006 >>
flash

%M0001                                                   %M0001
 0005   TMR                                                (R)—   (* Slow flash *)
        0.01s                                                     Cross reference for %M0001
 CONST —PV                                                        -] [- 6,15
 +00050                                                           -]/[- 5
                                                                  -(S)  5

        Slow
        flash
        pulse

        %R0004

Fast                                                                << RUNG 7  STEP #0009 >>
flash

%M0003                                                   %M0003
 0008   TMR                                                (S)—   (* Fast flash *)
        0.01s                                                     Cross reference for %M0003
 CONST —PV                                                        -] [- 8
 +00025                                                           -]/[- 7
                                                                  -(R)  8

        Fast
        flash
        pause

        %R0007

Fast                                                                << RUNG 8  STEP #0012 >>
flash

%M0003                                                   %M0003
 0007   TMR                                                (R)—   (* Fast flash *)
        0.01s                                                     Cross reference for %M0003
 CONST —PV                                                        -] [- 8
 +00025                                                           -]/[- 7
                                                                  -(S)  7

        Fast
        flash
        pulse

        %R0010

Step up                                                             << RUNG 9  STEP #0015 >>
 S20H
%I0003                                                   %T0003
                                                           (^)—   (* Step up *)
                                                                  Cross reference for %T0003
                                                                  -] [- 10,12

Step up Step 0                                                      << RUNG 10  STEP #0017 >>

%T0003  %M0100                                           %T0001
 0009    0013                                              (^)—   (* Step up if step 0 *)
                                                                  Cross reference for %T0001
                                                                  -] [- 14
```

```
Step
down
 S21H
%I0004                                                    %T0002
-| |-------------------------------------------------------(^)-  (* Step down *)
                                                                  Cross reference for %T0002
                                                                  -] [- 13

Step up                                                           << RUNG 12  STEP #0022 >>

%T0003                                                    %M0100
-| |-------------------------------------------------------(S)-  (* Step 0 *)
 0009                                                             Cross reference for %M0100
                                                                  -] [- 10,15,41,43
                                                                  -]/[- 16
                                                                  -(R)  13

Step                                                              << RUNG 13  STEP #0024 >>
down    Step 1

%T0002  %M0101                                            %M0100
-| |---|/|-----------------------------------------------(R)-  (* Step 0 *)
 0011    0014                                                     Cross reference for %M0100
                                                                  -] [- 10,15,41,43
                                                                  -]/[- 16
                                                                  -(S)  12

Step up                                                           << RUNG 14  STEP #0027 >>
if step Step    Alarm   Tripp.  Alarm   Tripp.  Alarm   Tripp.
0       down    em.stop em.stop overl.  overl.  conv.   conv.
         S21H                   trip    trip    switch  switch
%T0001  %I0004  %M0049  %M0086  %M0051  %M0087  %M0053  %M0088  %M0101
-| |---|/|-----|/|-----|/|-----|/|-----|/|-----|/|-----|/|-----( )-  (* Step 1 *)
 0010                                                             Cross reference for %M0101
                                                                  -] [- 14,15
Step 1                                                            -]/[- 13

%M0101
-| |-
 0014

Step 1                                                            << RUNG 15  STEP #0037 >>
                                                          H20S
%M0101                                                    %Q0001
-| |-------------------------------------------------------( )-  (* Step up *)
 0014                                                             Cross reference for H20S
                                                                          NONE
        Alarm   Tripp.  Alarm   Tripp.  Alarm   Tripp.
        em.stop em.stop overl.  overl.  conv.   conv.   Slow
Step 0                  trip    trip    switch  switch  flash

%M0100  %M0049  %M0086  %M0051  %M0087  %M0053  %M0088  %M0001
-| |---|/|-----|/|-----|/|-----|/|-----|/|-----|/|-----| |-
 0013                                                    0006

Lamp
test

%M0006
-| |-

Step 0                                                            << RUNG 16  STEP #0049 >>
                                                          H21S
%M0100                                                    %Q0002
-|/|-----------------------------------------------------( )-  (* Step down *)
 0013                                                             Cross reference for H21S
                                                                          NONE
Lamp
test

%M0006
-| |-
```

```
(*************************************************************************)
(*                                                                       *)
(* REFERENCE PULSE                                                       *)
(*                                                                       *)
(*************************************************************************)
```

ALW_ON << RUNG 18 STEP #0053 >>

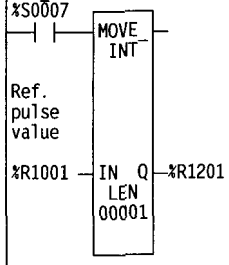

95% << RUNG 19 STEP #0055 >>
ref. pulse

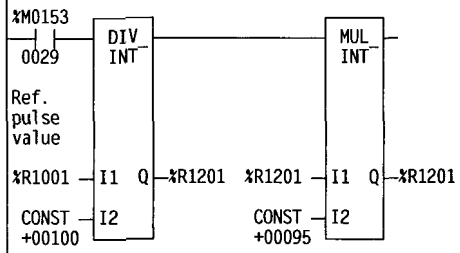

90% << RUNG 20 STEP #0058 >>
ref. pulse

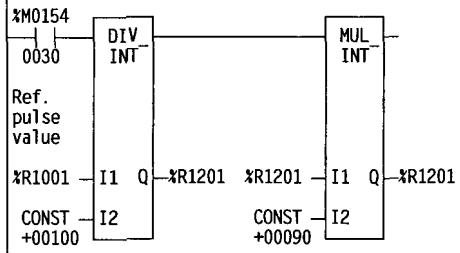

105% << RUNG 21 STEP #0061 >>
ref. pulse

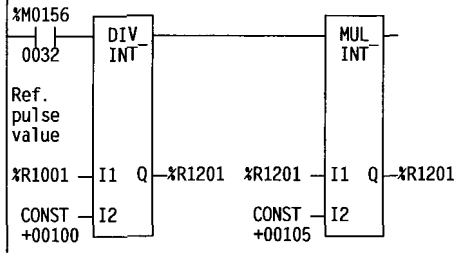

115% << RUNG 22 STEP #0064 >>
ref. pulse

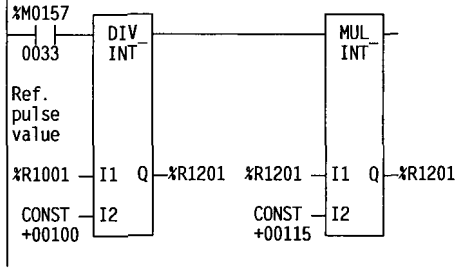

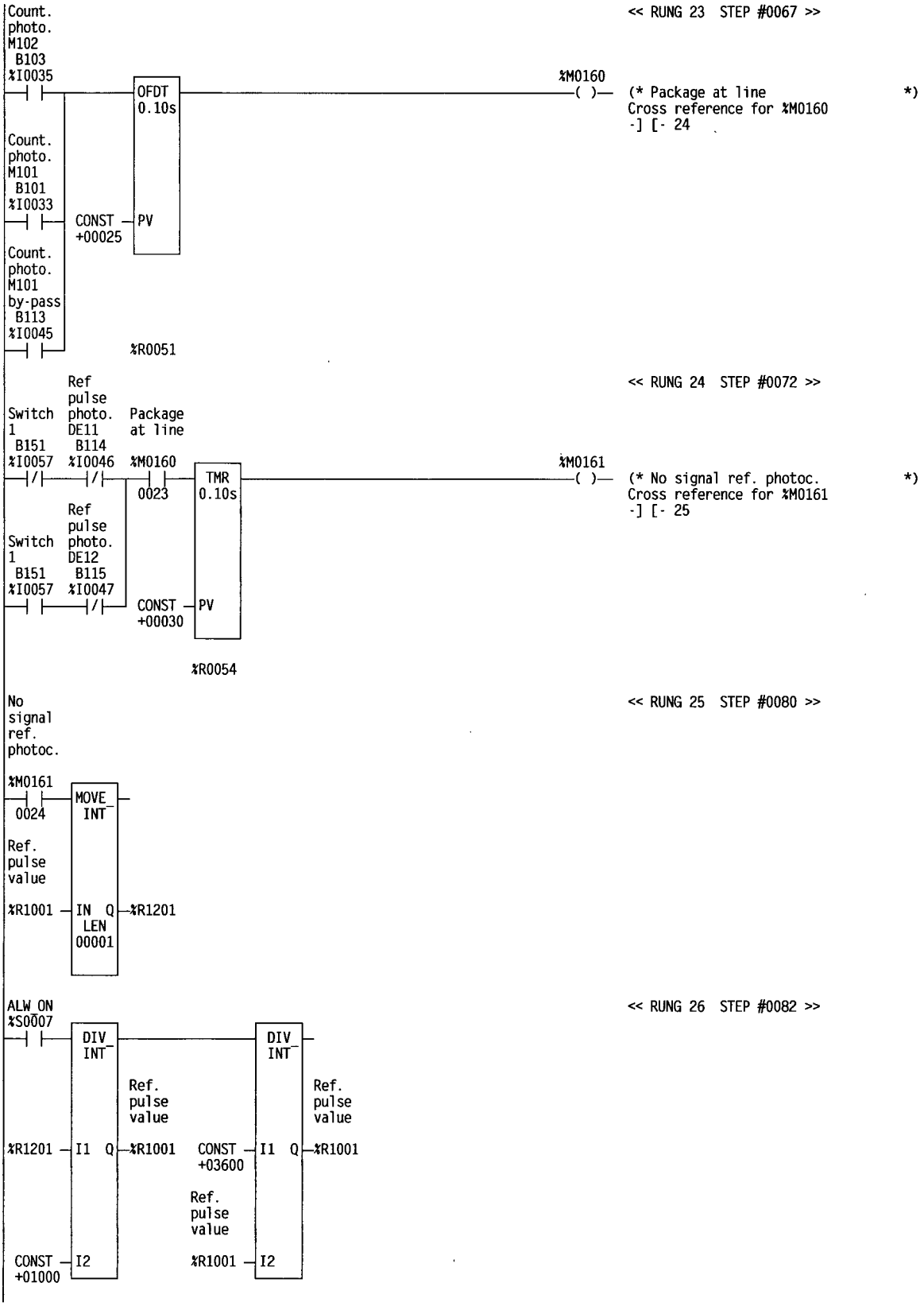
Count. photo. M102 B103 %I0035
OFDT 0.10s
%M0160
<< RUNG 23 STEP #0067 >>
(* Package at line Cross reference for %M0160 -] [- 24 *)
Count. photo. M101 B101 %I0033
CONST +00025
PV
Count. photo. M101 by-pass B113 %I0045
%R0051
Switch 1 B151 %I0057
Ref pulse photo. DE11 B114 %I0046
Package at line %M0160
0023
TMR 0.10s
%M0161
<< RUNG 24 STEP #0072 >>
(* No signal ref. photoc. Cross reference for %M0161 -] [- 25 *)
Ref pulse photo. DE12 B115 %I0047
CONST +00030
%R0054
No signal ref. photoc.
<< RUNG 25 STEP #0080 >>
%M0161 0024
MOVE INT
Ref. pulse value
%R1001
IN Q
LEN 00001
%R1201
ALW_ON %S0007
<< RUNG 26 STEP #0082 >>
DIV INT
Ref. pulse value
%R1201
I1 Q
%R1001
CONST +03600
Ref. pulse value
%R1001
CONST +01000
I2

```
Ref.
pulse                                                          << RUNG 27  STEP #0085 >>

%M0151                                                  %M0151
 0027   TMR                                                     (* Ref. pulse *)
        .001s                                                   Cross reference for %M0151
                                                                -]/[- 27
Ref.
pulse
value

%R1001 PV

        %R0057

        Ref                                                     << RUNG 28  STEP #0088 >>
        pulse
Switch  photo.
1       DE11
 B151    B114
%I0057  %I0046                                          %M0152
        TMR                                                     (* Cond. ref pulse                    *)
        0.10s                                                   Cross reference for %M0152
        Ref                                                     -] [- 29,30
        pulse                                                   -]/[- 32,33
Switch  photo.
1       DE12
 B151    B115
%I0057  %I0047
        CONST PV
        +00005

        %R0060

        Ready   Cond.                                           << RUNG 29  STEP #0095 >>
Switch  signal  ref
1       DE11    pulse
 B151    DE11
%I0057  %I0027  %M0152                                  %M0153
        TMR                                                     (* 95% ref. pulse                     *)
        0.10s                                                   Cross reference for %M0153
        Ready                                                   -] [- 19
Switch  signal
1       DE12
 B151    DE12
%I0057  %I0028
        CONST PV
        +00020

Delay
ref.
pulse

%M0155
 0031                   %R0063

        Ready   Cond.                                           << RUNG 30  STEP #0104 >>
Switch  signal  ref
1       DE11    pulse
 B151    DE11
%I0057  %I0027  %M0152                                  %M0154
        TMR                                                     (* 90% ref. pulse                     *)
        0.10s                                                   Cross reference for %M0154
        Ready                                                   -] [- 20,31
Switch  signal
1       DE12
 B151    DE12
%I0057  %I0028
        CONST PV
        +00040

        %R0066

90%                                                             << RUNG 31  STEP #0112 >>
ref.
pulse

%M0154                                                  %M0155
 0030   OFDT                                                    (* Delay ref. pulse                   *)
        0.10s                                                   Cross reference for %M0155
 CONST PV                                                       -] [- 29
 +00020

        %R0069
```

```
<< RUNG 32  STEP #0115 >>

Switch 1 B151 %I0057 ---|/|---
Ready signal DE11 DE11 %I0027 ---| |---
Cond. ref pulse %M0152 ---|/|--- 0028
Ready signal DE12 DE12 %I0028 ---| |---
Delay ref. pulse %M0158 ---| |--- 0034

TMR 0.10s
CONST +00020 — PV
%R0072

%M0156 ---( )---  (* 105% ref. pulse
                  Cross reference for %M0156
                  -] [- 21                    *)

<< RUNG 33  STEP #0124 >>

Switch 1 B151 %I0057 ---|/|---
Ready signal DE11 DE11 %I0027 ---| |---
Cond. ref pulse %M0152 ---|/|--- 0028
Ready signal DE12 DE12 %I0028 ---| |---

TMR 0.10s
CONST +00040 — PV
%R0075

%M0157 ---( )---  (* 115% ref. pulse
                  Cross reference for %M0157
                  -] [- 22,34                 *)

<< RUNG 34  STEP #0132 >>

115% ref. pulse %M0157 ---| |--- 0033

OFDT 0.10s
CONST +00010 — PV
%R0078

%M0158 ---( )---  (* Delay ref. pulse
                  Cross reference for %M0158
                  -] [- 32                    *)
```

```
(*****************************************************************************)
(*                                                                           *)
(* LAYOUT                                                                    *)
(*                                                                           *)
(*****************************************************************************)

ALW_ON                                                          << RUNG 36  STEP #0136 >>
%S0007                                                  %M0111
 ─┤ ├─ EQ_INT ──────────────────────────────────────────( )─  (* Layout 1                    *)
                                                                Cross reference for %M0111
                                                                        NONE
Layout
1-4
%R1000 ─ I1  Q
 CONST ─ I2
 +00001

ALW_ON                                                          << RUNG 37  STEP #0139 >>
%S0007                                                  %M0112
 ─┤ ├─ EQ_INT ──────────────────────────────────────────( )─  (* Layout 2                    *)
                                                                Cross reference for %M0112
                                                                        NONE
Layout
1-4
%R1000 ─ I1  Q
 CONST ─ I2
 +00002

ALW_ON                                                          << RUNG 38  STEP #0142 >>
%S0007                                                  %M0113
 ─┤ ├─ EQ_INT ──────────────────────────────────────────( )─  (* Layout 3                    *)
                                                                Cross reference for %M0113
                                                                        NONE
Layout
1-4
%R1000 ─ I1  Q
 CONST ─ I2
 +00003

ALW_ON                                                          << RUNG 39  STEP #0145 >>
%S0007                                                  %M0114
 ─┤ ├─ EQ_INT ──────────────────────────────────────────( )─  (* Layout 4                    *)
                                                                Cross reference for %M0114
                                                                        NONE
Layout
1-4
%R1000 ─ I1  Q
 CONST ─ I2
 +00004
```

```
(*************************************************************************)
(*                                                                       *)
(* COOLING FAN                                                           *)
(*                                                                       *)
(*************************************************************************)

Step 0                                                          << RUNG 41  STEP #0149 >>
                                                          K080
%M0100                                                   %Q0049
 0013 ──┤ ├──────────────────────────────────────────────( )──  (* Fan cabinet *)
                                                                Cross reference for K080
                                                                        NONE
```

```
(*************************************************************************)
(*                                                                       *)
(* MAIN CONTACTOR                                                        *)
(*                                                                       *)
(*************************************************************************)

Step 0                                                          << RUNG 43  STEP #0152 >>
                                                          K001
%M0100                                                   %Q0041
──┤ ├──────────────────────────────────────────────────────( )──  (* Main  contac.                    *)
 0013                                                             Cross reference for K001
                                                                          NONE

[    END OF SUBROUTINE LOGIC     ]
```

```
[  START LD SUBROUTINE   LINE    ]

[     VARIABLE DECLARATIONS      ]

[   START OF SUBROUTINE LOGIC    ]

 >>>>
```

```
(*****************************************************************************)
(*                                                                           *)
(* START AND STOP                                                            *)
(*                                                                           *)
(*****************************************************************************)

        Group   Group                                                << RUNG 5  STEP #0003 >>
        trip    safety
Step 1  overl.  switch

%M0101  %M0077  %M0078                                  %M0300
-| |----|/|----| |-------------------------------------( )-  (* Start ok line 1 *)
                                                                Cross reference for %M0300
                                                                -] [- 201,206
                                                                -]/[- 45,76,106,135,165,194

Pack                                                         << RUNG 6  STEP #0007 >>
coming  Slow
fill 1  flash
  PC1
%I0025  %M0001                                          %T0100
-| |----| |-------------------------------------------(^)-  (* Pack coming filler *)
                                                                Cross reference for %T0100
                                                                -] [- 16

Count.                                                       << RUNG 7  STEP #0010 >>
photo.
M101    Layout
by-pass 4
 B113
%I0045  %M0114                                          %T0101
-| |----| |-------------------------------------------(^)-  (* Pack at B113                    *)
                                                                Cross reference for %T0101
                                                                -] [- 16

Count.                                                       << RUNG 8  STEP #0013 >>
photo.
M102
 B103
%I0035                                                  %T0102
-| |-------------------------------------------------(^)-  (* Pack at B103                    *)
                                                                Cross reference for %T0102
                                                                -] [- 16

Count.                                                       << RUNG 9  STEP #0015 >>
photo.
M103
 B105
%I0037                                                  %T0103
-| |-------------------------------------------------(^)-  (* Pack at B105                    *)
                                                                Cross reference for %T0103
                                                                -] [- 16

Count.                                                       << RUNG 10  STEP #0017 >>
photo.
M104
 B107
%I0039                                                  %T0104
-| |-------------------------------------------------(^)-  (* Pack at B107                    *)
                                                                Cross reference for %T0104
                                                                -] [- 16

Count.                                                       << RUNG 11  STEP #0019 >>
photo.
M105
 B109
%I0041                                                  %T0105
-| |-------------------------------------------------(^)-  (* Pack at B109                    *)
                                                                Cross reference for %T0105
                                                                          NONE

Count.                                                       << RUNG 12  STEP #0021 >>
photo.
M106
 B111
%I0043                                                  %T0106
-| |-------------------------------------------------(^)-  (* Pack at B111                    *)
                                                                Cross reference for %T0106
                                                                -] [- 16

Auto                                                         << RUNG 13  STEP #0023 >>
run
S001-A
%I0006                                                  %T0107
-| |-------------------------------------------------(^)-  (* Auto run *)
                                                                Cross reference for %T0107
                                                                -] [- 16
```

```
Ready                                                    << RUNG 14  STEP #0025 >>
signal
DE11
 DE11
%I0027                                          %T0108
 ─┤ ├──────────────────────────────────────────(^)─  (* DE 11 ready                    *)
                                                        Cross reference for %T0108
                                                        -] [- 17

Ready                                                    << RUNG 15  STEP #0027 >>
signal
DE12
 DE12
%I0028                                          %T0109
 ─┤ ├──────────────────────────────────────────(^)─  (* DE 12 ready                    *)
                                                        Cross reference for %T0109
                                                        -] [- 17

Pack                                                     << RUNG 16  STEP #0029 >>
coming
filler

%T0100
 ─┤ ├──────────────────────────────────────────<+>
  0006
 │
 │ Pack at
 │ B113
 │
 │ %T0101
 │ ─┤ ├─
 │  0007
 │
 │ Pack at
 │ B103
 │
 │ %T0102
 │ ─┤ ├─
 │  0008
 │
 │ Pack at
 │ B105
 │
 │ %T0103
 │ ─┤ ├─
 │  0009
 │
 │ Pack at
 │ B107
 │
 │ %T0104
 │ ─┤ ├─
 │  0010
 │
 │ Pack at
 │ B111
 │
 │ %T0106
 │ ─┤ ├─
 │  0012
 │
 │ Auto
 │ run
 │
 │ %T0107
 │ ─┤ ├─
 │  0013
 │
<+>──┬──────────┬──────────┬──────────────────────────%M0301   << RUNG 17  STEP #0037 >>
     │          │ MUL_     │ OFDT                     ─( )─   (* Start line 1 *)
     │          │ INT      │ 0.10s                            Cross reference for %M0301
     │          │          │                                  -] [- 201,206
     │ DE 11    │          │                                  -]/[- 45,76,106,135,165,194
     │ ready    │ Run      │
     │          │ time     │
     │          │ conv.    │
     │ %T0108   │          │
     │ ─┤ ├─    │ %R1005 ─┤I1  Q├─%R1015  %R1015 ─┤PV
     │  0014    │          │
     │          │          │
     │ DE 12    │          │
     │ ready    │          │
     │          │          │
     │ %T0109   │          │
     │ ─┤ ├─    │ CONST ─┤I2          %R0200
     │  0015    │ +00010   │
```

```
(*****************************************************************************)
(*                                                                           *)
(* MOTOR 101                                                                 *)
(*                                                                           *)
(*****************************************************************************)

Count.                                                          << RUNG 19  STEP #0044 >>
photo.
M101
 B101
%I0033                                                   %T0110
 ─┤ ├─ TMR                                              ─(^)─  (* Count.  pulse M101 *)
        0.01s                                                  Cross reference for %T0110
                                                               -] [- 32
Counter
pulse
%R1100 ─PV

        %R0300

Count.                                                          << RUNG 20  STEP #0047 >>
photo.
M101
 B101
%I0033                                                   %T0111
 ─┤ ├─ TMR                                              ─(^)─  (* No sep. pulse M101 *)
        0.10s                                                  Cross reference for %T0111
                                                               -] [- 33
No sep.
pulse
%R1101 ─PV

        %R0303

Low                                                             << RUNG 21  STEP #0050 >>
speed
M101

%M0312                                                   %T0112
 ─┤ ├─ TMR                                              ─(^)─  (* Queue   pulse M101 *)
 0025   0.10s                                                  Cross reference for %T0112
                                                               -] [- 34
Forced
low
speed
pulse
%R1102 ─PV

        %R0306

Ref                                                             << RUNG 22  STEP #0053 >>
pulse
photo.  Switch
DE11    1
 B114    B151
%I0046  %I0057                                           %M0310
 ─┤ ├──┤/├──┬──────────── TMR                           ─( )─  (* Low speed ref. photo.          *)
                                                               Cross reference for %M0310
        Ref                                                    -] [- 25
        pulse
Layout  photo.  Switch  Low
3       DE12    1       speed
         B115    B151   cond.
%M0113  %I0047  %I0057  ref.
 ─┤ ├──┤ ├──┤ ├──┬──── %R1008 ─PV
                                
        Stop
Layout  photo.
4       M111
         B132
%M0114  %I0054
 ─┤ ├──┤ ├──┘                %R0309
```

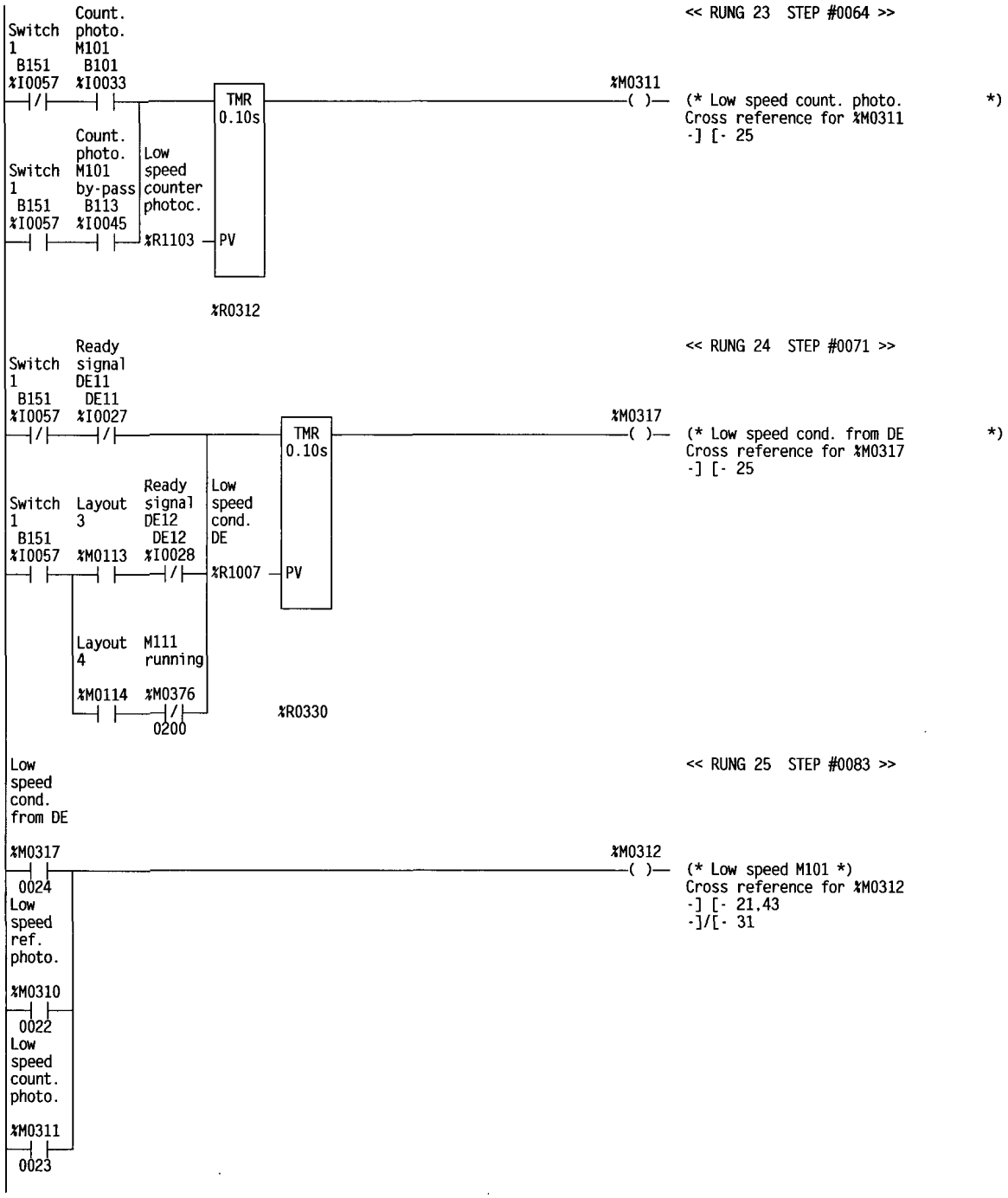
<< RUNG 23 STEP #0064 >>
Switch 1 B151 %I0057
Count. photo. M101 B101 %I0033
TMR 0.10s
%M0311
(* Low speed count. photo. *)
Cross reference for %M0311
-] [- 25
Switch 1 B151 %I0057
Count. photo. M101 by-pass B113 %I0045
Low speed counter photoc. %R1103
PV
%R0312
<< RUNG 24 STEP #0071 >>
Switch 1 B151 %I0057
Ready signal DE11 DE11 %I0027
TMR 0.10s
%M0317
(* Low speed cond. from DE *)
Cross reference for %M0317
-] [- 25
Switch 1 B151 %I0057
Layout 3 %M0113
Ready signal DE12 DE12 %I0028
Low speed cond. DE %R1007
PV
Layout 4 %M0114
M111 running %M0376
0200
%R0330
<< RUNG 25 STEP #0083 >>
Low speed cond. from DE %M0317
0024
Low speed ref. photo. %M0310
0022
Low speed count. photo. %M0311
0023
%M0312
(* Low speed M101 *)
Cross reference for %M0312
-] [- 21.43
-]/[- 31

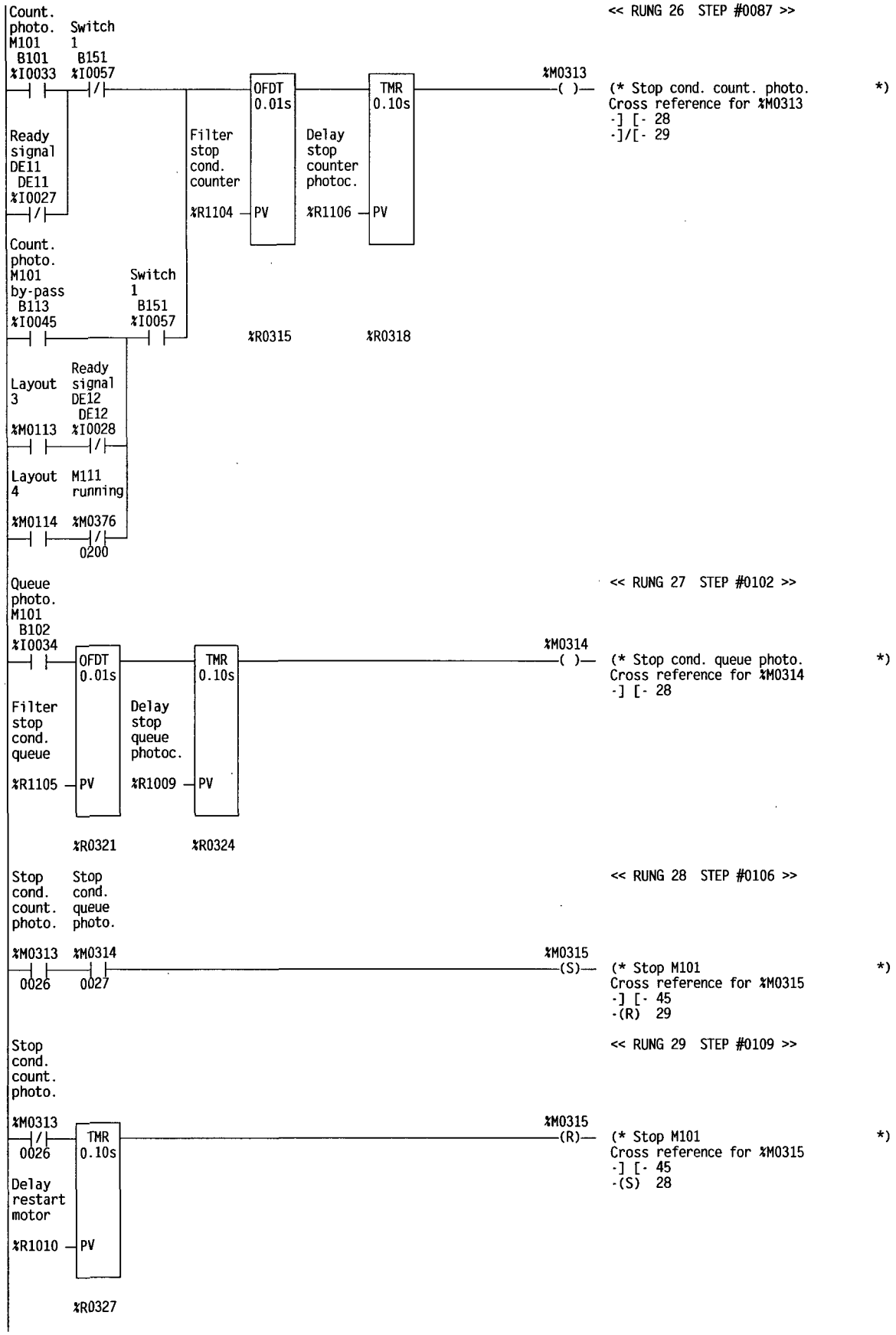
<< RUNG 26 STEP #0087 >>
Count. photo. M101 B101 %I0033
Switch 1 B151 %I0057
Ready signal DE11 DE11 %I0027
Count. photo. M101 by-pass B113 %I0045
Switch 1 B151 %I0057
Layout 3 %M0113
Ready signal DE12 DE12 %I0028
Layout 4 %M0114
M111 running %M0376
0200
OFDT 0.01s
Filter stop cond. counter %R1104
PV
%R0315
TMR 0.10s
Delay stop counter photoc. %R1106
PV
%R0318
%M0313
( )
(* Stop cond. count. photo. *)
Cross reference for %M0313
-] [- 28
-]/[- 29
<< RUNG 27 STEP #0102 >>
Queue photo. M101 B102 %I0034
OFDT 0.01s
Filter stop cond. queue %R1105
PV
%R0321
TMR 0.10s
Delay stop queue photoc. %R1009
PV
%R0324
%M0314
( )
(* Stop cond. queue photo. *)
Cross reference for %M0314
-] [- 28
<< RUNG 28 STEP #0106 >>
Stop cond. count. photo. %M0313 0026
Stop cond. queue photo. %M0314 0027
%M0315
(S)
(* Stop M101 *)
Cross reference for %M0315
-] [- 45
-(R) 29
<< RUNG 29 STEP #0109 >>
Stop cond. count. photo. %M0313 0026
TMR 0.10s
Delay restart motor %R1010
PV
%R0327
%M0315
(R)
(* Stop M101 *)
Cross reference for %M0315
-] [- 45
-(S) 28

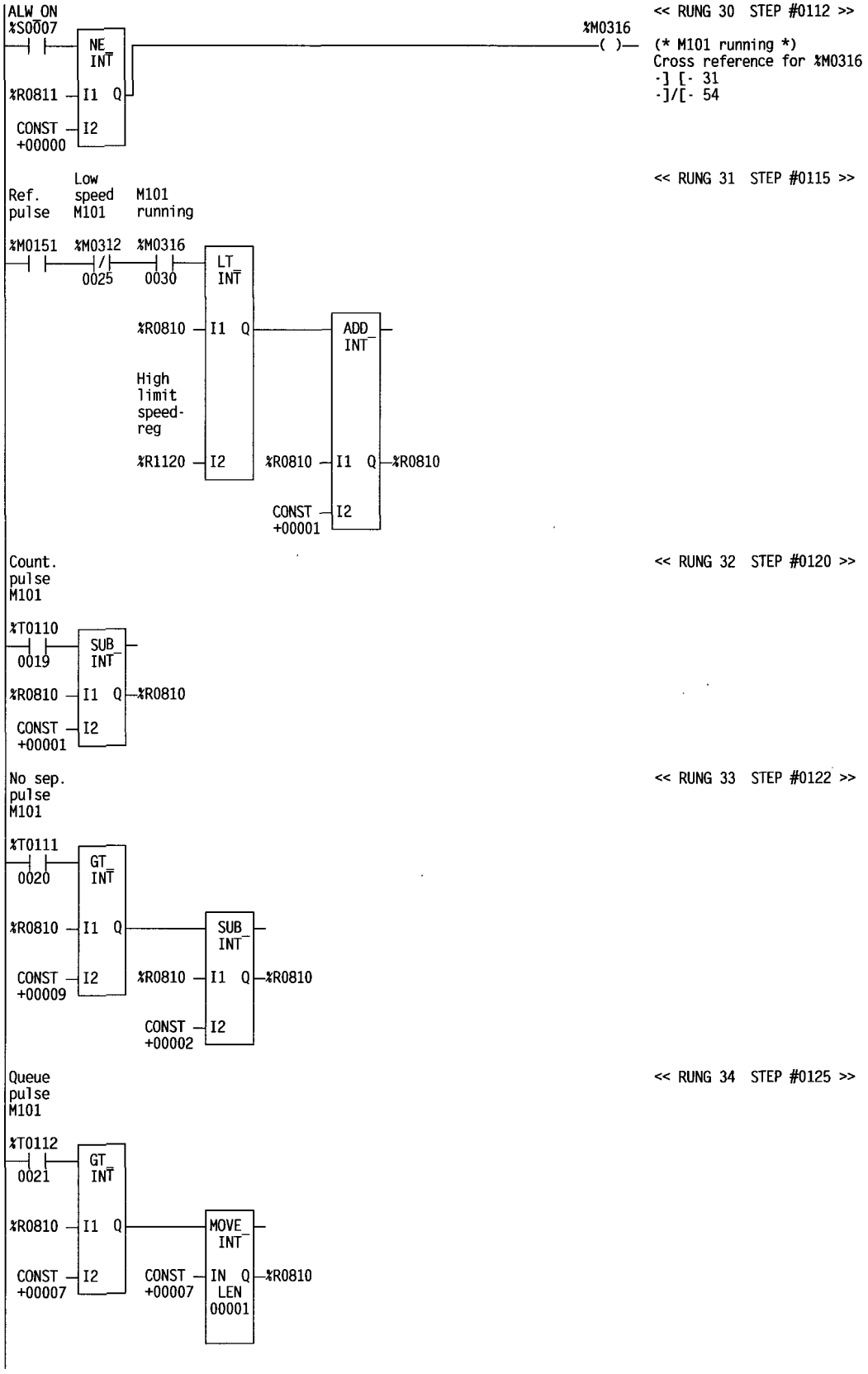
ALW_ON
%S0007
NE_INT
%R0811
I1
Q
CONST
+00000
I2
%M0316
( )
<< RUNG 30 STEP #0112 >>
(* M101 running *)
Cross reference for %M0316
-] [- 31
-]/[- 54
Ref. pulse
Low speed M101
M101 running
%M0151
%M0312
%M0316
0025
0030
LT_INT
%R0810
High limit speed-reg
%R1120
ADD_INT
CONST
+00001
<< RUNG 31 STEP #0115 >>
Count. pulse M101
%T0110
0019
SUB_INT
<< RUNG 32 STEP #0120 >>
No sep. pulse M101
%T0111
0020
GT_INT
<< RUNG 33 STEP #0122 >>
Queue pulse M101
%T0112
0021
MOVE_INT
IN
LEN
00001
<< RUNG 34 STEP #0125 >>

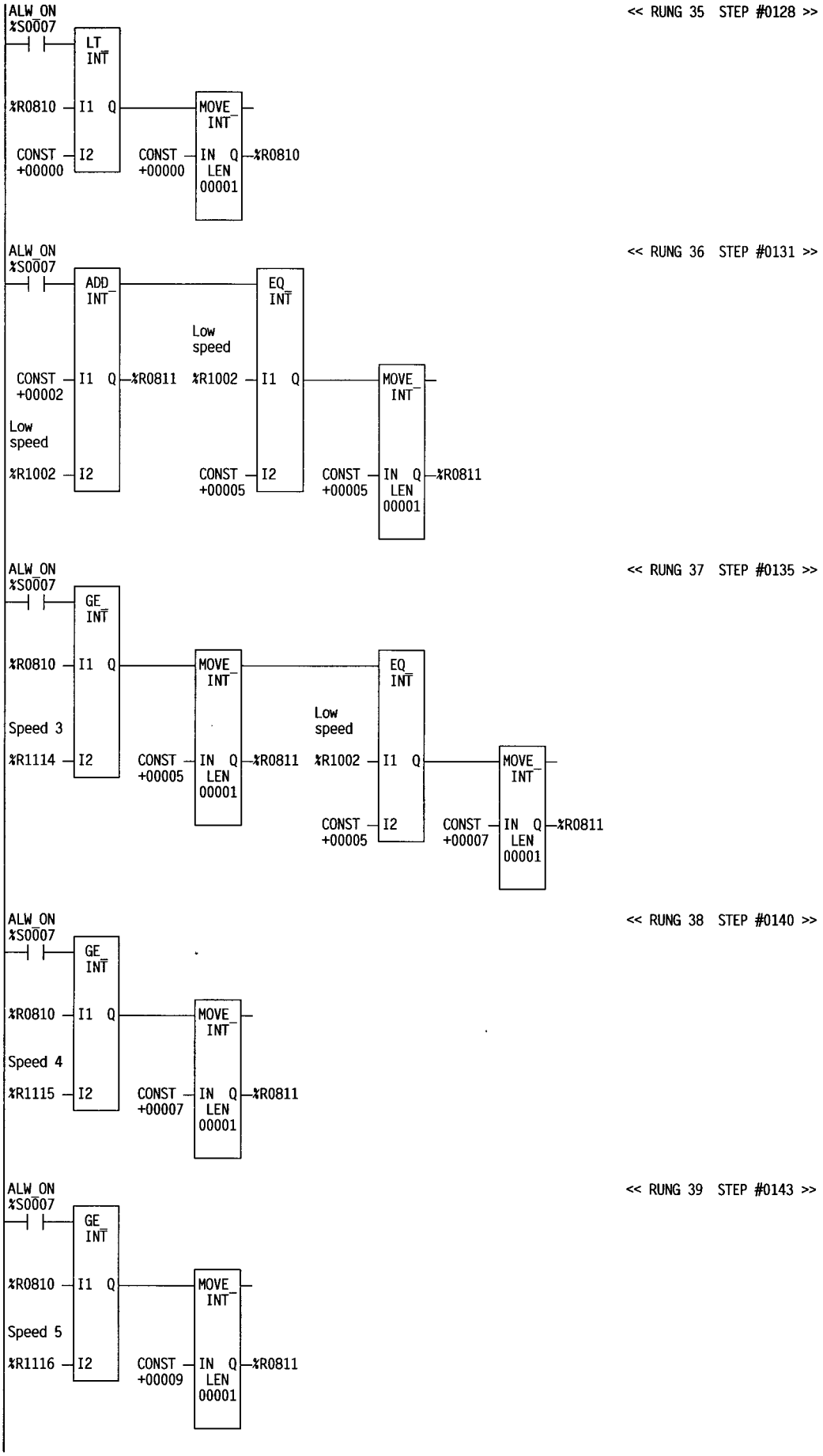
<< RUNG 35 STEP #0128 >>
ALW_ON
%S0007
LT_INT
%R0810
I1 Q
CONST +00000
I2
MOVE_INT
CONST +00000
IN Q
LEN 00001
%R0810
<< RUNG 36 STEP #0131 >>
ALW_ON
%S0007
ADD_INT
CONST +00002
I1 Q
%R0811
Low speed
%R1002
I2
EQ_INT
Low speed
%R1002
I1 Q
CONST +00005
I2
MOVE_INT
CONST +00005
IN Q
LEN 00001
%R0811
<< RUNG 37 STEP #0135 >>
ALW_ON
%S0007
GE_INT
%R0810
I1 Q
Speed 3
%R1114
I2
MOVE_INT
CONST +00005
IN Q
LEN 00001
%R0811
EQ_INT
Low speed
%R1002
I1 Q
CONST +00005
I2
MOVE_INT
CONST +00007
IN Q
LEN 00001
%R0811
<< RUNG 38 STEP #0140 >>
ALW_ON
%S0007
GE_INT
%R0810
I1 Q
Speed 4
%R1115
I2
MOVE_INT
CONST +00007
IN Q
LEN 00001
%R0811
<< RUNG 39 STEP #0143 >>
ALW_ON
%S0007
GE_INT
%R0810
I1 Q
Speed 5
%R1116
I2
MOVE_INT
CONST +00009
IN Q
LEN 00001
%R0811

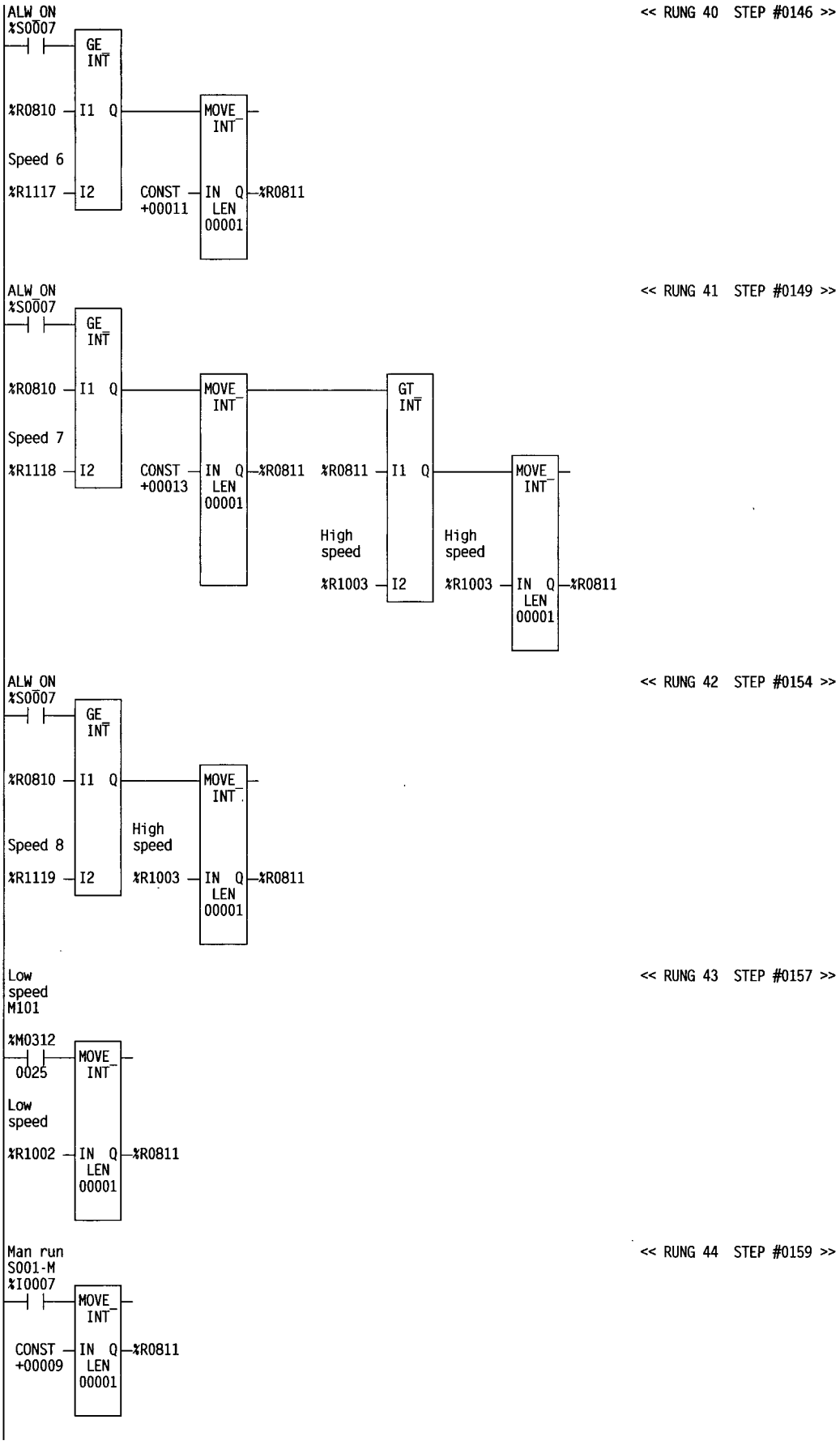
ALW_ON
%S0007
GE_INT
%R0810
I1 Q
Speed 6
%R1117
I2
MOVE_INT
CONST +00011
IN Q
LEN 00001
%R0811
<< RUNG 40 STEP #0146 >>
ALW_ON
%S0007
GE_INT
%R0810
I1 Q
Speed 7
%R1118
I2
MOVE_INT
CONST +00013
IN Q
LEN 00001
%R0811
GT_INT
%R0811
I1 Q
High speed
%R1003
I2
MOVE_INT
High speed
%R1003
IN Q
LEN 00001
%R0811
<< RUNG 41 STEP #0149 >>
ALW_ON
%S0007
GE_INT
%R0810
I1 Q
Speed 8
%R1119
I2
MOVE_INT
High speed
%R1003
IN Q
LEN 00001
%R0811
<< RUNG 42 STEP #0154 >>
Low speed M101
%M0312
0025
MOVE_INT
Low speed
%R1002
IN Q
LEN 00001
%R0811
<< RUNG 43 STEP #0157 >>
Man run S001-M
%I0007
MOVE_INT
CONST +00009
IN Q
LEN 00001
%R0811
<< RUNG 44 STEP #0159 >>

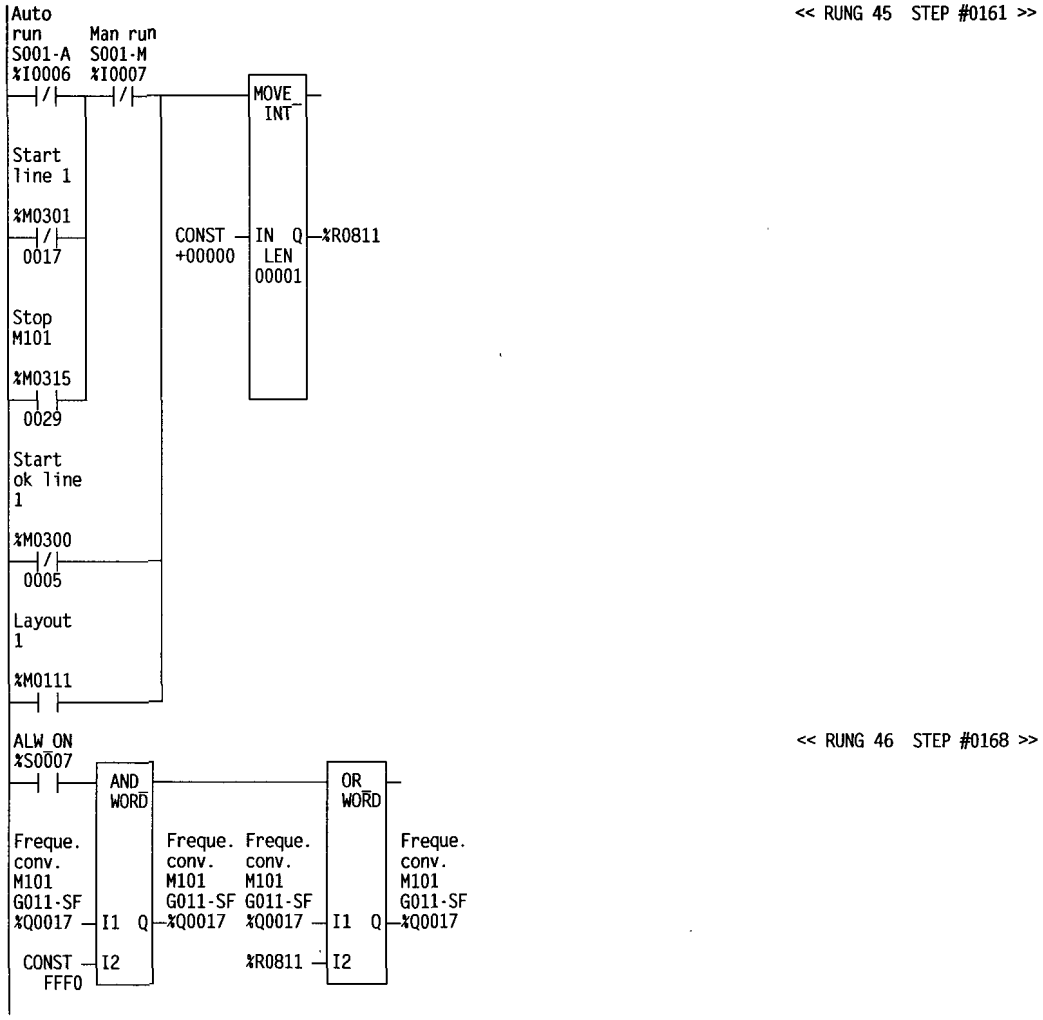
<< RUNG 45 STEP #0161 >>
Auto run S001-A %I0006
Man run S001-M %I0007
MOVE_INT
Start line 1
%M0301
0017
CONST +00000
IN Q
LEN 00001
%R0811
Stop M101
%M0315
0029
Start ok line 1
%M0300
0005
Layout 1
%M0111
ALW_ON %S0007
<< RUNG 46 STEP #0168 >>
AND_WORD
OR_WORD
Freque. conv. M101 G011-SF %Q0017
I1 Q
I2
CONST FFF0
Freque. conv. M101 G011-SF %Q0017
Freque. conv. M101 G011-SF %Q0017
%R0811

```
(*****************************************************************************)
(*                                                                           *)
(* MOTOR 102                                                                 *)
(*                                                                           *)
(*****************************************************************************)

Count.                                                          << RUNG 48  STEP #0172 >>
photo.
M102
 B103
%I0035
 ─┤ ├─ TMR                                                %T0120
        0.01s                                             ──(^)──  (* Count.  pulse M102 *)
                                                                   Cross reference for %T0120
Counter                                                            -] [- 62
pulse
%R1100 ─PV

        %R0351

Count.                                                          << RUNG 49  STEP #0175 >>
photo.
M102
 B103
%I0035
 ─┤ ├─ TMR                                                %T0121
        0.10s                                             ──(^)──  (* No sep. pulse M102 *)
                                                                   Cross reference for %T0121
No sep.                                                            -] [- 63
pulse
%R1101 ─PV

        %R0354

Low                                                             << RUNG 50  STEP #0178 >>
speed
M102

%M0322
 ─┤ ├─ TMR                                                %T0122
  0055  0.10s                                             ──(^)──  (* Queue   pulse M102 *)
                                                                   Cross reference for %T0122
Forced                                                             -] [- 64
low
speed
pulse
%R1102 ─PV

        %R0357

        Ref                                                     << RUNG 51  STEP #0181 >>
        pulse
Layout  photo.
1       DE11
         B114
%M0111  %I0046                                            %M0320
 ─┤ ├──┤ ├──┬── TMR                                     ──( )──  (* Low speed queue photo.          *)
            │   0.10s                                            Cross reference for %M0320
            │                                                    -] [- 55
        Queue  Low
Layout  photo. speed
1       M101   cond.
         B102  ref.
%M0111  %I0034
 ─┤/├──┤ ├──┘ %R1008 ─PV

                %R0363
```

```
Count.
photo.
M102
 B103
%I0035                                                    << RUNG 52  STEP #0188 >>
 ─┤ ├─┌──────┐──────────────────────────────────────%M0321
        │ TMR  │                                      ─( )─  (* Low speed count. photo          *)
        │0.10s │                                             Cross reference for %M0321
Low     │      │                                             -] [- 55
speed   │      │
counter │      │
photoc. │      │
%R1103 ─│PV    │
        └──────┘
        %R0366
        Ready
Layout  signal                                            << RUNG 53  STEP #0191 >>
1       DE11
         DE11
%M0111  %I0027
 ─┤ ├──┤/├─┌──────┐──────────────────────────────────%M0327
        │ TMR  │                                      ─( )─  (* Cond.1 low speed/stop           *)
        │0.10s │                                             Cross reference for %M0327
        │      │                                             -] [- 55,56
        Low     │      │
        speed   │      │
        cond.   │      │
        DE      │      │
        %R1007 ─│PV    │
                └──────┘
                %R0384
Layout  M101                                              << RUNG 54  STEP #0195 >>
1       running
%M0111  %M0316                                            %M0328
 ─┤/├──┤/├───────────────────────────────────────────────( )─  (* Cond.2 low speed/stop           *)
         0030                                                Cross reference for %M0328
                                                             -] [- 55,56
Low                                                       << RUNG 55  STEP #0198 >>
speed
queue
photo.
%M0320                                                    %M0322
 ─┤ ├───────────────────────────────────────────────────( )─  (* Low speed M102 *)
 0051                                                        Cross reference for %M0322
Low                                                          -] [- 50,73
speed                                                        -]/[- 61
count.
photo
%M0321
 ─┤ ├─
 0052
Cond.1
low
speed/
stop
%M0327
 ─┤ ├─
 0053
Cond.2
low
speed/
stop
%M0328
 ─┤ ├─
 0054
```

```
Count.                                                          << RUNG 56  STEP #0203 >>
photo.
M102
 B103
%I0035                                                   %M0323
 ─┤ ├──┬──[OFDT 0.01s]──────[TMR 0.10s]──────────────────( )──  (* Stop cond. M102 *)
Cond.1  │ Filter                Delay                              Cross reference for %M0323
low     │ stop                  stop                               -] [- 58
speed/  │ cond.                 counter                            -]/[- 59
stop    │ counter               photoc.
%M0327  │%R1104 ─PV             %R1106 ─PV
 ─┤ ├──┤
 0053   │
Cond.2  │
low     │
speed/  │
stop    │
%M0328  │
 ─┤ ├──┘        %R0369          %R0372
 0054

Queue                                                           << RUNG 57  STEP #0209 >>
photo.
M102
 B104
%I0036                                                   %M0324
 ─┤ ├──[OFDT 0.01s]──────[TMR 0.10s]──────────────────( )──  (* Stop cond. M102 *)
                                                                Cross reference for %M0324
Filter                Delay                                     -] [- 58
stop                  stop
cond.                 queue
queue                 photoc.
%R1105 ─PV            %R1009 ─PV

        %R0375        %R0378

Stop    Stop                                                    << RUNG 58  STEP #0213 >>
cond.   cond.
M102    M102

%M0323  %M0324                                           %M0325
 ─┤ ├──┬──┤ ├──────────────────────────────────────────(S)──  (* Stop M102                    *)
 0056   │ 0057                                                  Cross reference for %M0325
        │                                                       -] [- 76
        │                                                       -(R)  59

Stop                                                            << RUNG 59  STEP #0216 >>
cond.
M102

%M0323                                                   %M0325
 ─┤/├──[TMR 0.10s]──────────────────────────────────────(R)──  (* Stop M102                    *)
 0056                                                           Cross reference for %M0325
                                                                -] [- 76
Delay                                                           -(S)  58
restart
motor
%R1010 ─PV

        %R0381

ALW_ON                                                          << RUNG 60  STEP #0219 >>
%S0007                                                   %M0326
 ─┤ ├──[NE_INT]──────────────────────────────────────────( )──  (* M102 running *)
                                                                Cross reference for %M0326
%R0821 ─I1  Q                                                   -] [- 61
                                                                -]/[- 85,86
 CONST ─I2
 +00000
```

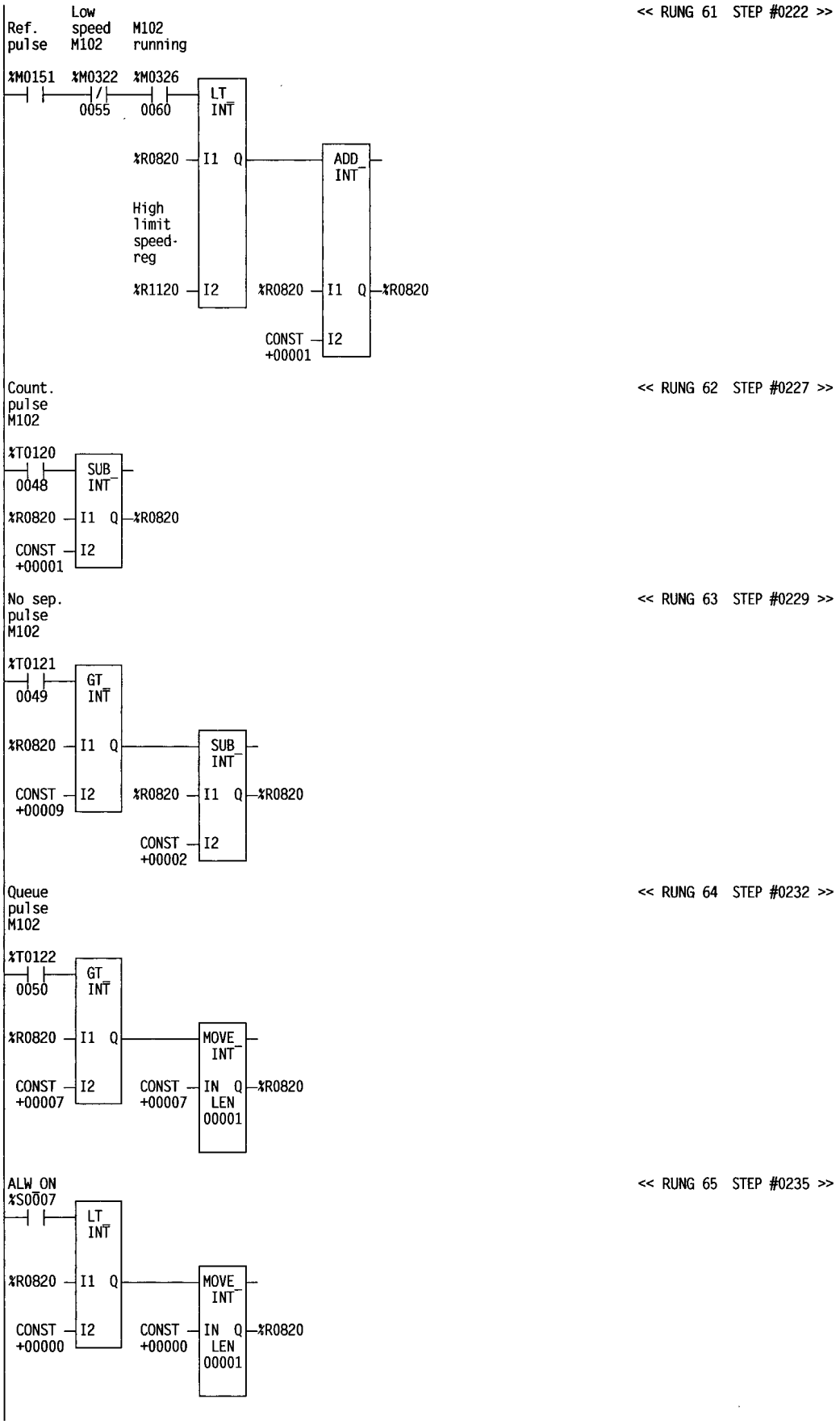

<< RUNG 61 STEP #0222 >>

<< RUNG 62 STEP #0227 >>

<< RUNG 63 STEP #0229 >>

<< RUNG 64 STEP #0232 >>

<< RUNG 65 STEP #0235 >>

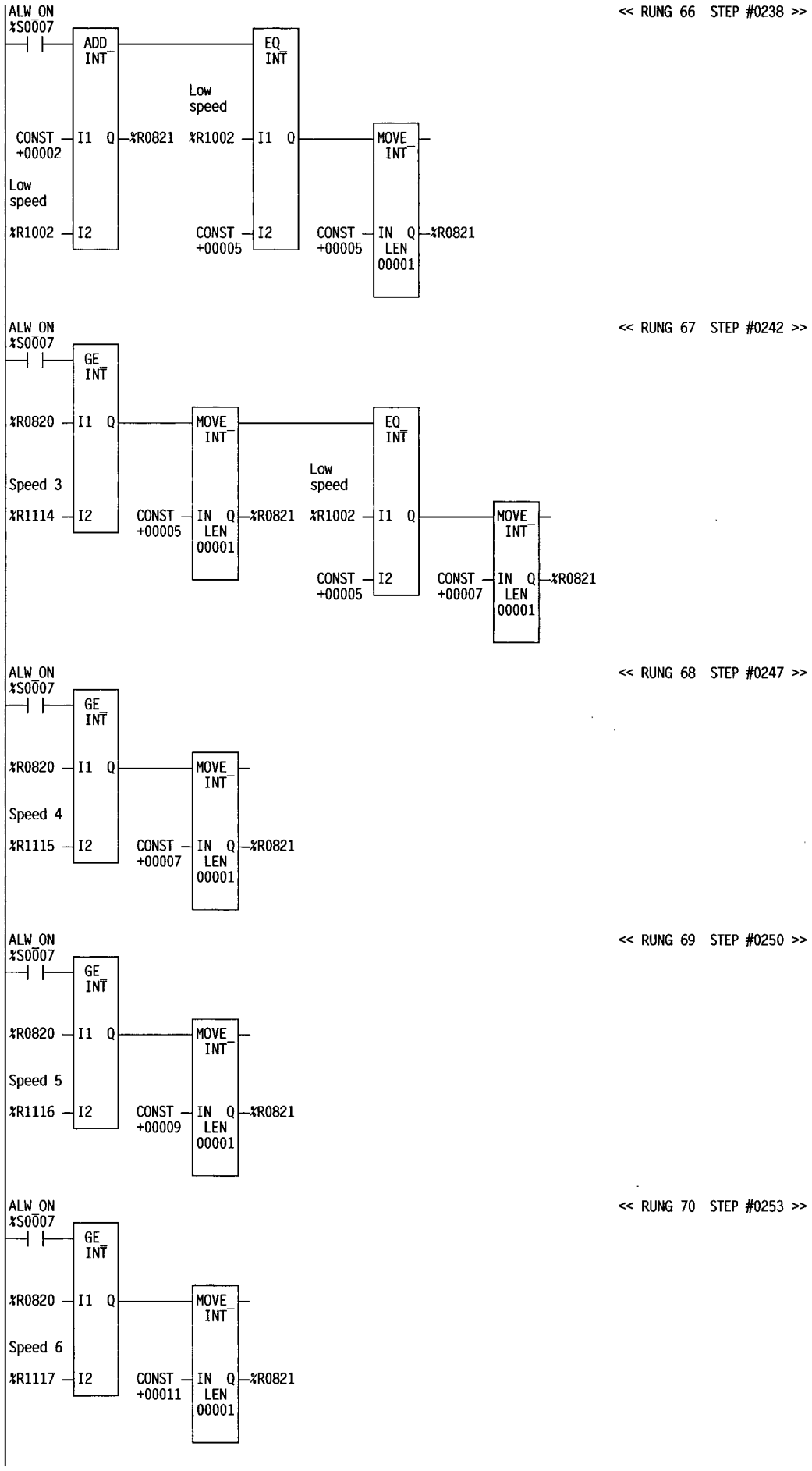
ALW_ON
%S0007
ADD_INT
CONST +00002
I1 Q
%R0821
Low speed
%R1002
I2
EQ_INT
Low speed
%R1002
I1 Q
CONST +00005
I2
MOVE_INT
CONST +00005
IN Q
LEN 00001
%R0821
<< RUNG 66 STEP #0238 >>
ALW_ON
%S0007
GE_INT
%R0820
I1 Q
Speed 3
%R1114
I2
MOVE_INT
CONST +00005
IN Q
LEN 00001
%R0821
EQ_INT
Low speed
%R1002
I1 Q
CONST +00005
I2
MOVE_INT
CONST +00007
IN Q
LEN 00001
%R0821
<< RUNG 67 STEP #0242 >>
ALW_ON
%S0007
GE_INT
%R0820
I1 Q
Speed 4
%R1115
I2
MOVE_INT
CONST +00007
IN Q
LEN 00001
%R0821
<< RUNG 68 STEP #0247 >>
ALW_ON
%S0007
GE_INT
%R0820
I1 Q
Speed 5
%R1116
I2
MOVE_INT
CONST +00009
IN Q
LEN 00001
%R0821
<< RUNG 69 STEP #0250 >>
ALW_ON
%S0007
GE_INT
%R0820
I1 Q
Speed 6
%R1117
I2
MOVE_INT
CONST +00011
IN Q
LEN 00001
%R0821
<< RUNG 70 STEP #0253 >>

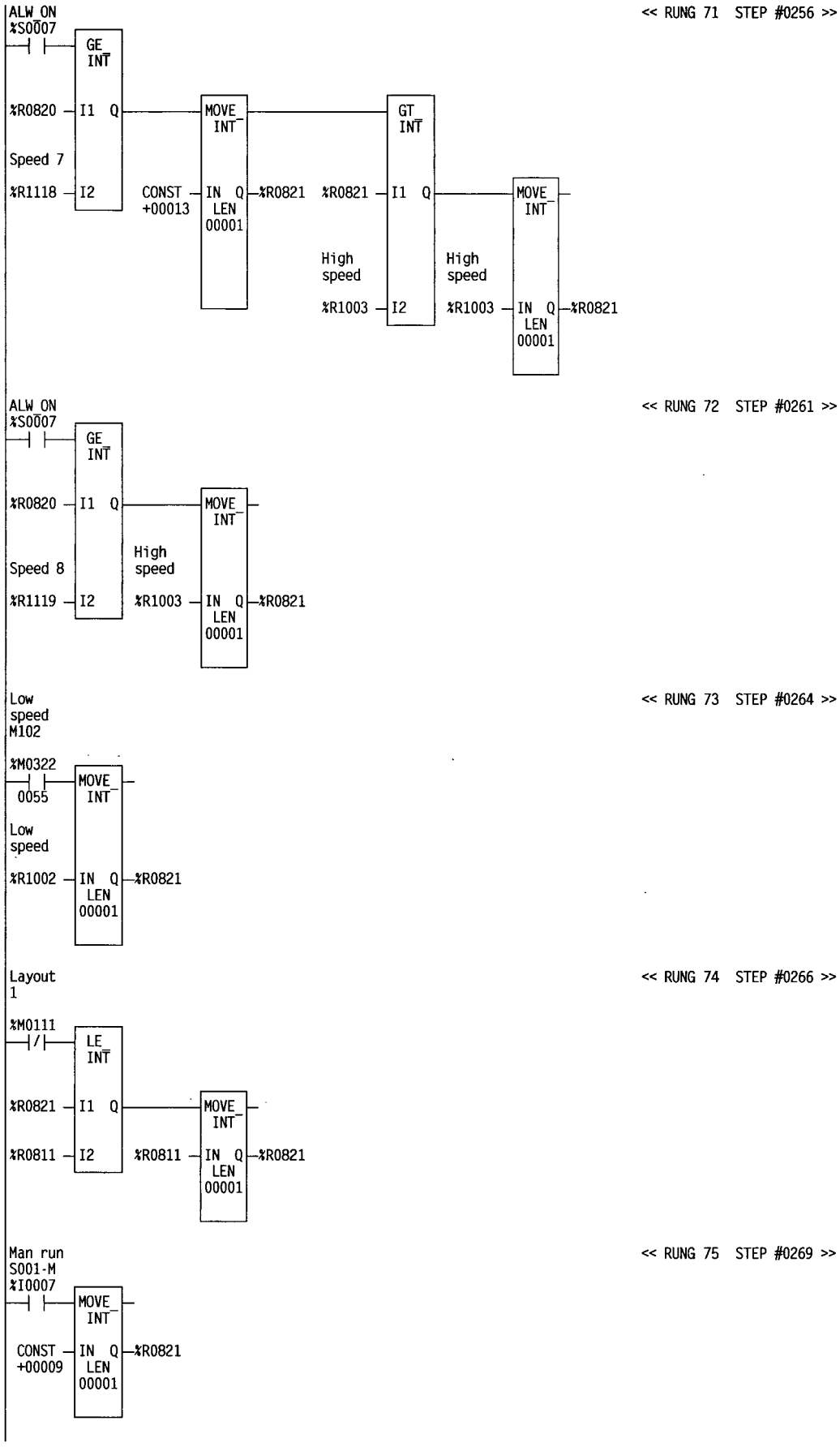
ALW ON
%S0007
GE INT
%R0820
I1 Q
Speed 7
%R1118
I2
MOVE INT
CONST +00013
IN Q
LEN 00001
%R0821
GT INT
%R0821
I1 Q
High speed
%R1003
I2
MOVE INT
IN Q
LEN 00001
%R0821
<< RUNG 71 STEP #0256 >>
ALW ON
%S0007
GE INT
%R0820
I1 Q
Speed 8
%R1119
I2
MOVE INT
High speed
%R1003
IN Q
LEN 00001
%R0821
<< RUNG 72 STEP #0261 >>
Low speed M102
%M0322
0055
MOVE INT
Low speed
%R1002
IN Q
LEN 00001
%R0821
<< RUNG 73 STEP #0264 >>
Layout 1
%M0111
LE INT
%R0821
I1 Q
%R0811
I2
MOVE INT
%R0811
IN Q
LEN 00001
%R0821
<< RUNG 74 STEP #0266 >>
Man run S001-M
%I0007
MOVE INT
CONST +00009
IN Q
LEN 00001
%R0821
<< RUNG 75 STEP #0269 >>

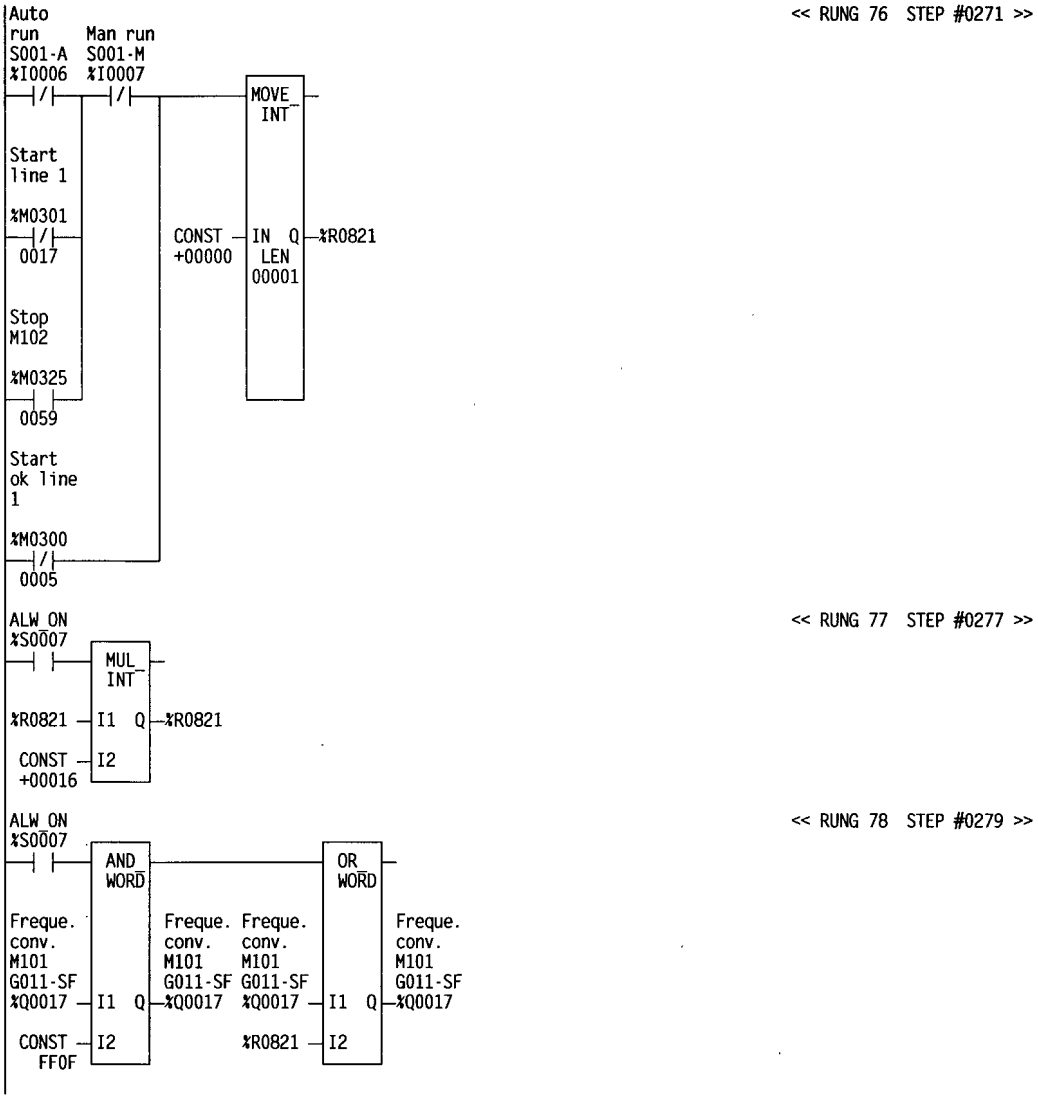
Auto run S001-A %I0006
Man run S001-M %I0007
MOVE_INT
Start line 1
%M0301
0017
CONST +00000
IN Q
LEN 00001
%R0821
Stop M102
%M0325
0059
Start ok line 1
%M0300
0005
<< RUNG 76 STEP #0271 >>
ALW_ON %S0007
MUL_INT
%R0821
I1 Q
CONST +00016
I2
<< RUNG 77 STEP #0277 >>
ALW_ON %S0007
AND_WORD
OR_WORD
Freque. conv. M101 G011-SF %Q0017
CONST FF0F
<< RUNG 78 STEP #0279 >>

```
(*************************************************************************)
(*                                                                       *)
(* MOTOR 103                                                             *)
(*                                                                       *)
(*************************************************************************)

Count.                                                          << RUNG 80  STEP #0283 >>
photo.
M103
 B105
%I0037                                                  %T0130
-| |-  TMR                                            -(^)-  (* Count.  pulse M103 *)
      0.01s                                                  Cross reference for %T0130
                                                             -] [- 92
Counter
pulse
%R1100 -PV

      %R0400

Count.                                                          << RUNG 81  STEP #0286 >>
photo.
M103
 B105
%I0037                                                  %T0131
-| |-  TMR                                            -(^)-  (* No sep. pulse M103 *)
      0.10s                                                  Cross reference for %T0131
                                                             -] [- 93
No sep.
pulse
%R1101 -PV

      %R0403

Low                                                             << RUNG 82  STEP #0289 >>
speed
M103
%M0332                                                  %T0132
-| |-  TMR                                            -(^)-  (* Queue   pulse M103 *)
 0085 0.10s                                                  Cross reference for %T0132
                                                             -] [- 94
Forced
low
speed
pulse
%R1102 -PV

      %R0406

ALW_OFF                                                         << RUNG 83  STEP #0292 >>
%S0008                                                  %M0330
-| |-  TMR                                            -( )-  (* Cond. low speed M103 *)
      0.10s                                                  Cross reference for %M0330
                                                             -] [- 85
Low
speed
queue
photoc.
%R1107 -PV

      %R0415

Count.                                                          << RUNG 84  STEP #0295 >>
photo.
M103
 B105
%I0037                                                  %M0331
-| |-  TMR                                            -( )-  (* Cond. low speed M103 *)
      0.10s                                                  Cross reference for %M0331
                                                             -] [- 85
Low
speed
counter
photoc.
%R1103 -PV

      %R0418
```

```
M102
running                                                          << RUNG 85  STEP #0298 >>

%M0326                                                   %M0332
 -|/|-------------------------------------------------------( )-  (* Low speed M103 *)
 0060                                                            Cross reference for %M0332
Cond.                                                            -] [- 82,103
low                                                              -]/[- 91
speed
M103

%M0330
 -| |-
 0083
Cond.
low
speed
M103

%M0331
 -| |-
 0084

Count.                                                           << RUNG 86  STEP #0302 >>
photo.
M103
 B105
%I0037                                                   %M0333
 -| |-------+-------[OFDT]-------[TMR]-------------------------( )-  (* Stop cond. M103 *)
             |       0.01s        0.10s                             Cross reference for %M0333
             |                                                      -] [- 88
M102         |Filter   Delay                                        -]/[- 89
running      |stop     stop
             |cond.    counter
%M0326       |counter  photoc.
 -|/|-       |%R1104 -PV  %R1106 -PV
 0060

             %R0421     %R0424

Queue                                                            << RUNG 87  STEP #0307 >>
photo.
M103
 B106
%I0038                                                   %M0334
 -| |-------[OFDT]-------[TMR]-------------------------------( )-  (* Stop cond. M103 *)
             0.01s        0.10s                                    Cross reference for %M0334
                                                                   -] [- 88
Filter       Delay
stop         stop
cond.        queue
queue        photoc.
%R1105 -PV   %R1012 -PV

             %R0427     %R0430

Stop    Stop                                                     << RUNG 88  STEP #0311 >>
cond.   cond.
M103    M103

%M0333  %M0334                                           %M0335
 -| |-  -| |-------------------------------------------------(S)-  (* Stop M103 *)
 0086    0087                                                      Cross reference for %M0335
                                                                   -] [- 106
                                                                   -(R)  89

Stop                                                             << RUNG 89  STEP #0314 >>
cond.
M103

%M0333                                                   %M0335
 -|/|-------[TMR]-------------------------------------------(R)-  (* Stop M103 *)
 0086        0.10s                                                 Cross reference for %M0335
                                                                   -] [- 106
Delay                                                              -(S)  88
restart
motor

%R1108 -PV

            %R0433
```

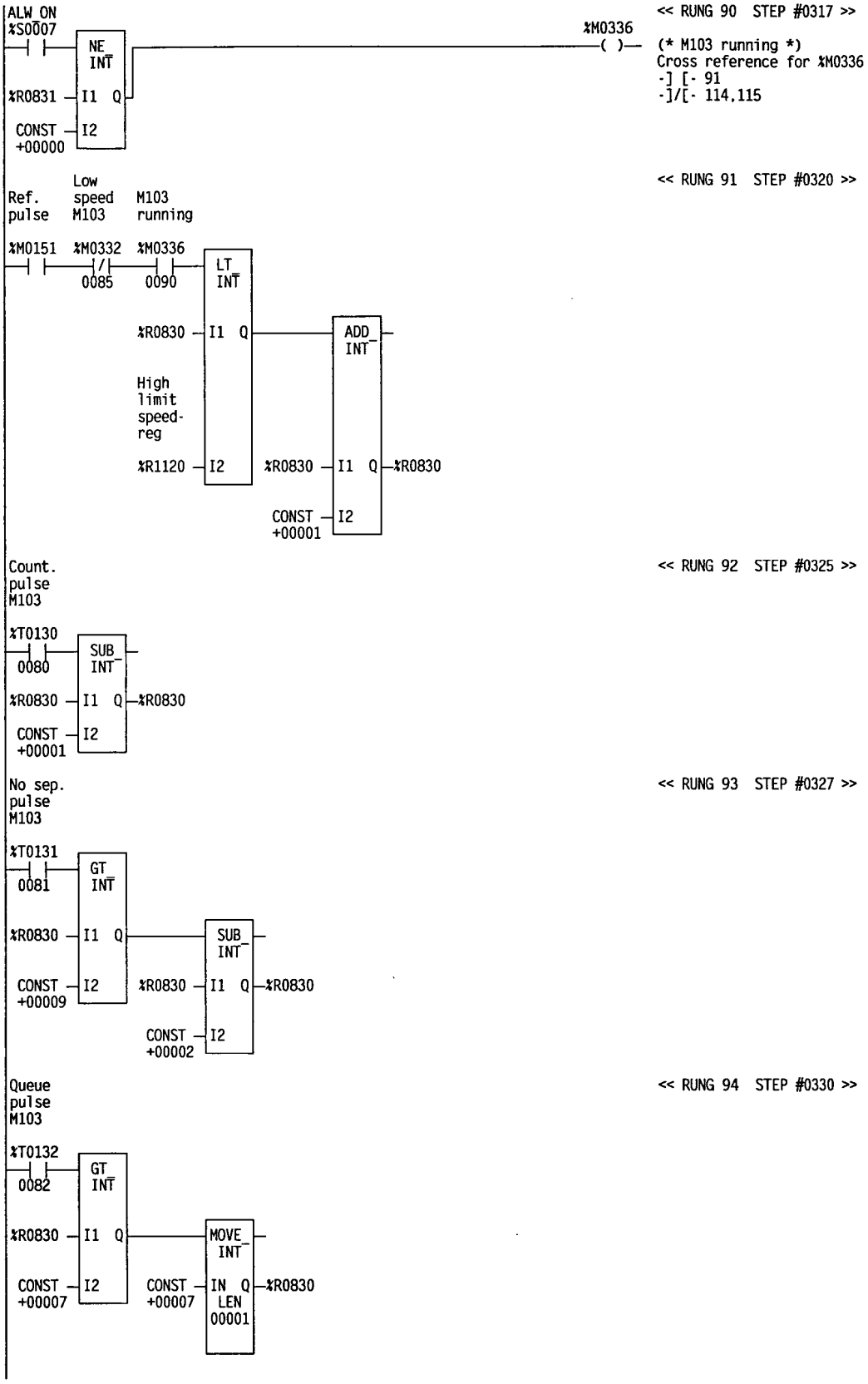
ALW_ON
%S0007
NE INT
%R0831
I1 Q
CONST +00000
I2
%M0336
( )
<< RUNG 90 STEP #0317 >>
(* M103 running *)
Cross reference for %M0336
-] [- 91
-]/[- 114,115
Ref. pulse
Low speed M103
M103 running
%M0151
%M0332
%M0336
0085
0090
LT INT
%R0830
I1 Q
High limit speed-reg
%R1120
I2
ADD INT
%R0830
I1 Q
%R0830
CONST +00001
I2
<< RUNG 91 STEP #0320 >>
Count. pulse M103
%T0130
0080
SUB INT
%R0830
I1 Q
%R0830
CONST +00001
I2
<< RUNG 92 STEP #0325 >>
No sep. pulse M103
%T0131
0081
GT INT
%R0830
I1 Q
CONST +00009
I2
SUB INT
%R0830
I1 Q
%R0830
CONST +00002
I2
<< RUNG 93 STEP #0327 >>
Queue pulse M103
%T0132
0082
GT INT
%R0830
I1 Q
CONST +00007
I2
MOVE INT
CONST +00007
IN Q
%R0830
LEN 00001
<< RUNG 94 STEP #0330 >>

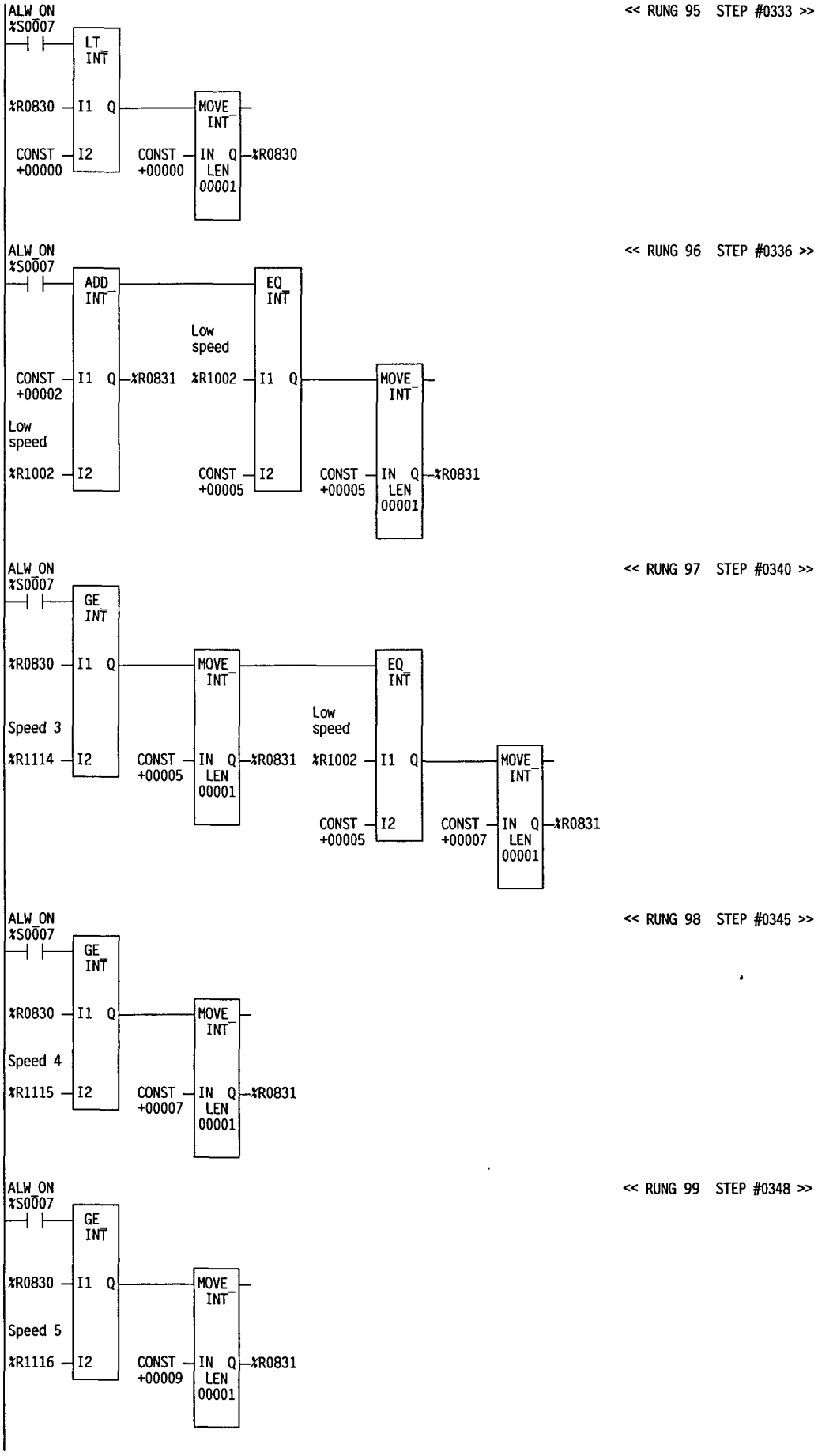
<< RUNG 95 STEP #0333 >>
ALW_ON
%S0007
LT_INT
%R0830
I1
Q
CONST
+00000
I2
MOVE_INT
CONST
+00000
IN
Q
LEN
00001
%R0830
<< RUNG 96 STEP #0336 >>
ALW_ON
%S0007
ADD_INT
CONST
+00002
I1
Q
%R0831
Low
speed
%R1002
I2
EQ_INT
Low
speed
%R1002
I1
Q
CONST
+00005
I2
MOVE_INT
CONST
+00005
IN
Q
LEN
00001
%R0831
<< RUNG 97 STEP #0340 >>
ALW_ON
%S0007
GE_INT
%R0830
I1
Q
Speed 3
%R1114
I2
MOVE_INT
CONST
+00005
IN
Q
LEN
00001
%R0831
EQ_INT
Low
speed
%R1002
I1
Q
CONST
+00005
I2
MOVE_INT
CONST
+00007
IN
Q
LEN
00001
%R0831
<< RUNG 98 STEP #0345 >>
ALW_ON
%S0007
GE_INT
%R0830
I1
Q
Speed 4
%R1115
I2
MOVE_INT
CONST
+00007
IN
Q
LEN
00001
%R0831
<< RUNG 99 STEP #0348 >>
ALW_ON
%S0007
GE_INT
%R0830
I1
Q
Speed 5
%R1116
I2
MOVE_INT
CONST
+00009
IN
Q
LEN
00001
%R0831

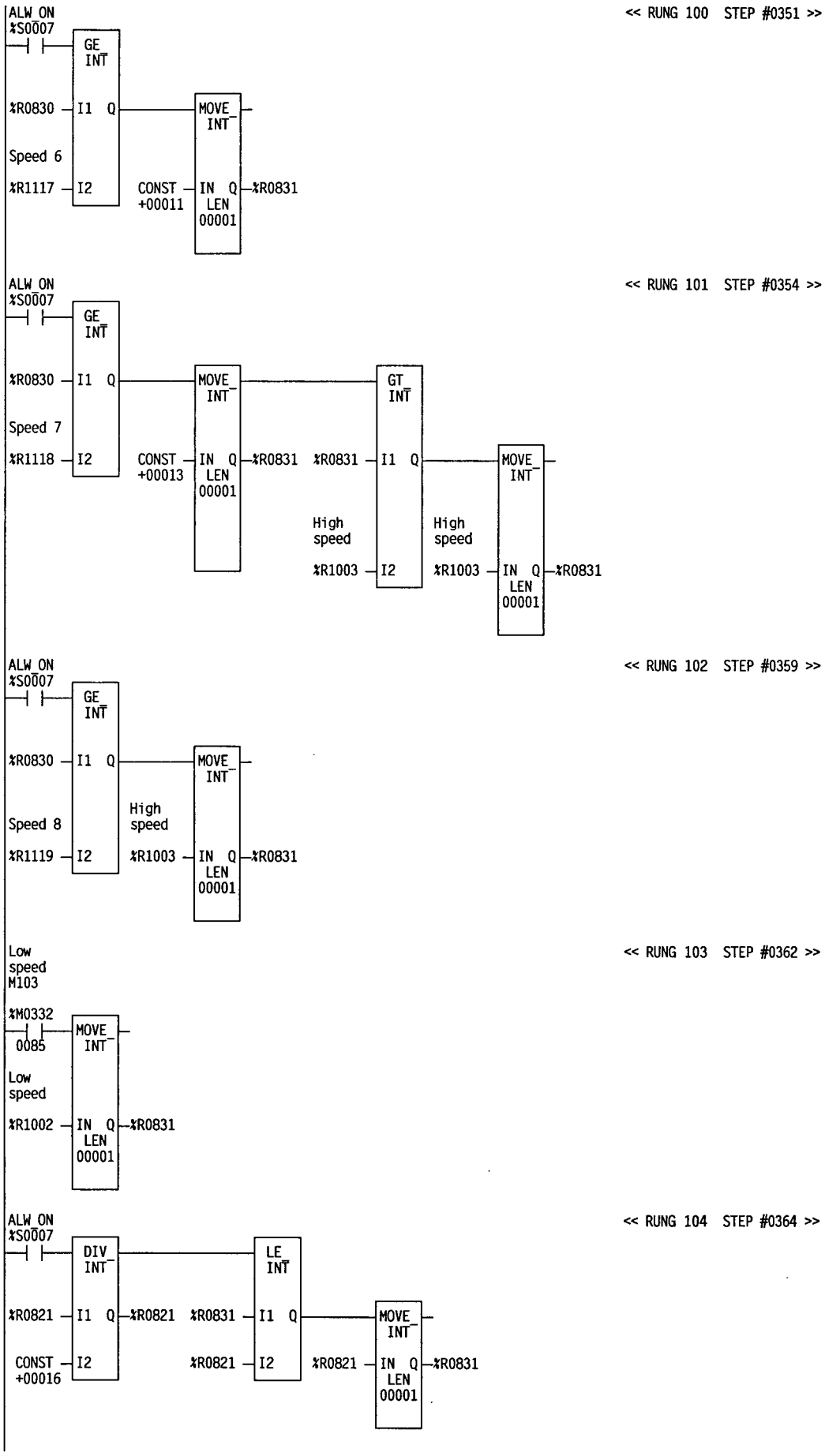
ALW_ON
%S0007
GE_INT
%R0830
I1 Q
Speed 6
%R1117
I2
MOVE_INT
CONST +00011
IN Q
LEN 00001
%R0831
<< RUNG 100 STEP #0351 >>
ALW_ON
%S0007
GE_INT
%R0830
I1 Q
Speed 7
%R1118
I2
MOVE_INT
CONST +00013
IN Q
LEN 00001
%R0831
GT_INT
%R0831
I1 Q
High speed
%R1003
I2
MOVE_INT
High speed
%R1003
IN Q
LEN 00001
%R0831
<< RUNG 101 STEP #0354 >>
ALW_ON
%S0007
GE_INT
%R0830
I1 Q
Speed 8
%R1119
I2
MOVE_INT
High speed
%R1003
IN Q
LEN 00001
%R0831
<< RUNG 102 STEP #0359 >>
Low speed M103
%M0332
0085
MOVE_INT
Low speed
%R1002
IN Q
LEN 00001
%R0831
<< RUNG 103 STEP #0362 >>
ALW_ON
%S0007
DIV_INT
%R0821
I1 Q
%R0821
CONST +00016
I2
LE_INT
%R0831
I1 Q
%R0821
I2
MOVE_INT
%R0821
IN Q
LEN 00001
%R0831
<< RUNG 104 STEP #0364 >>

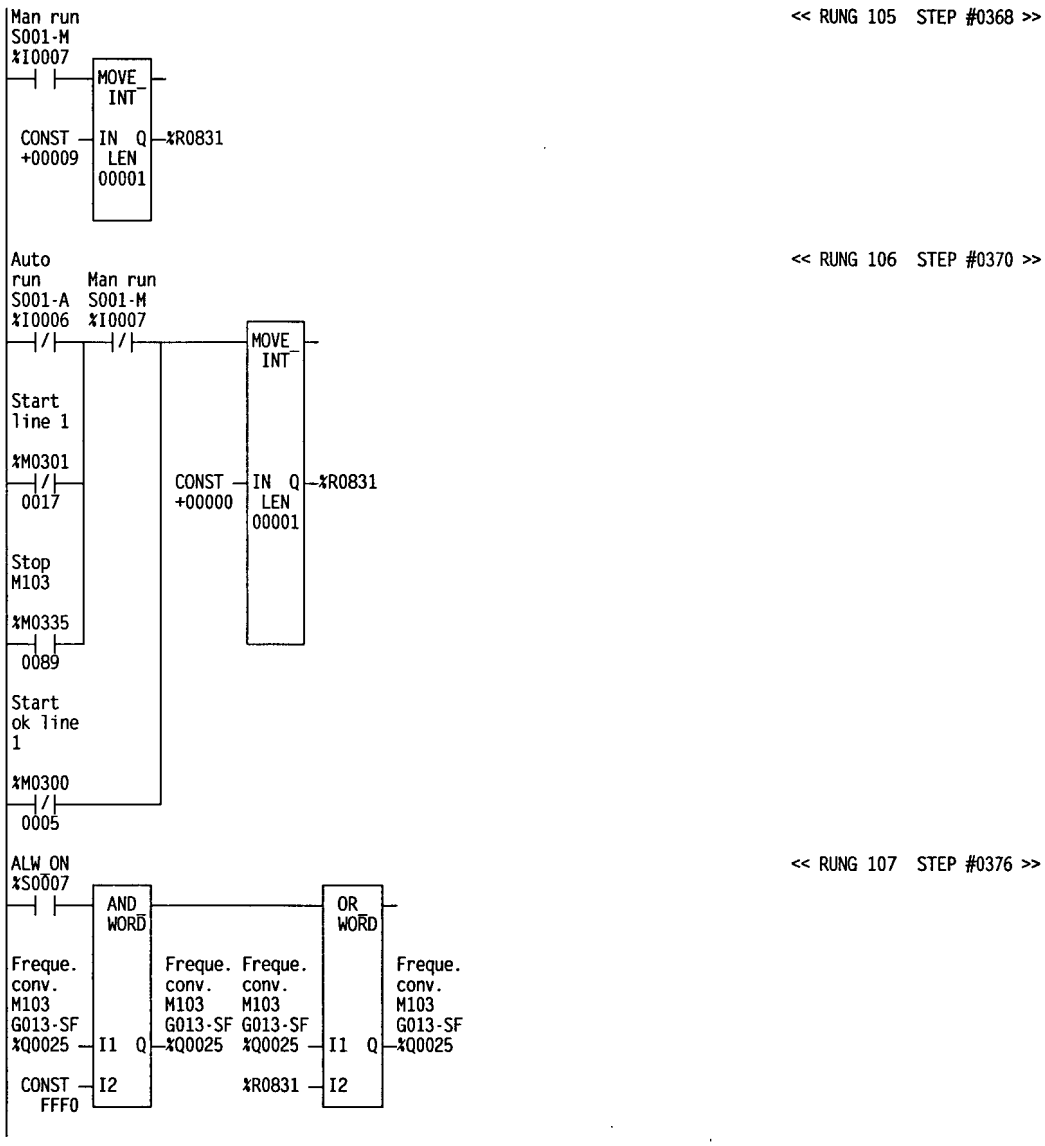
<< RUNG 105 STEP #0368 >>
Man run
S001-M
%I0007
MOVE_INT
CONST +00009
IN Q
LEN 00001
%R0831
<< RUNG 106 STEP #0370 >>
Auto run
S001-A
%I0006
Man run
S001-M
%I0007
Start line 1
%M0301
0017
Stop M103
%M0335
0089
Start ok line 1
%M0300
0005
MOVE_INT
CONST +00000
IN Q
LEN 00001
%R0831
<< RUNG 107 STEP #0376 >>
ALW_ON
%S0007
AND_WORD
Freque. conv. M103 G013-SF
%Q0025
I1 Q
CONST FFF0
I2
Freque. conv. M103 G013-SF
%Q0025
Freque. conv. M103 G013-SF
%Q0025
%R0831
OR_WORD
I1 Q
I2
Freque. conv. M103 G013-SF
%Q0025

```
(*************************************************************************)
(*                                                                       *)
(* MOTOR 104                                                             *)
(*                                                                       *)
(*************************************************************************)

Count.                                                    << RUNG 109  STEP #0380 >>
photo.
M104
 B107
%I0039                                          %T0140
-| |-  TMR                                      -(^)-  (* Count.  pulse M104 *)
      0.01s                                             Cross reference for %T0140
                                                        -] [- 121
Counter
pulse
%R1100 - PV

       %R0451

Count.                                                    << RUNG 110  STEP #0383 >>
photo.
M104
 B107
%I0039                                          %T0141
-| |-  TMR                                      -(^)-  (* No sep. pulse M104 *)
      0.10s                                             Cross reference for %T0141
                                                        -] [- 122
No sep.
pulse
%R1101 - PV

       %R0454

Low                                                       << RUNG 111  STEP #0386 >>
speed
104

%M0342                                          %T0142
-| |-  TMR                                      -(^)-  (* Queue   pulse M104 *)
 0114  0.10s                                            Cross reference for %T0142
                                                        -] [- 123
Forced
low
speed
pulse
%R1102 - PV

       %R0457

ALW_OFF                                                   << RUNG 112  STEP #0389 >>
%S0008                                          %M0340
-| |-  TMR                                      -( )-  (* Cond. low speed M104 *)
      0.10s                                             Cross reference for %M0340
                                                        -] [- 114
Low
speed
queue
photoc.
%R1107 - PV

       %R0463

Count.                                                    << RUNG 113  STEP #0392 >>
photo.
M104
 B107
%I0039                                          %M0341
-| |-  TMR                                      -( )-  (* Cond. low speed M104 *)
      0.10s                                             Cross reference for %M0341
                                                        -] [- 114
Low
speed
counter
photoc.
%R1103 - PV

       %R0466
```

```
M103
running                                                          << RUNG 114  STEP #0395 >>

%M0336                                                   %M0342
 0090 ---|/|-----------------------------------------------( )--  (* Low speed 104 *)
Cond.                                                            Cross reference for %M0342
low                                                              -] [- 111,132
speed                                                            -]/[- 120
M104
%M0340
 0112 ---| |---
Cond.
low
speed
M104
%M0341
 0113 ---| |---

Count.                                                           << RUNG 115  STEP #0399 >>
photo.
M104
 B107
%I0039                                                   %M0343
 ---| |---+---[OFDT 0.01s]---[TMR 0.10s]-----------------( )--  (* Stop cond M104 *)
           |                                                     Cross reference for %M0343
           |  Filter      Delay                                  -] [- 117
M103       |  stop        stop                                   -]/[- 118
running    |  cond.       counter
           |  counter     photoc.
%M0336     |
 0090 ---|/|---%R1104 -PV  %R1106 -PV
                %R0469       %R0472

Queue                                                            << RUNG 116  STEP #0404 >>
photo.
M104
 B108
%I0040                                                   %M0344
 ---| |---[OFDT 0.01s]---[TMR 0.10s]---------------------( )--  (* Stop cond M104 *)
                                                                 Cross reference for %M0344
Filter      Delay                                                -] [- 117
stop        stop
cond.       queue
queue       photoc.
%R1105 -PV  %R1012 -PV
            %R0475      %R0478

Stop   Stop                                                      << RUNG 117  STEP #0408 >>
cond   cond
M104   M104
%M0343 %M0344                                            %M0345
 0115 ---| |---| |---------------------------------------(S)--  (* Stop M104 *)
                                                                 Cross reference for %M0345
                                                                 -] [- 135
                                                                 -(R)  118

Stop                                                             << RUNG 118  STEP #0411 >>
cond
M104
%M0343                                                   %M0345
 0115 ---|/|---[TMR 0.10s]-----------------------------(R)--  (* Stop M104 *)
                                                                 Cross reference for %M0345
Delay                                                            -] [- 135
restart                                                          -(S)  117
motor
%R1108 -PV
          %R0481
```

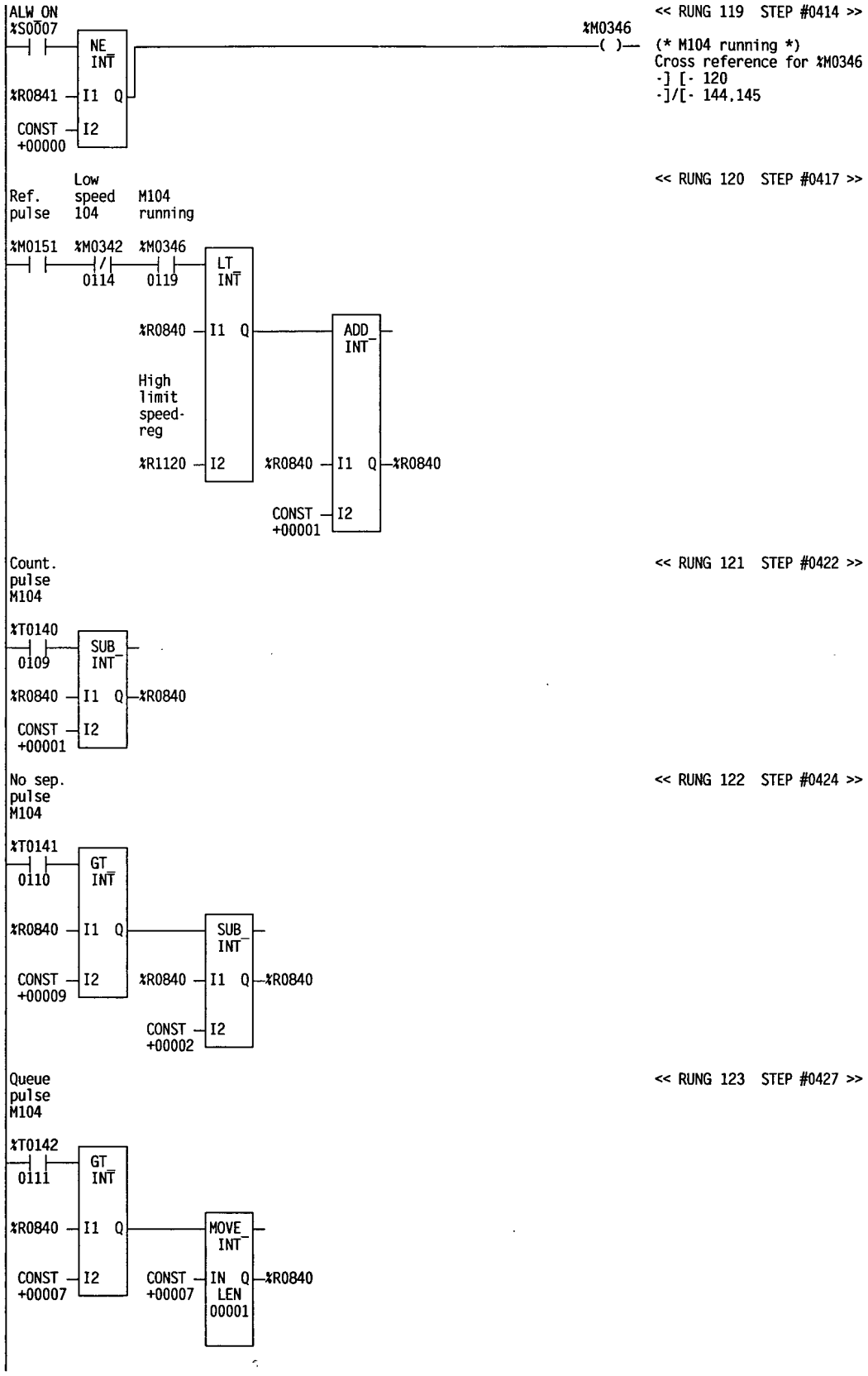
ALW_ON
%S0007
NE_INT
%R0841
I1
Q
CONST
+00000
I2
%M0346
<< RUNG 119 STEP #0414 >>
(* M104 running *)
Cross reference for %M0346
-] [- 120
-]/[- 144,145
Ref. pulse
Low speed 104
M104 running
%M0151
%M0342
%M0346
0114
0119
LT_INT
%R0840
High limit speed-reg
%R1120
ADD_INT
CONST
+00001
<< RUNG 120 STEP #0417 >>
Count. pulse M104
%T0140
0109
SUB_INT
<< RUNG 121 STEP #0422 >>
No sep. pulse M104
%T0141
0110
GT_INT
<< RUNG 122 STEP #0424 >>
Queue pulse M104
%T0142
0111
MOVE_INT
IN
LEN
00001
<< RUNG 123 STEP #0427 >>

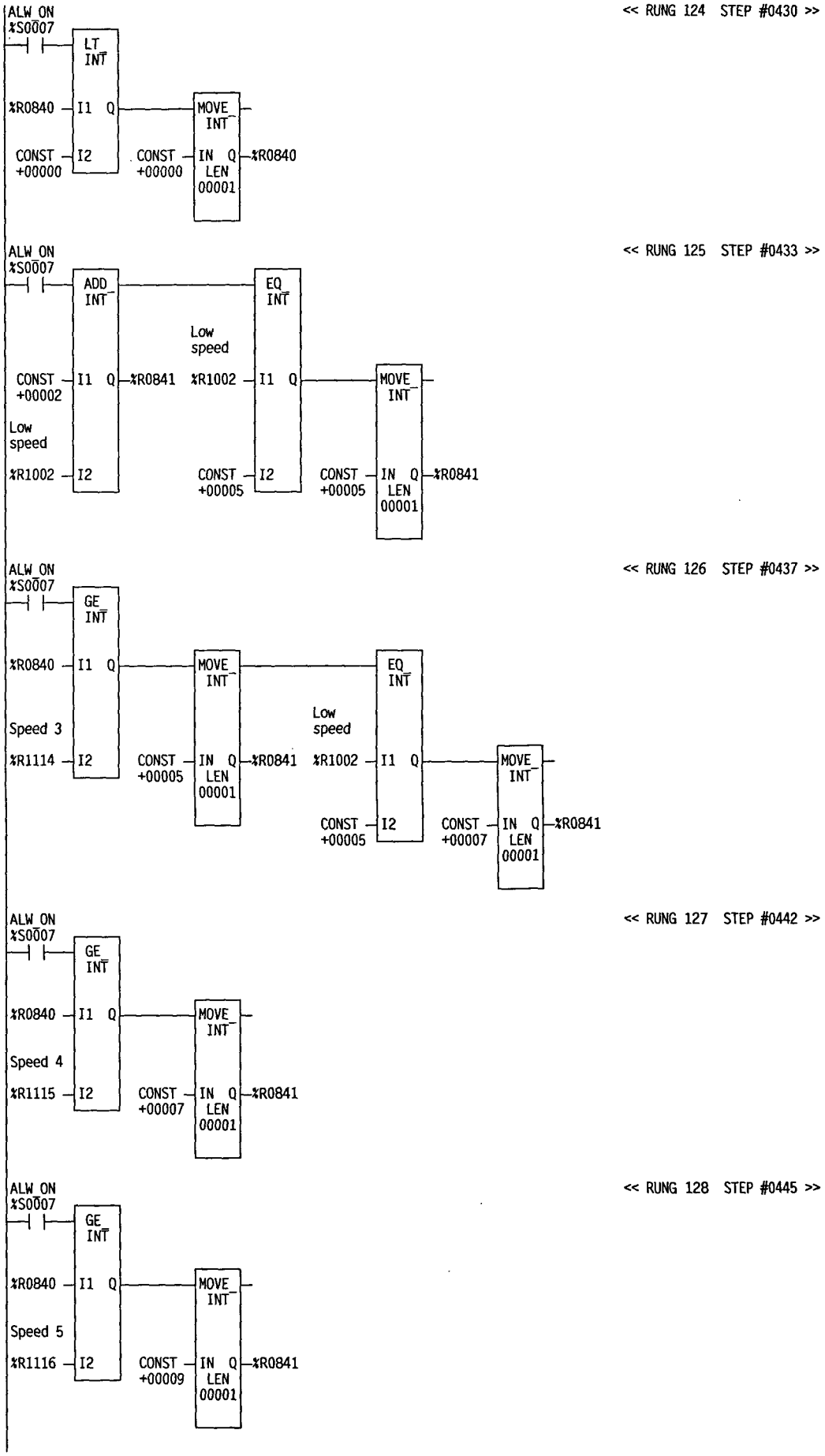
<< RUNG 124 STEP #0430 >>
ALW_ON
%S0007
LT_INT
%R0840
I1 Q
CONST +00000
I2
MOVE_INT
CONST +00000
IN Q
LEN 00001
%R0840
<< RUNG 125 STEP #0433 >>
ALW_ON
%S0007
ADD_INT
CONST +00002
I1 Q
%R0841
Low speed
%R1002
I2
EQ_INT
Low speed
%R1002
I1 Q
CONST +00005
I2
MOVE_INT
CONST +00005
IN Q
LEN 00001
%R0841
<< RUNG 126 STEP #0437 >>
ALW_ON
%S0007
GE_INT
%R0840
I1 Q
Speed 3
%R1114
I2
MOVE_INT
CONST +00005
IN Q
LEN 00001
%R0841
EQ_INT
Low speed
%R1002
I1 Q
CONST +00005
I2
MOVE_INT
CONST +00007
IN Q
LEN 00001
%R0841
<< RUNG 127 STEP #0442 >>
ALW_ON
%S0007
GE_INT
%R0840
I1 Q
Speed 4
%R1115
I2
MOVE_INT
CONST +00007
IN Q
LEN 00001
%R0841
<< RUNG 128 STEP #0445 >>
ALW_ON
%S0007
GE_INT
%R0840
I1 Q
Speed 5
%R1116
I2
MOVE_INT
CONST +00009
IN Q
LEN 00001
%R0841

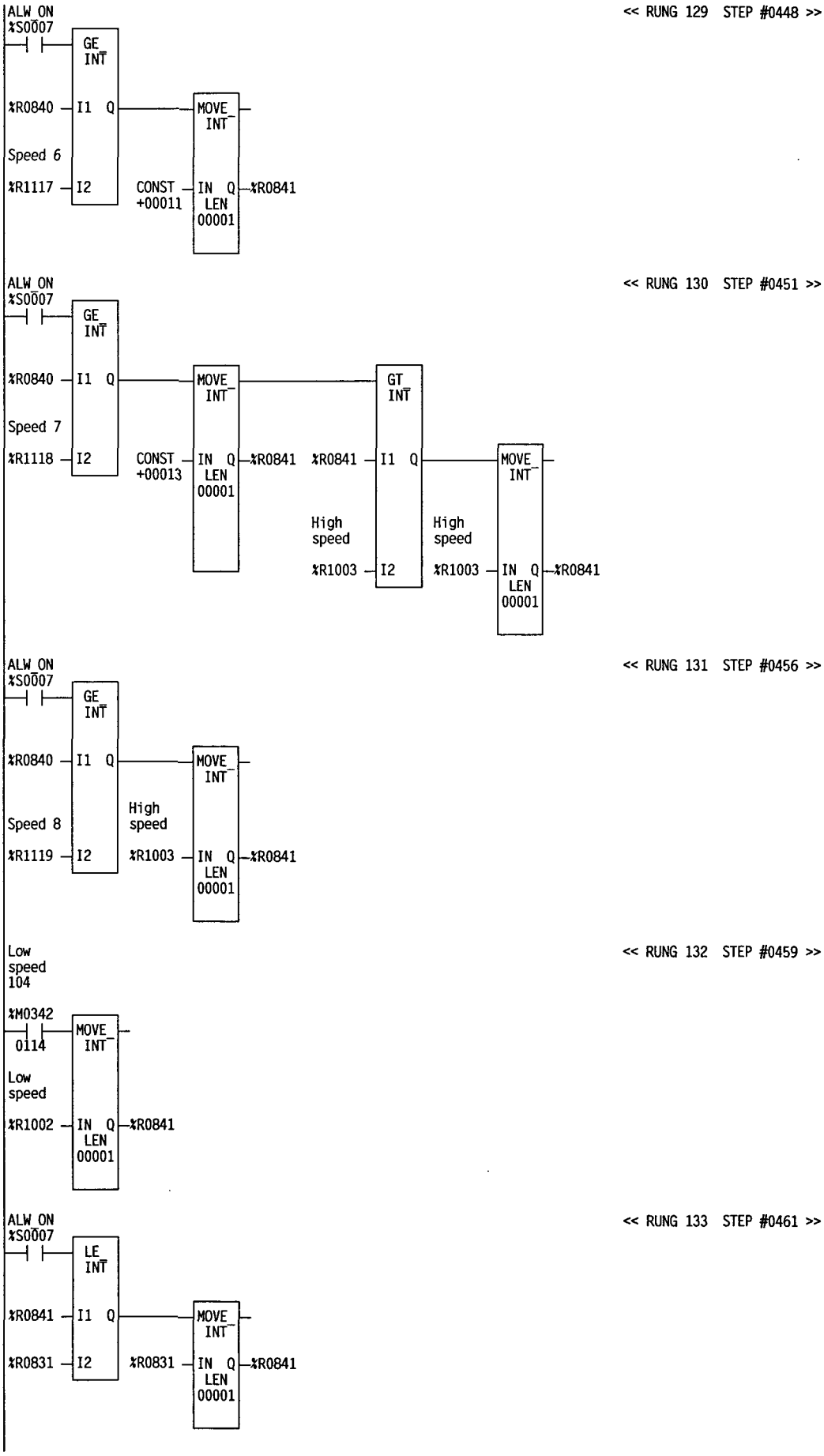
<< RUNG 129 STEP #0448 >>
ALW ON
%S0007
GE INT
%R0840
I1 Q
Speed 6
%R1117
I2
CONST +00011
MOVE INT
IN Q
LEN 00001
%R0841
<< RUNG 130 STEP #0451 >>
ALW ON
%S0007
GE INT
%R0840
I1 Q
Speed 7
%R1118
I2
CONST +00013
MOVE INT
IN Q
LEN 00001
%R0841
%R0841
GT INT
I1 Q
High speed
%R1003
I2
High speed
%R1003
MOVE INT
IN Q
LEN 00001
%R0841
<< RUNG 131 STEP #0456 >>
ALW ON
%S0007
GE INT
%R0840
I1 Q
Speed 8
%R1119
I2
High speed
%R1003
MOVE INT
IN Q
LEN 00001
%R0841
<< RUNG 132 STEP #0459 >>
Low speed 104
%M0342
0114
MOVE INT
Low speed
%R1002
IN Q
LEN 00001
%R0841
<< RUNG 133 STEP #0461 >>
ALW ON
%S0007
LE INT
%R0841
I1 Q
%R0831
I2
%R0831
MOVE INT
IN Q
LEN 00001
%R0841

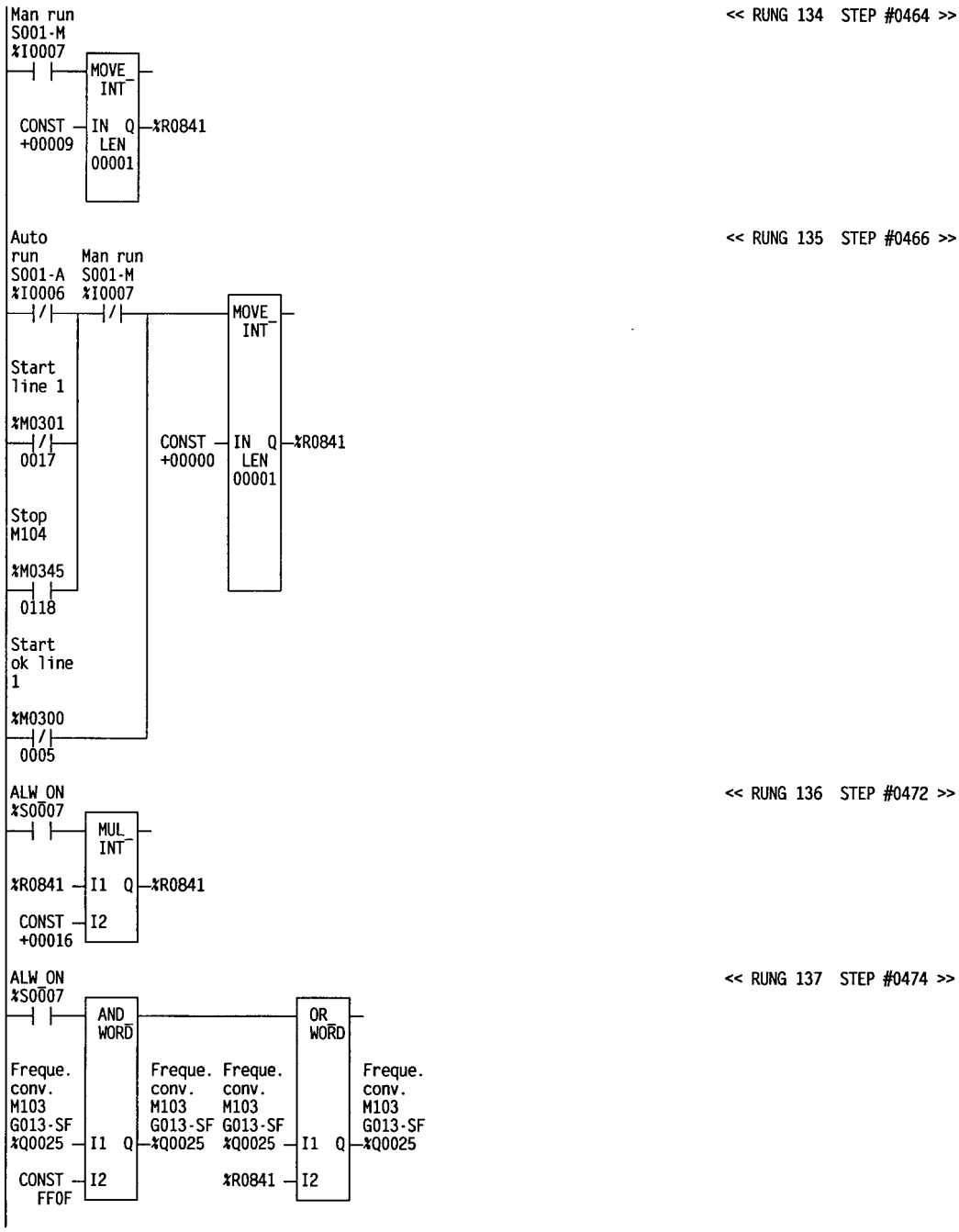
<< RUNG 134 STEP #0464 >>
Man run
S001-M
%I0007
MOVE_INT
CONST +00009
IN Q
LEN 00001
%R0841
<< RUNG 135 STEP #0466 >>
Auto run S001-A %I0006
Man run S001-M %I0007
Start line 1
%M0301
0017
Stop M104
%M0345
0118
Start ok line 1
%M0300
0005
MOVE_INT
CONST +00000
IN Q
LEN 00001
%R0841
<< RUNG 136 STEP #0472 >>
ALW_ON
%S0007
MUL_INT
%R0841
I1 Q
CONST +00016
I2
<< RUNG 137 STEP #0474 >>
ALW_ON
%S0007
AND_WORD
Freque. conv. M103 G013-SF %Q0025
I1 Q
CONST FF0F
I2
Freque. conv. M103 G013-SF %Q0025
Freque. conv. M103 G013-SF %Q0025
%R0841
OR_WORD
I1 Q
I2
Freque. conv. M103 G013-SF %Q0025

```
(*************************************************************************)
(*                                                                       *)
(* MOTOR 105                                                             *)
(*                                                                       *)
(*************************************************************************)

Count.                                                          << RUNG 139  STEP #0478 >>
photo.
M105
 B109
%I0041                                                  %T0150
 ─┤ ├─ TMR ──────────────────────────────────────────────(^)──  (* Count.  pulse M105 *)
        0.01s                                                    Cross reference for %T0150
                                                                 -] [- 151
Counter
pulse

%R1100 ─PV

        %R0500

Count.                                                          << RUNG 140  STEP #0481 >>
photo.
M105
 B109
%I0041                                                  %T0151
 ─┤ ├─ TMR ──────────────────────────────────────────────(^)──  (* No sep. pulse M105 *)
        0.10s                                                    Cross reference for %T0151
                                                                 -] [- 152
No sep.
pulse

%R1101 ─PV

        %R0503

Low                                                             << RUNG 141  STEP #0484 >>
speed
M105

%M0352                                                  %T0152
 ─┤ ├─ TMR ──────────────────────────────────────────────(^)──  (* Queue   pulse M105 *)
  0144  0.10s                                                    Cross reference for %T0152
                                                                 -] [- 153
Forced
low
speed
pulse

%R1102 ─PV

        %R0506

ALW OFF                                                         << RUNG 142  STEP #0487 >>
%S0008                                                  %M0350
 ─┤ ├─ TMR ──────────────────────────────────────────────( )──  (* Cond. low speed M105 *)
        0.10s                                                    Cross reference for %M0350
                                                                 -] [- 144
Low
speed
queue
photoc.

%R1107 ─PV

        %R0515

Count.                                                          << RUNG 143  STEP #0490 >>
photo.
M105
 B109
%I0041                                                  %M0351
 ─┤ ├─ TMR ──────────────────────────────────────────────( )──  (* Cond. low speed M105 *)
        0.10s                                                    Cross reference for %M0351
                                                                 -] [- 144
Low
speed
counter
photoc.

%R1103 ─PV

        %R0518
```

M104
running

<< RUNG 144 STEP #0493 >>

%M0346 — 0119 Cond. low speed M105
%M0350 — 0142 Cond. low speed M105
%M0351 — 0143
%M0352 ( )

(* Low speed M105 *)
Cross reference for %M0352
-] [- 141,162
-]/[- 150

Count. photo. M105
B109
%I0041

<< RUNG 145 STEP #0497 >>

M104 running %M0346 — 0119
Filter stop cond. counter %R1104 — OFDT 0.01s — %R0521
Delay stop counter photoc. %R1106 — TMR 0.10s — %R0524
%M0353 ( )

(* Stop cond M105 *)
Cross reference for %M0353
-] [- 147
-]/[- 148

Queue photo. M105
B110
%I0042

<< RUNG 146 STEP #0502 >>

Filter stop cond. queue %R1105 — OFDT 0.01s — %R0527
Delay stop queue photoc. %R1012 — TMR 0.10s — %R0530
%M0354 ( )

(* Stop cond. M105 *)
Cross reference for %M0354
-] [- 147

Stop cond M105
Stop cond. M105

<< RUNG 147 STEP #0506 >>

%M0353 — 0145
%M0354 — 0146
%M0355 (S)

(* Stop M105 *)
Cross reference for %M0355
-] [- 165
-(R) 148

Stop cond M105

<< RUNG 148 STEP #0509 >>

%M0353 — 0145
Delay restart motor %R1108 — TMR 0.10s — %R0533
%M0355 (R)

(* Stop M105 *)
Cross reference for %M0355
-] [- 165
-(S) 147

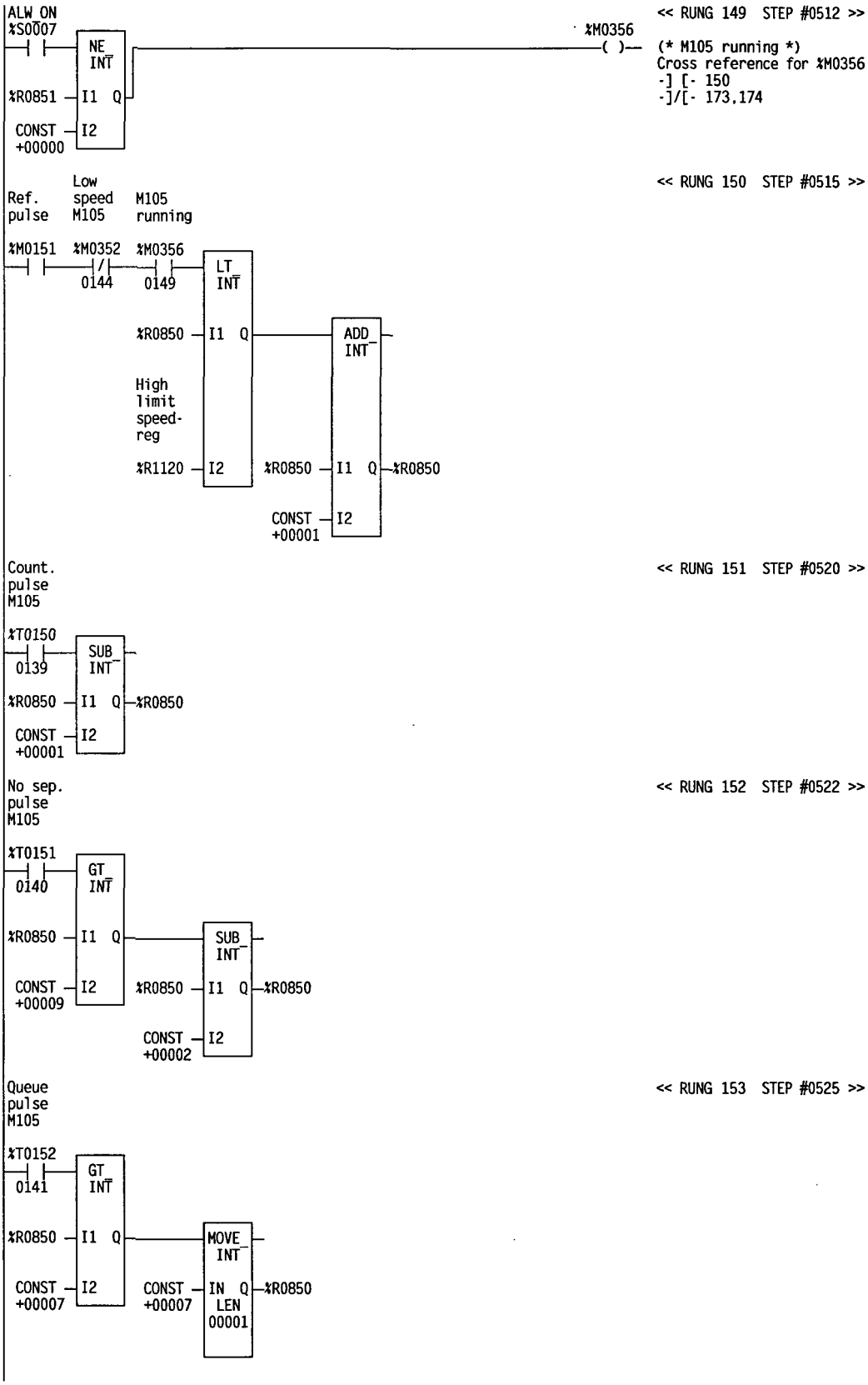
ALW_ON
%S0007
NE_INT
%R0851
I1
Q
CONST
+00000
I2
%M0356
( )
<< RUNG 149 STEP #0512 >>
(* M105 running *)
Cross reference for %M0356
-] [- 150
-]/[- 173,174
Ref. pulse
Low speed M105
M105 running
%M0151
%M0352
%M0356
0144
0149
LT_INT
%R0850
High limit speed-reg
%R1120
ADD_INT
%R0850
CONST
+00001
<< RUNG 150 STEP #0515 >>
Count. pulse M105
%T0150
0139
SUB_INT
<< RUNG 151 STEP #0520 >>
No sep. pulse M105
%T0151
0140
GT_INT
<< RUNG 152 STEP #0522 >>
Queue pulse M105
%T0152
0141
<< RUNG 153 STEP #0525 >>
MOVE_INT
IN
LEN
00001

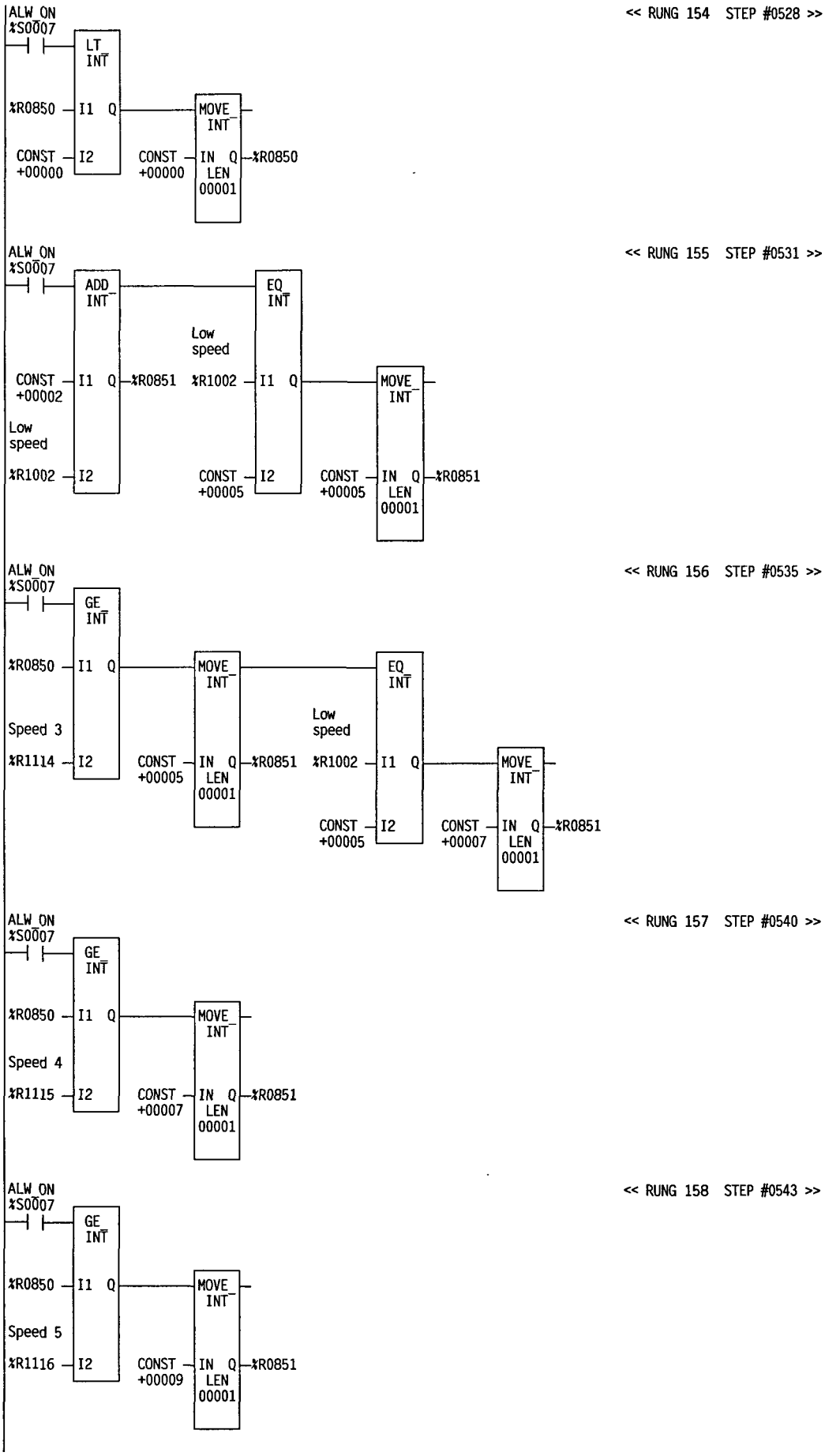
<< RUNG 154 STEP #0528 >>
ALW_ON
%S0007
LT_INT
%R0850
I1
Q
CONST
+00000
I2
MOVE_INT
CONST
+00000
IN
Q
%R0850
LEN
00001
<< RUNG 155 STEP #0531 >>
ALW_ON
%S0007
ADD_INT
CONST
+00002
I1
Q
%R0851
Low
speed
%R1002
I2
EQ_INT
Low
speed
%R1002
I1
Q
CONST
+00005
I2
MOVE_INT
CONST
+00005
IN
Q
%R0851
LEN
00001
<< RUNG 156 STEP #0535 >>
ALW_ON
%S0007
GE_INT
%R0850
I1
Q
Speed 3
%R1114
I2
MOVE_INT
CONST
+00005
IN
Q
%R0851
LEN
00001
EQ_INT
Low
speed
%R1002
I1
Q
CONST
+00005
I2
MOVE_INT
CONST
+00007
IN
Q
%R0851
LEN
00001
<< RUNG 157 STEP #0540 >>
ALW_ON
%S0007
GE_INT
%R0850
I1
Q
Speed 4
%R1115
I2
MOVE_INT
CONST
+00007
IN
Q
%R0851
LEN
00001
<< RUNG 158 STEP #0543 >>
ALW_ON
%S0007
GE_INT
%R0850
I1
Q
Speed 5
%R1116
I2
MOVE_INT
CONST
+00009
IN
Q
%R0851
LEN
00001

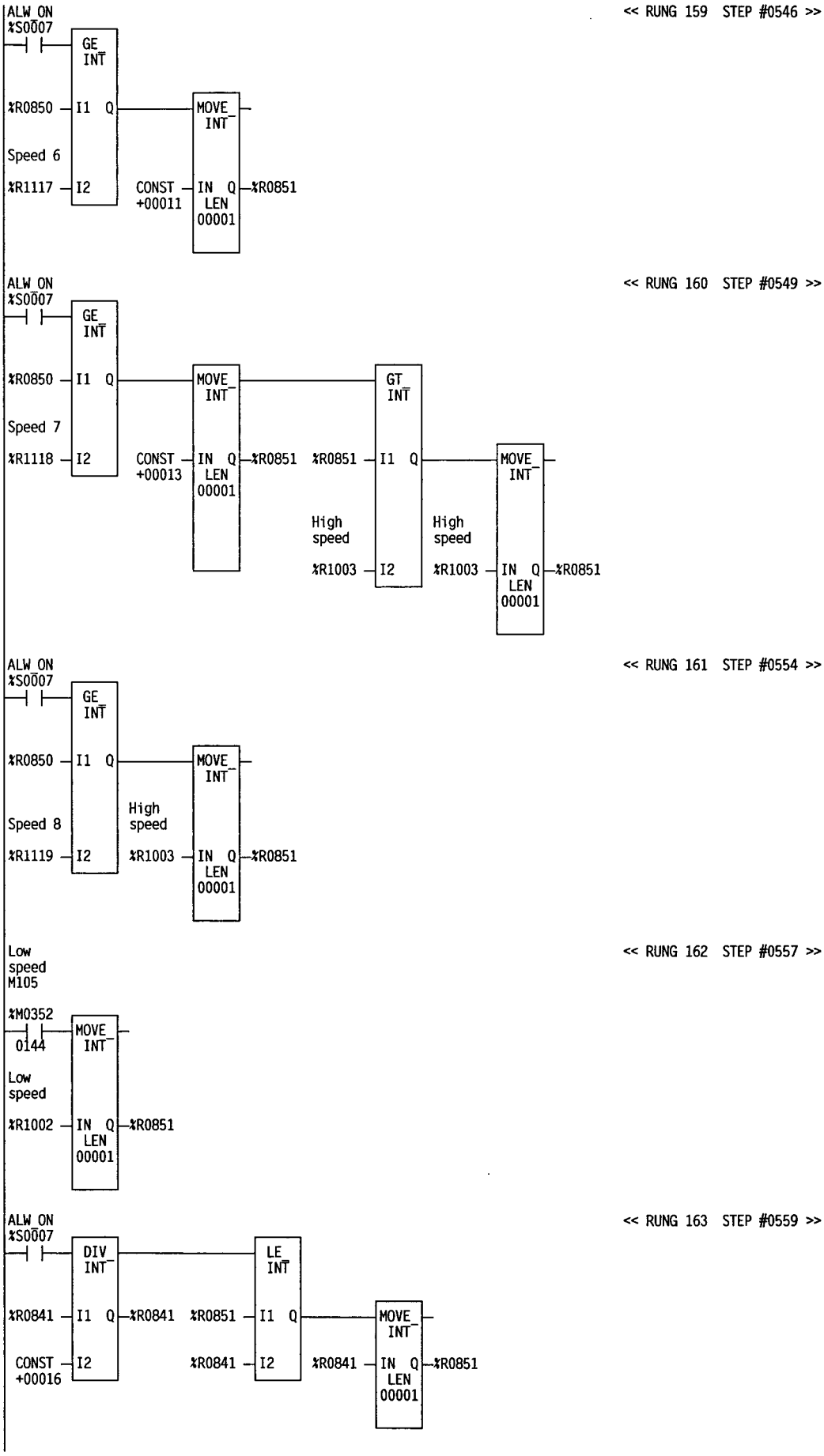
<< RUNG 159 STEP #0546 >>
ALW_ON
%S0007
GE_INT
%R0850
I1 Q
Speed 6
%R1117
I2
MOVE_INT
CONST +00011
IN Q
LEN 00001
%R0851
<< RUNG 160 STEP #0549 >>
ALW_ON
%S0007
GE_INT
%R0850
I1 Q
Speed 7
%R1118
I2
MOVE_INT
CONST +00013
IN Q
LEN 00001
%R0851
%R0851
GT_INT
I1 Q
High speed
%R1003
I2
High speed
%R1003
MOVE_INT
IN Q
LEN 00001
%R0851
<< RUNG 161 STEP #0554 >>
ALW_ON
%S0007
GE_INT
%R0850
I1 Q
Speed 8
%R1119
I2
MOVE_INT
High speed
%R1003
IN Q
LEN 00001
%R0851
<< RUNG 162 STEP #0557 >>
Low speed M105
%M0352
0144
MOVE_INT
Low speed
%R1002
IN Q
LEN 00001
%R0851
<< RUNG 163 STEP #0559 >>
ALW_ON
%S0007
DIV_INT
%R0841
I1 Q
%R0841
CONST +00016
I2
LE_INT
%R0851
I1 Q
%R0841
I2
MOVE_INT
%R0841
IN Q
LEN 00001
%R0851

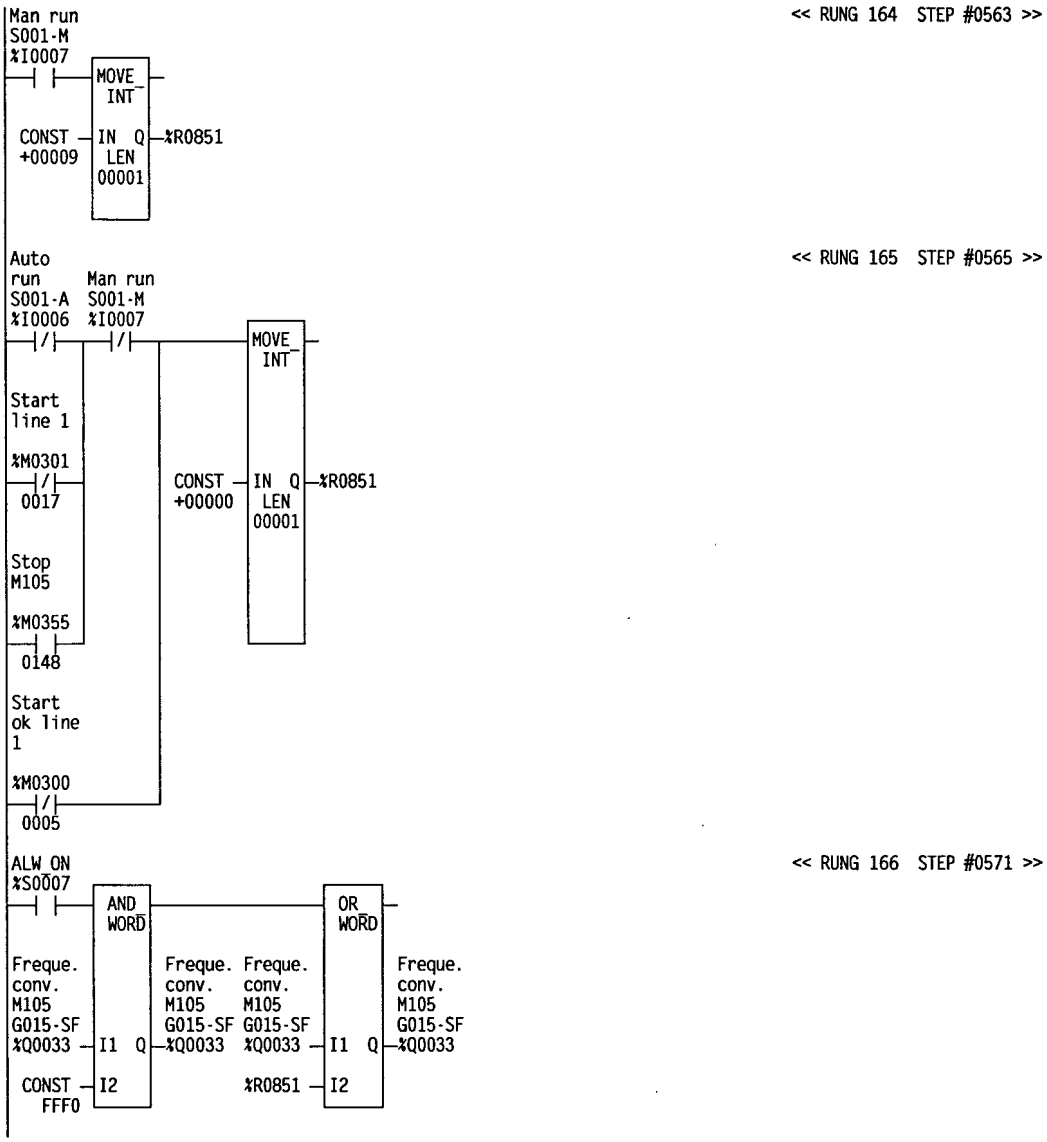
<< RUNG 164 STEP #0563 >>
Man run
S001-M
%I0007
MOVE INT
CONST +00009
IN Q
LEN 00001
%R0851
<< RUNG 165 STEP #0565 >>
Auto run
S001-A
%I0006
Man run
S001-M
%I0007
Start line 1
%M0301
0017
Stop M105
%M0355
0148
Start ok line 1
%M0300
0005
MOVE INT
CONST +00000
IN Q
LEN 00001
%R0851
<< RUNG 166 STEP #0571 >>
ALW ON
%S0007
AND WORD
Freque. conv. M105 G015-SF
%Q0033
I1 Q
CONST FFF0
I2
Freque. conv. M105 G015-SF
%Q0033
OR WORD
Freque. conv. M105 G015-SF
%Q0033
%R0851
I1 Q
I2
Freque. conv. M105 G015-SF
%Q0033

```
(*************************************************************************)
(*                                                                       *)
(* MOTOR 106                                                             *)
(*                                                                       *)
(*************************************************************************)

Count.                                                    << RUNG 168  STEP #0575 >>
photo.
M106
 B111
%I0043                                          %T0160
-| |-  TMR                                      -(^)-  (* Count.  pulse M106          *)
      0.01s                                             Cross reference for %T0160
                                                        -] [- 180
Counter
pulse
%R1100 -PV

      %R0551

Count.                                                    << RUNG 169  STEP #0578 >>
photo.
M106
 B111
%I0043                                          %T0161
-| |-  TMR                                      -(^)-  (* No sep. pulse M106          *)
      0.10s                                             Cross reference for %T0161
                                                        -] [- 181
No sep.
pulse
%R1101 -PV

      %R0554

Low                                                       << RUNG 170  STEP #0581 >>
speed
M106

%M0362                                          %T0162
-| |-  TMR                                      -(^)-  (* Queue   pulse M106          *)
 0173 0.10s                                             Cross reference for %T0162
                                                        -] [- 182
Forced
low
speed
pulse
%R1102 -PV

      %R0557

ALW_OFF                                                   << RUNG 171  STEP #0584 >>
%S0008                                          %M0360
-| |-  TMR                                      -( )-  (* Cond. low speed M106        *)
      0.10s                                             Cross reference for %M0360
                                                        -] [- 173
Low
speed
queue
photoc.
%R1107 -PV

      %R0563

Count.                                                    << RUNG 172  STEP #0587 >>
photo.
M106
 B111
%I0043                                          %M0361
-| |-  TMR                                      -( )-  (* Cond. low speed M106        *)
      0.10s                                             Cross reference for %M0361
                                                        -] [- 173
Low
speed
counter
photoc.
%R1103 -PV

      %R0566
```

```
M105
running                                                          << RUNG 173  STEP #0590 >>

%M0356                                                   %M0362
 0149 ---|/|-------------------------------------------------( )--  (* Low speed M106                    *)
Cond.                                                             Cross reference for %M0362
low                                                               -] [- 170,191
speed                                                             -]/[- 179
M106
%M0360
 0171 ---| |
Cond.
low
speed
M106
%M0361
 0172 ---| |

Count.                                                           << RUNG 174  STEP #0594 >>
photo.
M106
 B111
%I0043                                                   %M0363
 ---| |---+---[OFDT 0.01s]---[TMR 0.10s]-----------------------( )--  (* Stop cond M106                    *)
           |                                                      Cross reference for %M0363
           |  Filter stop cond. counter   Delay stop counter photoc.  -] [- 176
M105       |                                                      -]/[- 177
running    |
%M0356     |  %R1104 -PV                  %R1106 -PV
 0149 ---|/|
           |
           |  %R0569                      %R0572

Queue                                                            << RUNG 175  STEP #0599 >>
photo.
M106
 B112
%I0044                                                   %M0364
 ---| |---[OFDT 0.01s]---[TMR 0.10s]---------------------------( )--  (* Stop cond. M106                   *)
           Filter stop cond. queue      Delay stop queue photoc.  Cross reference for %M0364
           %R1105 -PV                   %R1012 -PV                -] [- 176

           %R0575                       %R0578

Stop      Stop                                                   << RUNG 176  STEP #0603 >>
cond      cond.
M106      M106

%M0363    %M0364                                         %M0365
 0174 ---| |---| |-------------------------------------------(S)--  (* Stop M106 *)
           0175                                                   Cross reference for %M0365
                                                                  -] [- 194
                                                                  -(R)  177

Stop                                                             << RUNG 177  STEP #0606 >>
cond
M106

%M0363                                                   %M0365
 0174 ---|/|---[TMR 0.10s]-----------------------------------(R)--  (* Stop M106 *)
                                                                  Cross reference for %M0365
Delay                                                             -] [- 194
restart                                                           -(S)  176
motor
%R1108 -PV

%R0581
```

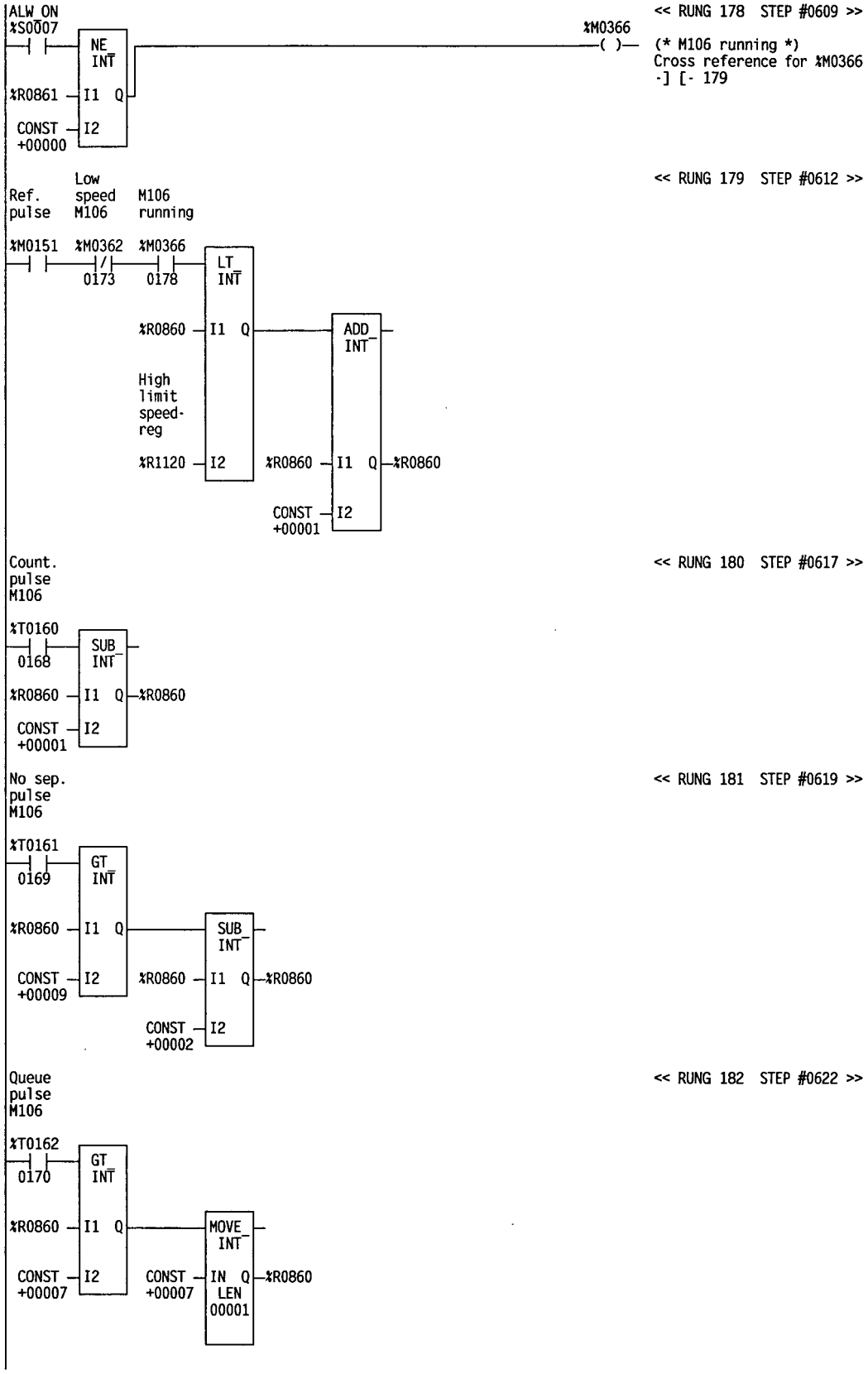
ALW_ON
%S0007
NE_INT
%R0861
I1
Q
CONST
+00000
I2
%M0366
( )
<< RUNG 178 STEP #0609 >>
(* M106 running *)
Cross reference for %M0366
-] [- 179
Ref. pulse
Low speed M106
M106 running
%M0151
%M0362
0173
%M0366
0178
LT_INT
%R0860
I1
Q
High limit speed-reg
%R1120
I2
ADD_INT
%R0860
I1
Q
%R0860
CONST
+00001
I2
<< RUNG 179 STEP #0612 >>
Count. pulse M106
%T0160
0168
SUB_INT
%R0860
I1
Q
%R0860
CONST
+00001
I2
<< RUNG 180 STEP #0617 >>
No sep. pulse M106
%T0161
0169
GT_INT
%R0860
I1
Q
CONST
+00009
I2
SUB_INT
%R0860
I1
Q
%R0860
CONST
+00002
I2
<< RUNG 181 STEP #0619 >>
Queue pulse M106
%T0162
0170
GT_INT
%R0860
I1
Q
CONST
+00007
I2
MOVE_INT
CONST
+00007
IN
Q
%R0860
LEN
00001
<< RUNG 182 STEP #0622 >>

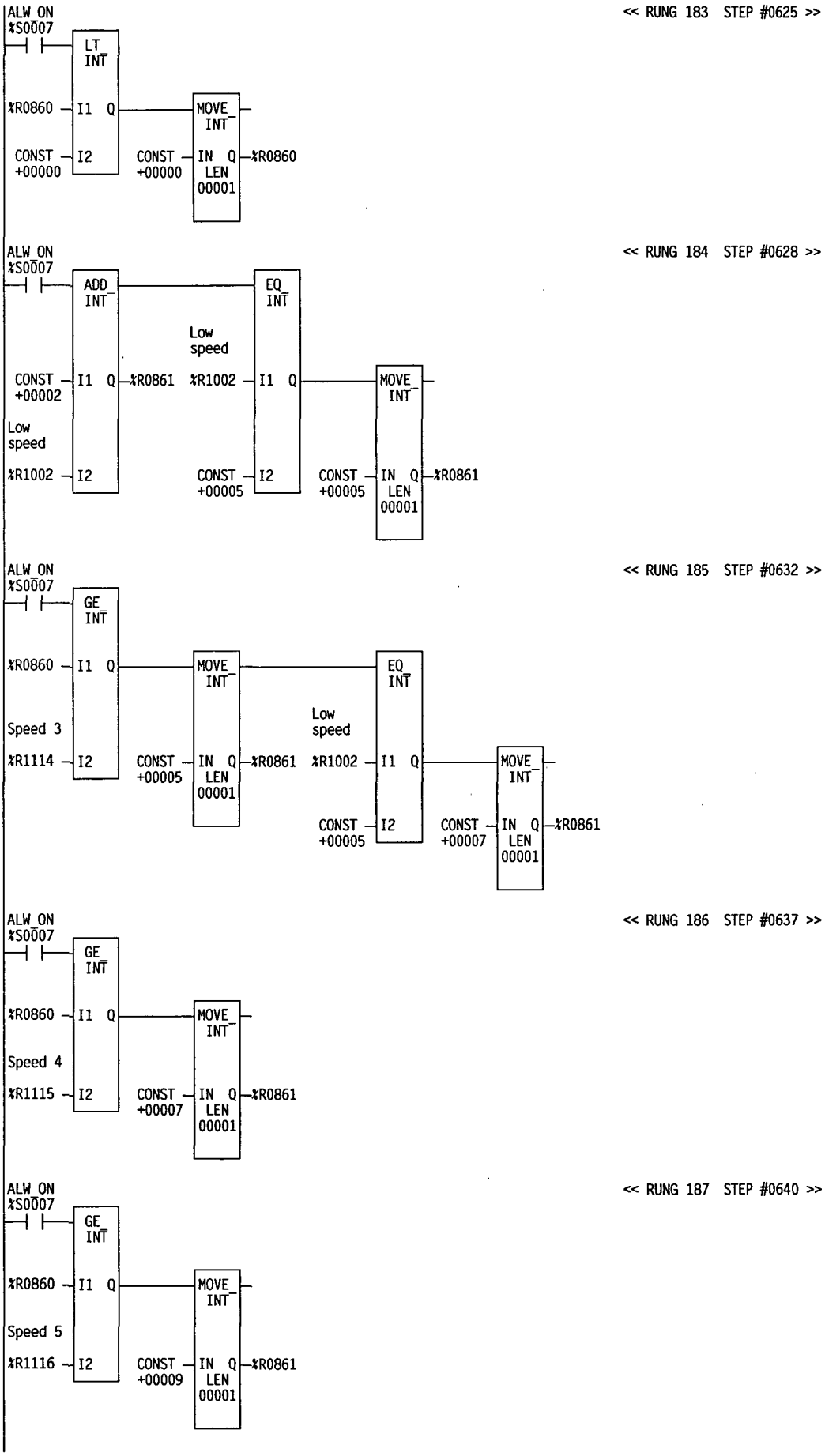
<< RUNG 183 STEP #0625 >>
ALW_ON
%S0007
LT_INT
%R0860
I1 Q
CONST +00000
I2
MOVE_INT
CONST +00000
IN Q
LEN 00001
%R0860
<< RUNG 184 STEP #0628 >>
ALW_ON
%S0007
ADD_INT
CONST +00002
I1 Q
%R0861
Low speed
%R1002
I2
EQ_INT
Low speed
%R1002
I1 Q
CONST +00005
I2
MOVE_INT
CONST +00005
IN Q
LEN 00001
%R0861
<< RUNG 185 STEP #0632 >>
ALW_ON
%S0007
GE_INT
%R0860
I1 Q
Speed 3
%R1114
I2
MOVE_INT
CONST +00005
IN Q
LEN 00001
%R0861
EQ_INT
Low speed
%R1002
I1 Q
CONST +00005
I2
MOVE_INT
CONST +00007
IN Q
LEN 00001
%R0861
<< RUNG 186 STEP #0637 >>
ALW_ON
%S0007
GE_INT
%R0860
I1 Q
Speed 4
%R1115
I2
MOVE_INT
CONST +00007
IN Q
LEN 00001
%R0861
<< RUNG 187 STEP #0640 >>
ALW_ON
%S0007
GE_INT
%R0860
I1 Q
Speed 5
%R1116
I2
MOVE_INT
CONST +00009
IN Q
LEN 00001
%R0861

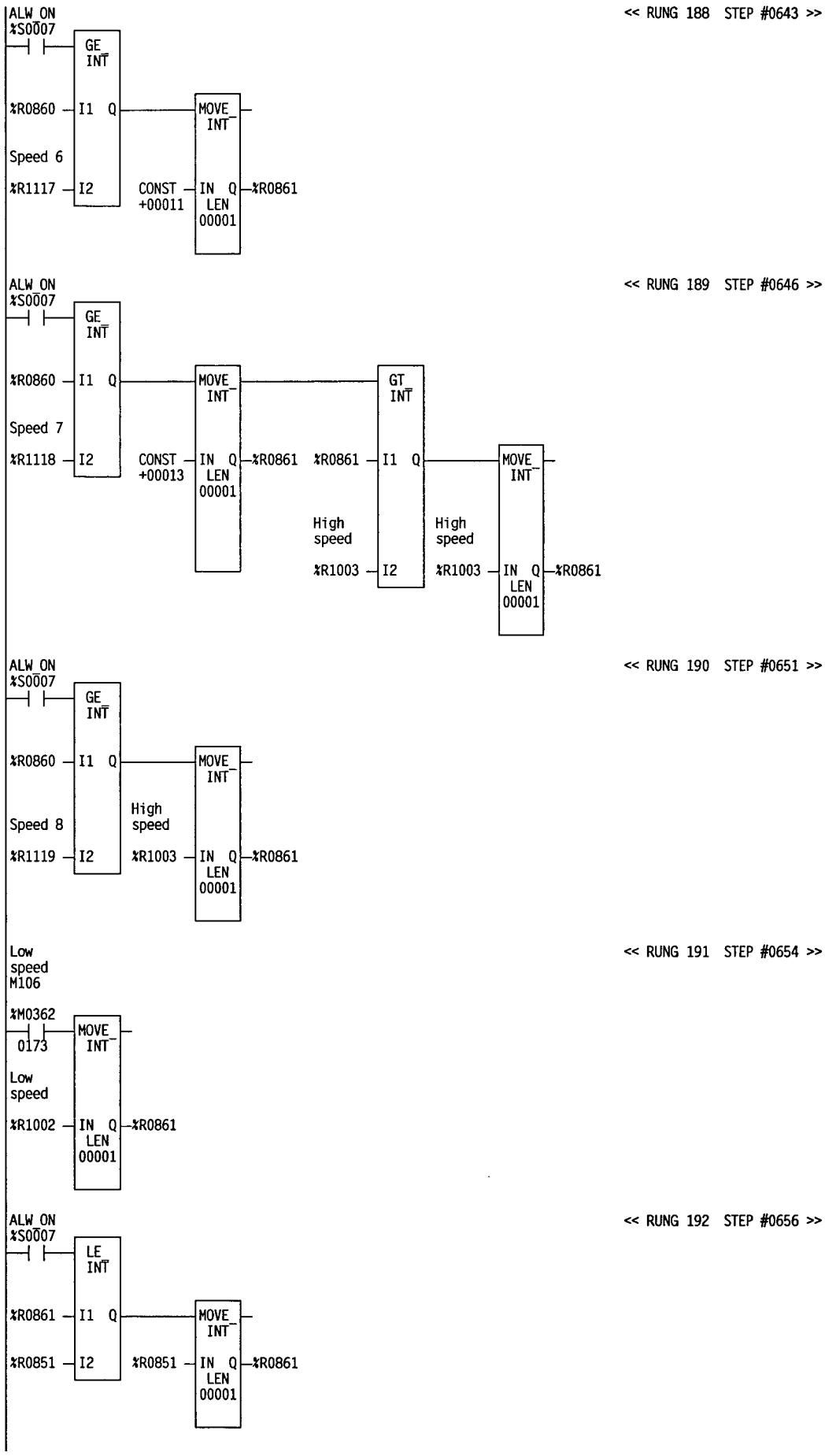
ALW_ON
%S0007
GE_INT
%R0860
I1
Q
Speed 6
%R1117
I2
MOVE_INT
CONST +00011
IN
Q
LEN 00001
%R0861
<< RUNG 188 STEP #0643 >>
ALW_ON
%S0007
GE_INT
%R0860
I1
Q
Speed 7
%R1118
I2
MOVE_INT
CONST +00013
IN
Q
LEN 00001
%R0861
GT_INT
%R0861
I1
Q
High speed
%R1003
I2
MOVE_INT
High speed
%R1003
IN
Q
LEN 00001
%R0861
<< RUNG 189 STEP #0646 >>
ALW_ON
%S0007
GE_INT
%R0860
I1
Q
Speed 8
%R1119
I2
MOVE_INT
High speed
%R1003
IN
Q
LEN 00001
%R0861
<< RUNG 190 STEP #0651 >>
Low speed M106
%M0362
0173
MOVE_INT
Low speed
%R1002
IN
Q
LEN 00001
%R0861
<< RUNG 191 STEP #0654 >>
ALW_ON
%S0007
LE_INT
%R0861
I1
Q
%R0851
I2
MOVE_INT
%R0851
IN
Q
LEN 00001
%R0861
<< RUNG 192 STEP #0656 >>

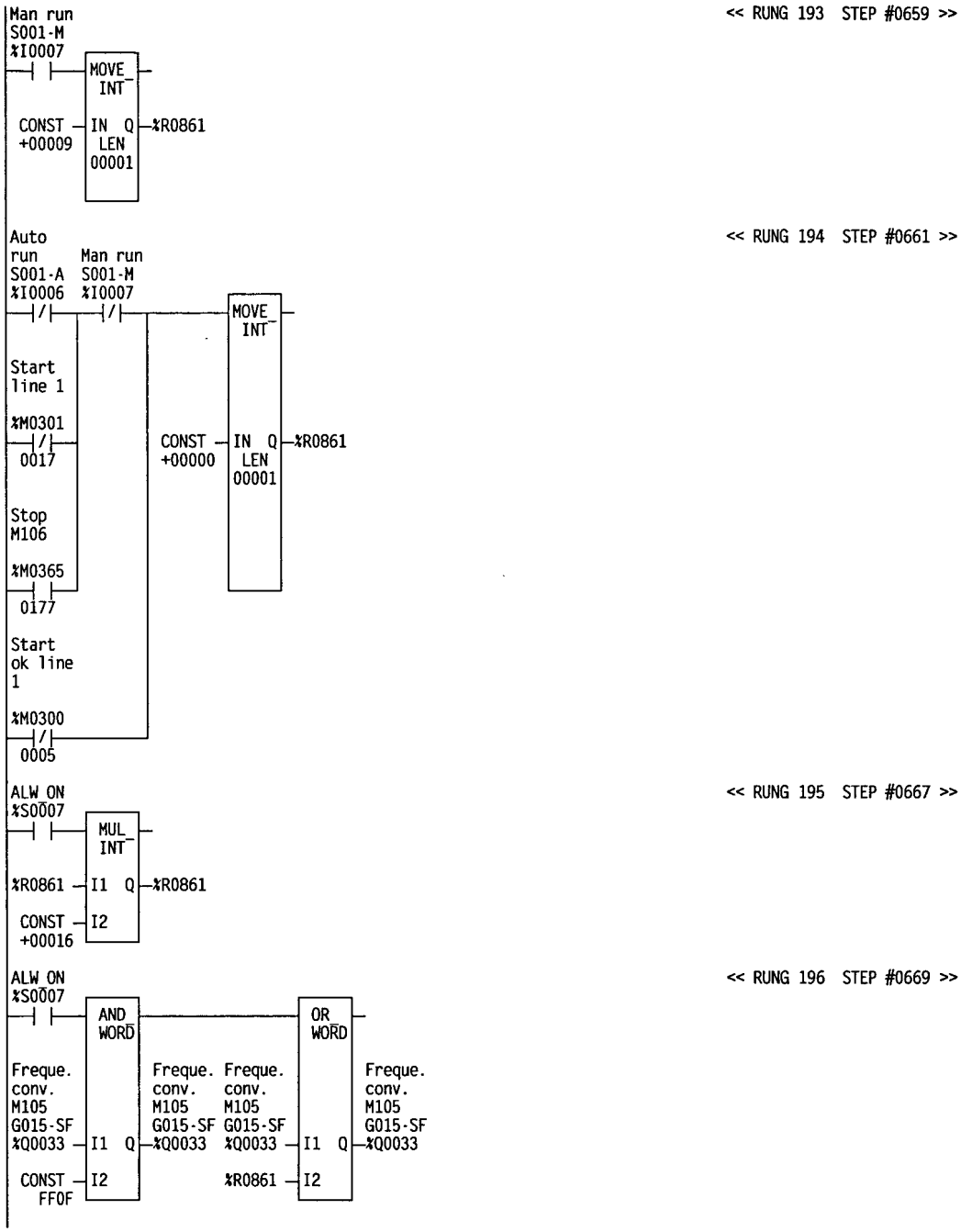
<< RUNG 193 STEP #0659 >>
Man run
S001-M
%I0007
MOVE INT
CONST +00009
IN Q
LEN 00001
%R0861
<< RUNG 194 STEP #0661 >>
Auto run
S001-A
%I0006
Man run
S001-M
%I0007
Start line 1
%M0301
0017
Stop M106
%M0365
0177
Start ok line 1
%M0300
0005
MOVE INT
CONST +00000
IN Q
LEN 00001
%R0861
<< RUNG 195 STEP #0667 >>
ALW ON
%S0007
MUL INT
%R0861
I1 Q
CONST +00016
I2
<< RUNG 196 STEP #0669 >>
ALW ON
%S0007
AND WORD
Freque. conv. M105 G015-SF
%Q0033
I1 Q
CONST FF0F
I2
Freque. conv. M105 G015-SF
%Q0033
Freque. conv. M105 G015-SF
%Q0033
%R0861
OR WORD
I1 Q
I2
Freque. conv. M105 G015-SF
%Q0033

```
(*****************************************************************************)
(*                                                                           *)
(* MOTOR 111                                                                 *)
(*                                                                           *)
(*****************************************************************************)

Start   Stop                                                    << RUNG 198  STEP #0673 >>
photo.  photo.
M111    M111
 B131    B132
%I0053  %I0054                                   %M0375
 ─┤ ├────┤ ├──┬──┌─────┐──────────────────────────(S)──  (* Stop M111                    *)
                │  TMR │                                   Cross reference for %M0375
                │ 0.10s│                                   -]/[- 201
Layout          │      │                                   -(R)  199
4               │      │
%M0114          │      │
 ─┤/├──────────┼──────┼─ CONST ─PV
                │      │  +00010
                │      │
Switch          │      │
1               │      │
 B151           │      │
%I0057          │      │
 ─┤/├──────────┼──────┼─
                │      %R0600
                │
                Start                                           << RUNG 199  STEP #0679 >>
Switch  Layout  photo.
1       4       M111
 B151            B131
%I0057  %M0114  %I0053                           %M0375
 ─┤ ├────┤ ├────┤/├──┌─────┐──────────────────────────(R)──  (* Stop M111                    *)
                     │ OFDT │                                 Cross reference for %M0375
                     │ 0.10s│                                 -]/[- 201
                     │      │                                 -(S)  198
                CONST ─PV    │
                +00002       │
                     │      │
                     %R0603

Contact                                                         << RUNG 200  STEP #0684 >>
for
M111
 K011
%Q0042                                           %M0376
 ─┤ ├──────────────────────────────────────────────( )──  (* M111 running                 *)
 0201                                                       Cross reference for %M0376
                                                            -]/[- 24,26

                        Start                                   << RUNG 201  STEP #0686 >>
Auto    Start   Stop    ok line
run     line 1  M111    1
S001-A                                                   K011
%I0006  %M0301  %M0375  %M0300                           %Q0042
 ─┤ ├────┤ ├────┤/├────┤ ├──────────────────────────────( )──  (* Contact for M111             *)
         0017    0199    0005                                   Cross reference for K011
                                                                -] [- 200
Man run                                                         FBIO  (166),(196)
S001-M
%I0007
 ─┤ ├──────────────────┘
```

```
(*************************************************************************)
(*                                                                       *)
(* MOTOR 112                                                             *)
(*                                                                       *)
(*************************************************************************)

ALW OFF                                                   << RUNG 203  STEP #0693 >>
%S0008                                          %M0385
-| |-  TMR                                      -(S)-  (* Stop M112                    *)
      0.10s                                             Cross reference for %M0385
                                                        -]/[- 206
 CONST -PV                                              -(R)  204
 +00020

      %R0606

ALW ON                                                    << RUNG 204  STEP #0696 >>
%S0007                                          %M0385
-| |-  OFDT                                      -(R)-  (* Stop M112                    *)
      0.10s                                             Cross reference for %M0385
                                                        -]/[- 206
 CONST -PV                                              -(S)  203
 +00002

      %R0609

Contact                                                   << RUNG 205  STEP #0699 >>
for
M112
 K012
%Q0043                                          %M0386
-| |-                                           -( )-  (* M112 running                 *)
 0206                                                   Cross reference for %M0386
                                                                NONE

                                                          << RUNG 206  STEP #0701 >>
                        Start
Auto    Start   Stop    ok line
run     line 1  M112    1
S001-A                                           K012
%I0006  %M0301  %M0385  %M0300                   %Q0043
-| |-   -| |-   -|/|-   -| |-                   -( )-  (* Contact for M112              *)
         0017    0204    0005                           Cross reference for K012
                                                        -] [- 205
Man run                                                 FBIO  (166),(196)
S001-M
%I0007
-| |-

[    END OF SUBROUTINE LOGIC     ]
```

```
[  START LD SUBROUTINE   GREEN   ]

[     VARIABLE DECLARATIONS      ]

[   START OF SUBROUTINE LOGIC    ]

 >>>>
```

```
(*************************************************************************)
(*                                                                       *)
(* GREEN LAMP                                                            *)
(*                                                                       *)
(*************************************************************************)

        Ready          Start                                              << RUNG 5  STEP #0003 >>
Switch  signal  Auto   ok line
1       DE11    run    1
 B151    DE11   S001-A                                     H101_1
%I0057  %I0027 %I0006 %M0300                               %Q0009
 ─┤/├──────┤ ├──────┤ ├──────┤ ├──────────────────────────( )──  (* Ready signal green *)
                                                                   Cross reference for H101_1
        Ready                                                                NONE
Switch  signal
1       DE12
 B151    DE12
%I0057  %I0028
 ─┤ ├──────┤ ├──┐
                 │
        Layout   │
        4        │
                 │
        %M0114   │
         ─┤ ├────┘

Lamp
test
green

%M0501
 ─┤ ├──────────────────────────────────────────────────────────────────

[    END OF SUBROUTINE LOGIC     ]
```

```
[  START LD SUBROUTINE    EXT    ]

[     VARIABLE DECLARATIONS      ]

[   START OF SUBROUTINE LOGIC    ]

 >>>>
```

```
(*************************************************************************)
(*                                                                       *)
(* READY SIGNAL TO FILLER                                                *)
(*                                                                       *)
(*************************************************************************)

Stop                                                          << RUNG 5  STEP #0003 >>
M105

%M0355                                                  %M0302
 ─┤ ├─ TMR ──────────────────────────────────────────────( )─  (* Delay not ready                    *)
        0.10s                                                   Cross reference for %M0302
                                                                -]/[- 6
Delay
short
stop
%R1004 ─PV

        %R0203

Delay          Start                                          << RUNG 6  STEP #0006 >>
not     Auto   ok line
ready   run    1
        S001-A
%M0302  %I0006 %M0300                                   %M0303
 ─┤/├─  ─┤ ├─  ─┤ ├──────────────────────────────────────( )─  (* Ready signal                       *)
 0005                                                           Cross reference for %M0303
                                                                -] [- 7
Pack
coming
fill 1  Man run
  PC1   S001-M
%I0025  %I0007
 ─┤/├─  ─┤ ├─

Ready                                                         << RUNG 7  STEP #0013 >>
signal
                                                        K081
%M0303                                                  %Q0050
 ─┤ ├──────────────────────────────────────────────────( )─  (* Ready signal to filler             *)
 0006                                                           Cross reference for K081
                                                                         NONE
```

```
(*************************************************************************)
(*                                                                       *)
(* PACKAGE COMING TO DE                                                  *)
(*                                                                       *)
(*************************************************************************)

                                Ready                                   << RUNG 9  STEP #0016 >>
DE 11           Switch          signal
ready           1               DE11
                 B151            DE11
%T0108          %I0057          %I0027                          %M0411
 ─┤ ├──────────┤/├──────────┤ ├──┤OFDT├──────────────────────────( )─  (* Start infeed DE11                *)
                                                                         Cross reference for %M0411
                                                                         -] [- 12
          Queue
Layout    photo.
1         M102
           B104
%M0111    %I0036
 ─┤ ├──────┤ ├──┤
                                CONST ─PV
                                +00001

          Queue
Layout    photo.
1         M101
           B102
%M0111    %I0034
 ─┤/├─────┤ ├──┤
                                %R0245

                Ready                                                   << RUNG 10  STEP #0027 >>
DE 12           signal
ready   Switch  DE12
         B151    DE12
%T0109  %I0057  %I0028                                  %M0412
 ─┤ ├──┤ ├──────┤ ├──┤OFDT├──────────────────────────( )─  (* Start infeed DE12                *)
                                                                         Cross reference for %M0412
                                                                         -] [- 13
Queue
photo.
M101
 B102
%I0034
 ─┤ ├──┤
                                CONST ─PV
                                +00001

                                %R0248
```

```
(*************************************************************************)
(*                                                                       *)
(* START INFEED                                                          *)
(*                                                                       *)
(*************************************************************************)

        Start   Start                                                   << RUNG 12  STEP #0034 >>
Auto    infeed  ok line
run     DE11    1
S001-A                                                   K082
%I0006  %M0411  %M0300                                  %Q0051
-| |----| |----| |-------------------------------------( )-  (* Package coming to DE11          *)
         0009                                                   Cross reference for K082
                                                                         NONE
Man run
S001-M
%I0007
-| |

        Start   Start                                                   << RUNG 13  STEP #0039 >>
Auto    infeed  ok line
run     DE12    1
S001-A                                                   K083
%I0006  %M0412  %M0300                                  %Q0052
-| |----| |----| |-------------------------------------( )-  (* Package coming to DE12          *)
         0010                                                   Cross reference for K083
                                                                         NONE
Man run
S001-M
%I0007
-| |

[    END OF SUBROUTINE LOGIC     ]
```

```
[  START LD SUBROUTINE   ALARM   ]

[     VARIABLE DECLARATIONS      ]

[   START OF SUBROUTINE LOGIC    ]

 >>>>
```

```
(*****************************************************************************)
(*                                                                           *)
(* ALARM                                                                     *)
(*                                                                           *)
(*****************************************************************************)

        Check                                                          << RUNG 5  STEP #0003 >>
        relays
Em stop em stop
K097-98 K097_98
%I0001  %I0002                                              %M0085
 ─┤/├──────┤/├──┌─TMR─────────────────────────────────────────(S)──  (* Relay check em.stop *)
                 │ 0.10s                                              Cross reference for %M0085
                 │                                                    -] [- 7
          CONST ─│PV                                                  -(R)  6
          +00004 │
                 └─────────
                 %R0013

        Check                                                          << RUNG 6  STEP #0007 >>
        relays
Em stop em stop
K097-98 K097_98
%I0001  %I0002                                              %M0085
 ─┤/├──────┤ ├──────────────────────────────────────────────(R)──  (* Relay check em.stop *)
                                                                     Cross reference for %M0085
                                                                     -] [- 7
                                                                     -(S)  5

Em stop                                                                << RUNG 7  STEP #0010 >>
K097-98
%I0001                                                      %M0086
 ─┤/├──┬──────────────────────────────────────────────────────( )──  (* Tripp. em.stop *)
        │                                                             Cross reference for %M0086
Relay   │                                                             -] [- 8,10,11
check   │                                                             -]/[- 21
em.stop │
        │
%M0085  │
 ─┤ ├──┘
 0006

        Alarm                                                          << RUNG 8  STEP #0013 >>
Tripp.  emerg.
em.stop stop    Step 0
         H001
%M0086  %Q0004  %M0100                                      %M0049
 ─┤ ├──────┤/├──────┤ ├──────────────────────────────────────(S)──  (* Alarm em.stop *)
 0007    0010                                                        Cross reference for %M0049
                                                                     -] [- 10,11,20
                                                                     -]/[- 10,11,21
                                                                     -(R)  9

Alarm                                                                  << RUNG 9  STEP #0017 >>
reset

%T0004                                                      %M0049
 ─┤ ├──┬──────────────────────────────────────────────────────(R)──  (* Alarm em.stop *)
 0022   │                                                             Cross reference for %M0049
        │                                                             -] [- 10,11,20
Step 0  │                                                             -]/[- 10,11,21
        │                                                             -(S)  8
%M0100  │
 ─┤/├──┘

Alarm   Fast                                                           << RUNG 10  STEP #0020 >>
em.stop flash   Step 0
                                                             H001
%M0049  %M0003  %M0100                                      %Q0004
 ─┤ ├──────┤ ├──────┤ ├──┬──────────────────────────────────( )──  (* Alarm emerg. stop *)
 0009                    │                                           Cross reference for H001
                         │                                           -]/[- 8,12
Alarm   Tripp.           │
em.stop em.stop          │
        │                │
%M0049  %M0086           │
 ─┤/├──────┤ ├──┘        │
 0009    0007            │
                         │
Lamp                     │
test                     │
                         │
%M0006                   │
 ─┤ ├──────────────────┘
 0028
```

```
Alarm   Fast
em.stop flash   Step 0                                          << RUNG 11  STEP #0028 >>
                                                        H101_3
%M0049  %M0003  %M0100                                  %Q0011
 0009                                                   ( )     (* Alarm signal red *)
                                                                Cross reference for H101_3
Alarm   Tripp.                                                          NONE
em.stop em.stop
%M0049  %M0086
 0009    0007

Lamp
test
red

%M0503
 0031

Group           Alarm
trip            emerg.
overl.  Step 0  stop
                H001
%M0077  %M0100  %Q0004  TMR                             %M0087  << RUNG 12  STEP #0036 >>
 0024                   0.10s                           ( )     (* Tripp. overl. *)
                0010                                            Cross reference for %M0087
                        CONST  PV                               -] [- 13,15,21
                        +00020

                        %R0016

        Alarm
Tripp.  motor                                                   << RUNG 13  STEP #0041 >>
overl.  overl.  Step 0
         H002
%M0087  %Q0005  %M0100                                  %M0051
 0012    0015                                           (S)     (* Alarm overl. trip *)
                                                                Cross reference for %M0051
                                                                -] [- 15,20,21
                                                                -]/[- 15,21
                                                                -(R)  14

Alarm                                                           << RUNG 14  STEP #0045 >>
reset

%T0004                                                  %M0051
 0022                                                   (R)     (* Alarm overl. trip *)
                                                                Cross reference for %M0051
Step 0                                                          -] [- 15,20,21
                                                                -]/[- 15,21
%M0100                                                          -(S)  13
 0022

Alarm                                                           << RUNG 15  STEP #0048 >>
overl.  Fast
trip    flash   Step 0
                                                        H002
%M0051  %M0003  %M0100                                  %Q0005
 0014                                                   ( )     (* Alarm motor overl. *)
                                                                Cross reference for H002
Alarm                                                           -]/[- 13
overl.  Tripp.
trip    overl.
%M0051  %M0087
 0014    0012

Lamp
test

%M0006
 0028

Group                                                           << RUNG 16  STEP #0056 >>
safety
switch

%M0078                                                  %M0088
 0026                                                   ( )     (* Tripp. conv. switch *)
                                                                Cross reference for %M0088
                                                                -] [- 17,19,21
```

```
Tripp.  Alarm                                                    << RUNG 17  STEP #0058 >>
conv.   safe.
switch  switch  Step 0
         H003
%M0088  %Q0006  %M0100                                  %M0053
 0016    0019                                            (S)—   (* Alarm conv. switch *)
                                                                Cross reference for %M0053
                                                                -] [- 19,20,21
                                                                -]/[- 19,21
                                                                -(R)  18

Alarm                                                            << RUNG 18  STEP #0062 >>
reset

%T0004                                                  %M0053
 0022                                                    (R)—   (* Alarm conv. switch *)
                                                                Cross reference for %M0053
Step 0                                                          -] [- 19,20,21
                                                                -]/[- 19,21
%M0100                                                          -(S)  17
 0022

Alarm                                                            << RUNG 19  STEP #0065 >>
conv.   Fast
switch  flash   Step 0
                                                         H003
%M0053  %M0003  %M0100                                  %Q0006
 0018                                                    ( )—   (* Alarm safe. switch *)
                                                                Cross reference for H003
Alarm   Tripp.                                                  -]/[- 17
conv.   conv.
switch  switch

%M0053  %M0088
 0018    0016

Lamp
test

%M0006
 0028

Alarm   Fast                                                     << RUNG 20  STEP #0073 >>
em.stop flash   Step 0
                                                         H22S
%M0049  %M0003  %M0100                                  %Q0003
 0009                                                    ( )—   (* Reset alarm/lamp test *)
                                                                Cross reference for H22S
Alarm                                                                   NONE
overl.
trip

%M0051
 0014

Alarm
conv.
switch

%M0053
 0018

Lamp
test

%M0006
 0028
```

```
Alarm                                                          << RUNG 21  STEP #0080 >>
overl.  Fast          Alarm   Tripp.
trip    flash   Step 0 em.stop em.stop
                                                        H101_2
%M0051  %M0003  %M0100  %M0049  %M0086                  %Q0010
 0014                    0009    0007                   ( )--  (* Warning signal yellow          *)
                                                                Cross reference for H101_2
                                                                        NONE
Alarm
conv.
switch

%M0053
 0018

        Alarm
Tripp.  overl.
overl.  trip

%M0087  %M0051
 0012    0014

Tripp.  Alarm
conv.   conv.
switch  switch

%M0088  %M0053
 0016    0018

Lamp
test
yellow

%M0502
 0030

Reset                                                          << RUNG 22  STEP #0094 >>
alarm/
lampt.
 S22H
%I0005                                                  %T0004
                                                        (^)--  (* Alarm reset *)
                                                                Cross reference for %T0004
                                                                -] [- 9,14,18
```

```
(*************************************************************************)
(*                                                                       *)
(* GROUP OVERLOAD TRIP                                                   *)
(*                                                                       *)
(*************************************************************************)

Overl.                                                          << RUNG 24  STEP #0097 >>
Trip on Layout
M101    1
 Q001
%I0017  %M0111                                          %M0077
 ─┤ ├──────┤/├──────────────────────────────────────────( )──  (* Group trip overl.                *)
                                                                Cross reference for %M0077
Overl.                                                          -] [- 12
Trip on
M102
 Q002
%I0018
 ─┤ ├──────────
Overl.
Trip on
M103
 Q003
%I0019
 ─┤ ├──────────
Overl.
Trip on
M104
 Q004
%I0020
 ─┤ ├──────────
Overl.
Trip on
M105
 Q005
%I0021
 ─┤ ├──────────
Overl.
Trip on
M106
 Q006
%I0022
 ─┤ ├──────────
Overl.
Trip on Layout
M111    4
 Q011
%I0023  %M0114
 ─┤ ├──────┤ ├──
Overl.
Trip on
M112
 Q012
%I0024
 ─┤ ├──────────
```

```
(*****************************************************************************)
(*                                                                           *)
(* GROUP SAFETY SWITCH                                                       *)
(*                                                                           *)
(*****************************************************************************)

Safety  Safety  Safety  Safety  Safety  Safety  Safety  Safety                  << RUNG 26  STEP #0110 >>
switch  switch  switch  switch  switch  switch  switch  switch
on M101 on M102 on M103 on M104 on M105 on M106 on M111 on M112
 Q101    Q102    Q103    Q104    Q105    Q106    Q111    Q112
%I0009  %I0010  %I0011  %I0012  %I0013  %I0014  %I0015  %I0016          %M0078
-| |----| |-----| |-----| |-----| |-----| |-----| |-----| |-----------------( )-   (* Group safety switch              *)
|                                                                                 Cross reference for %M0078
|Layout                                   Layout                                  -]/[- 16
|1                                        4
|
|%M0111                                   %M0114
|-| |-                                    -|/|-
```

```
(*************************************************************************)
(*                                                                       *)
(* LAMP TEST                                                             *)
(*                                                                       *)
(*************************************************************************)

Reset                                                          << RUNG 28  STEP #0123 >>
alarm/
lampt.
 S22H
%I0005                                                %M0006
 ─┤ ├─ TMR ──────────────────────────────────────────( )──  (* Lamp test *)
        0.10s                                                 Cross reference for %M0006
                                                              -] [- 10,15,19,20,29
 CONST ─PV
 +00020

        %R0019

        Lamp    Lamp                                           << RUNG 29  STEP #0126 >>
Lamp    test    test
test    yellow  red

%M0006  %M0502  %M0503                                %M0501
 ─┤ ├─ ─┤/├─── ─┤/├──────────────────────────────────( )──  (* Lamp test green                  *)
 0028    0030    0031                                         Cross reference for %M0501
                                                              -] [- 29,30
Lamp
test
green

%M0501
 ─┤ ├─
 0029

Lamp    Lamp                                                   << RUNG 30  STEP #0131 >>
test    test
green   red

%M0501  %M0503                                        %M0502
 ─┤ ├─ ─┤/├─── TMR ──────────────────────────────────( )──  (* Lamp test yellow                 *)
 0029    0031    0.10s                                        Cross reference for %M0502
                                                              -] [- 21,30,31
Lamp                                                          -]/[- 29
test
yellow

%M0502
 ─┤ ├─  CONST ─PV
 0030    +00005

                %R0022

Lamp                                                           << RUNG 31  STEP #0136 >>
test
yellow

%M0502                                                %M0503
 ─┤ ├─ TMR ──────── OFDT ──────────────────────────────( )──  (* Lamp test red                    *)
 0030    0.10s        0.10s                                    Cross reference for %M0503
                                                              -] [- 11
 CONST ─PV     CONST ─PV                                      -]/[- 29,30
 +00005        +00005

        %R0025        %R0028

[    END OF SUBROUTINE LOGIC     ]
```

```
[  START LD SUBROUTINE   CHAIN   ]

[     VARIABLE DECLARATIONS      ]

[   START OF SUBROUTINE LOGIC    ]

 >>>>
```

```
(*************************************************************************)
(*                                                                       *)
(* CHAIN LUBRICATION                                                     *)
(*                                                                       *)
(*************************************************************************)

M101                                                        << RUNG 5  STEP #0003 >>
running
                                                      Y951
%M0316                                                %Q0057
 ─┤ ├──────────┬──────────┬──────────────────────────────( )──  (* Chain lubric. conv.          *)
            OFDT                                              Cross reference for Y951
            0.10s                                             -] [- 7
M102
running
%M0326
 ─┤ ├──────────┤ CONST ─┤PV
            +00005
M103                Count
running             reg.
                    M106
%M0336
 ─┤ ├──────────┤       %R0660
M104
running
%M0346
 ─┤ ├──────────┤
M105
running
%M0356
 ─┤ ├──────────┤
M106
running
%M0366
 ─┤ ├──────────┘

M111                                                        << RUNG 6  STEP #0011 >>
running
                                                      Y952
%M0376                                                %Q0058
 ─┤ ├──────────┬──────────────────────────────────────────( )──  (* Chain lubric. conv. by-pass  *)
            OFDT                                              Cross reference for Y952
            0.10s                                             -] [- 7
 CONST ─┤PV
 +00005

        %R0663

Chain                                                       << RUNG 7  STEP #0014 >>
lubric.
conv.
 Y951
%Q0057                                                K084
 ─┤ ├──────────┬──────────┬──────────────────────────────( )──  (* Start timer 1 chain lubric.  *)
 0005       TMR                                               Cross reference for K084
            0.10s                                                    NONE
Chain
lubric.
conv.
by-pass
 Y952
%Q0058
 ─┤ ├──────────┤ CONST ─┤PV
 0006       +00002

                %R0666

[    END OF SUBROUTINE LOGIC     ]
```

```
[  START LD SUBROUTINE   BRAKE   ]

[     VARIABLE DECLARATIONS      ]

[   START OF SUBROUTINE LOGIC    ]

 >>>>
```

```
(*****************************************************************************)
(*                                                                           *)
(* BRAKE 1                                                                   *)
(*                                                                           *)
(*****************************************************************************)

Queue                                                                << RUNG 5  STEP #0003 >>
photo.
brake 1
 B121
%I0049                                                   %M0210
 -| |-  OFDT  ------  TMR  ------------------------------( )-  (* Cond. Y101 *)
        0.01s        0.10s                                     Cross reference for %M0210
                                                               -] [- 7
 CONST -PV    CONST -PV
 +00005       +00010

        %R0209       %R0212

Count.                                                               << RUNG 6  STEP #0007 >>
photo.
brake 1
 B122
%I0050                                                   %M0211
 -| |-  TMR  ------  OFDT  ------------------------------( )-  (* Pulsing time Y101 *)
        0.10s        0.10s                                     Cross reference for %M0211
                                                               -] [- 7
 CONST -PV    CONST -PV
 +00020       +00015

        %R0215       %R0218

Cond.                                                                << RUNG 7  STEP #0011 >>
Y101
                                                         Y101
%M0210                                                   %Q0046
 -| |-------------------------------------------------------( )-  (* Brake 1 *)
 0005                                                            Cross reference for Y101
                                                                          NONE
Pulsing
time
Y101

%M0211
 -| |-
 0006
```

```
(*************************************************************************)
(*                                                                       *)
(* BRAKE 2                                                               *)
(*                                                                       *)
(*************************************************************************)

Queue                                                          << RUNG 9  STEP #0015 >>
photo.
brake 2
 B123
%I0051                                                   %M0220
 ─┤ ├─ OFDT  ──── TMR  ──────────────────────────────( )─  (* Cond. Y102 *)
        0.01s      0.10s                                    Cross reference for %M0220
                                                            -] [- 11
 CONST ─PV    CONST ─PV
 +00005       +00010

        %R0221       %R0224

Count.                                                         << RUNG 10  STEP #0019 >>
photo.
brake 2
 B124
%I0052                                                   %M0221
 ─┤ ├─ TMR  ──── OFDT  ──────────────────────────────( )─  (* Pulsing time Y102 *)
        0.10s      0.10s                                    Cross reference for %M0221
                                                            -] [- 11
 CONST ─PV    CONST ─PV
 +00020       +00015

        %R0227       %R0230

Cond.                                                          << RUNG 11  STEP #0023 >>
Y102
                                                         Y102
%M0220                                                   %Q0047
 ─┤ ├──────────────────────────────────────────────────( )─  (* Brake 2 *)
  0009                                                      Cross reference for Y102
                                                                     NONE
Pulsing
time
Y102

%M0221
 ─┤ ├─
  0010

[    END OF SUBROUTINE LOGIC     ]
```

```
[  START LD SUBROUTINE   PLMS    ]

[     VARIABLE DECLARATIONS      ]

[   START OF SUBROUTINE LOGIC    ]

 (*****************************************************************************)
 (*                                                                           *)
 (* SIGNALS FOR PLMS                                                          *)
 (*                                                                           *)
 (*****************************************************************************)

 (*****************************************************************************)
 (* Easy Ride full. Event code 8071                                           *)
 (*****************************************************************************)

 (*****************************************************************************)
 (* Check DE external enable signal from filling machine. Event code 8050    *)
 (*****************************************************************************)

Queue                                                                << RUNG 6  STEP #0004 >>
photo.
M106
 B112
%I0044                                                   %G0033
 -|/|-  TMR                                              -(M)-  (* Break enable signal              *)
        0.10s                                                    Cross reference for %G0033
                                                                 -]/[- 7
 CONST -PV
 +09000

        Break
        enable
        signal

        %R0963

Break                                                                << RUNG 7  STEP #0007 >>
enable
signal

%G0033                                                   %G0003
 -|/|-  BIT                                              -(M)-  (* DE Ext. signal enable           *)
 0006   TEST-                                                    Cross reference for %G0003
         WORD                                                    -] [- 16,34,38,40,42,45,47,49,51,52,55,56,60,62,
                                                                      63,64,66,68,70,72,76,77,81,82,84
Miscel-                                                          -]/[- 11,72,78,83
laneous
signals

%R0924 -IN  Q
        LEN
        00001

 CONST -BIT
  00001

 (*****************************************************************************)
 (* Reset of register                                                         *)
 (*****************************************************************************)

                      Alarm          Alarm   Tripp.  DE                    << RUNG 9  STEP #0011 >>
        Alarm  Tripp. overl.  Tripp. conv.   conv.   Prod.
Step 1  em.stop em.stop trip  overl. switch  switch  time

%M0101  %M0049 %M0086 %M0051 %M0087 %M0053 %M0088 %G0004
-| |-   -|/|-  -|/|-  -|/|-  -|/|-  -|/|-  -|/|-  -|/|-      <+>
                                                     0072

        Jam                                                          << RUNG 10  STEP #0020 >>
        inside
        easy   Stop   DE not
        ride   M105   ready

        %G0015 %M0355 %G0013                             %G0005
<+>     -|/|-  -|/|-  -|/|-                              -(M)-  (* Ready for prod                 *)
         0044          0062                                      Cross reference for %G0005
                                                                 -] [- 11
```

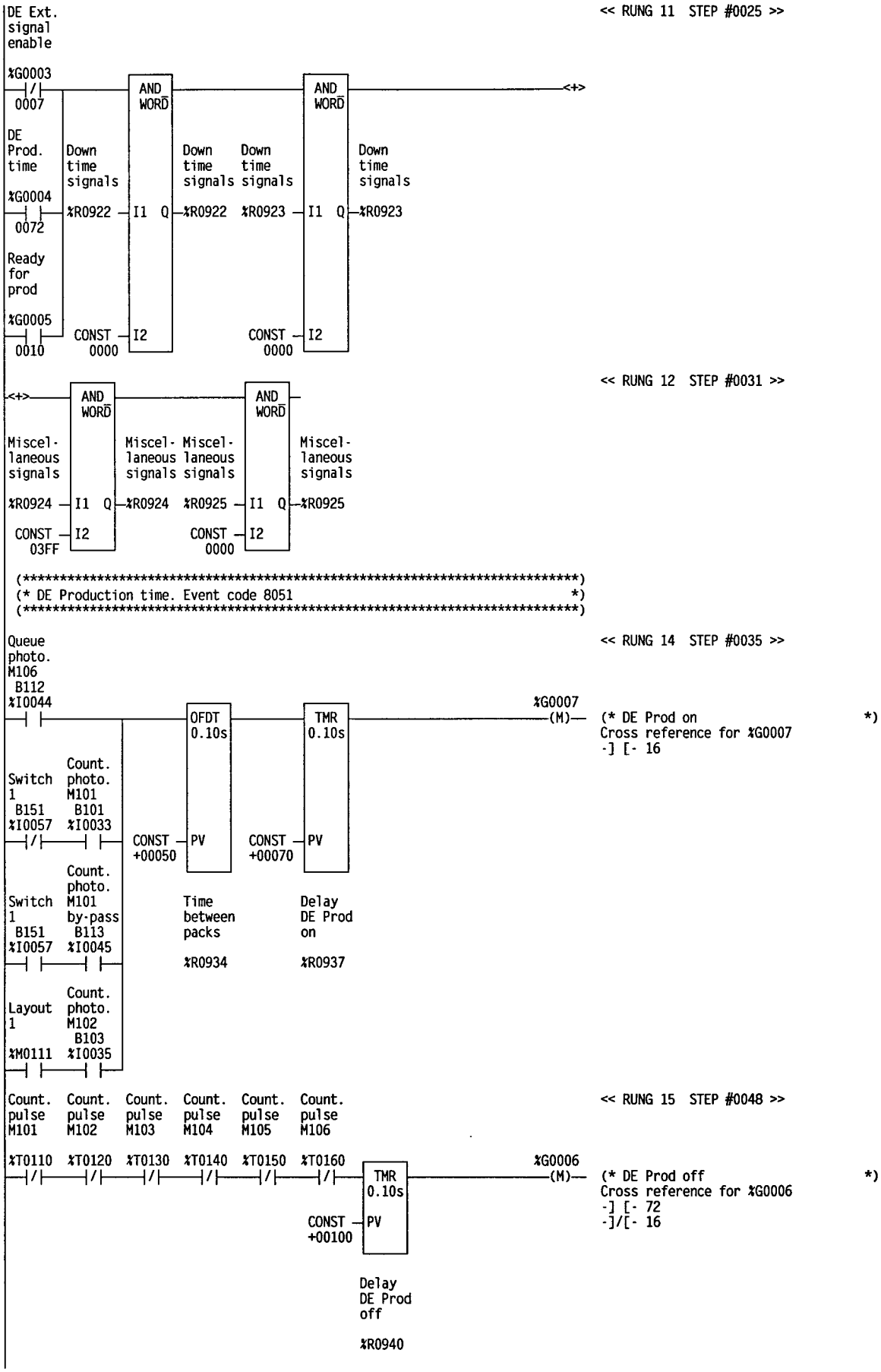
DE Ext. signal enable
%G0003
0007
DE Prod. time
%G0004
0072
Ready for prod
%G0005
0010
Down time signals
%R0922
CONST 0000
AND WORD
I1 Q
I2
%R0922
Down time signals
%R0923
CONST 0000
AND WORD
I1 Q
I2
%R0923
<+>
<< RUNG 11 STEP #0025 >>
<+>
Miscel-laneous signals
%R0924
CONST 03FF
AND WORD
I1 Q
I2
%R0924
Miscel-laneous signals
%R0925
CONST 0000
AND WORD
I1 Q
I2
%R0925
<< RUNG 12 STEP #0031 >>
(***)
(* DE Production time. Event code 8051 *)
(***)
Queue photo. M106 B112 %I0044
Switch 1 B151 %I0057
Count. photo. M101 B101 %I0033
CONST +00050
OFDT 0.10s
PV
Time between packs
%R0934
CONST +00070
TMR 0.10s
PV
Delay DE Prod on
%R0937
%G0007
(M)
(* DE Prod on *)
Cross reference for %G0007
-] [- 16
<< RUNG 14 STEP #0035 >>
Switch 1 B151 %I0057
Count. photo. M101 by-pass B113 %I0045
Layout 1 %M0111
Count. photo. M102 B103 %I0035
Count. pulse M101
Count. pulse M102
Count. pulse M103
Count. pulse M104
Count. pulse M105
Count. pulse M106
%T0110
%T0120
%T0130
%T0140
%T0150
%T0160
CONST +00100
TMR 0.10s
PV
Delay DE Prod off
%R0940
%G0006
(M)
(* DE Prod off *)
Cross reference for %G0006
-] [- 72
-]/[- 16
<< RUNG 15 STEP #0048 >>

```
                                                                                << RUNG 16  STEP #0056 >>
                          DE Ext.
DE Prod DE Prod Main      signal  Stop
on      off     contac.   enable  M105
                 K001
%G0007  %G0006  %Q0041    %G0003  %M0355                              %G0004
 0014    0015                0007                                     (SM)-  (* DE Prod. time                    *)
                                                                             Cross reference for %G0004
                                                                             -] [- 11,38,40,42,45,47,49,51,59,60,62,68,70
                                                                             -]/[- 9,55,56,58,63,66
                                                                             -(RM) 72
                                  Miscel-
                                  laneous
                                  signals
                                  %R0924 -IN
                                           LEN
                                          00001
                                   CONST -BIT
                                    00002

 (*****************************************************************************)
 (* Manual running Event code 8052                                            *)
 (*****************************************************************************)

Man run                                                                         << RUNG 18  STEP #0064 >>
S001-M
%I0007
 0014
                                  Miscel-
                                  laneous
                                  signals
                                  %R0924 -IN
                                           LEN
                                          00001
                                   CONST -BIT
                                    00003

Man run                                                                         << RUNG 19  STEP #0066 >>
S001-M
%I0007
 0014
                                  Miscel-
                                  laneous
                                  signals
                                  %R0924 -IN
                                           LEN
                                          00001
                                   CONST -BIT
                                    00003

 (*****************************************************************************)
 (* Conveyor lubrication fault. Event code 8053                               *)
 (*****************************************************************************)

                ALW OFF                                                         << RUNG 21  STEP #0069 >>
%I0032          %S0008
 0014
                                  Miscel-
                                  laneous
                                  signals
                                  %R0924 -IN
                                           LEN
                                          00001
                                   CONST -BIT
                                    00004
```

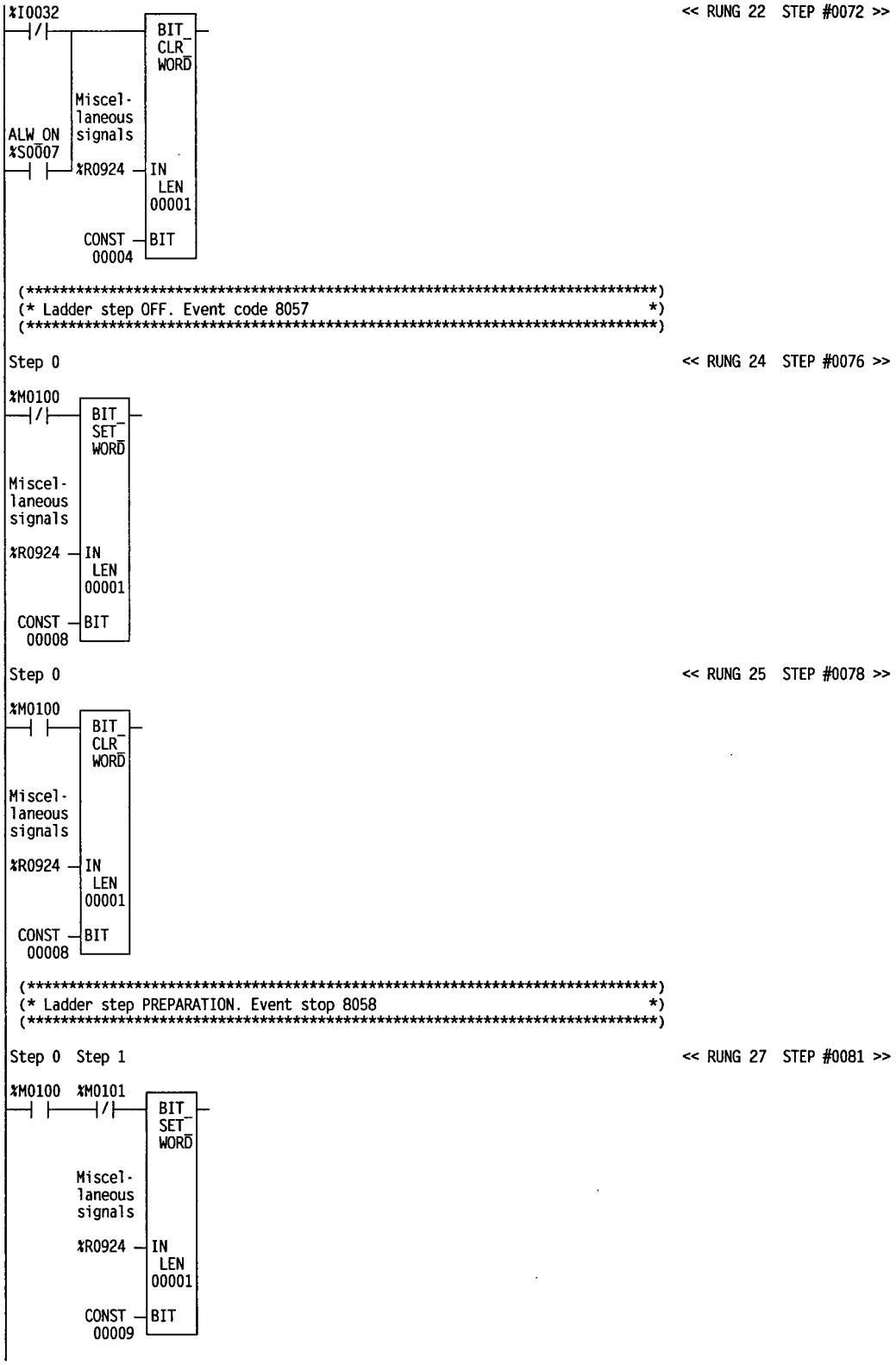
%I0032
<< RUNG 22 STEP #0072 >>
BIT_CLR_WORD
Miscel-laneous signals
ALW_ON
%S0007
%R0924
IN
LEN
00001
CONST
00004
BIT
(*****)
(* Ladder step OFF. Event code 8057 *)
(*****)
Step 0
<< RUNG 24 STEP #0076 >>
%M0100
BIT_SET_WORD
Miscel-laneous signals
%R0924
IN
LEN
00001
CONST
00008
BIT
Step 0
<< RUNG 25 STEP #0078 >>
%M0100
BIT_CLR_WORD
Miscel-laneous signals
%R0924
IN
LEN
00001
CONST
00008
BIT
(*****)
(* Ladder step PREPARATION. Event stop 8058 *)
(*****)
Step 0 Step 1
<< RUNG 27 STEP #0081 >>
%M0100 %M0101
BIT_SET_WORD
Miscel-laneous signals
%R0924
IN
LEN
00001
CONST
00009
BIT

Step 0 << RUNG 28 STEP #0084 >>

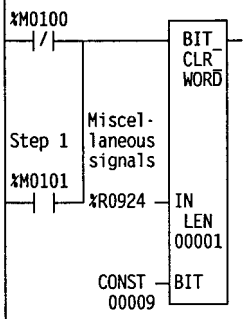


```
(*****************************************************************************)
(* Ladder step PRODUCTION. Event code 8059                                   *)
(*****************************************************************************)
```

Step 1 << RUNG 30 STEP #0088 >>

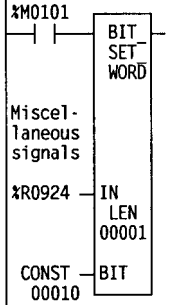

Step 1 << RUNG 31 STEP #0090 >>

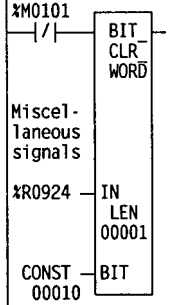


```
(*****************************************************************************)
(*                                                                           *)
(* DOWNTIME SIGNALS                                                          *)
(*                                                                           *)
(*****************************************************************************)

(*****************************************************************************)
(* Indication of PLMS alarm                                                  *)
(*****************************************************************************)
```

DE Ext. signal enable

<< RUNG 34 STEP #0094 >>

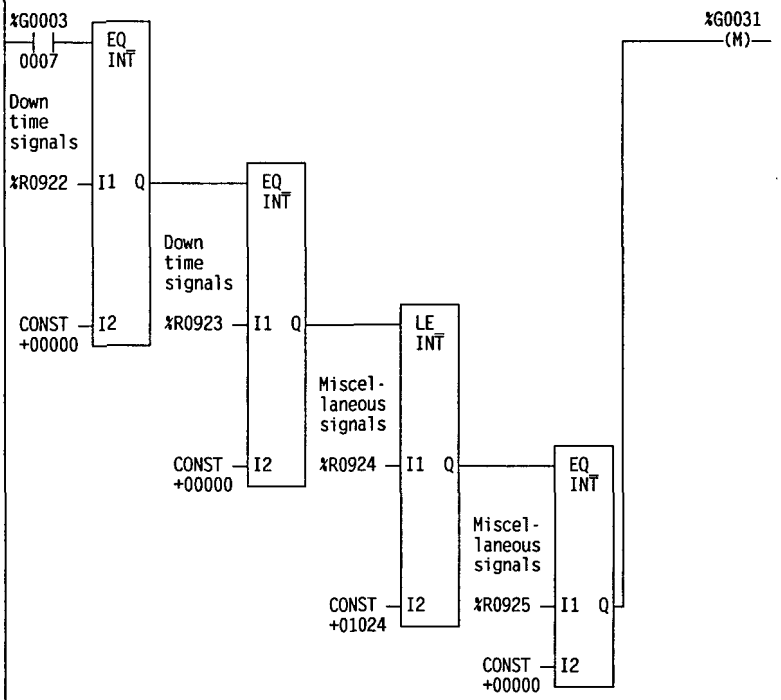

(* No PLMS alarm *)
Cross reference for %G0031
-]/[- 35

No PLMS alarm

<< RUNG 35 STEP #0100 >>

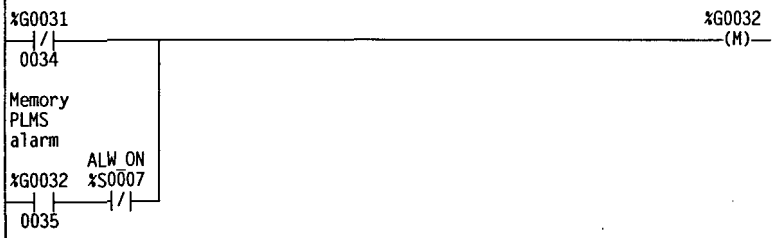

(* Memory PLMS alarm *)
Cross reference for %G0032
-] [- 35
-]/[- 36

Memory PLMS alarm

<< RUNG 36 STEP #0105 >>

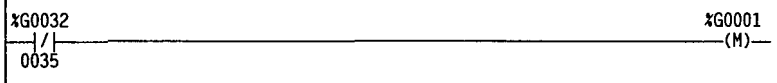

(* TPOP alarm *)
Cross reference for %G0001
-] [- 38,40,42,45,47,49,51,55,56,60,63,66,68,70

```
(*************************************************************************)
(* Emergency stop. Event code 8010                                       *)
(*************************************************************************)
```

DE Prod. time | Alarm em.stop | TPOP alarm | DE Ext. signal enable

<< RUNG 38 STEP #0108 >>

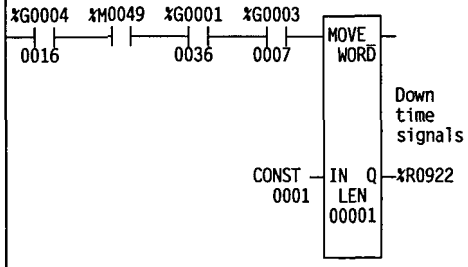


```
(*************************************************************************)
(* Motor protection. Event code 8013                                     *)
(*************************************************************************)
```

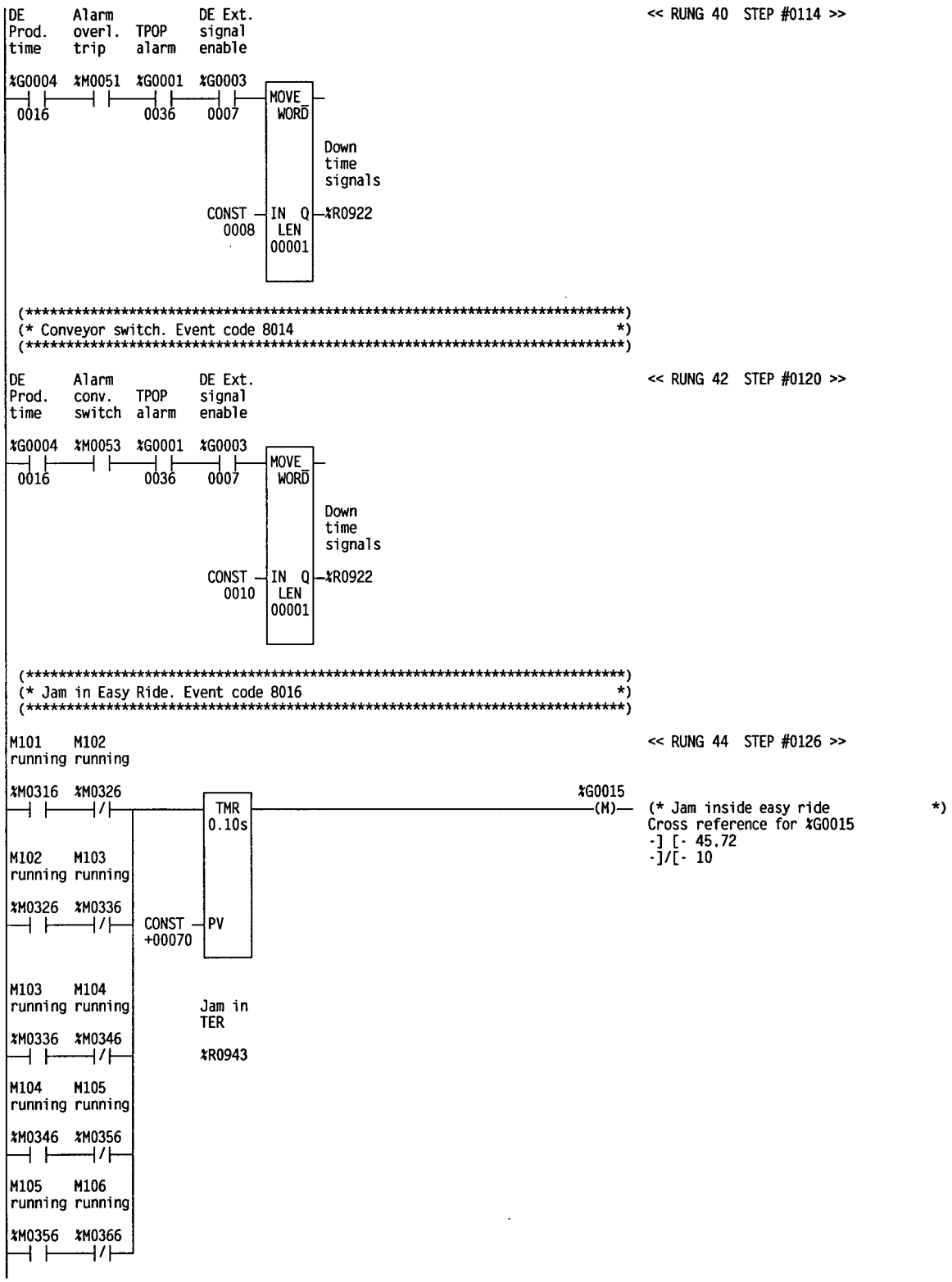
DE Prod. time
Alarm overl. trip
TPOP alarm
DE Ext. signal enable
<< RUNG 40 STEP #0114 >>
%G0004 0016
%M0051
%G0001 0036
%G0003 0007
MOVE WORD
Down time signals
CONST 0008
IN Q
LEN 00001
%R0922
(* Conveyor switch. Event code 8014 *)
DE Prod. time
Alarm conv. switch
TPOP alarm
DE Ext. signal enable
<< RUNG 42 STEP #0120 >>
%G0004 0016
%M0053
%G0001 0036
%G0003 0007
MOVE WORD
Down time signals
CONST 0010
IN Q
LEN 00001
%R0922
(* Jam in Easy Ride. Event code 8016 *)
M101 running
M102 running
<< RUNG 44 STEP #0126 >>
%M0316
%M0326
TMR 0.10s
%G0015
(M)
(* Jam inside easy ride *)
Cross reference for %G0015
-] [- 45,72
-]/[- 10
M102 running
M103 running
%M0326
%M0336
CONST +00070
PV
M103 running
M104 running
Jam in TER
%M0336
%M0346
%R0943
M104 running
M105 running
%M0346
%M0356
M105 running
M106 running
%M0356
%M0366

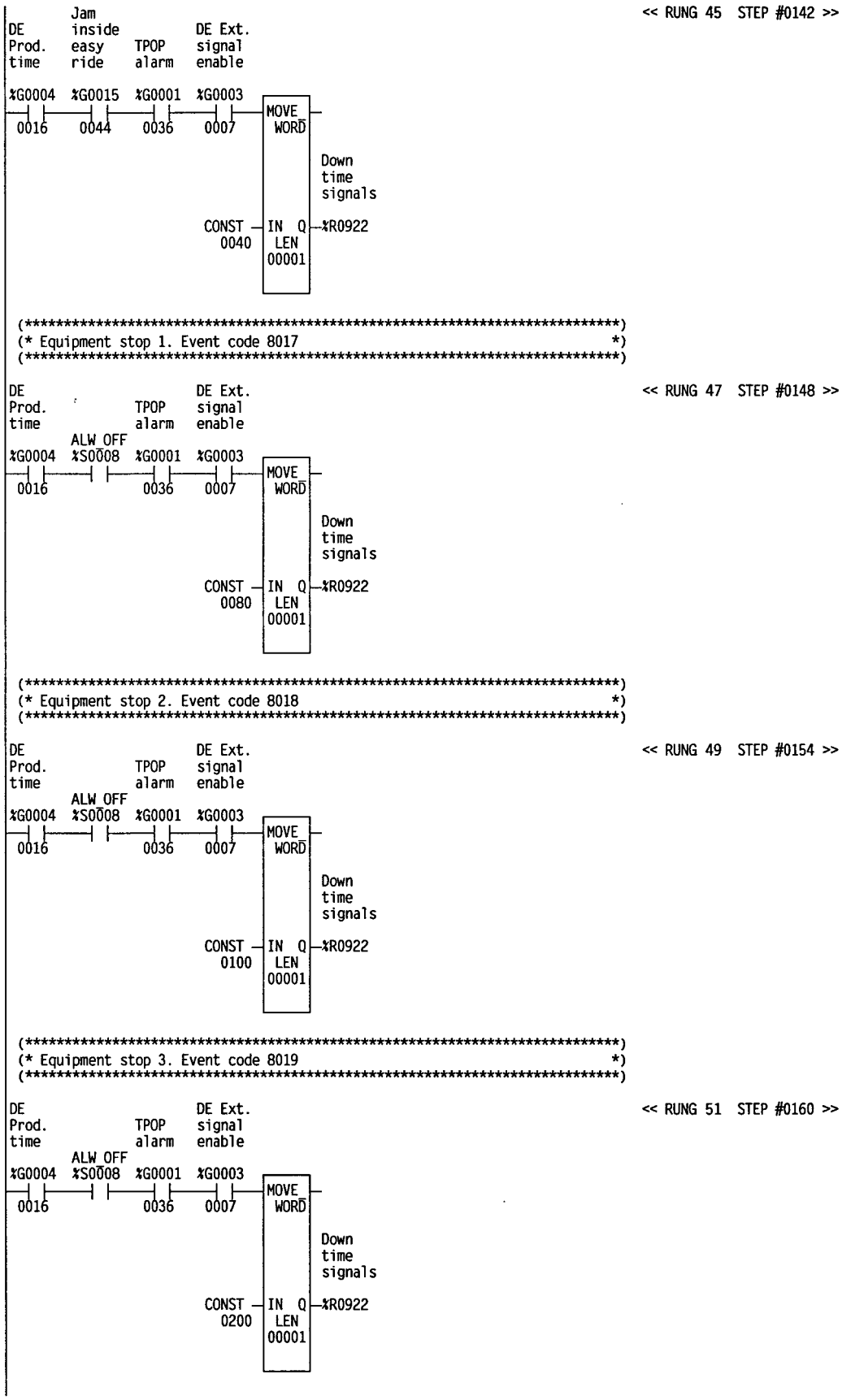
<< RUNG 45 STEP #0142 >>
DE Prod. time
Jam inside easy ride
TPOP alarm
DE Ext. signal enable
%G0004 0016
%G0015 0044
%G0001 0036
%G0003 0007
MOVE WORD
Down time signals
CONST 0040
IN Q
LEN 00001
%R0922
(* Equipment stop 1. Event code 8017 *)
<< RUNG 47 STEP #0148 >>
DE Prod. time
TPOP alarm
DE Ext. signal enable
ALW OFF
%G0004 0016
%S0008
%G0001 0036
%G0003 0007
MOVE WORD
Down time signals
CONST 0080
IN Q
LEN 00001
%R0922
(* Equipment stop 2. Event code 8018 *)
<< RUNG 49 STEP #0154 >>
DE Prod. time
TPOP alarm
DE Ext. signal enable
ALW OFF
%G0004 0016
%S0008
%G0001 0036
%G0003 0007
MOVE WORD
Down time signals
CONST 0100
IN Q
LEN 00001
%R0922
(* Equipment stop 3. Event code 8019 *)
<< RUNG 51 STEP #0160 >>
DE Prod. time
TPOP alarm
DE Ext. signal enable
ALW OFF
%G0004 0016
%S0008
%G0001 0036
%G0003 0007
MOVE WORD
Down time signals
CONST 0200
IN Q
LEN 00001
%R0922

```
DE Ext.
signal
enable                                                          << RUNG 52  STEP #0165 >>

%G0003                                                  %G0022
 0007    EQ_                                              (M)-   (* No events in R922                 *)
         INT                                                     Cross reference for %G0022
                                                                 -] [- 55,56,60,63,66,68,70
Down
time
signals

%R0922 -I1  Q

 CONST -I2
 +00000

 >>>>
```

```
>>>
```

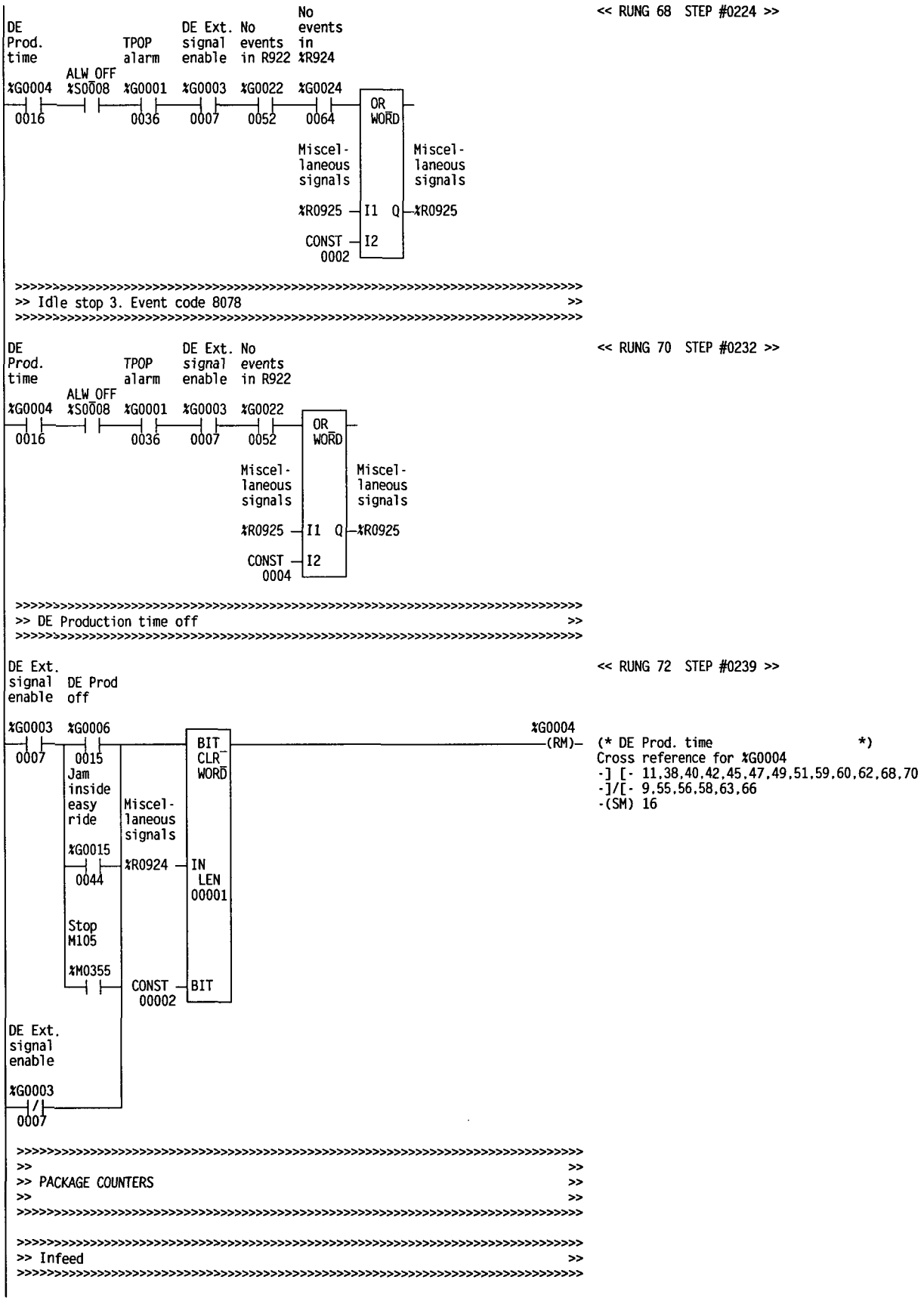

<< RUNG 68 STEP #0224 >>

<< RUNG 70 STEP #0232 >>

<< RUNG 72 STEP #0239 >>

(* DE Prod. time *)
Cross reference for %G0004
-] [- 11,38,40,42,45,47,49,51,59,60,62,68,70
-]/[- 9,55,56,58,63,66
-(SM) 16

```
Count.                                                          << RUNG 75  STEP #0249 >>
photo.
M106
 B111                                                   B104--
%I0043                                                  %T0254
 ─┤ ├─ TMR ──────────────────────────────────────────────(v)─  (* Pulse package counter          *)
        0.01s                                                   Cross reference for B104--
                                                                -] [- 76
 CONST ─PV
 +00005

        Package
        count
        infeed

        %R0946

        DE Ext. Pulse                                           << RUNG 76  STEP #0252 >>
        signal  package
Step 1  enable  counter
                B104--
%M0101  %G0003  %T0254
 ─┤ ├─ ─┤ ├─── ─┤ ├─ ADD
          0007    0075  DINT
                 Reserv.        Reserv.
                 for            for
                 package        package
                 in             in
                %R0926 ─I1  Q─ %R0926
                 CONST ─I2
            +0000000001

DE Ext.                                                         << RUNG 77  STEP #0256 >>
signal
enable

%G0003
 ─┤ ├─ MOVE
  0007   WORD

Reserv.
for
package
in                  Package
                    in
%R0926 ─IN  Q─ %R0920
         LEN
        00001

DE Ext.                                                         << RUNG 78  STEP #0258 >>
signal
enable

%G0003
 ─┤/├─ MOVE
  0007   WORD

                    Reserv.
                    for
Package             package
in                  in
%R0920 ─IN  Q─ %R0926
         LEN
        00001

>>>
```

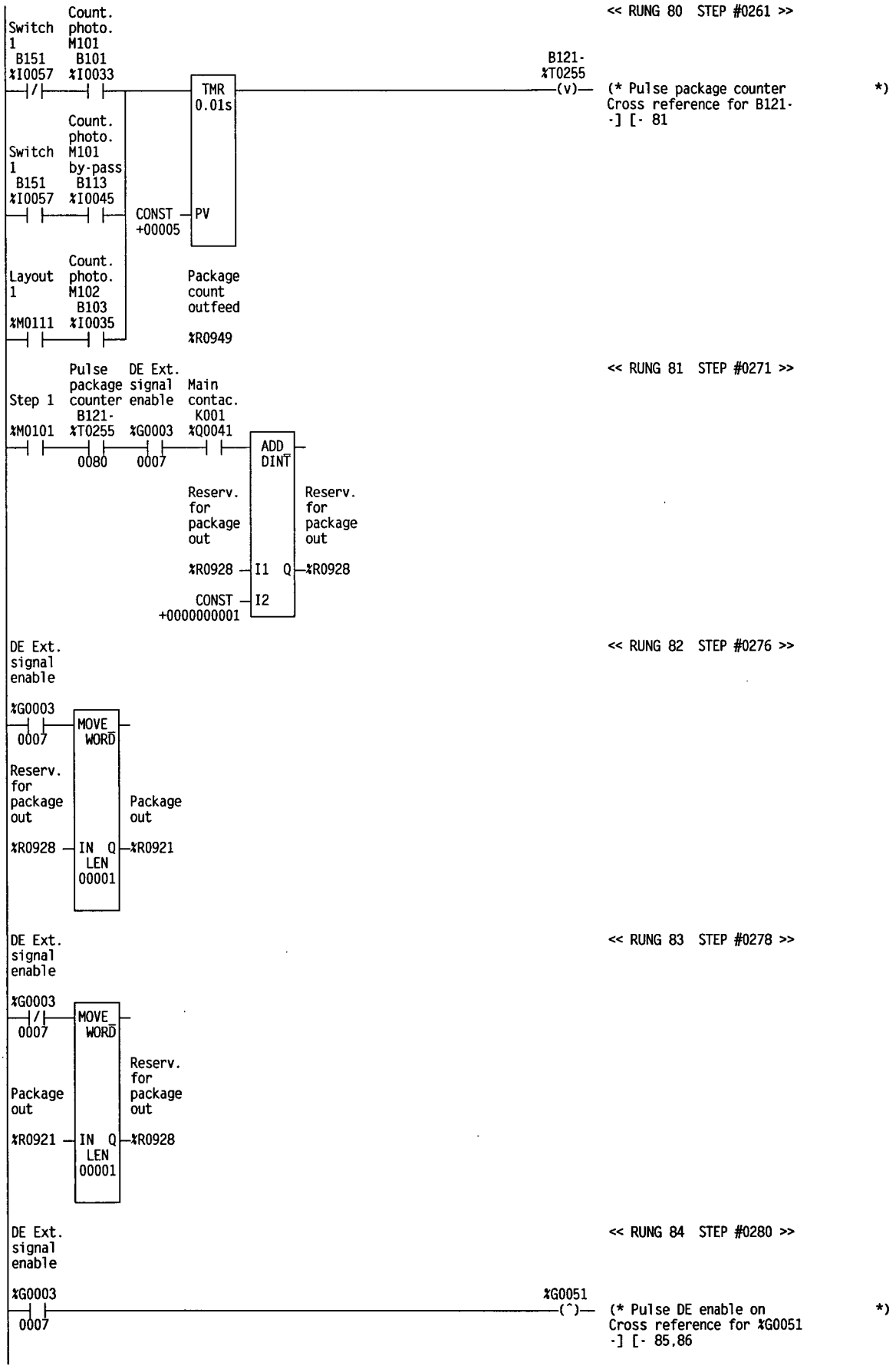
<< RUNG 80 STEP #0261 >>
Switch 1 B151 %I0057
Count. photo. M101 B101 %I0033
TMR 0.01s
B121- %T0255
(v)
(* Pulse package counter Cross reference for B121- -] [- 81 *)
Switch 1 B151 %I0057
Count. photo. M101 by-pass B113 %I0045
CONST +00005
PV
Layout 1 %M0111
Count. photo. M102 B103 %I0035
Package count outfeed
%R0949
<< RUNG 81 STEP #0271 >>
Step 1 %M0101
Pulse package counter B121- %T0255
0080
DE Ext. signal enable %G0003
0007
Main contac. K001 %Q0041
ADD DINT
Reserv. for package out
%R0928
I1 Q
I2
CONST +0000000001
<< RUNG 82 STEP #0276 >>
DE Ext. signal enable %G0003
0007
MOVE WORD
Reserv. for package out %R0928
IN Q
LEN 00001
Package out %R0921
<< RUNG 83 STEP #0278 >>
DE Ext. signal enable %G0003
0007
MOVE WORD
Package out %R0921
Reserv. for package out %R0928
<< RUNG 84 STEP #0280 >>
DE Ext. signal enable %G0003
0007
%G0051
(^)
(* Pulse DE enable on Cross reference for %G0051 -] [- 85,86 *)

Pulse
DE
enable
on

<< RUNG 85 STEP #0282 >>

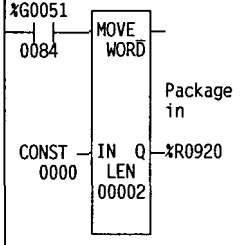

Pulse
DE
enable
on

<< RUNG 86 STEP #0284 >>

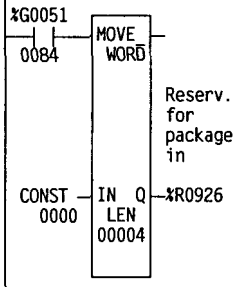

[END OF SUBROUTINE LOGIC]

```
================================================================================
========== GLOBAL  (%G)  GLOBAL CROSS REFERENCES
================================================================================
REF.     BLOCK    NICKNAME   REF. DESCRIPTION / CROSS REFERENCES
-------- -------- --------- -----------------------------------
%G0001   PLMS               TPOP alarm
                            -] [- 38,40,42,45,47,49,51,55,56,60,63,66,68,70
                            -(M)  36
%G0002   PLMS               Manuel step down
                            -] [- 58,60
                            -(SM) 59
                            -(RM) 58
%G0003   PLMS               DE Ext. signal enable
                            -] [- 16,34,38,40,42,45,47,49,51,52,55,56,60,62,63,64,66,68,70,72,76,77,81,82,84
                            -]/[- 11,72,78,83
                            -(M)  7
%G0004   PLMS               DE Prod. time
                            -] [- 11,38,40,42,45,47,49,51,59,60,62,68,70
                            -]/[- 9,55,56,58,63,66
                            -(SM) 16
                            -(RM) 72
%G0005   PLMS               Ready for prod
                            -] [- 11
                            -(M)  10
%G0006   PLMS               DE Prod off
                            -] [- 72
                            -]/[- 16
                            -(M)  15
%G0007   PLMS               DE Prod on
                            -] [- 16
                            -(M)  14
%G0013   PLMS               DE not ready
                            -] [- 62
                            -]/[- 10
                            -(M)  62
%G0014   PLMS               -] [- 56
                            -(M)  55
%G0015   PLMS               Jam inside easy ride
                            -] [- 45,72
                            -]/[- 10
                            -(M)  44
%G0022   PLMS               No events in R922
                            -] [- 55,56,60,63,66,68,70
                            -(M)  52
%G0024   PLMS               No events in %R924
                            -] [- 66,68
                            -(M)  64
%G0031   PLMS               No PLMS alarm
                            -]/[- 35
                            -(M)  34
%G0032   PLMS               Memory PLMS alarm
                            -] [- 35
                            -]/[- 36
                            -(M)  35
%G0033   PLMS               Break enable signal
                            -]/[- 7
                            -(M)  6
%G0051   PLMS               Pulse DE enable on
                            -] [- 85,86
                            -(^)  84

================================================================================
========== INPUT  (%I)  GLOBAL CROSS REFERENCES
================================================================================
REF.     BLOCK    NICKNAME   REF. DESCRIPTION / CROSS REFERENCES
-------- -------- --------- -----------------------------------
%I0001   ALARM    K097-98    Em stop
                            -]/[- 5,6,7
%I0002   ALARM    K097_98    Check relays em stop
                            -] [- 6
                            -]/[- 5
%I0003   COMMON   S20H       Step up
                            -] [- 9
%I0004   COMMON   S21H       Step down
                            -] [- 11
                            -]/[- 14
%I0005   ALARM    S22H       Reset alarm/lampt.
                            -] [- 22,28
%I0006   LINE     S001-A     Auto run
                            -] [- 13,201,206
                            -]/[- 45,76,106,135,165,194
         GREEN              -] [- 5
         EXT                -] [- 6,12,13
%I0007   LINE     S001-M     Man run
                            -] [- 44,75,105,134,164,193,201,206
                            -]/[- 45,76,106,135,165,194
         EXT                -] [- 6,12,13
         PLMS               -] [- 18
                            -]/[- 19
%I0009   ALARM    Q101       Safety switch on M101
                            -] [- 26
%I0010   ALARM    Q102       Safety switch on M102
                            -] [- 26
%I0011   ALARM    Q103       Safety switch on M103
```

REF.	BLOCK	NICKNAME	REF. DESCRIPTION / CROSS REFERENCES
			-] [- 26
%I0012	ALARM	Q104	Safety switch on M104
			-] [- 26
%I0013	ALARM	Q105	Safety switch on M105
			-] [- 26
%I0014	ALARM	Q106	Safety switch on M106
			-] [- 26
%I0015	ALARM	Q111	Safety switch on M111
			-] [- 26
%I0016	ALARM	Q112	Safety switch on M112
			-] [- 26
%I0017	ALARM	Q001	Overl. Trip on M101
			-] [- 24
%I0018	ALARM	Q002	Overl. Trip on M102
			-] [- 24
%I0019	ALARM	Q003	Overl. Trip on M103
			-] [- 24
%I0020	ALARM	Q004	Overl. Trip on M104
			-] [- 24
%I0021	ALARM	Q005	Overl. Trip on M105
			-] [- 24
%I0022	ALARM	Q006	Overl. Trip on M106
			-] [- 24
%I0023	ALARM	Q011	Overl. Trip on M111
			-] [- 24
%I0024	ALARM	Q012	Overl. Trip on M112
			-] [- 24
%I0025	LINE	PC1	Pack coming fill 1
			-] [- 6
	EXT		-]/[- 6
%I0027	COMMON	DE11	Ready signal DE11
			-] [- 29,30,32,33
	LINE		-] [- 14
			-]/[- 24,26,53
	GREEN		-] [- 5
	EXT		-] [- 9
	PLMS		-]/[- 62
%I0028	COMMON	DE12	Ready signal DE12
			-] [- 29,30,32,33
	LINE		-] [- 15
			-]/[- 24,26
	GREEN		-] [- 5
	EXT		-] [- 10
%I0032	PLMS		-] [- 21
			-]/[- 22
%I0033	COMMON	B101	Count. photo. M101
			-] [- 23
	LINE		-] [- 19,20,23,26
	PLMS		-] [- 14,80
%I0034	LINE	B102	Queue photo. M101
			-] [- 27,51
	EXT		-] [- 9,10
%I0035	COMMON	B103	Count. photo. M102
			-] [- 23
	LINE		-] [- 8,48,49,52,56
	PLMS		-] [- 14,80
%I0036	LINE	B104	Queue photo. M102
			-] [- 57
	EXT		-] [- 9
%I0037	LINE	B105	Count. photo. M103
			-] [- 9,80,81,84,86
%I0038	LINE	B106	Queue photo. M103
			-] [- 87
%I0039	LINE	B107	Count. photo. M104
			-] [- 10,109,110,113,115
%I0040	LINE	B108	Queue photo. M104
			-] [- 116
%I0041	LINE	B109	Count. photo. M105
			-] [- 11,139,140,143,145
%I0042	LINE	B110	Queue photo. M105
			-] [- 146
%I0043	LINE	B111	Count. photo. M106
			-] [- 12,168,169,172,174
	PLMS		-] [- 75
%I0044	LINE	B112	Queue photo. M106
			-] [- 175
	PLMS		-] [- 14
			-]/[- 6
%I0045	COMMON	B113	Count. photo. M101 by-pass
			-] [- 23
	LINE		-] [- 7,23,26
	PLMS		-] [- 14,80
%I0046	COMMON	B114	Ref pulse photo. DE11
			-] [- 28
			-]/[- 24
	LINE		-] [- 22,51
%I0047	COMMON	B115	Ref pulse photo. DE12
			-] [- 28
			-]/[- 24
	LINE		-] [- 22
%I0049	BRAKE	B121	Queue photo. brake 1
			-] [- 5

REF.	BLOCK	NICKNAME	REF. DESCRIPTION / CROSS REFERENCES
%I0050	BRAKE	B122	Count. photo. brake 1
			-] [- 6
%I0051	BRAKE	B123	Queue photo. brake 2
			-] [- 9
%I0052	BRAKE	B124	Count. photo. brake 2
			-] [- 10
%I0053	LINE	B131	Start photo. M111
			-] [- 198
			-]/[- 199
%I0054	LINE	B132	Stop photo. M111
			-] [- 22,198
%I0057	COMMON	B151	Switch 1
			-] [- 24,28,29,30,32,33
			-]/[- 24,28,29,30,32,33
	LINE		-] [- 22,23,24,26,199
			-]/[- 22,23,24,26,198
	GREEN		-] [- 5
			-]/[- 5
	EXT		-] [- 10
			-]/[- 9
	PLMS		-] [- 14,80
			-]/[- 14,80

OUTPUT (%Q) GLOBAL CROSS REFERENCES

REF.	BLOCK	NICKNAME	REF. DESCRIPTION / CROSS REFERENCES
%Q0001	COMMON	H20S	Step up
			-( ) 15
%Q0002	COMMON	H21S	Step down
			-( ) 16
%Q0003	ALARM	H22S	Reset alarm/lamp test
			-( ) 20
%Q0004	ALARM	H001	Alarm emerg. stop
			-]/[- 8,12
			-( ) 10
%Q0005	ALARM	H002	Alarm motor overl.
			-]/[- 13
			-( ) 15
%Q0006	ALARM	H003	Alarm safe. switch
			-]/[- 17
			-( ) 19
%Q0009	GREEN	H101_1	Ready signal green
			-( ) 5
%Q0010	ALARM	H101_2	Warning signal yellow
			-( ) 21
%Q0011	ALARM	H101_3	Alarm signal red
			-( ) 11
%Q0017	LINE	G011-SF	Freque.conv. M101
			FBIO 46,78
%Q0018	LINE	G011-S1	Freque.conv. M101
			FBIO (46),(78)
%Q0019	LINE	G011-S2	Freque.conv. M101
			FBIO (46),(78)
%Q0020	LINE	G011-S3	Freque.conv. M101
			FBIO (46),(78)
%Q0021	LINE	G012-SF	Freque.conv. M102
			FBIO (46),(78)
%Q0022	LINE	G012-S1	Freque.conv. M102
			FBIO (46),(78)
%Q0023	LINE	G012-S2	Freque.conv. M102
			FBIO (46),(78)
%Q0024	LINE	G012-S3	Freque.conv. M102
			FBIO (46),(78)
%Q0025	LINE	G013-SF	Freque.conv. M103
			FBIO (46),(78),107,137
%Q0026	LINE	G013-S1	Freque.conv. M103
			FBIO (46),(78),(107),(137)
%Q0027	LINE	G013-S2	Freque.conv. M103
			FBIO (46),(78),(107),(137)
%Q0028	LINE	G013-S3	Freque.conv. M103
			FBIO (46),(78),(107),(137)
%Q0029	LINE	G014-SF	Freque.conv. M104
			FBIO (46),(78),(107),(137)
%Q0030	LINE	G014-S1	Freque.conv. M104
			FBIO (46),(78),(107),(137)
%Q0031	LINE	G014-S2	Freque.conv. M104
			FBIO (46),(78),(107),(137)
%Q0032	LINE	G014-S3	Freque.conv. M104
			FBIO (46),(78),(107),(137)
%Q0033	LINE	G015-SF	Freque.conv. M105
			FBIO (107),(137),166,196
%Q0034	LINE	G015-S1	Freque.conv. M105
			FBIO (107),(137),(166),(196)
%Q0035	LINE	G015-S2	Freque.conv. M105
			FBIO (107),(137),(166),(196)
%Q0036	LINE	G015-S3	Freque.conv. M105
			FBIO (107),(137),(166),(196)
%Q0037	LINE	G016-SF	Freque.conv. M106
			FBIO (107),(137),(166),(196)
%Q0038	LINE	G016-S1	Freque.conv. M106

```
REF.     BLOCK    NICKNAME  REF. DESCRIPTION / CROSS REFERENCES
-------  -------  -------- -----------------------------------
                           FBIO  (107),(137),(166),(196)
%Q0039   LINE     G016-S2  Freque.conv. M106
                           FBIO  (107),(137),(166),(196)
%Q0040   LINE     G016-S3  Freque.conv. M106
                           FBIO  (107),(137),(166),(196)
%Q0041   COMMON   K001     Main  contac.
                           -( )  43
         LINE              FBIO  (166),(196)
         PLMS              -] [- 16,81
%Q0042   LINE     K011     Contact for M111
                           -] [- 200
                           -( )  201
                           FBIO  (166),(196)
%Q0043   LINE     K012     Contact for M112
                           -] [- 205
                           -( )  206
                           FBIO  (166),(196)
%Q0044   LINE              FBIO  (166),(196)
%Q0045   LINE              FBIO  (166),(196)
%Q0046   LINE     Y101     Brake 1
                           FBIO  (166),(196)
         BRAKE             -( )  7
%Q0047   LINE     Y102     Brake 2
                           FBIO  (166),(196)
         BRAKE             -( )  11
%Q0048   LINE              FBIO  (166),(196)
%Q0049   COMMON   K080     Fan cabinet
                           -( )  41
%Q0050   EXT      K081     Ready signal to filler
                           -( )  7
%Q0051   EXT      K082     Package coming to DE11
                           -( )  12
%Q0052   EXT      K083     Package coming to DE12
                           -( )  13
%Q0053   CHAIN    K084     Start timer 1 chain lubric.
                           -( )  7
%Q0057   CHAIN    Y951     Chain lubric. conv.
                           -] [- 7
                           -( )  5
%Q0058   CHAIN    Y952     Chain lubric. conv. by-pass
                           -] [- 7
                           -( )  6
```

INTERNAL (%M) GLOBAL CROSS REFERENCES

```
REF.     BLOCK    NICKNAME  REF. DESCRIPTION / CROSS REFERENCES
-------  -------  -------- -----------------------------------
%M0001   COMMON            Slow flash
                           -] [- 6,15
                           -]/[- 5
                           -(S)  5
                           -(R)  6
         LINE              -] [- 6
%M0003   COMMON            Fast flash
                           -] [- 8
                           -]/[- 7
                           -(S)  7
                           -(R)  8
         ALARM             -] [- 10,11,15,19,20,21
%M0006   COMMON            Lamp test
                           -] [- 15,16
         ALARM             -] [- 10,15,19,20,29
                           -( )  28
%M0049   COMMON            Alarm em.stop
                           -]/[- 14,15
         ALARM             -] [- 10,11,20
                           -]/[- 10,11,21
                           -(S)  8
                           -(R)  9
         PLMS              -] [- 38
                           -]/[- 9
%M0051   COMMON            Alarm overl. trip
                           -]/[- 14,15
         ALARM             -] [- 15,20,21
                           -]/[- 15,21
                           -(S)  13
                           -(R)  14
         PLMS              -] [- 40
                           -]/[- 9
%M0053   COMMON            Alarm conv. switch
                           -]/[- 14,15
         ALARM             -] [- 19,20,21
                           -]/[- 19,21
                           -(S)  17
                           -(R)  18
         PLMS              -] [- 42
                           -]/[- 9
%M0077   LINE              Group trip overl.
                           -]/[- 5
         ALARM             -] [- 12
                           -( )  24
```

```
REF.     BLOCK    NICKNAME  REF. DESCRIPTION / CROSS REFERENCES
-------  -------  --------  ------------------------------------
%M0078   LINE               Group safety switch
                            -] [- 5
         ALARM              -]/[- 16
                            -( )  26
%M0085   ALARM              Relay check em.stop
                            -] [- 7
                            -(S)  5
                            -(R)  6
%M0086   COMMON             Tripp. em.stop
                            -]/[- 14,15
         ALARM              -] [- 8,10,11
                            -]/[- 21
                            -( )  7
         PLMS               -]/[- 9
%M0087   COMMON             Tripp. overl.
                            -]/[- 14,15
         ALARM              -] [- 13,15,21
                            -( )  12
         PLMS               -]/[- 9
%M0088   COMMON             Tripp. conv. switch
                            -]/[- 14,15
         ALARM              -] [- 17,19,21
                            -( )  16
         PLMS               -]/[- 9
%M0100   COMMON             Step 0
                            -] [- 10,15,41,43
                            -]/[- 16
                            -(S)  12
                            -(R)  13
         ALARM              -] [- 8,10,11,12,13,15,17,19,20,21
                            -]/[- 9,14,18
         PLMS               -] [- 25,27
                            -]/[- 24,28
%M0101   COMMON             Step 1
                            -] [- 14,15
                            -]/[- 13
                            -( )  14
         LINE               -] [- 5
         PLMS               -] [- 9,28,30,76,81
                            -]/[- 27,31
%M0111   COMMON             Layout 1
                            -( )  36
         LINE               -] [- 45,51,53
                            -]/[- 51,54,74
         EXT                -] [- 9
                            -]/[- 9
         ALARM              -] [- 26
                            -]/[- 24
         PLMS               -] [- 14,80
%M0112   COMMON             Layout 2
                            -( )  37
%M0113   COMMON             Layout 3
                            -( )  38
         LINE               -] [- 22,24,26
%M0114   COMMON             Layout 4
                            -( )  39
         LINE               -] [- 7,22,24,26,199
                            -]/[- 198
         GREEN              -] [- 5
         ALARM              -] [- 24
                            -]/[- 26
%M0151   COMMON             Ref. pulse
                            -]/[- 27
                            -( )  27
         LINE               -] [- 31,61,91,120,150,179
%M0152   COMMON             Cond. ref pulse
                            -] [- 29,30
                            -]/[- 32,33
                            -( )  28
%M0153   COMMON             95% ref. pulse
                            -] [- 19
                            -( )  29
%M0154   COMMON             90% ref. pulse
                            -] [- 20,31
                            -( )  30
%M0155   COMMON             Delay ref. pulse
                            -] [- 29
                            -( )  31
%M0156   COMMON             105% ref. pulse
                            -] [- 21
                            -( )  32
%M0157   COMMON             115% ref. pulse
                            -] [- 22,34
                            -( )  33
%M0158   COMMON             Delay ref. pulse
                            -] [- 32
                            -( )  34
%M0160   COMMON             Package at line
                            -] [- 24
                            -( )  23
%M0161   COMMON             No signal ref. photoc.
                            -] [- 25
```

```
REF.     BLOCK    NICKNAME  REF. DESCRIPTION / CROSS REFERENCES
-------  -------  --------  -----------------------------------
                            -( )  24
%M0210   BRAKE             Cond. Y101
                            -] [- 7
                            -( )  5
%M0211   BRAKE             Pulsing time Y101
                            -] [- 7
                            -( )  6
%M0220   BRAKE             Cond. Y102
                            -] [- 11
                            -( )  9
%M0221   BRAKE             Pulsing time Y102
                            -] [- 11
                            -( )  10
%M0300   LINE              Start ok line 1
                            -] [- 201,206
                            -]/[- 45,76,106,135,165,194
                            -( )  5
         GREEN              -] [- 5
         EXT                -] [- 6,12,13
%M0301   LINE              Start line 1
                            -] [- 201,206
                            -]/[- 45,76,106,135,165,194
                            -( )  17
%M0302   EXT               Delay not ready
                            -]/[- 6
                            -( )  5
%M0303   EXT               Ready signal
                            -] [- 7
                            -( )  6
         PLMS               -] [- 55
%M0310   LINE              Low speed ref. photo.
                            -] [- 25
                            -( )  22
%M0311   LINE              Low speed count. photo.
                            -] [- 25
                            -( )  23
%M0312   LINE              Low speed M101
                            -] [- 21,43
                            -]/[- 31
                            -( )  25
%M0313   LINE              Stop cond. count. photo.
                            -] [- 28
                            -]/[- 29
                            -( )  26
%M0314   LINE              Stop cond. queue photo.
                            -] [- 28
                            -( )  27
%M0315   LINE              Stop M101
                            -] [- 45
                            -(S)  28
                            -(R)  29
%M0316   LINE              M101 running
                            -] [- 31
                            -]/[- 54
                            -( )  30
         CHAIN              -] [- 5
         PLMS               -] [- 44
%M0317   LINE              Low speed cond. from DE
                            -] [- 25
                            -( )  24
%M0320   LINE              Low speed queue photo.
                            -] [- 55
                            -( )  51
%M0321   LINE              Low speed count. photo
                            -] [- 55
                            -( )  52
%M0322   LINE              Low speed M102
                            -] [- 50,73
                            -]/[- 61
                            -( )  55
%M0323   LINE              Stop cond. M102
                            -] [- 58
                            -]/[- 59
                            -( )  56
%M0324   LINE              Stop cond. M102
                            -] [- 58
                            -( )  57
%M0325   LINE              Stop M102
                            -] [- 76
                            -(S)  58
                            -(R)  59
%M0326   LINE              M102 running
                            -] [- 61
                            -]/[- 85,86
                            -( )  60
         CHAIN              -] [- 5
         PLMS               -] [- 44
                            -]/[- 44
%M0327   LINE              Cond.1 low speed/stop
                            -] [- 55,56
                            -( )  53
%M0328   LINE              Cond.2 low speed/stop
```

```
REF.     BLOCK    NICKNAME  REF. DESCRIPTION / CROSS REFERENCES
-------  -------  --------  ------------------------------------
                            -] [- 55,56
                            -( )  54
%M0330   LINE               Cond. low speed M103
                            -] [- 85
                            -( )  83
%M0331   LINE               Cond. low speed M103
                            -] [- 85
                            -( )  84
%M0332   LINE               Low speed M103
                            -] [- 82,103
                            -]/[- 91
                            -( )  85
%M0333   LINE               Stop cond. M103
                            -] [- 88
                            -]/[- 89
                            -( )  86
%M0334   LINE               Stop cond. M103
                            -] [- 88
                            -( )  87
%M0335   LINE               Stop M103
                            -] [- 106
                            -(S)  88
                            -(R)  89
         PLMS               -] [- 55
%M0336   LINE               M103 running
                            -] [- 91
                            -]/[- 114,115
                            -( )  90
         CHAIN              -] [- 5
         PLMS               -] [- 44
                            -]/[- 44
%M0340   LINE               Cond. low speed M104
                            -] [- 114
                            -( )  112
%M0341   LINE               Cond. low speed M104
                            -] [- 114
                            -( )  113
%M0342   LINE               Low speed 104
                            -] [- 111,132
                            -]/[- 120
                            -( )  114
%M0343   LINE               Stop cond M104
                            -] [- 117
                            -]/[- 118
                            -( )  115
%M0344   LINE               Stop cond M104
                            -] [- 117
                            -( )  116
%M0345   LINE               Stop M104
                            -] [- 135
                            -(S)  117
                            -(R)  118
         PLMS               -] [- 55
%M0346   LINE               M104 running
                            -] [- 120
                            -]/[- 144,145
                            -( )  119
         CHAIN              -] [- 5
         PLMS               -] [- 44
                            -]/[- 44
%M0350   LINE               Cond. low speed M105
                            -] [- 144
                            -( )  142
%M0351   LINE               Cond. low speed M105
                            -] [- 144
                            -( )  143
%M0352   LINE               Low speed M105
                            -] [- 141,162
                            -]/[- 150
                            -( )  144
%M0353   LINE               Stop cond M105
                            -] [- 147
                            -]/[- 148
                            -( )  145
%M0354   LINE               Stop cond. M105
                            -] [- 147
                            -( )  146
%M0355   LINE               Stop M105
                            -] [- 165
                            -(S)  147
                            -(R)  148
         EXT                -] [- 5
         PLMS               -] [- 55,72
                            -]/[- 10,16
%M0356   LINE               M105 running
                            -] [- 150
                            -]/[- 173,174
                            -( )  149
         CHAIN              -] [- 5
         PLMS               -] [- 44
                            -]/[- 44
%M0360   LINE               Cond. low speed M106
```

```
REF.     BLOCK    NICKNAME  REF. DESCRIPTION / CROSS REFERENCES
-------  -------  --------  -----------------------------------
                            -] [- 173
                            -( )  171
%M0361   LINE               Cond. low speed M106
                            -] [- 173
                            -( )  172
%M0362   LINE               Low speed M106
                            -] [- 170,191
                            -]/[- 179
                            -( )  173
%M0363   LINE               Stop cond M106
                            -] [- 176
                            -]/[- 177
                            -( )  174
%M0364   LINE               Stop cond. M106
                            -] [- 176
                            -( )  175
%M0365   LINE               Stop M106
                            -] [- 194
                            -(S)  176
                            -(R)  177
         PLMS               -] [- 55
%M0366   LINE               M106 running
                            -] [- 179
                            -( )  178
         CHAIN              -] [- 5
         PLMS               -]/[- 44
%M0375   LINE               Stop M111
                            -]/[- 201
                            -(S)  198
                            -(R)  199
%M0376   LINE               M111 running
                            -]/[- 24,26
                            -( )  200
         CHAIN              -] [- 6
%M0385   LINE               Stop M112
                            -]/[- 206
                            -(S)  203
                            -(R)  204
%M0386   LINE               M112 running
                            -( )  205
%M0411   EXT                Start infeed DE11
                            -] [- 12
                            -( )  9
%M0412   EXT                Start infeed DE12
                            -] [- 13
                            -( )  10
%M0501   GREEN              Lamp test green
                            -] [- 5
         ALARM              -] [- 29,30
                            -( )  29
%M0502   ALARM              Lamp test yellow
                            -] [- 21,30,31
                            -]/[- 29
                            -( )  30
%M0503   ALARM              Lamp test red
                            -] [- 11
                            -]/[- 29,30
                            -( )  31
```

========== TEMPORARY (%T) GLOBAL CROSS REFERENCES

```
REF.     BLOCK    NICKNAME  REF. DESCRIPTION / CROSS REFERENCES
-------  -------  --------  -----------------------------------
%T0001   COMMON             Step up if step 0
                            -] [- 14
                            -(^)  10
%T0002   COMMON             Step down
                            -] [- 13
                            -(^)  11
         PLMS               -] [- 59
%T0003   COMMON             Step up
                            -] [- 10,12
                            -(^)  9
         PLMS               -] [- 58
%T0004   ALARM              Alarm reset
                            -] [- 9,14,18
                            -(^)  22
%T0100   LINE               Pack coming filler
                            -] [- 16
                            -(^)  6
%T0101   LINE               Pack at B113
                            -] [- 16
                            -(^)  7
%T0102   LINE               Pack at B103
                            -] [- 16
                            -(^)  8
%T0103   LINE               Pack at B105
                            -] [- 16
                            -(^)  9
%T0104   LINE               Pack at B107
                            -] [- 16
```

```
REF.     BLOCK    NICKNAME   REF. DESCRIPTION / CROSS REFERENCES
-------  -------  --------  -----------------------------------
                            -(^)  10
%T0105   LINE               Pack at B109
                            -(^)  11
%T0106   LINE               Pack at B111
                            -] [- 16
                            -(^)  12
%T0107   LINE               Auto run
                            -] [- 16
                            -(^)  13
%T0108   LINE               DE 11 ready
                            -] [- 17
                            -(^)  14
         EXT                -] [- 9
%T0109   LINE               DE 12 ready
                            -] [- 17
                            -(^)  15
         EXT                -] [- 10
%T0110   LINE               Count.  pulse M101
                            -] [- 32
                            -(^)  19
         PLMS               -]/[- 15
%T0111   LINE               No sep. pulse M101
                            -] [- 33
                            -(^)  20
%T0112   LINE               Queue   pulse M101
                            -] [- 34
                            -(^)  21
%T0120   LINE               Count.  pulse M102
                            -] [- 62
                            -(^)  48
         PLMS               -]/[- 15
%T0121   LINE               No sep. pulse M102
                            -] [- 63
                            -(^)  49
%T0122   LINE               Queue   pulse M102
                            -] [- 64
                            -(^)  50
%T0130   LINE               Count.  pulse M103
                            -] [- 92
                            -(^)  80
         PLMS               -]/[- 15
%T0131   LINE               No sep. pulse M103
                            -] [- 93
                            -(^)  81
%T0132   LINE               Queue   pulse M103
                            -] [- 94
                            -(^)  82
%T0140   LINE               Count.  pulse M104
                            -] [- 121
                            -(^)  109
         PLMS               -]/[- 15
%T0141   LINE               No sep. pulse M104
                            -] [- 122
                            -(^)  110
%T0142   LINE               Queue   pulse M104
                            -] [- 123
                            -(^)  111
%T0150   LINE               Count.  pulse M105
                            -] [- 151
                            -(^)  139
         PLMS               -]/[- 15
%T0151   LINE               No sep. pulse M105
                            -] [- 152
                            -(^)  140
%T0152   LINE               Queue   pulse M105
                            -] [- 153
                            -(^)  141
%T0160   LINE               Count.  pulse M106
                            -] [- 180
                            -(^)  168
         PLMS               -]/[- 15
%T0161   LINE               No sep. pulse M106
                            -] [- 181
                            -(^)  169
%T0162   LINE               Queue   pulse M106
                            -] [- 182
                            -(^)  170
%T0254   PLMS     B104--    Pulse package counter
                            -] [- 76
                            -(v)  75
%T0255   PLMS     B121-     Pulse package counter
                            -] [- 81
                            -(v)  80
```

```
================================================================================
========== REGISTER  (%R)  GLOBAL CROSS REFERENCES
================================================================================
REF.     BLOCK    NICKNAME   REF. DESCRIPTION / CROSS REFERENCES
-------  -------  --------  -----------------------------------
%R0001   COMMON             Slow flash pause
                            FBIO  5
%R0002   COMMON             FBIO  (5)
```

REF.	BLOCK	NICKNAME	REF. DESCRIPTION / CROSS REFERENCES
%R0003	COMMON		FBIO (5)
%R0004	COMMON		Slow flash pulse
			FBIO 6
%R0005	COMMON		FBIO (6)
%R0006	COMMON		FBIO (6)
%R0007	COMMON		Fast flash pause
			FBIO 7
%R0008	COMMON		FBIO (7)
%R0009	COMMON		FBIO (7)
%R0010	COMMON		Fast flash pulse
			FBIO 8
%R0011	COMMON		FBIO (8)
%R0012	COMMON		FBIO (8)
%R0013	ALARM		FBIO 5
%R0014	ALARM		FBIO (5)
%R0015	ALARM		FBIO (5)
%R0016	ALARM		FBIO 12
%R0017	ALARM		FBIO (12)
%R0018	ALARM		FBIO (12)
%R0019	ALARM		FBIO 28
%R0020	ALARM		FBIO (28)
%R0021	ALARM		FBIO (28)
%R0022	ALARM		FBIO 30
%R0023	ALARM		FBIO (30)
%R0024	ALARM		FBIO (30)
%R0025	ALARM		FBIO 31
%R0026	ALARM		FBIO (31)
%R0027	ALARM		FBIO (31)
%R0028	ALARM		FBIO 31
%R0029	ALARM		FBIO (31)
%R0030	ALARM		FBIO (31)
%R0051	COMMON		FBIO 23
%R0052	COMMON		FBIO (23)
%R0053	COMMON		FBIO (23)
%R0054	COMMON		FBIO 24
%R0055	COMMON		FBIO (24)
%R0056	COMMON		FBIO (24)
%R0057	COMMON		FBIO 27
%R0058	COMMON		FBIO (27)
%R0059	COMMON		FBIO (27)
%R0060	COMMON		FBIO 28
%R0061	COMMON		FBIO (28)
%R0062	COMMON		FBIO (28)
%R0063	COMMON		FBIO 29
%R0064	COMMON		FBIO (29)
%R0065	COMMON		FBIO (29)
%R0066	COMMON		FBIO 30
%R0067	COMMON		FBIO (30)
%R0068	COMMON		FBIO (30)
%R0069	COMMON		FBIO 31
%R0070	COMMON		FBIO (31)
%R0071	COMMON		FBIO (31)
%R0072	COMMON		FBIO 32
%R0073	COMMON		FBIO (32)
%R0074	COMMON		FBIO (32)
%R0075	COMMON		FBIO 33
%R0076	COMMON		FBIO (33)
%R0077	COMMON		FBIO (33)
%R0078	COMMON		FBIO 34
%R0079	COMMON		FBIO (34)
%R0080	COMMON		FBIO (34)
%R0200	LINE		FBIO 17
%R0201	LINE		FBIO (17)
%R0202	LINE		FBIO (17)
%R0203	EXT		FBIO 5
%R0204	EXT		FBIO (5)
%R0205	EXT		FBIO (5)
%R0209	BRAKE		FBIO 5
%R0210	BRAKE		FBIO (5)
%R0211	BRAKE		FBIO (5)
%R0212	BRAKE		FBIO 5
%R0213	BRAKE		FBIO (5)
%R0214	BRAKE		FBIO (5)
%R0215	BRAKE		FBIO 6
%R0216	BRAKE		FBIO (6)
%R0217	BRAKE		FBIO (6)
%R0218	BRAKE		FBIO 6
%R0219	BRAKE		FBIO (6)
%R0220	BRAKE		FBIO (6)
%R0221	BRAKE		FBIO 9
%R0222	BRAKE		FBIO (9)
%R0223	BRAKE		FBIO (9)
%R0224	BRAKE		FBIO 9
%R0225	BRAKE		FBIO (9)
%R0226	BRAKE		FBIO (9)
%R0227	BRAKE		FBIO 10
%R0228	BRAKE		FBIO (10)
%R0229	BRAKE		FBIO (10)
%R0230	BRAKE		FBIO 10
%R0231	BRAKE		FBIO (10)
%R0232	BRAKE		FBIO (10)
%R0245	EXT		FBIO 9

REF.	BLOCK	NICKNAME	REF. DESCRIPTION / CROSS REFERENCES
%R0246	EXT		FBIO (9)
%R0247	EXT		FBIO (9)
%R0248	EXT		FBIO 10
%R0249	EXT		FBIO (10)
%R0250	EXT		FBIO (10)
%R0300	LINE		FBIO 19
%R0301	LINE		FBIO (19)
%R0302	LINE		FBIO (19)
%R0303	LINE		FBIO 20
%R0304	LINE		FBIO (20)
%R0305	LINE		FBIO (20)
%R0306	LINE		FBIO 21
%R0307	LINE		FBIO (21)
%R0308	LINE		FBIO (21)
%R0309	LINE		FBIO 22
%R0310	LINE		FBIO (22)
%R0311	LINE		FBIO (22)
%R0312	LINE		FBIO 23
%R0313	LINE		FBIO (23)
%R0314	LINE		FBIO (23)
%R0315	LINE		FBIO 26
%R0316	LINE		FBIO (26)
%R0317	LINE		FBIO (26)
%R0318	LINE		FBIO 26
%R0319	LINE		FBIO (26)
%R0320	LINE		FBIO (26)
%R0321	LINE		FBIO 27
%R0322	LINE		FBIO (27)
%R0323	LINE		FBIO (27)
%R0324	LINE		FBIO 27
%R0325	LINE		FBIO (27)
%R0326	LINE		FBIO (27)
%R0327	LINE		FBIO 29
%R0328	LINE		FBIO (29)
%R0329	LINE		FBIO (29)
%R0330	LINE		FBIO 24
%R0331	LINE		FBIO (24)
%R0332	LINE		FBIO (24)
%R0351	LINE		FBIO 48
%R0352	LINE		FBIO (48)
%R0353	LINE		FBIO (48)
%R0354	LINE		FBIO 49
%R0355	LINE		FBIO (49)
%R0356	LINE		FBIO (49)
%R0357	LINE		FBIO 50
%R0358	LINE		FBIO (50)
%R0359	LINE		FBIO (50)
%R0363	LINE		FBIO 51
%R0364	LINE		FBIO (51)
%R0365	LINE		FBIO (51)
%R0366	LINE		FBIO 52
%R0367	LINE		FBIO (52)
%R0368	LINE		FBIO (52)
%R0369	LINE		FBIO 56
%R0370	LINE		FBIO (56)
%R0371	LINE		FBIO (56)
%R0372	LINE		FBIO 56
%R0373	LINE		FBIO (56)
%R0374	LINE		FBIO (56)
%R0375	LINE		FBIO 57
%R0376	LINE		FBIO (57)
%R0377	LINE		FBIO (57)
%R0378	LINE		FBIO 57
%R0379	LINE		FBIO (57)
%R0380	LINE		FBIO (57)
%R0381	LINE		FBIO 59
%R0382	LINE		FBIO (59)
%R0383	LINE		FBIO (59)
%R0384	LINE		FBIO 53
%R0385	LINE		FBIO (53)
%R0386	LINE		FBIO (53)
%R0400	LINE		FBIO 80
%R0401	LINE		FBIO (80)
%R0402	LINE		FBIO (80)
%R0403	LINE		FBIO 81
%R0404	LINE		FBIO (81)
%R0405	LINE		FBIO (81)
%R0406	LINE		FBIO 82
%R0407	LINE		FBIO (82)
%R0408	LINE		FBIO (82)
%R0415	LINE		FBIO 83
%R0416	LINE		FBIO (83)
%R0417	LINE		FBIO (83)
%R0418	LINE		FBIO 84
%R0419	LINE		FBIO (84)
%R0420	LINE		FBIO (84)
%R0421	LINE		FBIO 86
%R0422	LINE		FBIO (86)
%R0423	LINE		FBIO (86)
%R0424	LINE		FBIO 86
%R0425	LINE		FBIO (86)
%R0426	LINE		FBIO (86)

REF.	BLOCK	NICKNAME	REF. DESCRIPTION / CROSS REFERENCES
%R0427	LINE		FBIO 87
%R0428	LINE		FBIO (87)
%R0429	LINE		FBIO (87)
%R0430	LINE		FBIO 87
%R0431	LINE		FBIO (87)
%R0432	LINE		FBIO (87)
%R0433	LINE		FBIO 89
%R0434	LINE		FBIO (89)
%R0435	LINE		FBIO (89)
%R0451	LINE		FBIO 109
%R0452	LINE		FBIO (109)
%R0453	LINE		FBIO (109)
%R0454	LINE		FBIO 110
%R0455	LINE		FBIO (110)
%R0456	LINE		FBIO (110)
%R0457	LINE		FBIO 111
%R0458	LINE		FBIO (111)
%R0459	LINE		FBIO (111)
%R0463	LINE		FBIO 112
%R0464	LINE		FBIO (112)
%R0465	LINE		FBIO (112)
%R0466	LINE		FBIO 113
%R0467	LINE		FBIO (113)
%R0468	LINE		FBIO (113)
%R0469	LINE		FBIO 115
%R0470	LINE		FBIO (115)
%R0471	LINE		FBIO (115)
%R0472	LINE		FBIO 115
%R0473	LINE		FBIO (115)
%R0474	LINE		FBIO (115)
%R0475	LINE		FBIO 116
%R0476	LINE		FBIO (116)
%R0477	LINE		FBIO (116)
%R0478	LINE		FBIO 116
%R0479	LINE		FBIO (116)
%R0480	LINE		FBIO (116)
%R0481	LINE		FBIO 118
%R0482	LINE		FBIO (118)
%R0483	LINE		FBIO (118)
%R0500	LINE		FBIO 139
%R0501	LINE		FBIO (139)
%R0502	LINE		FBIO (139)
%R0503	LINE		FBIO 140
%R0504	LINE		FBIO (140)
%R0505	LINE		FBIO (140)
%R0506	LINE		FBIO 141
%R0507	LINE		FBIO (141)
%R0508	LINE		FBIO (141)
%R0515	LINE		FBIO 142
%R0516	LINE		FBIO (142)
%R0517	LINE		FBIO (142)
%R0518	LINE		FBIO 143
%R0519	LINE		FBIO (143)
%R0520	LINE		FBIO (143)
%R0521	LINE		FBIO 145
%R0522	LINE		FBIO (145)
%R0523	LINE		FBIO (145)
%R0524	LINE		FBIO 145
%R0525	LINE		FBIO (145)
%R0526	LINE		FBIO (145)
%R0527	LINE		FBIO 146
%R0528	LINE		FBIO (146)
%R0529	LINE		FBIO (146)
%R0530	LINE		FBIO 146
%R0531	LINE		FBIO (146)
%R0532	LINE		FBIO (146)
%R0533	LINE		FBIO 148
%R0534	LINE		FBIO (148)
%R0535	LINE		FBIO (148)
%R0551	LINE		FBIO 168
%R0552	LINE		FBIO (168)
%R0553	LINE		FBIO (168)
%R0554	LINE		FBIO 169
%R0555	LINE		FBIO (169)
%R0556	LINE		FBIO (169)
%R0557	LINE		FBIO 170
%R0558	LINE		FBIO (170)
%R0559	LINE		FBIO (170)
%R0563	LINE		FBIO 171
%R0564	LINE		FBIO (171)
%R0565	LINE		FBIO (171)
%R0566	LINE		FBIO 172
%R0567	LINE		FBIO (172)
%R0568	LINE		FBIO (172)
%R0569	LINE		FBIO 174
%R0570	LINE		FBIO (174)
%R0571	LINE		FBIO (174)
%R0572	LINE		FBIO 174
%R0573	LINE		FBIO (174)
%R0574	LINE		FBIO (174)
%R0575	LINE		FBIO 175
%R0576	LINE		FBIO (175)

REF.	BLOCK	NICKNAME	REF. DESCRIPTION / CROSS REFERENCES
%R0577	LINE		FBIO (175)
%R0578	LINE		FBIO 175
%R0579	LINE		FBIO (175)
%R0580	LINE		FBIO (175)
%R0581	LINE		FBIO 177
%R0582	LINE		FBIO (177)
%R0583	LINE		FBIO (177)
%R0600	LINE		FBIO 198
%R0601	LINE		FBIO (198)
%R0602	LINE		FBIO (198)
%R0603	LINE		FBIO 199
%R0604	LINE		FBIO (199)
%R0605	LINE		FBIO (199)
%R0606	LINE		FBIO 203
%R0607	LINE		FBIO (203)
%R0608	LINE		FBIO (203)
%R0609	LINE		FBIO 204
%R0610	LINE		Count reg. M101
			FBIO (204)
%R0611	LINE		Speed reg. M101
			FBIO (204)
%R0660	CHAIN		Count reg. M106
			FBIO 5
%R0661	CHAIN		Speed reg. M106
			FBIO (5)
%R0662	CHAIN		FBIO (5)
%R0663	CHAIN		FBIO 6
%R0664	CHAIN		FBIO (6)
%R0665	CHAIN		FBIO (6)
%R0666	CHAIN		FBIO 7
%R0667	CHAIN		FBIO (7)
%R0668	CHAIN		FBIO (7)
%R0810	LINE		FBIO 31,32,33,34,35,37,38,39,40,41,42
%R0811	LINE		FBIO 30,36,37,38,39,40,41,42,43,44,45,46,74
%R0820	LINE		FBIO 61,62,63,64,65,67,68,69,70,71,72
%R0821	LINE		FBIO 60,66,67,68,69,70,71,72,73,74,75,76,77,78,104
%R0830	LINE		FBIO 91,92,93,94,95,97,98,99,100,101,102
%R0831	LINE		FBIO 90,96,97,98,99,100,101,102,103,104,105,106,107,133
%R0840	LINE		FBIO 120,121,122,123,124,126,127,128,129,130,131
%R0841	LINE		FBIO 119,125,126,127,128,129,130,131,132,133,134,135,136,137,163
%R0850	LINE		FBIO 150,151,152,153,154,156,157,158,159,160,161
%R0851	LINE		FBIO 149,155,156,157,158,159,160,161,162,163,164,165,166,192
%R0860	LINE		FBIO 179,180,181,182,183,185,186,187,188,189,190
%R0861	LINE		FBIO 178,184,185,186,187,188,189,190,191,192,193,194,195,196
%R0920	PLMS		Package in
			FBIO 77,78,85
%R0921	PLMS		Package out
			FBIO 82,83,(85)
%R0922	PLMS		Down time signals
			FBIO 11,34,38,40,42,45,47,49,51,52
%R0923	PLMS		Down time signals
			FBIO 11,34
%R0924	PLMS		Miscel-laneous signals
			FBIO 7,12,16,18,19,21,22,24,25,27,28,30,31,34,56,60,63,64,72
%R0925	PLMS		Miscel-laneous signals
			FBIO 12,34,66,68,70
%R0926	PLMS		Reserv. for package in
			FBIO 76,77,78,86
%R0927	PLMS		FBIO (76),(86)
%R0928	PLMS		Reserv. for package out
			FBIO 81,82,83,(86)
%R0929	PLMS		FBIO (81),(86)
%R0934	PLMS		Time between packs
			FBIO 14
%R0935	PLMS		FBIO (14)
%R0936	PLMS		FBIO (14)
%R0937	PLMS		Delay DE Prod on
			FBIO 14
%R0938	PLMS		FBIO (14)
%R0939	PLMS		FBIO (14)
%R0940	PLMS		Delay DE Prod off
			FBIO 15
%R0941	PLMS		FBIO (15)
%R0942	PLMS		FBIO (15)
%R0943	PLMS		Jam in TER
			FBIO 44
%R0944	PLMS		FBIO (44)
%R0945	PLMS		FBIO (44)
%R0946	PLMS		Package count infeed
			FBIO 75
%R0947	PLMS		FBIO (75)
%R0948	PLMS		FBIO (75)
%R0949	PLMS		Package count outfeed
			FBIO 80
%R0950	PLMS		FBIO (80)
%R0951	PLMS		FBIO (80)
%R0963	PLMS		Break enable signal
			FBIO 6
%R0964	PLMS		FBIO (6)
%R0965	PLMS		FBIO (6)
%R1000	CUSTSET		Layout 1-4
			FBIO 5

```
REF.     BLOCK    NICKNAME  REF. DESCRIPTION / CROSS REFERENCES
-------  -------  --------  -----------------------------------
         COMMON             FBIO  36,37,38,39
%R1001   CUSTSET            Ref. pulse value
                            FBIO  (5)
         COMMON             FBIO  18,19,20,21,22,25,26,27
%R1002   CUSTSET            Low speed
                            FBIO  (5)
         LINE               FBIO  36,37,43,66,67,73,96,97,103,125,126,132,155,156,162,184,185,191
%R1003   CUSTSET            High speed
                            FBIO  (5)
         LINE               FBIO  41,42,71,72,101,102,130,131,160,161,189,190
%R1004   CUSTSET            Delay short stop
                            FBIO  (5)
         EXT                FBIO  5
%R1005   CUSTSET            Run time conv.
                            FBIO  (5)
         LINE               FBIO  17
%R1006   CUSTSET            FBIO  (5)
%R1007   CUSTSET            Low speed cond. DE
                            FBIO  7
         LINE               FBIO  24,53
%R1008   CUSTSET            Low speed cond. ref.
                            FBIO  (7)
         LINE               FBIO  22,51
%R1009   CUSTSET            Delay stop queue photoc.
                            FBIO  (7)
         LINE               FBIO  27,57
%R1010   CUSTSET            Delay restart motor
                            FBIO  (7)
         LINE               FBIO  29,59
%R1011   CUSTSET            FBIO  (7)
%R1012   CUSTSET            Delay stop queue photoc.
                            FBIO  (7)
         LINE               FBIO  87,116,146,175
%R1013   CUSTSET            FBIO  (7)
%R1015   LINE               FBIO  17
%R1100   ADVSET             Counter pulse
                            FBIO  5
         LINE               FBIO  19,48,80,109,139,168
%R1101   ADVSET             No sep. pulse
                            FBIO  (5)
         LINE               FBIO  20,49,81,110,140,169
%R1102   ADVSET             Forced low speed pulse
                            FBIO  (5)
         LINE               FBIO  21,50,82,111,141,170
%R1103   ADVSET             Low speed counter photoc.
                            FBIO  (5)
         LINE               FBIO  23,52,84,113,143,172
%R1104   ADVSET             Filter stop cond. counter
                            FBIO  (5)
         LINE               FBIO  26,56,86,115,145,174
%R1105   ADVSET             Filter stop cond. queue
                            FBIO  (5)
         LINE               FBIO  27,57,87,116,146,175
%R1106   ADVSET             Delay stop counter photoc.
                            FBIO  (5)
         LINE               FBIO  26,56,86,115,145,174
%R1107   ADVSET             Low speed queue photoc.
                            FBIO  7
         LINE               FBIO  83,112,142,171
%R1108   ADVSET             Delay restart motor
                            FBIO  (7)
         LINE               FBIO  89,118,148,177
%R1109   ADVSET             FBIO  (7)
%R1110   ADVSET             FBIO  (7)
%R1111   ADVSET             FBIO  (7)
%R1112   ADVSET             FBIO  (7)
%R1113   ADVSET             FBIO  (7)
%R1114   ADVSET             Speed 3
                            FBIO  9
         LINE               FBIO  37,67,97,126,156,185
%R1115   ADVSET             Speed 4
                            FBIO  (9)
         LINE               FBIO  38,68,98,127,157,186
%R1116   ADVSET             Speed 5
                            FBIO  (9)
         LINE               FBIO  39,69,99,128,158,187
%R1117   ADVSET             Speed 6
                            FBIO  (9)
         LINE               FBIO  40,70,100,129,159,188
%R1118   ADVSET             Speed 7
                            FBIO  (9)
         LINE               FBIO  41,71,101,130,160,189
%R1119   ADVSET             Speed 8
                            FBIO  (9)
         LINE               FBIO  42,72,102,131,161,190
%R1120   ADVSET             High limit speed- reg
                            FBIO  (9)
         LINE               FBIO  31,61,91,120,150,179
%R1201   COMMON             FBIO  18,19,20,21,22,25,26
```

SYSTEM REFERENCE (%S) GLOBAL CROSS REFERENCES

```
REF.     BLOCK    NICKNAME   REF. DESCRIPTION / CROSS REFERENCES
-------  -------  --------  -----------------------------------
%S0007   _MAIN    ALW_ON    -] [- 5,6,7,8,9,10,11,12,13,14
         CUSTSET  ALW_ON    -] [- 5,7
         ADVSET   ALW_ON    -] [- 5,7,9
         COMMON   ALW_ON    -] [- 18,26,36,37,38,39
         LINE     ALW_ON    -] [- 30,35,36,37,38,39,40,41,42,46,60,65,66,67,68,69,70,71,72,77,78,90,95,96,97,98,99,100,101,102,104,
                                   107,119,124,125,126,127,128,129,130,131,133,136,137,149,154,155,156,157,158,159,160,161,163,166,
                                   178,183,184,185,186,187,188,189,190,192,195,196,204
         PLMS     ALW_ON    -] [- 22
                            -]/[- 35
%S0008   LINE     ALW_OFF   -] [- 83,112,142,171,203
         PLMS     ALW_OFF   -] [- 21,47,49,51,63,66,68,70
```

IDENTIFIER NAME GLOBAL CROSS REFERENCES

```
IDENTIFIER   BLOCK    REF. DESCRIPTION / CROSS REFERENCES
----------   -------  -----------------------------------
CUSTSET      _MAIN    Custom setting
                      CALL  5
ADVSET       _MAIN    Advanc. setting
                      CALL  6
COMMON       _MAIN    Common
                      CALL  7
LINE         _MAIN    Conv. line
                      CALL  8
GREEN        _MAIN    Green lamp
                      CALL  9
EXT          _MAIN    External communication
                      CALL  10
ALARM        _MAIN    Alarms
                      CALL  11
CHAIN        _MAIN    Chain lubric.
                      CALL  12
BRAKE        _MAIN    Brakes
                      CALL  13
PLMS         _MAIN    PLMS
                      CALL  14
```

RACK 0

PS	1	2	3	4	5	6	7	8	9	10
PROGRAMMED CONFIGURATION										
PWR330	CPU363	MDL646	MDL646	MDL646	MDL646	MDL742	MDL742	MDL742	MDL742	
		I DC16	I DC16	I DC16	I DC16	Q DC16	Q DC16	Q DC16	Q DC16	
		RefAdr %I0001	RefAdr %I0017	RefAdr %I0033	RefAdr %I0049	RefAdr %Q0001	RefAdr %Q0017	RefAdr %Q0033	RefAdr %Q0049	

```
SERIES 90-30 MODULE IN RACK 0 SLOT  0
                    SOFTWARE  CONFIGURATION
SLOT   Catalog #: IC693PWR330          PWR SUP 120/240VAC,125VDC HCAP
  0
PWR330
```

```
SERIES 90-30 MODULE IN RACK 0 SLOT  1
                    SOFTWARE  CONFIGURATION
SLOT   Catalog #: IC693CPU363          SERIES 90-30 CPU, MODEL 363
  1
CPU363
       IOScan-Stop: NO        Baud Rate  : 19200
       Pwr Up Mode: LAST      Parity     : ODD
       Logic/Cfg  : RAM       Stop Bits  : 1
       Registers  : RAM       Modem TT   :   0       1/100 Second / Count
       Passwords  : ENABLED   Idle Time  :  10       Seconds
       R/S Switch : DISABLED
       Mem Protect: DISABLED
       Chksum Wrds:   8       Sweep Mode : NORMAL
       Tmr Faults : DISABLED  Sweep Tmr  : N/A       msec
```

```
SERIES 90-30 MODULE IN RACK 0 SLOT  1
                    SOFTWARE  CONFIGURATION
SLOT   Catalog #: IC693CPU363          SERIES 90-30 CPU, MODEL 363
  1
CPU363
       Port 1 Mode: SNP       Port 2 Mode: SNP
       SNP Mode   : SLAVE     SNP Mode   : SLAVE
       Baud Rate  : 19200     Baud Rate  : 19200
       Flow Contrl: NONE      Flow Contrl: NONE
       Parity     : ODD       Parity     : ODD
       Stop Bits  : 1         Stop Bits  : 1
       Timeout    : LONG      Timeout    : LONG
       TurnA Delay:   0       TurnA Delay:   0
       SNP ID     :           SNP ID     :
```

```
SERIES 90-30 MODULE IN RACK 0 SLOT  2
                    SOFTWARE  CONFIGURATION
SLOT   Catalog #: IC693MDL646          INPUT 24 VDC 16PT POS/NEG FAST
  2    Ref Addr :   %I0001             Size  : 16
MDL646
I DC16

RefAdr
%I0001
```

SERIES 90-30 MODULE IN RACK 0 SLOT 3

SOFTWARE CONFIGURATION

SLOT 3	Catalog #: IC693MDL646	INPUT 24 VDC 16PT POS/NEG FAST
	Ref Addr : %I0017	Size : 16
MDL646		
I DC16		
RefAdr %I0017		

SERIES 90-30 MODULE IN RACK 0 SLOT 4

SOFTWARE CONFIGURATION

SLOT 4	Catalog #: IC693MDL646	INPUT 24 VDC 16PT POS/NEG FAST
	Ref Addr : %I0033	Size : 16
MDL646		
I DC16		
RefAdr %I0033		

SERIES 90-30 MODULE IN RACK 0 SLOT 5

SOFTWARE CONFIGURATION

SLOT 5	Catalog #: IC693MDL646	INPUT 24 VDC 16PT POS/NEG FAST
	Ref Addr : %I0049	Size : 16
MDL646		
I DC16		
RefAdr %I0049		

SERIES 90-30 MODULE IN RACK 0 SLOT 6

SOFTWARE CONFIGURATION

SLOT 6	Catalog #: IC693MDL742	OUTPUT 12/24 VDC 1A 16PT POS
	Ref Addr : %Q0001	Size : 16
MDL742		
Q DC16		
RefAdr %Q0001		

SERIES 90-30 MODULE IN RACK 0 SLOT 7

SOFTWARE CONFIGURATION

SLOT		
7	Catalog #: IC693MDL742	OUTPUT 12/24 VDC 1A 16PT POS
	Ref Addr : %Q0017	Size : 16
MDL742		
Q DC16		
RefAdr %Q0017		

SERIES 90-30 MODULE IN RACK 0 SLOT 8

SOFTWARE CONFIGURATION

SLOT		
8	Catalog #: IC693MDL742	OUTPUT 12/24 VDC 1A 16PT POS
	Ref Addr : %Q0033	Size : 16
MDL742		
Q DC16		
RefAdr %Q0033		

SERIES 90-30 MODULE IN RACK 0 SLOT 9

SOFTWARE CONFIGURATION

SLOT		
9	Catalog #: IC693MDL742	OUTPUT 12/24 VDC 1A 16PT POS
	Ref Addr : %Q0049	Size : 16
MDL742		
Q DC16		
RefAdr %Q0049		

Down time signals

Register: 922

	Description	Tag Nbr. **)	Stop *)	PLC Bit Hex	PLC Bit Dec	Stop code PLMS	Memory Bit	Alarms Nicknames
1	Emergency Stop	00	DT	1	1	8010		
2		01	DT	2	2	8011		
3		02	DT	4	4	8012		
4	Motor Protection	03	DT	8	8	8013		
5	Conveyer Switch	04	DT	10	16	8014		
6		05	DT	20	32	8015		
7	Conveyers Jam	06	DT	40	64	8016		
8	Equipment stop 1	07	DT	80	128	8017		
9	Equipment stop 2	08	DT	100	256	8018		
10	Equipment stop 3	09	DT	200	512	8019		
11		10	DT	400	1024	8020		
12		11	DT	800	2048	8021		
13		12	DT	1000	4096	8022		
14		13	DT	2000	8192	8023		
15		14	DT	4000	16384	8024		
16		15	DT	8000	32768	8025		

Down time signals

Register: 923

	Description	Tag Nbr. **)	Stop *)	PLC Bit Hex	PLC Bit Dec	Stop code PLMS	Memory Bit	Alarms Nicknames
1		16	DT	1	1	8026		
2		17	DT	2	2	8027		
3		18	DT	4	4	8028		
4		19	DT	8	8	8029		
5		20	DT	10	16	8030		
6		21	DT	20	32	8031		
7		22	DT	40	64	8032		
8		23	DT	80	128	8033		
9		24	DT	100	256	8034		
10		25	DT	200	512	8035		
11		26	DT	400	1024	8036		
12		27	DT	800	2048	8037		
13		28	DT	1000	4096	8038		
14		29	DT	2000	8192	8039		
15		30	DT	4000	16384	8040		
16	NOT USED	31	--	8000	32768	8041		

* IS - Information signal
DT - Down time
IT - Idle time
AT-Ancillary time
**) Tag name for register 922, 923 ("Intouch"):
DET8000_EVENTS1.YY (YY=Tag Nbr.)

Note:
To easily add events on the field or for test purpose, pre-specify general Down time events to be logged :
"Equipment Stop 1", "Equipment Stop 2", "Equipment Stop 3"

Miscellaneous signals

Register: 924

	Description	Tag Nbr. **)	Stop *)	PLC Bit Hex	PLC Bit Dec	Stop code PLMS	Memory Bit	Alarms Nicknames
1	DE External enable signal	00	IS	1	1	8050		
2	DE produktion time	01	IS	2	2	8051		
3	Manual drive select	02	IS	4	4	8052		
4	Conveyer lubrication fault	03	IS	8	8	8053		
5	Electrical Alarm	04	IS	10	16	8054		Surge protection
6	Information 2	05	IS	20	32	8055		
7	Information 3	06	IS	40	64	8056		
8	Ladder step OFF, Step <= 0	07	IS	80	128	8057		
9	Ladder step PREPARATION, Step 1,2	08	IS	100	256	8058		
10	Ladder step PRODUCTION, Step 3	09	IS	200	512	8059		
11		10	IT	400	1024	8070		
12	Conveyor full	11	IT	800	2048	8071		
13	Queue Outfeed	12	IT	1000	4096	8072		
14	Manual step down	13	IT	2000	8192	8073		
15	DE not Ready	14	IT	4000	16384	8074		
16	NOT USED	15	--	8000	32768	8075		

Note:
To easily add events on the field or for test purpose, pre-specify general Information signals to be logged (internal Tetra Pak use only) :
"Information 1", "Information 2", "Information 3"

Miscellaneous signals

Register: 925

	Description	Tag Nbr. **)	Stop *)	PLC Bit Hex	PLC Bit Dec	Stop code PLMS	Memory Bit	Alarms Nicknames
1	Idle Stop 1	16	IT	1	1	8076		
2	Idle Stop 2	17	IT	2	2	8077		
3	Idle Stop 3	18	IT	4	4	8078		
4		19	IT	8	8	8079		
5		20	IT	10	16	8080		
6		21	IT	20	32	8081		
7		22	IT	40	64	8082		
8		23	IT	80	128	8083		
9		24	IT	100	256	8084		
10		25	AT	200	512	8085		
11		26	AT	400	1024	8086		
12		27	AT	800	2048	8087		
13		28	AT	1000	4096	8088		
14		29	AT	2000	8192	8089		
15		30	AT	4000	16384	8090		
16	NOT USED	31	--	8000	32768	8091		

* IS - Information signal
DT - Down time
IT - Idle time
AT-Ancillary time
**) Tag name for register 924, 925 ("Intouch"):
DET8000_EVENTS2.YY (YY=Tag Nbr.)

Note:
To easily add events on the field or for test purpose, pre-specify general Idle time events to be logged :
"Idle Stop 1", "Idle Stop 2", "Idle Stop 3"

Tetra Pak