EM binder labels. 40 mm Full width *Note! This page is generated **automatically**. using the **variable definitions** made in the **front page** file!!*

Tetra Cap Applicator 47
662251-0100

Issue 2003-06 Doc No. EM-2531133-0102

Tetra Cap Applicator 47
662251-0100

Issue 2003-06 Doc No. EM-2531133-0102

Tetra Cap Applicator 47
662251-0100

Issue 2003-06 Doc No. EM-2531133-0102

Tetra Cap Applicator 47
662251-0100

Issue 2003-06 Doc No. EM-2531133-0102

Tetra Cap Applicator 47
662251-0100

Issue 2003-06 Doc No. EM-2531133-0102

Tetra Cap Applicator 47
662251-0100

Issue 2003-06 Doc No. EM-2531133-0102

Tetra Cap Applicator 47
662251-0100

Issue 2003-06 Doc No. EM-2531133-0102

Tetra Cap Applicator 47
662251-0100

Issue 2003-06 Doc No. EM-2531133-0102

Tetra Cap Applicator 47
662251-0100

Issue 2003-06 Doc No. EM-2531133-0102

Tetra Cap Applicator 47
662251-0100

Issue 2003-06 Doc No. EM-2531133-0102

Tetra Cap Applicator 47
662251-0100

Issue 2003-06 Doc No. EM-2531133-0102

EM binder labels. 30mm Halfwidth *Note! This page is generated* ***automatically****. using the* ***variable definitions*** *made in the* ***front page*** *file!!*

Tetra Cap Applicator 47
662251-0100

Issue 2003-06 Doc No. EM-2531133-0102

Tetra Cap Applicator 47
662251-0100

Issue 2003-06 Doc No. EM-2531133-0102

Tetra Cap Applicator 47
662251-0100

Issue 2003-06 Doc No. EM-2531133-0102

Tetra Cap Applicator 47
662251-0100

Issue 2003-06 Doc No. EM-2531133-0102

Tetra Cap Applicator 47
662251-0100

Issue 2003-06 Doc No. EM-2531133-0102

Tetra Cap Applicator 47
662251-0100

Issue 2003-06 Doc No. EM-2531133-0102

Tetra Cap Applicator 47
662251-0100

Issue 2003-06 Doc No. EM-2531133-0102

Tetra Cap Applicator 47
662251-0100

Issue 2003-06 Doc No. EM-2531133-0102

Tetra Cap Applicator 47
662251-0100

Issue 2003-06 Doc No. EM-2531133-0102

Tetra Cap Applicator 47
662251-0100

Issue 2003-06 Doc No. EM-2531133-0102

Tetra Cap Applicator 47
662251-0100

Issue 2003-06 Doc No. EM-2531133-0102

Tetra Cap Applicator 47
662251-0100

Issue 2003-06 Doc No. EM-2531133-0102

Tetra Cap Applicator 47
662251-0100

Issue 2003-06 Doc No. EM-2531133-0102

Tetra Cap Applicator 47
662251-0100

Issue 2003-06 Doc No. EM-2531133-0102

Tetra Cap Applicator 47
662251-0100

Issue 2003-06 Doc No. EM-2531133-0102

Tetra Cap Applicator 47
662251-0100

Issue 2003-06 Doc No. EM-2531133-0102

EM

Electrical Manual

Tetra Cap Applicator 47

662251-0100

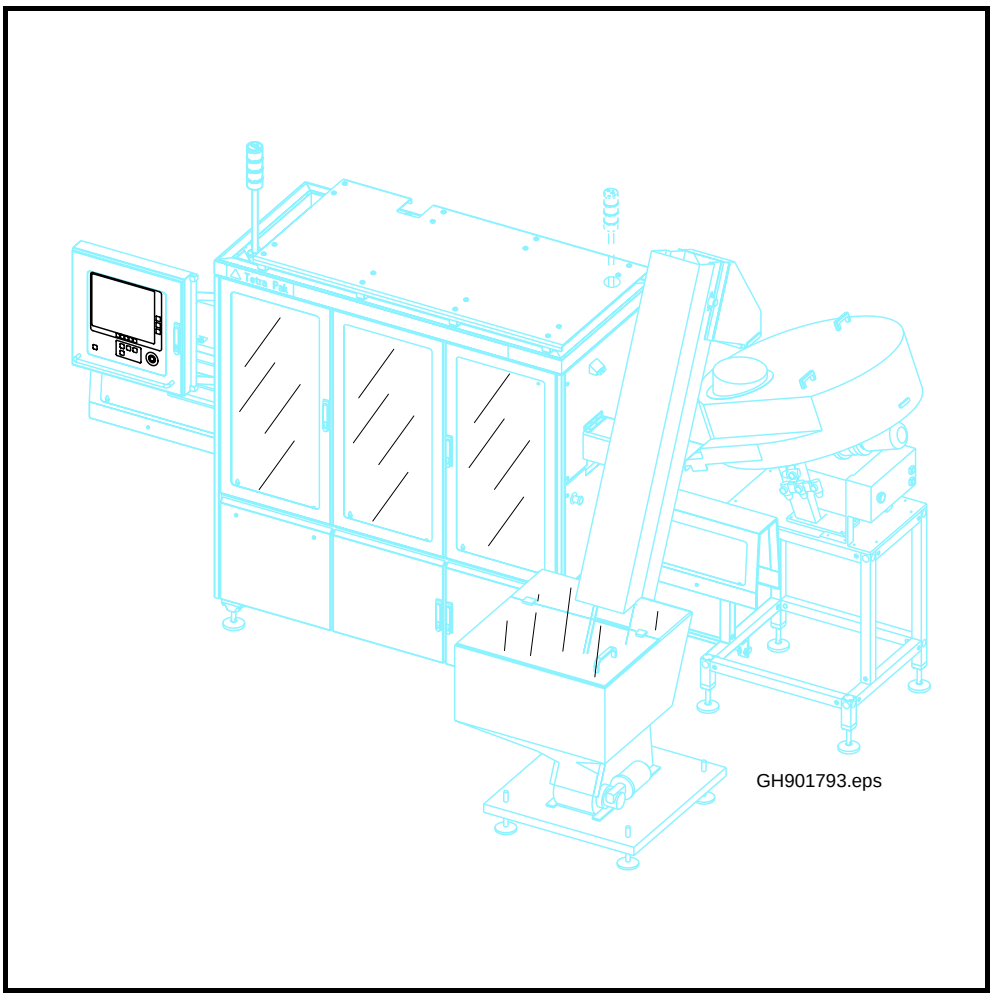

EM1.1125311330102.fm

Tetra Pak

Doc No. EM-2531133-0102

This page intentionally left blank

This document is valid for:

Series No/ Machine No Sign.

EM

Electrical Manual

Tetra Cap Applicator 47
662251-0100

EM1.1125311330102.fm

Introduction	**1**
Safety Precautions	**2**
Electrical systems description	**3**
Component location	**4**
Document list	**5**
Position summary	**6**
Circuit diagrams	**7**
Line summary	**8**
Terminal summary	**9**
Terminal strip overview	**10**
Cable connection list	**11**
Mains connection	**12**
Program documents	**13**
Other information	**14**

Doc No. EM-2531133-0102

Issue 2003-06

Tetra Pak

Tetra Pak Carton Ambient AB

This page intentionally left blank

1 Introduction

WARNING!

Risk of serious personal injury!
To ensure maximum safety, always read the Chapter 2 Safety precautions before operating and servicing the machine or equipment.

EM1.1TH900597en.fm

Table of contents

Document information 1-3
About this Electrical Manual (EM) 1-3
Delivered documentation 1-3
Design modifications 1-3
Document producer 1-3
Additional copies 1-4
Number of pages 1-4
Copyright © 2003. 1-4

Machine introduction 1-4
Intended use of this Tetra Pak equipment 1-4
Service 1-4
Manufacturer 1-4

Machine identification 1-5

How to use the EM 1-6

Numbering system for components 1-8

Optional equipment 1-10

How to trace a cable. 1-11

How to trace a component. 1-12

Supply voltage/Line connection order 1-17

How to trace a line 1-18

How to trace a terminal 1-19

Machine orientation 1-22
Definition of direction 1-22
Main section location 1-23

Abbreviations used in this manual 1-24
Terminology 1-24

EM1.1TH900597en.fm

Document information

About this Electrical Manual (EM)

The purpose of this Electrical Manual (EM) is to provide service technicians and electricians with the information on the electrical equipment that they need to be able to perform service and maintenance.

Delivered documentation

The technical documentation delivered with this machine is stated in the Machine Specification which is to be found as a plastic laminated copy in the electrical cabinet.

Note! If any document is missing, it must be reported in the document **Start Up Machine Quality Report**. For more information, read the Installation Manual.

It is important that you keep these documents for the life of the equipment, and pass the documents on to any subsequent holder or user of the equipment.

Design modifications

The directives in this document are in accordance with the design and construction of the machine at the time it was released by a Tetra Pak machine production facility.

Document producer

This document has been produced by:

Tetra Pak Carton Ambient AB
Ruben Rausings gata
SE- 221 86 Lund
Sweden

(Cont'd)

EM1.1TH900597en.fm

(Cont'd)

Additional copies

Additional copies can be ordered from nearest Tetra Pak office.

When ordering technical publications, always quote the **document number** printed on the front cover of the document concerned.

Number of pages

All chapters have a front page to indicate the chapters beginning, followed by a table of contents (always the second page). To make sure that you have received a complete document, please check that the contents matches the table of contents for each chapter.

Copyright © 2003

Tetra Pak Carton Ambient AB

All rights reserved. No part of this document may be reproduced or copied in any form or by any means without the written permission of Tetra Pak Carton Ambient AB.

Machine introduction

Intended use of this Tetra Pak equipment

The Tetra Cap Applicator 47 is used for the purpose of applying SlimCap caps onto Tetra Brik Aseptic 1000 ml Slim packages. Packages that are to be provided with caps must have opening tabs. The opening tabs are applied by a PullTab unit, incorporated in the filling machine.

Service

In the event of problems when operating the machine, contact the nearest Tetra Pak station.

Manufacturer

This Tetra Pak equipment was produced by:

Tetra Pak Carton Ambient AB
Ruben Rausings gata
SE- 221 86 Lund
Sweden

EM1.1TH900597en.fm

Machine identification

The machine sign below is attached to the machine frame. It carries data needed when contacting Tetra Pak concerning this particular machine.

The machine sign is marked with a CE symbol. It means that this machine complies with the **essential health and safety requirements of the European Economic Area (EEA)**.

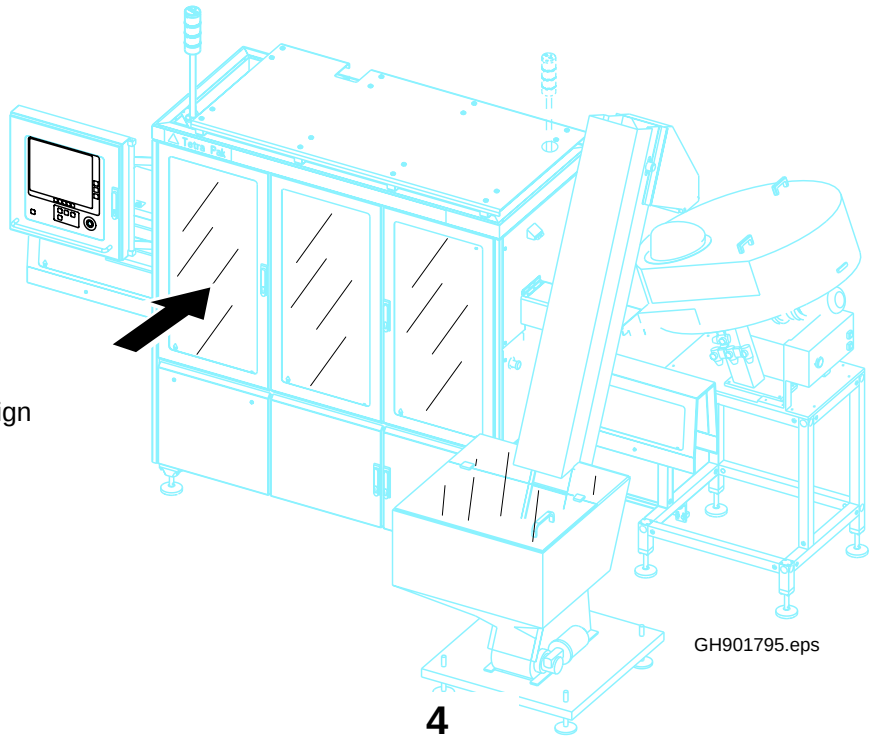

Location of machine sign

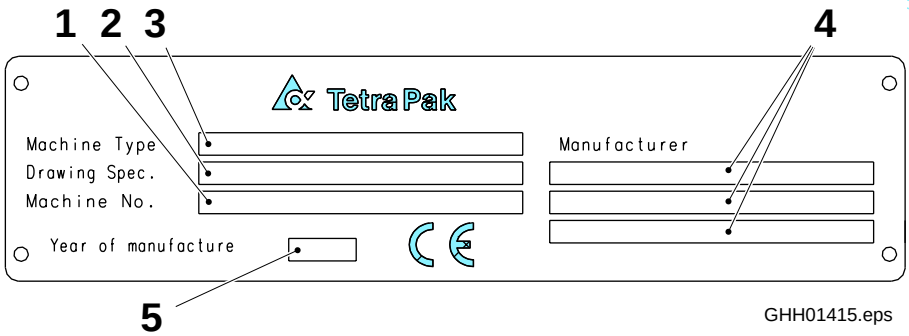

Example of machine sign

1 Machine number
2 Drawing specification
3 Machine type
4 Manufacturer
5 Year of manufacture

EM1.1TH900597en.fm

How to use the EM

General

How to use the EM is an explanation of how to find your way through the chapters in the EM.

The chapters are divided as follows:

	1Introduction
	2 Safety precautions
	3 Electrical systems description
	4 Component location
2543127-**0001**	5 Documents list
2543127-**0002**	6 Position summary
2543127-**0003**	7 Circuit diagram
2543127-**0004**	8 Line summary
2543127-**0005**	9 Terminal summary
2543127-**0006**	10 Terminal strip overview
2543127-**0007**	11 Cable connection list
2543127-**0008**	12 Mains connections
48463-0001 48463-0002	13 Program documents
	14 Other information

The first page in each chapter is always a Table of Contents, listing all drawings included in the chapter.

The documents in the above-mentioned chapters are identified by:

- a document type number (1)
- a version number (2)
- a page number (3)
- a next page number (4).

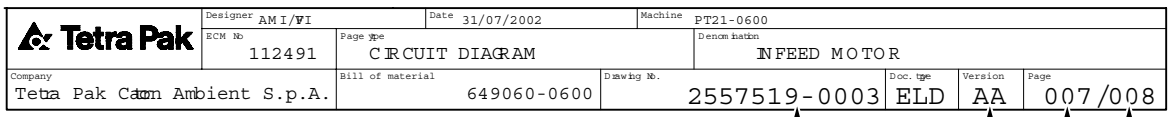

1 Document type number
2 Version number
3 Page number
4 Next page number

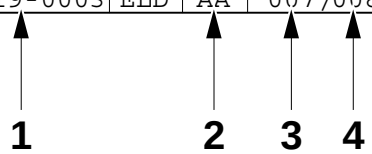

The page number is the consecutive numbering of the pages which belong to the main number and is used as a reference in the diagrams.

(Cont'd)

(Cont'd)

In the **Circuit diagram** the first pages are reserved for distribution terminals and last pages are reserved for pre-connected cables (cables connected to spare terminals and reserved for future use).

The **Mains connection** diagram shows how the machine should be connected to the local supply, the dimensions of the connection cable and the connection of the matching transformer (when used).

Caution! Always follow local regulations regarding the dimensions of the connection cable.

The Program documents consist of the PLC listings for this machine.

Enclosed are some examples of how to use the EM.

EM1.1TH900597en.fm

Numbering system for components

The position number is divided into three parts:

- prefix (1)
- function designation (2)
- running number (3).

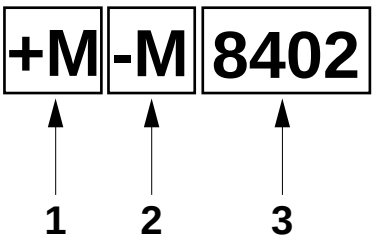

1 Prefix
2 Function designation
3 Running number

Prefix (1)

This prefix shows the location of the component.

- the prefix +M indicates that the component is fitted on the machine, outside the electrical cabinet
- the prefix +C indicates that the component is fitted on the electrical cabinet
- the prefix + P indicates that the component is fitted on the panel

Note! The location +C is considered as default and it's omitted on all the **Circuit diagram** pages.

(Cont'd)

EM1.1TH900597en.fm

(Cont'd)

Function designation (2)

The function designation is indicated in accordance with international standards, see table below.

Designation	Signification in electrical diagram
A	Assemblies, Subassemblies
B	Transducers
C	Capacitors
D	Binary element, Delay devices, Storage devices
E	Miscellaneous
F	Protective devices
G	Generators, Power supplies
H	Signalling devices
K	Relays, Contactors
L	Inductors, Reactors
M	Motors
N	Analogue elements
P	Measuring equipment, Testing equipment
Q	Switching devices for power circuits
R	Resistors
S	Switching devices for control circuits selectors
T	Transformers
U	Modulators, Changers
V	Tubes, Semiconductors
W	Transmission paths, Waveguide aerials
X	Terminals, Plugs, Sockets
Y	Electrically operated mechanical devices
Z	Terminations, Hybrids, Filters, Equalizers, Limiters

Running number (3)

The electrical components are numbered in a consecutive non-logical order.

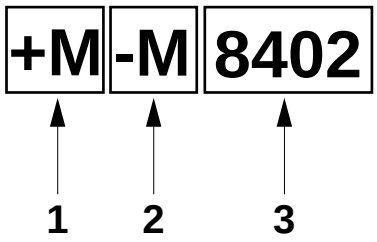

1 Prefix
2 Function designation
3 Running number

EM1.1TH900597en.fm

How to trace a cable

Example: How to trace cable No. +M-W8202

a) Go to the **Cable Connection list**

b) On the right side of the table, find the circuit diagram reference page where the cable +M-W8202 is located (page 005, column 5)

Note! The cables are listed in alphanumerical order.

c) Go to page 005 in the **Circuit diagram**

d) Find the cable +M-W8202

Note! In the cable connection list the spare cores are shown.

Cable Connection List of 2557519-0003

Cable	Core	From	To	Page.Col.	Option
+M-W8201	4	+F-X106:6	+C-X8201:6	005.5	
+M-W8201	YG	+F-X106:	+C-X8201:	005.5	
+M-W8202	1	+F-X206:1	+C-X8202:1	005.5	
+M-W8202	2	+F-X206:2	+C-X8202:2	005.5	
	3				
	4				
+M-W8202	5	+F-X206:5	+C-X8202:5	005.5	
+M-W8202	6	+F-X206:6	+C-X8202:6	005.5	
+M-W8202	7	+F-X206:7	+C-X8202:7	005.5	
+M-W8202	8	+F-X206:8	+C-X8202:8	005.5	
+M-W8202	9	+F-X206:9	+C-X8202:9	005.5	
+M-W8202	10	+F-X206:10	+C-X8202:10	005.5	
+M-W8202	11	+F-X206:11	+C-X8202:11	005.5	
+M-W8202	YG	+F-X206:	+C-X8202:	005.5	
+M-W8203	WH	+F-X206:23	+C-X8202:23	005.5	

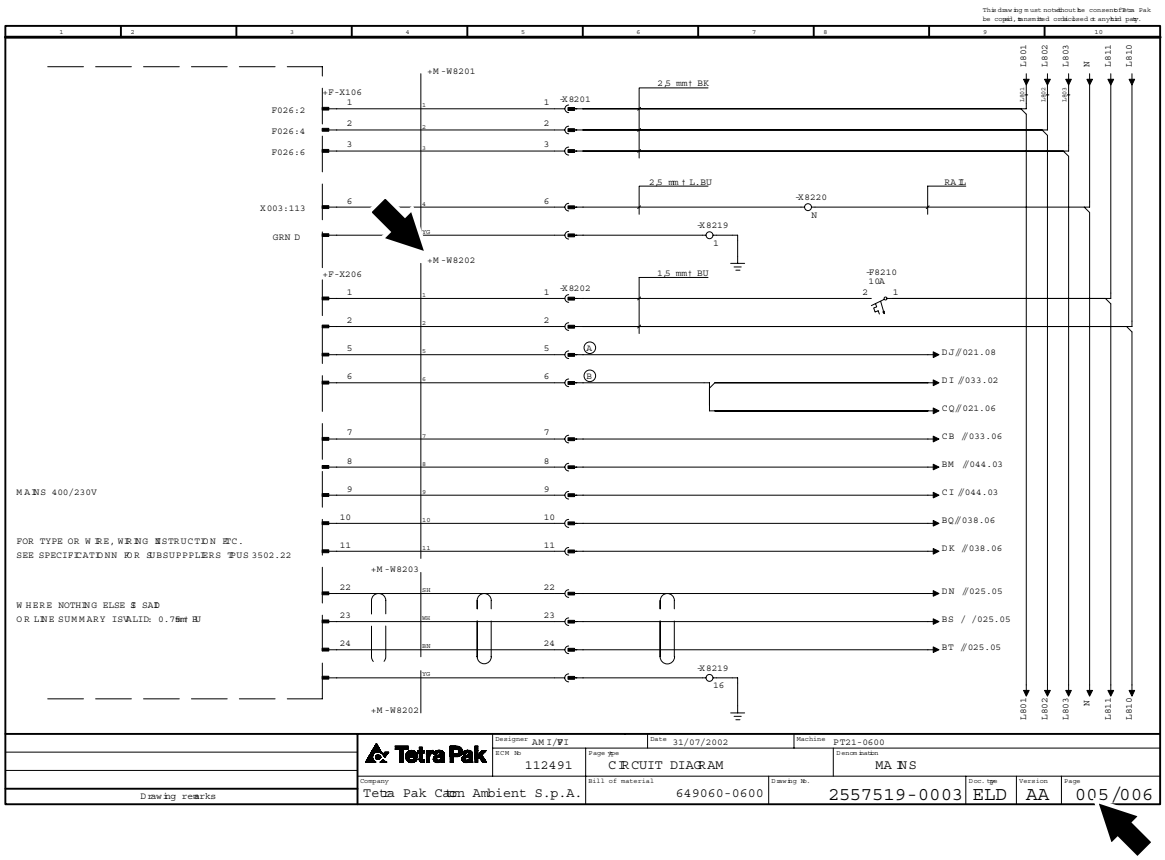

EM1.1TH900597en.fm

How to trace a component

Example 1: How to trace sensor +M-B8405

a) Go to the **Position summary**

b) On the right side of the table, find the circuit diagram reference page where the component +M-B8405 is located (page 035, column 4)

c) Go to page 035 in the **Circuit diagram**

d) Find the component +M-B8405

e) Note the connections +M-X8402:1,:2,:3

f) Note the cable +M-W8423

Position summary of 2557519-0003

Component	Page .Col	Opt.	Component	Page .Col	Opt.
+C-A8201	006.7		+M-B8405	035.4	
+C-A8202	021.7		+M-B8408	037.5	
+C-A8205	015.4		+M-B8409	028.4	
+C-A8210	016.3		+M-B8411	028.4	
+C-A8211	017.4		+M-B8413	037.5	
+C-A8212	017.4		+M-B8414	028.4	
+C-A8216	007.5		+M-B8421	027.4	
+C-A8233	008.7		+M-B8422	028.4	
+C-A8250	018.7		+M-B8423	027.4	
+C-A8251	017.8		+M-B8424	027.4	
+C-A8252	022.6		+M-B8426	034.3	
+C-A8301	028.7		+M-B8427	041.3	

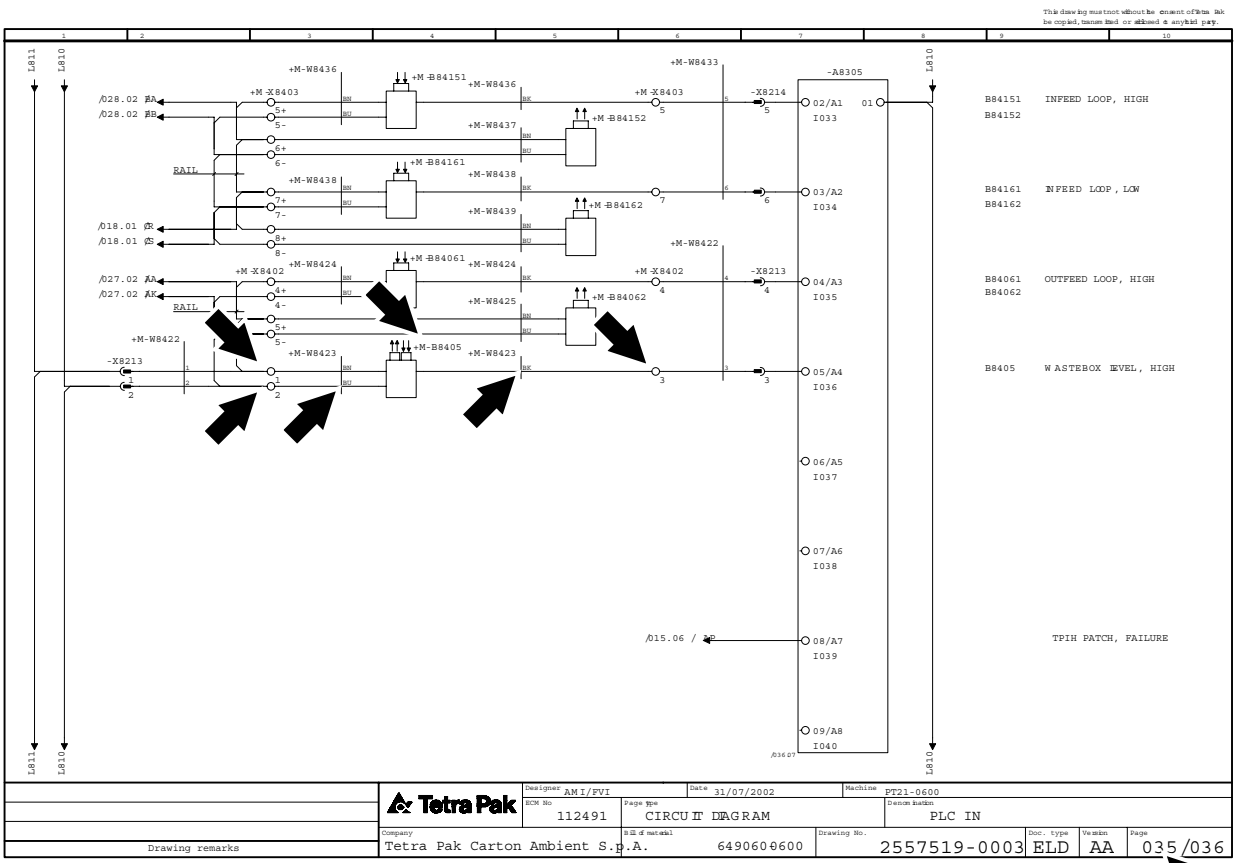

(Cont'd)

EM1.1TH900597en.fm

(Cont'd)

g) Go to the **Terminal strip overview**

h) Find the connections +M-X8402:1,:2,:3 (on the right side of the table find the circuit diagram reference page where the connections are located)

Note! The **Terminal strip overview** shows how the sensor is connected (in this case via a connection box).

Terminal strip of 2557519-0003

+M-X8402

From	Cable	Int. Jump.	Terminal	Ext. Jump.	Cable	To	Page.Col.	Option	Function text
+C-X8213:1	+M-W8422:1		1		+M-W8423:BN	+M-B8405:	035.3		WASTEBOX LEVEL, HIGH
+C-X8213:2	+M-W8422:2		2		+M-W8423:BU	+M-B8405:	035.3		WASTEBOX LEVEL, HIGH
+C-X8213:3	+M-W8422:3		3		+M-W8423:BK	+M-B8405:	035.6		WASTEBOX LEVEL, HIGH
+C-X8213:4	+M-W8422:4		4		+M-W8424:BK	+M-B84061:	035.6		OUTFEED LOOP, HIGH
			4+		+M-W8424:BN	+M-B84061:	035.3		OUTFEED LOOP, HIGH
			4-		+M-W8424:BU	+M-B84061:	035.3		OUTFEED LOOP, HIGH
			5						
			5+		+M-W8425:BN	+M-B84062:	035.3		OUTFEED LOOP, HIGH
			5-		+M-W8425:BU	+M-B84062:	035.3		OUTFEED LOOP, HIGH
+C-X8213:5	+M-W8422:5		6		+M-W8426:BK	+M-B84071:	027.5		OUTFEED LOOP, LOW
			6+		+M-W8426:BN	+M-B84071:	027.2		OUTFEED LOOP, LOW
			6-		+M-W8426:BU	+M-B84071:	027.2		OUTFEED LOOP, LOW
			7						
			7+		+M-W8427:BN	+M-B84072:	027.2		OUTFEED LOOP, LOW
			7-		+M-W8427:BU	+M-B84072:	027.2		OUTFEED LOOP, LOW
+C-X8213:6	+M-W8422:6		8				040.6		
			8+				040.4		
			8-				040.4		
+C-X8213:7	+M-W8422:7		9				040.6		
			9+				040.4		
			9-				040.4		
+C-X8213:8	+M-W8422:8		10				040.6		
			10+				040.4		
			10-				040.4		
+C-X8213:9	+M-W8422:9		11		+M-W8431:WH	+M-B8411:	028.6		BLACK TAPE, DETECTED
			11+		+M-W8431:RD	+M-B8411:	028.3		BLACK TAPE, DETECTED
			11-		+M-W8431:BK	+M-B8411:	028.3		BLACK TAPE, DETECTED
+C-X8213:10	+M-W8422:10		12				040.6		
			12+				040.4		
			12-				040.4		

Note! When a cable is supplied with the component (i.e. sensors and photocells) the pin configuration is removed from the symbol in the **Circuit diagram**. The connection information is kept from the cable cores.

(Cont'd)

(Cont'd)

i) The location +M indicates that the component is fitted on the machine

j) Go to the **Component location** chapter to find the position of the component B8405

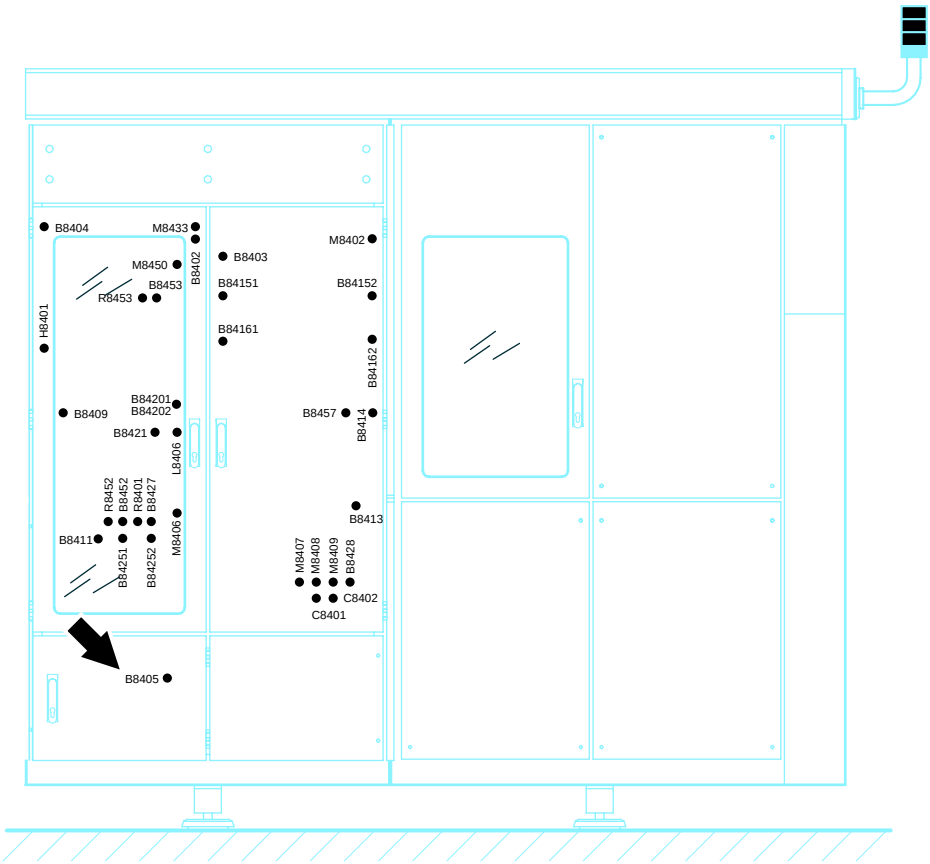

EM1.1TH900597en.fm

(Cont'd)

(Cont'd)

Example 2: How to trace contactor +C-K8201

a) Go to the **Position summary**

b) On the right side of the table, find the circuit diagram reference page where the component +C-K8201 is located (page 043, column 4)

c) Go to page 043 in the **Circuit diagram**

d) Find the component +C-K8201

e) Note the contact image on the right side and find the relative contacts page references

+C-A8311	047.1	+M-B8457	018.3	+C-F8252	012.6	+C-P8201	045.4
+C-A8313	051.1	+M-B84061	035.4	+C-F8253	012.9	+C-Q8201	006.2
+C-B8201	041.3	+M-B84062	035.5	+C-G8301	010.1	+C-R8301	025.3
+C-B8202	033.4	+M-B84071	027.4	+C-G8302	010.4	+M-R8401	012.3
+M-B8401	021.5	+M-B84072	027.4	+C-G8303	010.7	+M-R8452	012.6
+M-B8402	021.2	+M-B84151	035.4	+M-H8401	011.1	+M-R8453	012.9
+M-B8403	021.2	+M-B84152	035.5	+C-HS820	045.5	+C-S8201	038.4
+M-B8404	033.4	+M-B84161	035.4	+C-K8201	043.4	+C-S8202	021.5

Tetra Pak | Designer AMI/FVI | Date 31/07/2002 | Machine PT21-0600
ECM No 112491 | Page type POSITION SUMMARY | Version POSITION SUMMARY
Company Tetra Pak Carton Ambient S.p.A. | BM of material 6490600600 | Drawing No. 2557519-0002 | Doc. type ELD | Version AA | Page 001/002
Drawing remarks

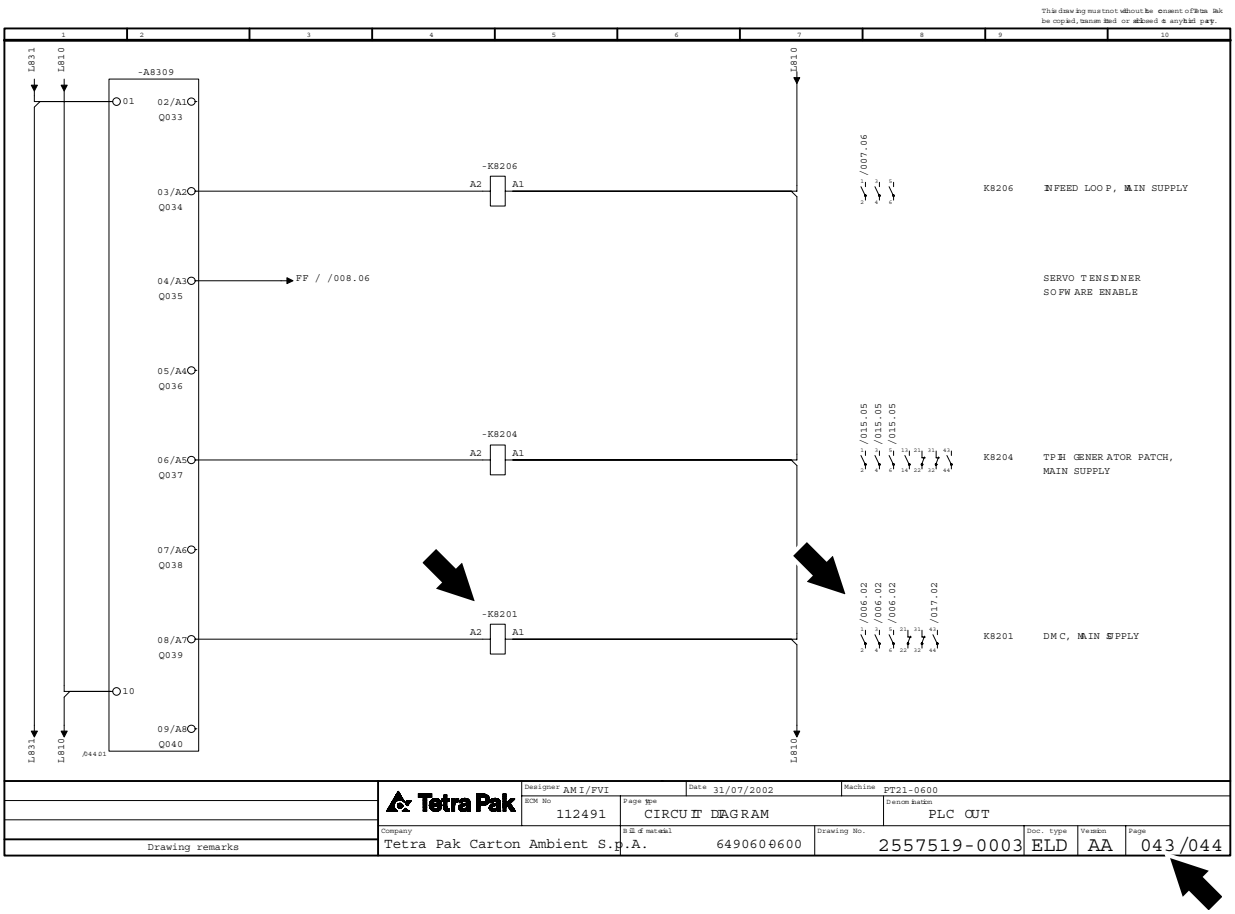

(Cont'd)

EM1.1TH900597en.fm

(Cont'd)

f) Go to page 006, column 2 in the **Circuit diagram**

g) Find the contacts +C-K8201

Note! In case of master and slave component (i.e. coils and contacts), only the master is reported in the **Position summary**. The slave shows the page and the column reference of the master.

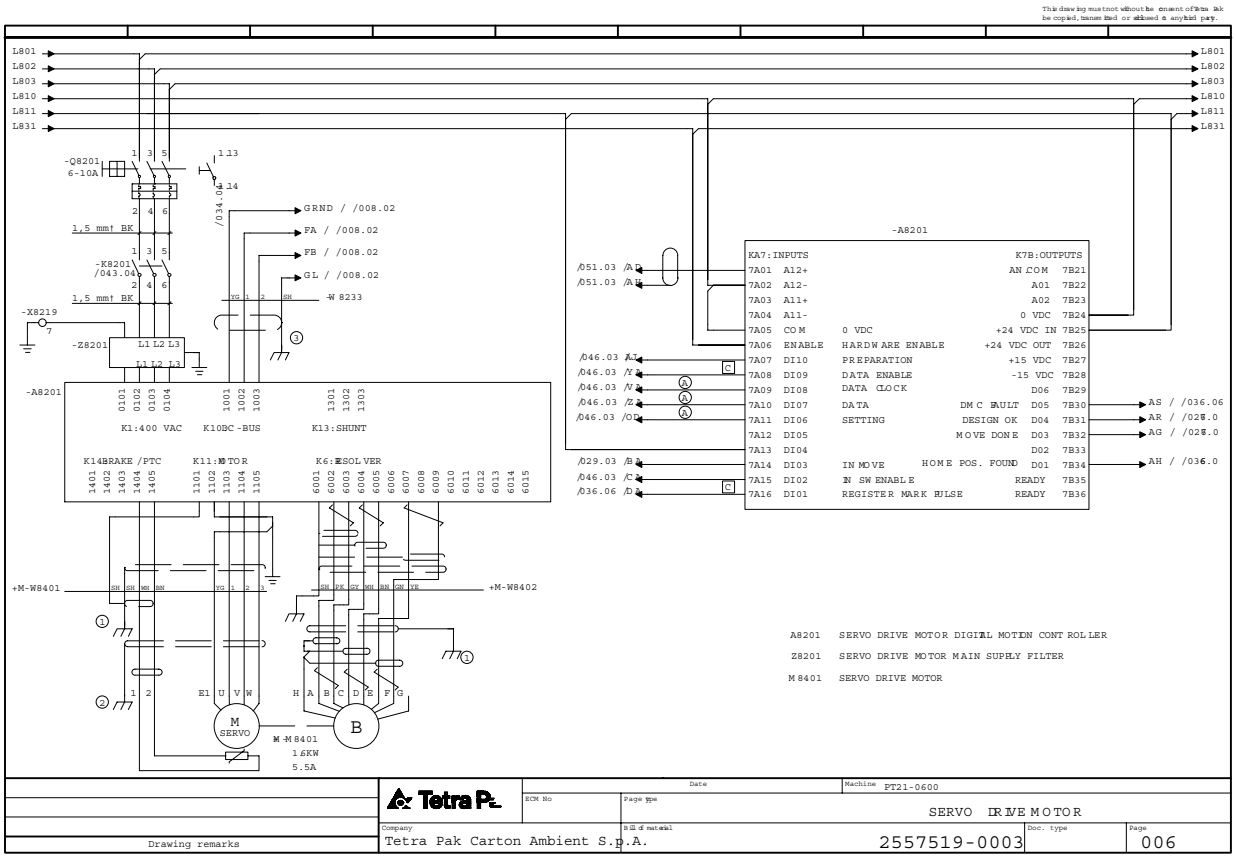

EM1.1TH900597en.fm

How to trace a terminal

Example 1: Terminal in the electrical cabinet +C-X8213:3

a) Go to the **Cabinet terminal summary**

b) Find the terminal +C-X8213:3

c) On the right side of the table, find the circuit diagram reference page where the terminal +C-X8213:3 is located (page 035, column 7)

d) Go to the **Circuit diagram**

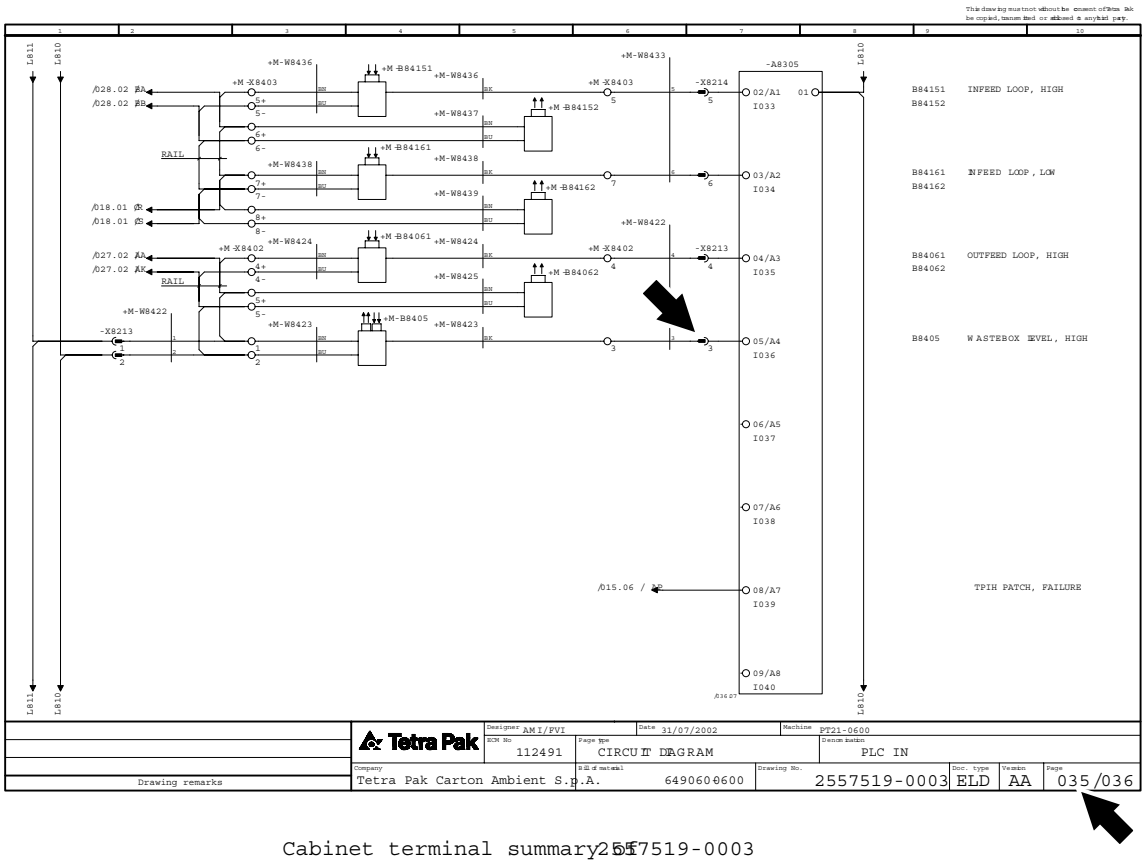

Cabinet terminal summary 2557519-0003

Terminal	Page .Col Opt.	Terminal	Page .Col Opt.
+C-X8212:15	032.4	+C-X8214:7	018.5
+C-X8212:16		+C-X8214:8	040.7
+C-X8212:17	031.3	+C-X8214:9	040.7
+C-X8212:18	031.3	+C-X8214:10	040.7
+C-X8212:19	032.8	+C-X8214:	040.7
+C-X8212:20	039.7	+C-X8215:1	011.7
+C-X8212:21	031.7	+C-X8215:2	011.8
+C-X8212:22	031.7	+C-X8215:3	011.4
+C-X8212:23	034.2	+C-X8215:4	011.4
+C-X8212:24	034.5	+C-X8215:5	011.10
+C-X8212:	031.7	+C-X8215:6	011.9
+C-X8213:1	035.1	+C-X8215:	011.9
+C-X8213:2	035.[illegible]	+C-X8216:1	027.2
+C-X8213:3	035.7	+C-X8216:2	027.2
+C-X8213:4	035.7	+C-X8216:3	027.6
+C-X8213:5	027.6	+C-X8217:+	041.4
+C-X8213:6	040.7	+C-X8217:-	041.4
+C-X8213:7	040.7	+C-X8219:1	005.7
+C-X8213:8	040.7	+C-X8219:2	053.4
+C-X8213:9	028.6	+C-X8219:3	053.4
+C-X8213:10	040.7	+C-X8219:4	

(Cont'd)

(Cont'd)

Example 2: Terminal outside the electrical cabinet +M-X8402:1,:2,:3

a) Go to the **Terminal strip overview**

b) Find the terminal strip page where +M-X8402 is located

c) On the right side of the table, find the circuit diagram reference page where the terminals +M-X8402:1,:2,:3 are located (page 035, column 3)

d) Go to the **Circuit diagram**

e) Note the component connected +M-B8405

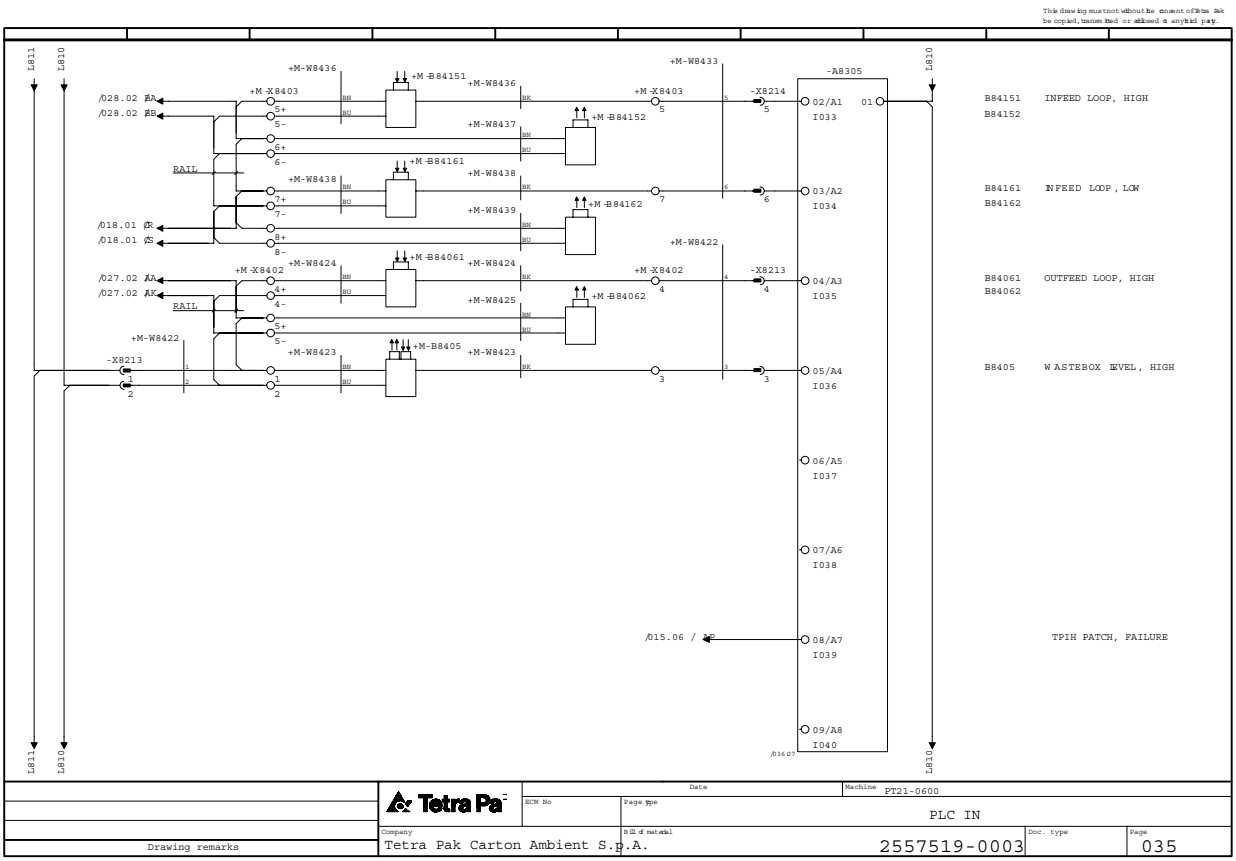

(Cont'd)

EM1.1TH900597en.fm

(Cont'd)

f) The location +M indicates that the component is fitted on the machine.

g) Go to the **Component location** chapter to find the position of the component B8405.

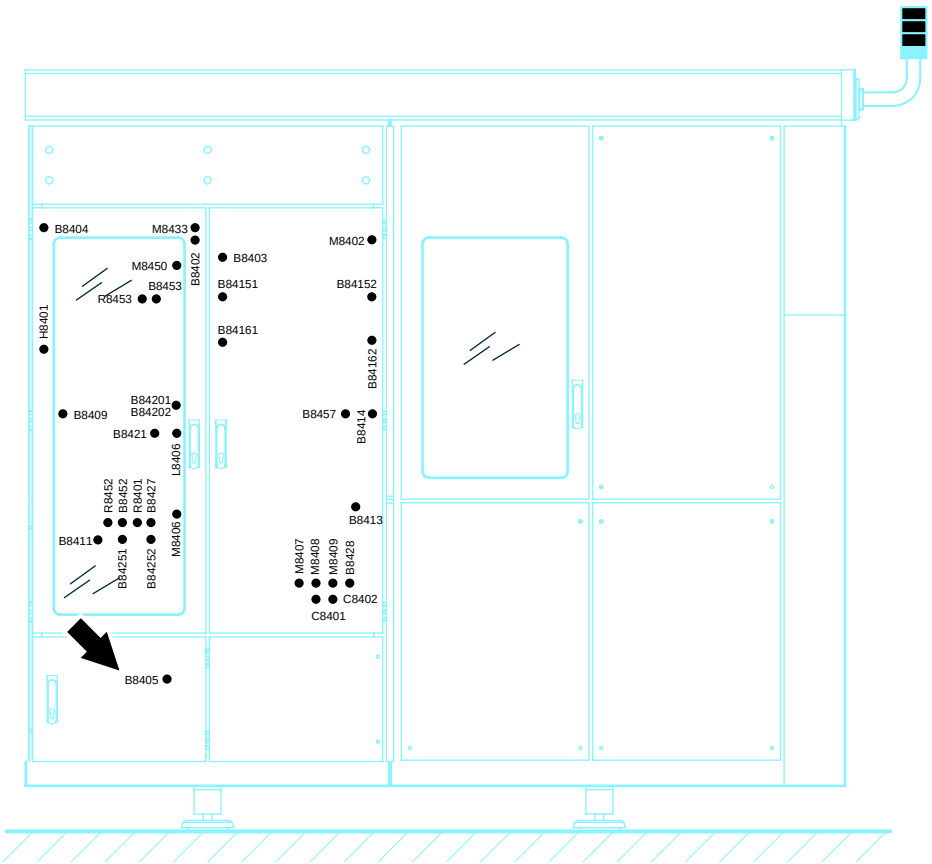

EM1.1TH900597en.fm

Machine orientation

Definition of direction

The below illustration shows the machine from above.

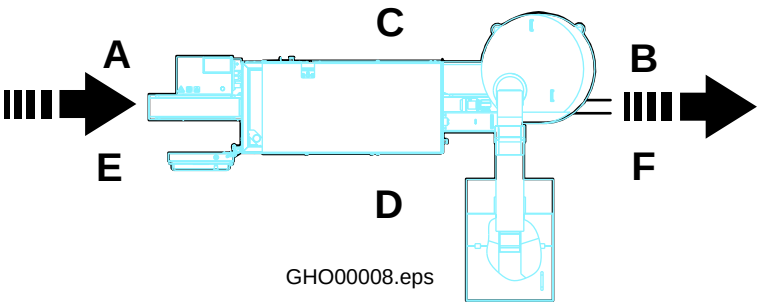

A. Indicates the **Rear** of the machine.

B. Indicates the **Front** of the machine.

C. Indicates the **Left** of the machine.

D. Indicates the **Right** of the machine.

E. indicates the **Infeed** of the machine.

F. indicates the **Discharge** of the machine.

Note! The arrows indicates the flow direction in the machine.

(Cont'd)

EM1.1TH900597en.fm

(Cont'd)

Main section location

Pos	Main section	Main section number
1	Infeed	662201-0100
2	Drive unit	662202-0100
3	Cap handling	662203-0100
4	Hotmelt equipment	662204-0100
5	Applicator unit	662205-0100
6	Machine body	662206-0100
7	Machine covering	662207-0100
8	Regular accessories	662208-0100
9	Magazine	662209-0100
10	Optional equipment (Not shown)	662210-0100
11	Electric equipment	672211-0100
12	Panel	2547705-0100
13	Warning lamp	1367689-0100

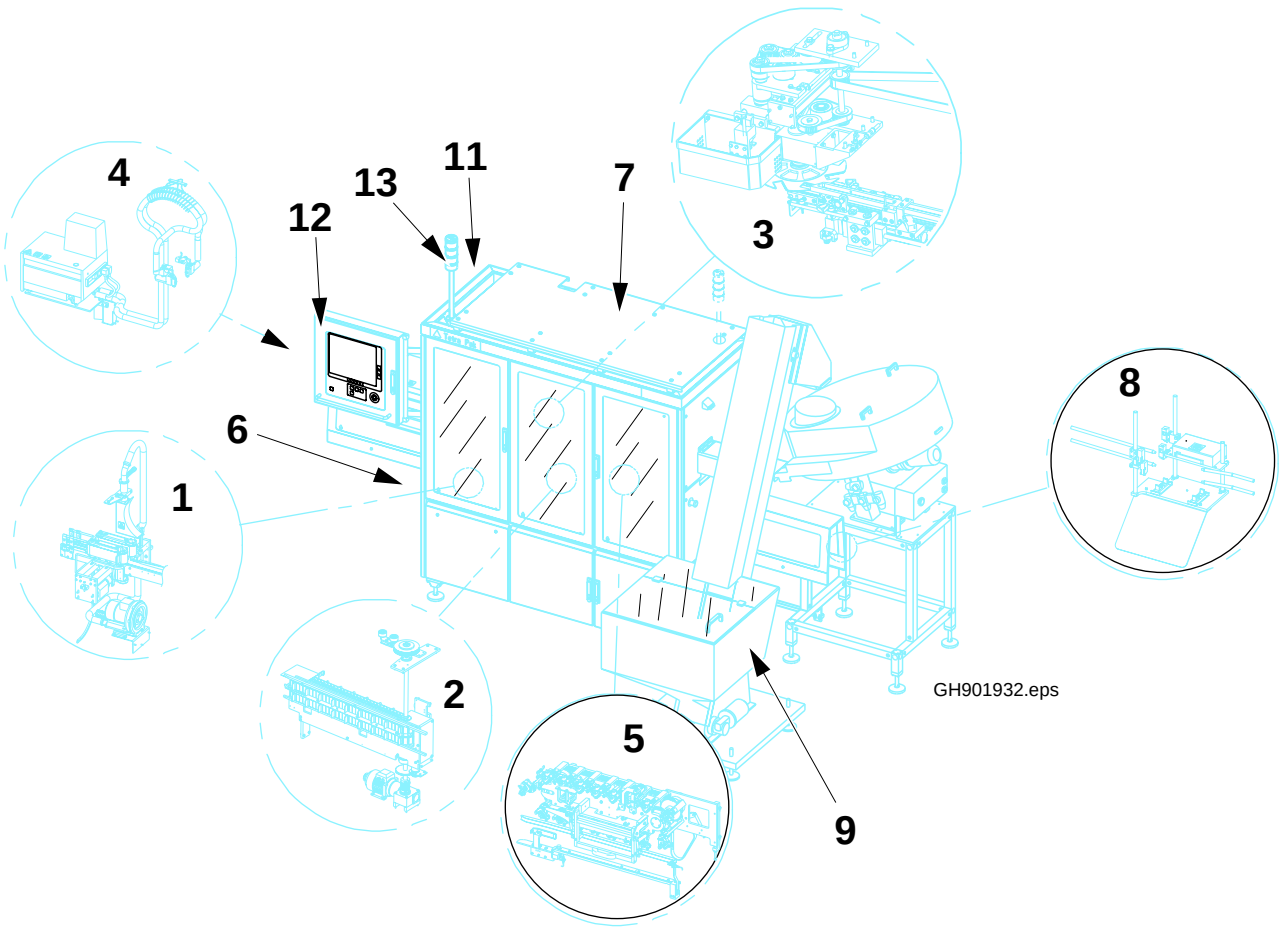

EM1.1TH900597en.fm

Abbreviations used in this manual

Abbreviation	English name	Translated
CE	Communautés Européennes / European Communities	
CPU	Central Processing Unit	
EEA	European Economic Area	
EM	Electrical Manual	
I/O	Input / Output (module)	
LED	Light Emitting Diode	
OM	Operation Manual	
SPC	Spare Parts Catalogue	

Terminology

Words	Explanation
control voltage	voltage used to control the machine
operating voltage	main supply (the voltage that makes the machine work)

EM1.1TH900597en.fm

2 Safety precautions

EM1.1TH900598en.fm

Table of contents

General **4**

Hazard information **4**

Warning signs **5**

Prohibition signs **7**

Warning and prohibition signs on the machine **8**

Requirements on personnel **9**

General 9

Service technician 9

Electrician 10

Machine operator 10

Emergency stop **11**

Main switch **12**

Filter regulator **13**

Shut-off valve 13

Doors and covers **14**

Doors 14

Covers 14

Electrical cabinet **15**

Hotmelt equipment **17**

General 17

Hotmelt unit 18

Hotmelt gun 19

EM1.1TH900598en.fm

Preheating equipment 20

Infeeder 20

Cap detector 21

Control panel 21

Chemical products 22

Hearing protection 22

Noise emission 22

EM1.1TH900598en.fm

General

DANGER!

Incorrect use of the equipment will put your life in danger!
Tetra Pak will take no responsibility for any fatal accidents, injuries to personnel or damage to the machine, if the Tetra Cap Applicator 47 or associated equipment are serviced without obeying the instructions in this Electrical Manual (EM).

DANGER!

Risk of immediate danger to life!
Never try to inch or run the machine if any component of the safety system is non-operational.
All non-operational components of the safety system must be changed immediately.

Hazard information

Hazard information in this document has the following significance:

DANGER!	**Immediate danger to life!** Failure to obey this information will put **your life in danger**!
WARNING!	**Risk of serious personal injury!** Failure to obey this information could result in **serious personal injury**!
Caution!	**Risk of minor personal injury!** Failure to obey this information may result in **minor personal injury**!
Important!	**Risk of damage to equipment!** Failure to obey this information could result in **damage to equipment**!

Note! Is used to emphasize important information.
A **Note** is not to be regarded as hazard information.

EM1.1TH900598en.fm

Warning signs

DANGER!

Risk of electrical shock!
Failure to obey will put your life in danger.

Enclosures which do not clearly show that they contain electrical devices are marked with the warning sign below.

GH100784.eps

WARNING!

Hot surface!
Failure to obey could result in burn injuries.

Hot surfaces are marked with the warning sign below.
The temperature may exceed 60°C, 140°F.

GH100787.eps

(Cont'd)

EM1.1TH900598en.fm

(Cont'd)

WARNING! **Heat energy!**
Failure to obey could result in burn injuries.

The warning sign below indicates entrapped heat energy in the area where the sign is placed.
The temperature may exceed 60°C, 140°F.

GH100788.eps

WARNING! **Hazardous voltage!**
Can shock, burn or cause death.

The warning sign below indicates hazardous voltage in the area where the sing is placed.

EM1.1TH900598en.fm

Prohibition signs

WARNING!

Do not touch!
Failure to obey could result in loss of fingers or other body parts.

The prohibition sign to the left indicates a risk of personal injury in the area where the prohibition sign is placed.

GH100790.eps

Caution!

Risk of damage to equipment!
Failure to obey could result in damage to equipment.

Do not let water into this area.

EM1.1TH900598en.fm

Warning and prohibition signs on the machine

In the figure below shows the warning and prohibition signs which are attached to the machine.

If any sign is missing, worn out or damaged, a new set of signs must be ordered.

When ordering, please refer to the following SPC-number 1497250-0100.

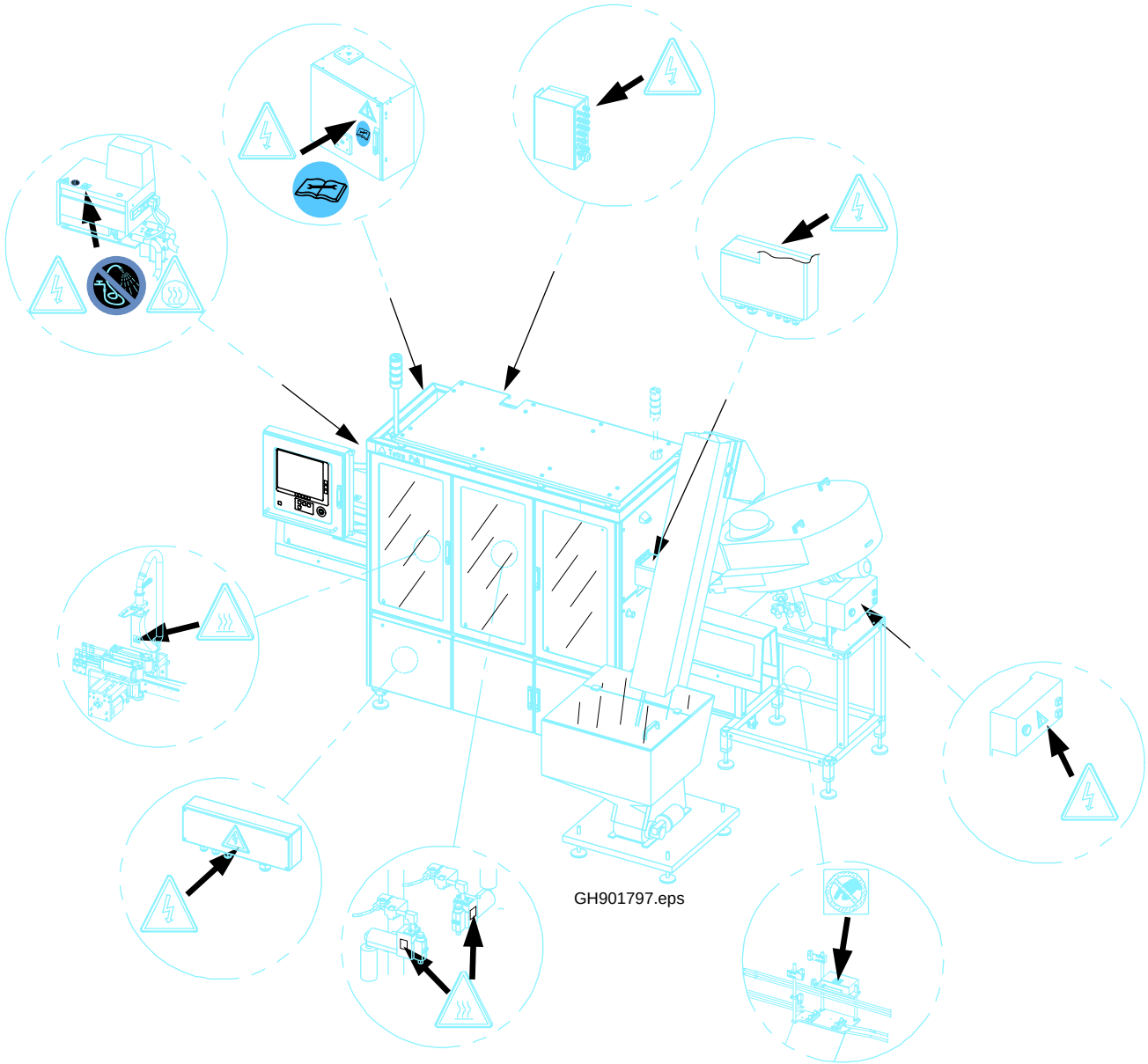

EM1.1TH900598en.fm

Requirements on personnel

DANGER!

Risk of immediate danger to life!
Failure to obey the Safety precautions will put your life in danger.
All personnel must regard all electrical equipment as live.

The work is to be carried out in such a way that there will be no risk injury to personnel.

General

During maintenance or service work, the service technician and the electrician are responsible not only for the machine, but for the safety of the personnel in the vicinity of the machine as well!

It is also the responsibility of the service technician and the electrician to ensure that the machine safety devices are fully operational before he/she finishes the maintenance or service work.

Service technician

Only trained or instructed service technicians are allowed to work on the machine.

Service technicians may be:

- technicians employed by **Tetra Pak**

  The Tetra Pak technicians are Tetra Pak employees who have completed training courses at the Tetra Pak Technical Training Centers or have an equivalent knowledge.
- technicians employed by **suppliers**
  These are technicians employed by suppliers to Tetra Pak, and they too have completed training courses at the Tetra Pak Technical Training Centres or have equivalent knowledge.
- technicians employed by the **customer**

  Technicians employed by the customer must have the following skills:
  - capable of reading (English or native) technical information
  - able to understand technical drawings
  - basic knowledge of mechanics and electronics
  - basic knowledge of mathematics
  - capable of handling (special) tools

(Cont'd)

EM1.1TH900598en.fm

(Cont'd)

Electrician

Electricians should:

- be certified according to local regulations
- have experience of similar types of installations
- have proven skills in reading and working from drawings and cable lists
- have knowledge of local safety regulations for power and automation

Work with the electrical equipment in the machine must be performed by **skilled persons only.**

According to EN 60204-1:1997 clause 3.52 a skilled person is:

– *a person with relevant education and experience to enable him or her to perceive risks and to avoid hazards which electricity can create*.

Machine operator

Only trained or instructed persons are allowed to operate the equipment.

The machine operator is an individual that has enough training and/or knowledge to run the equipment in the correct way.

EM1.1TH900598en.fm

Emergency stop

In event of danger to people or risk of damage to the machine, one of the **Emergency stop** buttons must immediately be pushed.

To stop the machine immediately in an emergency, you must know the exact location of the Emergency stop buttons.

Emergency stop must only be used in the event of danger to people or machinery. To stop production in the normal way, see the **Stop** section in the Operation Manual (OM).

Note! Emergency stops do not disconnect the electrical supply to the machine.

Location of emergency stop buttons

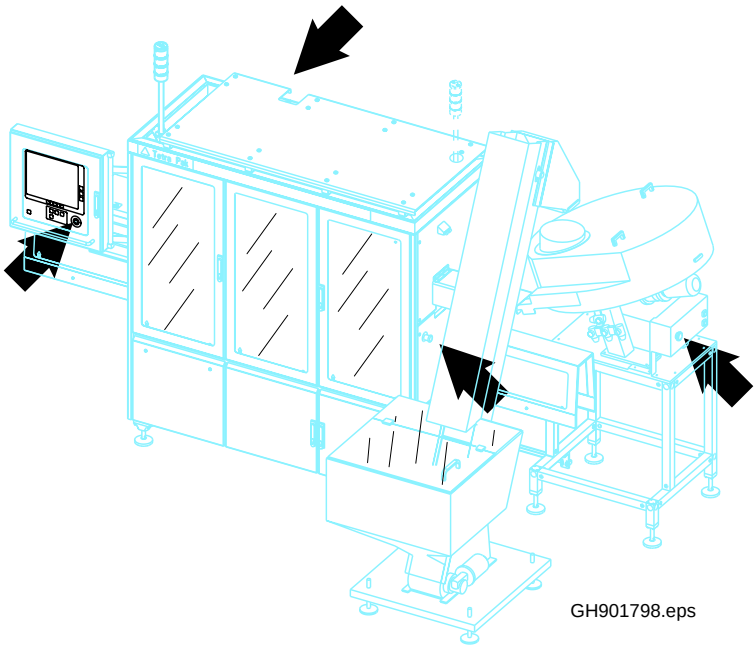

Example of emergency stop button

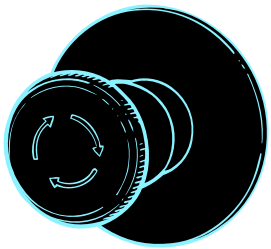

GH100876.eps

GH901798.eps

EM1.1TH900598en.fm

Main switch

DANGER!

Risk of electrical shock!
Before any service work is carried out the **Main switch** must be turned **OFF** and locked with a padlock. The key to the padlock must be removed by the service technician or the electrician and retained in his/her possession until all work is completed.

Examples of such service works are:

- disconnection of electrical cables
- replacement of motors, etc.
- service work in electrical cabinet, connection boxes, etc.
- dismantling of parts in order to prohibit involuntary starts
- service work in machine sections not visible from the control panel

However, for settings of photocells, proximity switches, frequency converters, etc. power is needed. In the MM pages for those settings the status is Power ON: Stop the machine in the correct way. Open a safety switched door and then carry out the settings.

Note! Check that the safety system is working properly. Check also that the machine is actually stopped due to the opening of the door.

WARNING! **Do not by-pass the safety system and carry out any settings while the machine is in Production mode.**

EM1.1TH900598en.fm

Location of main switch

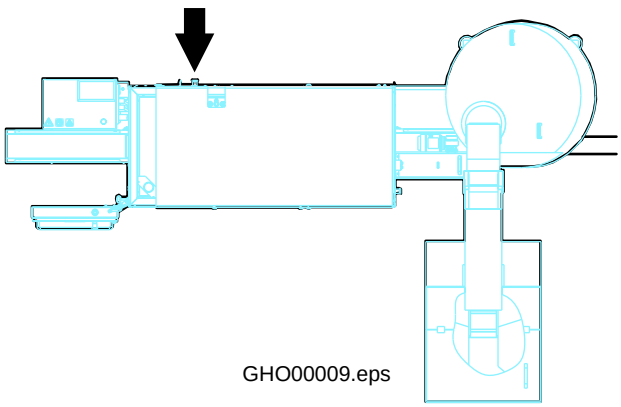

Main switch

Filter regulator

Shut-off valve

WARNING! **Risk of personal injury!**
Before starting service work, make sure that the machine is **not** pressurized. The **Shut-off valve** (2) must be turned OFF and locked with a padlock. It is turned OFF when the regulator handle (1) is pressed down and visible at the underside of the shut-off valve (2).

The key to the padlock must be removed by the service technician or the electrician and retained in his/her possession until all work is completed.

Note! In the picture below the **Shut-off valve** (2) is turned OFF.

EM1.1TH900598en.fm

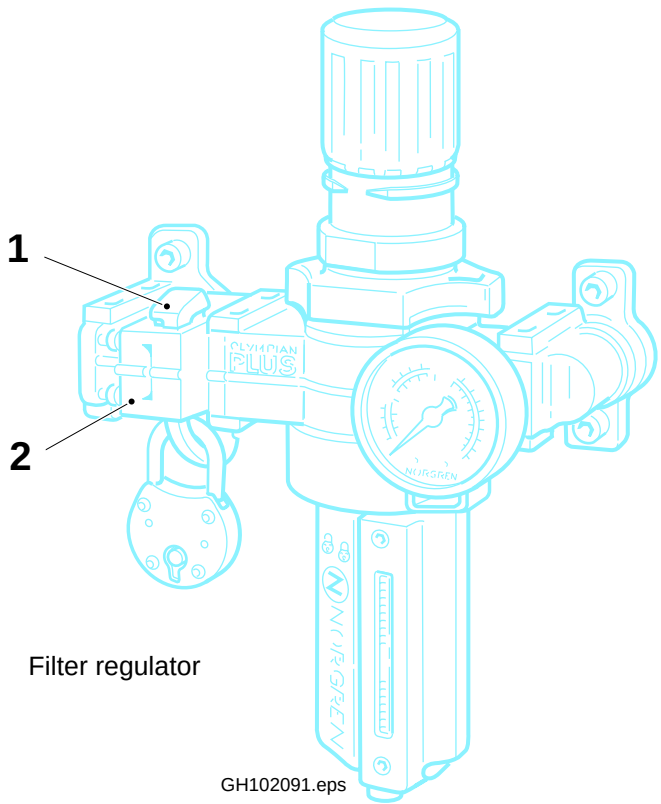

Filter regulator

GH102091.eps

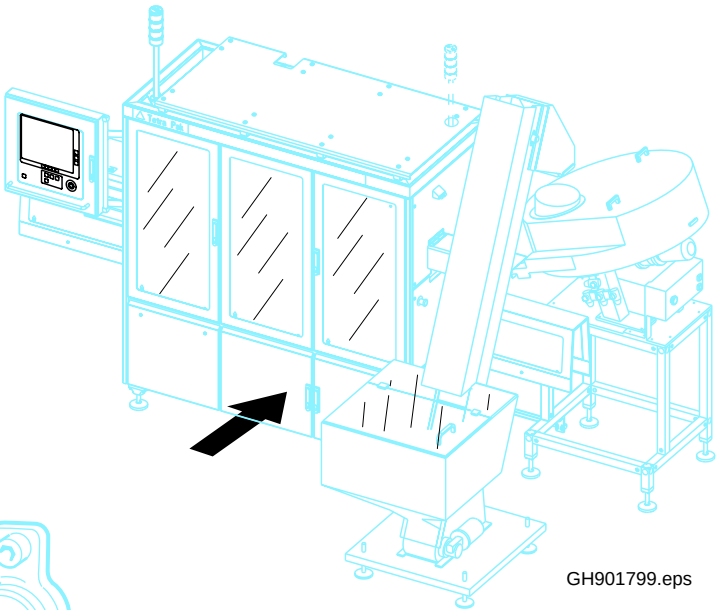

GH901799.eps

Location of filter regulator

1 Regulator handle
2 Shut-off valve

Doors and covers

WARNING! **Moving parts and hot surfaces could cause serious injuries!**
Never try to inch or run the machine if any safety switch is non-operational or any cover is not fitted.

Doors

All doors leading to risk areas are provided with safety switches. These switches are part of the safety system and **must under no circumstances be bridged or by-passed or otherwise made non-operational.**

Do not open doors during production.
Never stop the machine by opening a door with a safety switch.
The machine may perform a reciprocating movement directly after a stop; also some machine parts may still be hot.

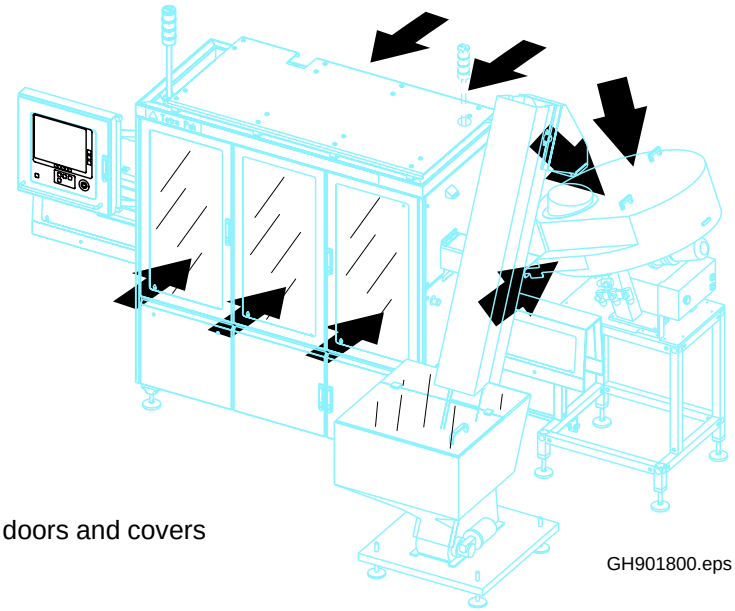

Location of doors and covers

EM1.1TH900598en.fm

Covers

All covers are screwed on to the machine.

Note! After maintenance, check that all covers are fitted to the machine before it is inched or run.

Electrical cabinet

DANGER!

Risk of electrical shock!
The voltage is 400V inside the electrical cabinet. Risk of immediate danger to life through electrical shock. In case of accident, immediately call for medical attention.

After the **Main switch** has been turned OFF, there can still be high voltage in the electrical cabinet. Discharge time approximately five minutes.

Work inside the electrical cabinet must be performed by skilled persons only.

DANGER!

Risk of electrical shock!
Always make sure that the electrical cabinet door is locked after performing any type of work in the electrical cabinet.

GH100784.eps

Location of electrical cabinet

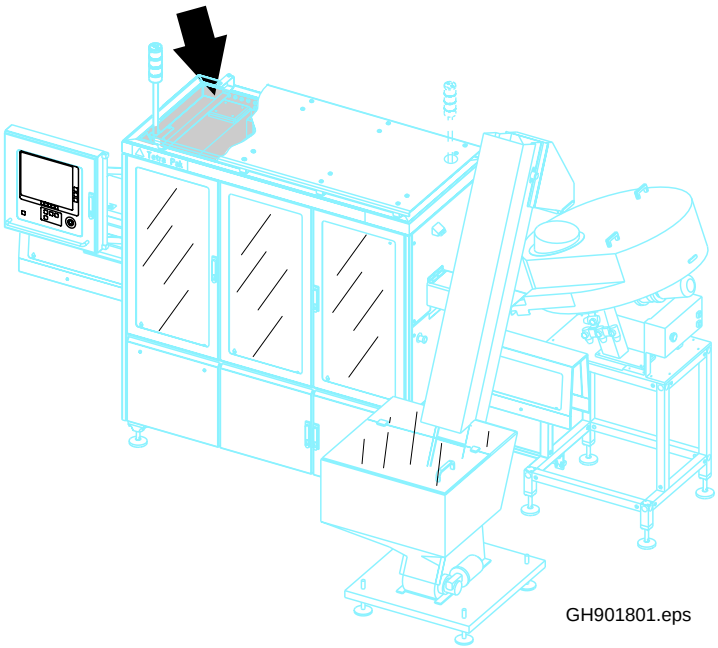

GH901801.eps

(Cont'd)

EM1.1TH900598en.fm

(Cont'd)

Socket outlet
Hazardous voltage.
Read Maintenance Manual BEFORE using this socket outlet.
Failure to follow maintenance instruction could result in death or serious injury.

The illustration show the socket outlet (1) and the residual current device (2). Their location in the electrical cabinet (3) are shown by arrows.

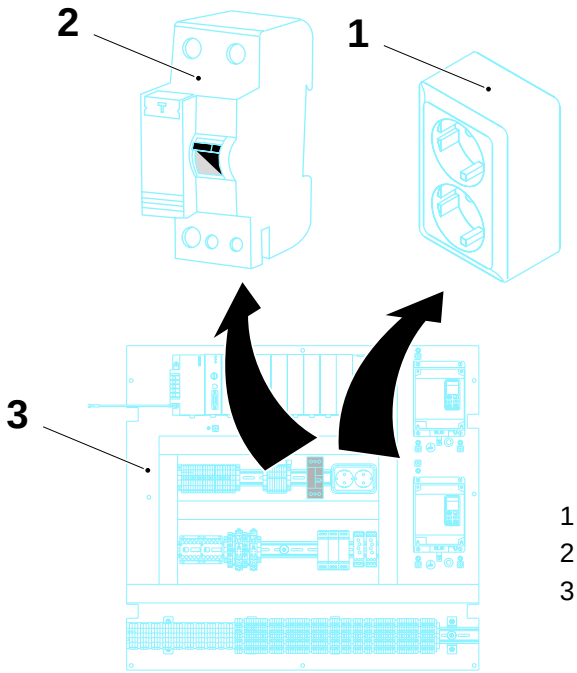

GH901787.eps

1 Socket outlet
2 Residual current device
3 Electrical cabinet

EM1.1TH900598en.fm

Hotmelt equipment

General

Risk of electrical shock!
The voltage is 400V inside the hotmelt unit. Risk of immediate danger to life from electrical shock.

Risk of personal injury!
All service work on the hotmelt unit must be carried out by authorized personnel.

Always wear safety glasses, protective gloves, and other protective clothing to avoid injuries caused by splashing hotmelt material.

Failure to relieve any remaining air or liquid (adhesive) pressure may cause serious injuries from burning when the hotmelt filter is detached or flushed.

EM1.1TH900598en.fm

(Cont'd)

Hotmelt unit

Important! **Risk of equipment damage!**
Never flush water or any other liquid towards the hotmelt unit when cleaning the machine. Failure to obey could result in damage to equipment.

WARNING! **Risk of burns!**
During heating and production the hotmelt unit gets hot.
Do not touch the hot melt unit and beware of the entrapped heat inside the unit when service is performed!

GH100784.eps

GH100788.eps

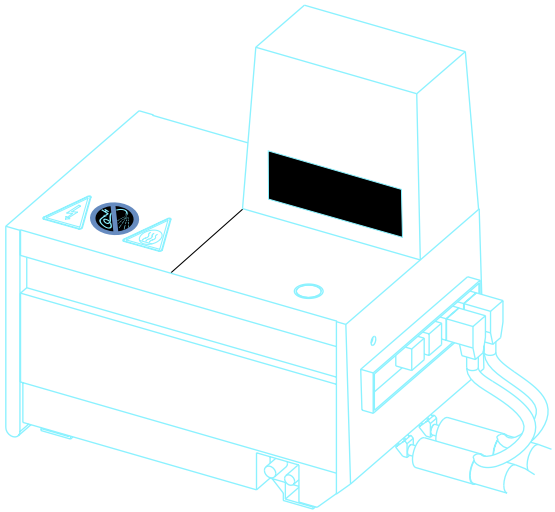

GH901921.eps

EM1.1TH900598en.fm

(Cont'd)

(Cont'd)

Hotmelt gun

Important! **Risk of equipment damage!**
Never flush water or any other liquid towards the hotmelt unit when cleaning the machine. Failure to obey could result in damage to equipment.

WARNING! **Risk of burns!**
During heating and production the hotmelt gun and its cover gets hot and there is risk of severe burns.
Do not touch the hotmelt gun or the cover around it and beware of the entrapped heat when service is performed!

GH100787.eps

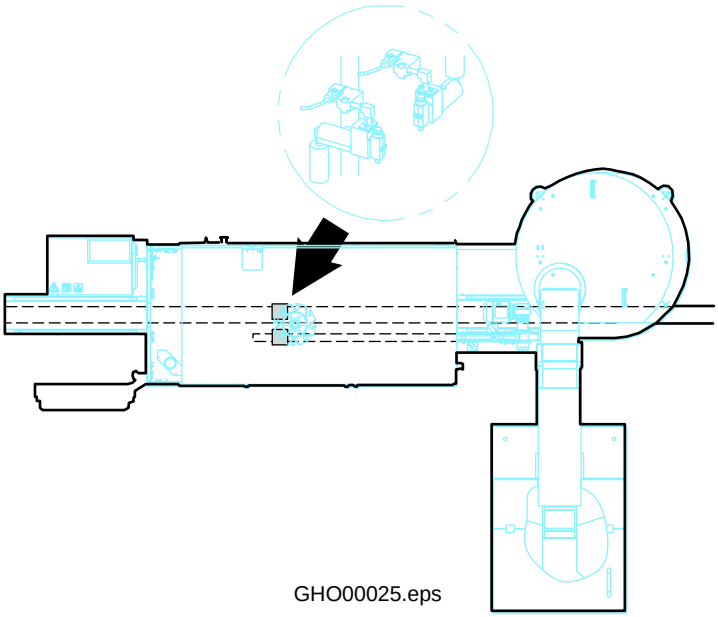

GHO00025.eps

EM1.1TH900598en.fm

Preheating equipment

WARNING!

Risk of burns!
The preheating equipment is very hot and there is risk of severe burns. Never touch the preheating equipment.

GH100787.eps

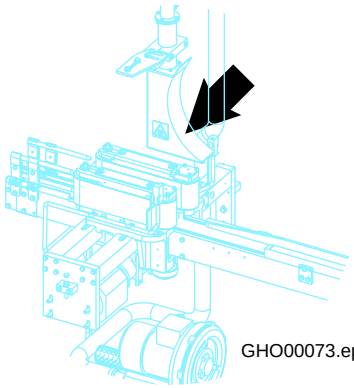

GHO00073.eps

Infeeder

Feeder panel

DANGER!

Risk of electrical shock!
Never flush water or any other liquid towards the feeder panel when cleaning the machine. Failure to obey will result in danger to your life.

GH100784.eps

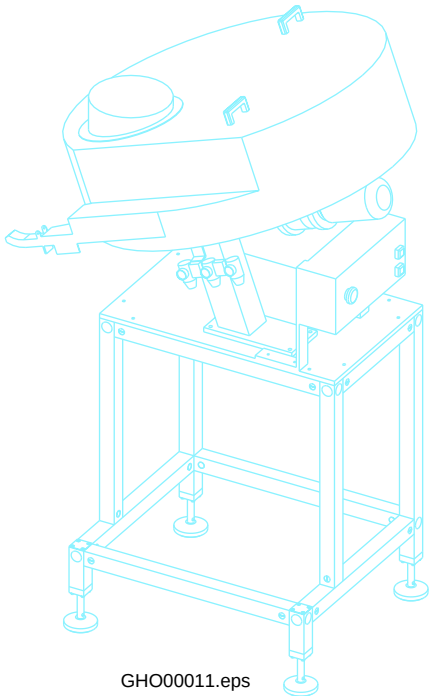

GHO00011.eps

EM1.1TH900598en.fm

Cap detector

Caution! **Risk of personal injuries!**
Never put any part of the body such as a hand at the cap detector when running the machine. Risk of injuries caused by the movable pusher.

GH100790.eps

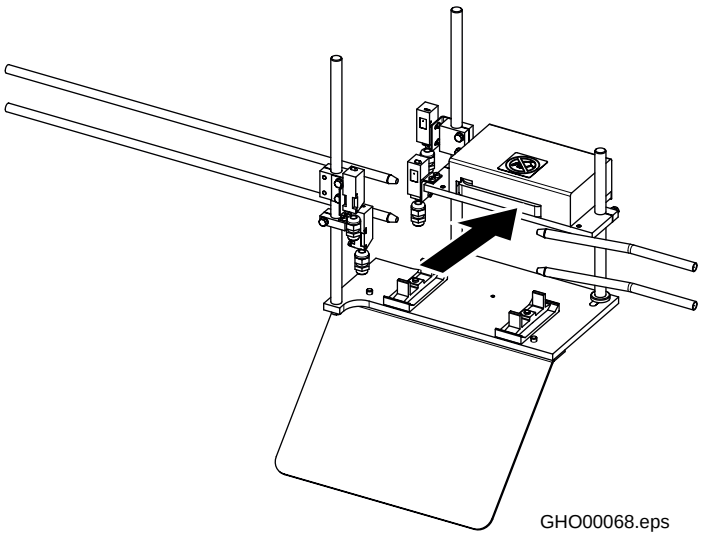

GHO00068.eps

Control panel

WARNING! **Risk of personal injury!**
Be aware of the control panel due to risk of personal injury caused by sharp edges of the control panel.

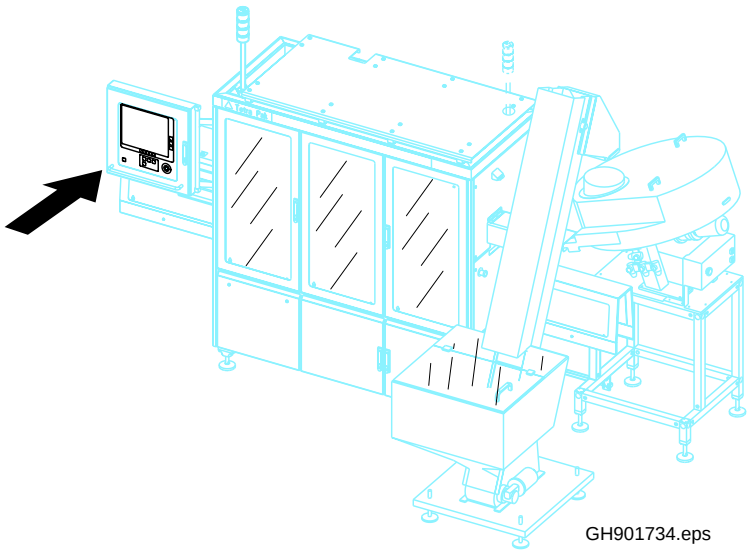

GH901734.eps

EM1.1TH900598en.fm

Chemical products

WARNING! **Risk of personal injury!**
Can be flammable or hazardous to health. Read the warnings on the container labels!

When handling lubricants and cleaning solutions, always obey the warnings on the container labels.

Always use safety equipment according to the instructions on the container labels. Always use gloves and safety glasses when handling chemical products.

For final handling of solutions, obey the instructions from the supplier.

Hearing protection

Caution! Risk of impaired hearing! Hearing protection is recommended.

It is recommended that hearing protection should be worn while the equipment is running.

Note! Always keep the hearing protection clean.

Noise emission

The table below give the noise level measurements for Tetra Cap Applicator 47 machines under the following conditions:

- machine on a concrete floor supported by standard feet
- production under normal operating conditions at 7,000 p/h

Values declared in accordance with ISO 4871			
Symbol	**Definition**	**Declared value**	**Notes**
L_{pA}	Emission sound pressure level, operator position	76 dB (A)	Values determined using the basic standard ISO 11204 (Engineering method)
K_{pA}	Uncertainty factor	2.5 dB (A)	
L_{WA}	Measured A-weighted sound power level	90.5 dB (A)	Values determined using the basic standard ISO 3744 (Engineering method)
K_{WA}	Uncertainty factor	2.5 dB (A)	

EM1.1TH900598en.fm

3 Electrical system description

EM1.1THO00010en.fm

Table of contents

Safety system 3-3
Emergency stop 3-3
Doors applicator 3-4
Doors infeeder 3-5

EM1.1THO00010en.fm

Safety system

Emergency stop

P.S001	EMERGENCY STOP
M.S102	EMERGENCY STOP
M.S103	EMERGENCY STOP
M.S104	EMERGENCY STOP

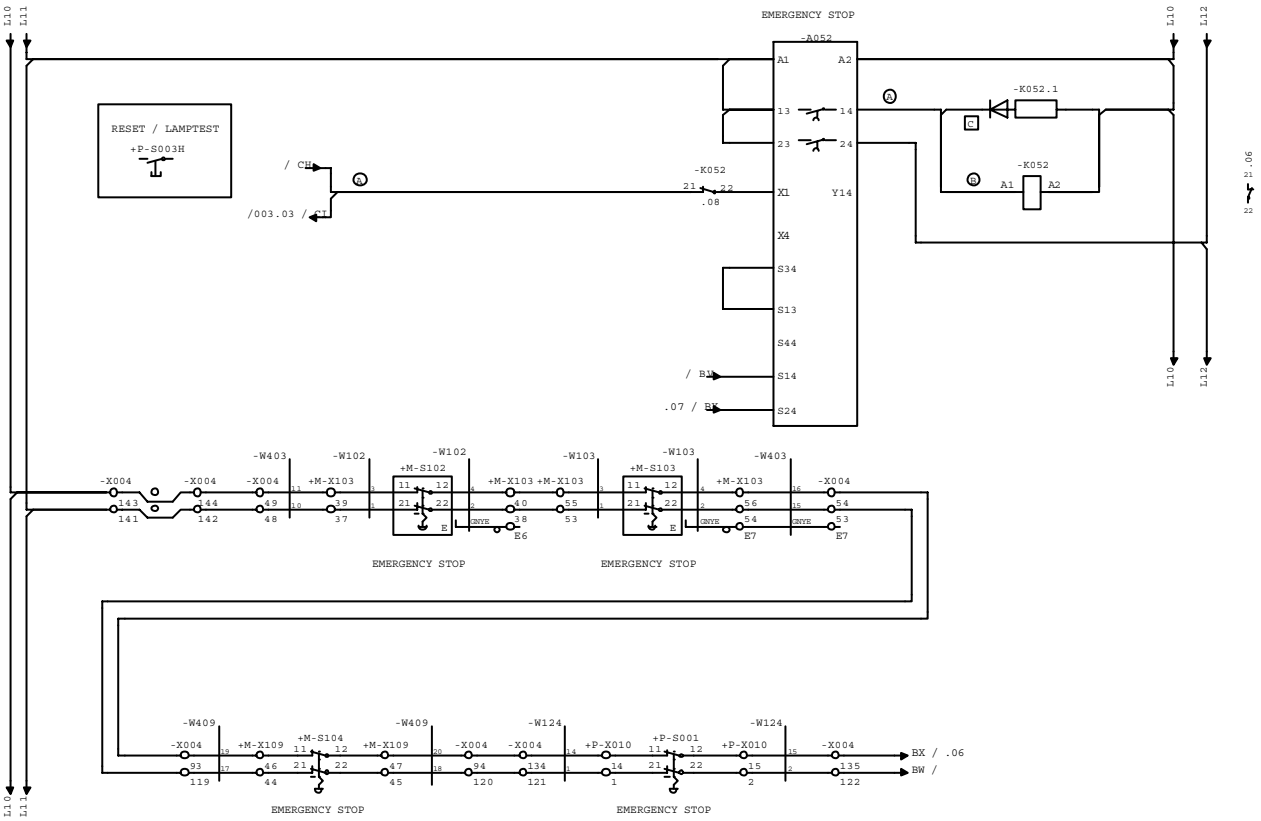

EM1.1THO00010en.fm

Doors applicator

M.B117	DOOR BELT BRAKE
M.B133	DOOR LEFT SIDE
M.B134	DOOR LEFT SIDE
M.B135	DOOR RIGHT SIDE
M.B136	DOOR RIGHT SIDE

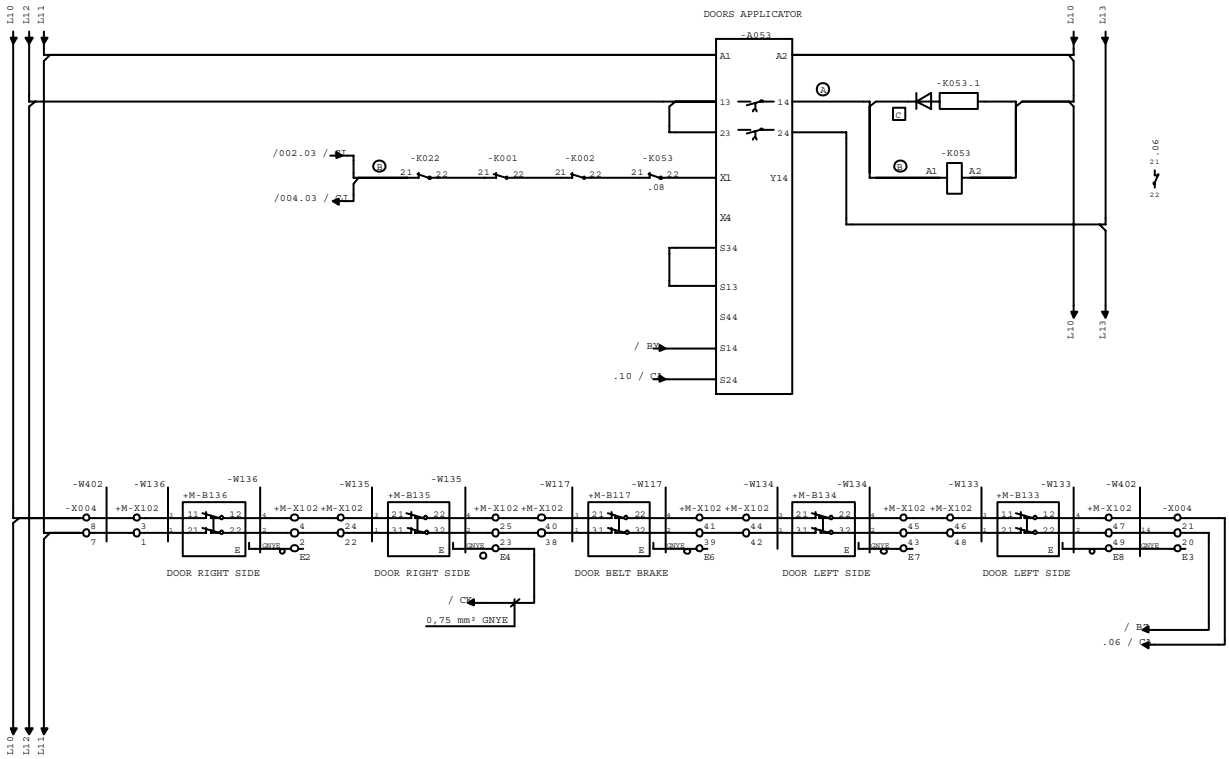

EM1.1THO00010en.fm

Doors infeeder

M.B137	DOOR INFEEDER
M.B138	DOOR INFEEDER
M.B139	DOOR INFEEDER

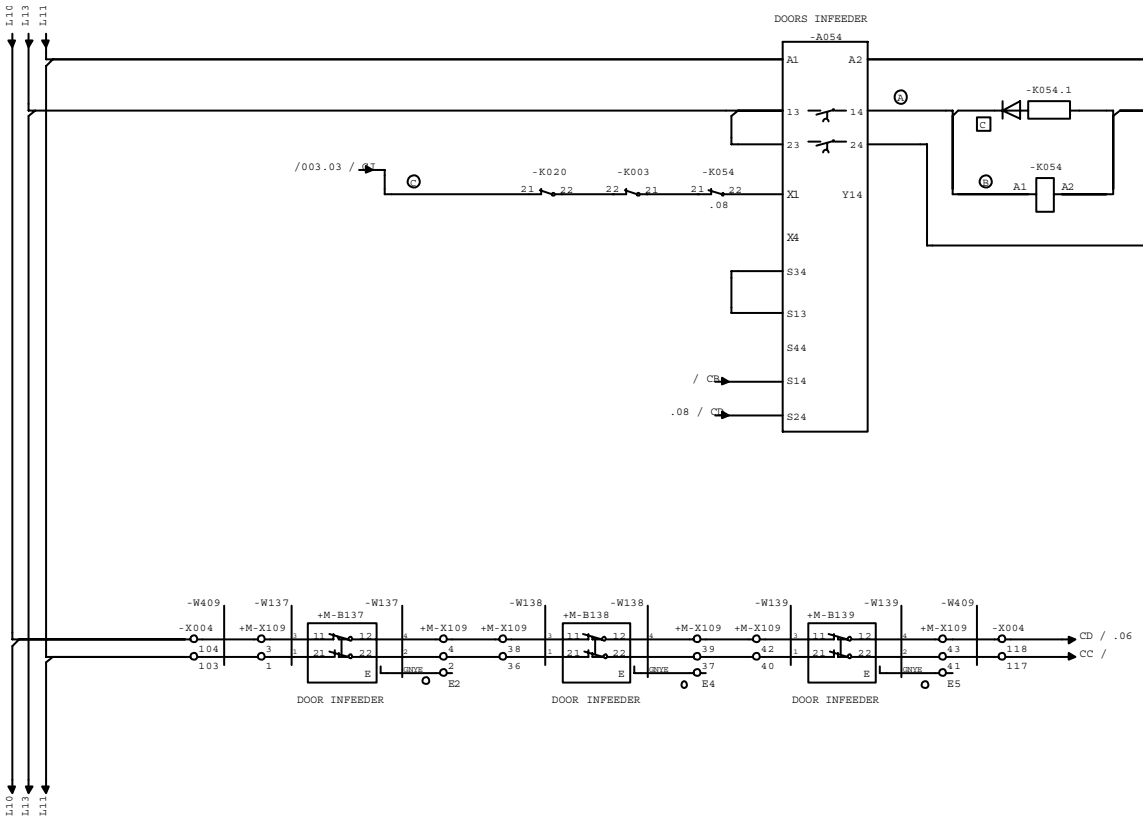

EM1.1THO00010en.fm

This page intentionally left blank

EM1.1THO00010en.fm

4 Component location

EM1.1TH900617en.fm

This page intentionally left blank

EM1.1TH900617en.fm

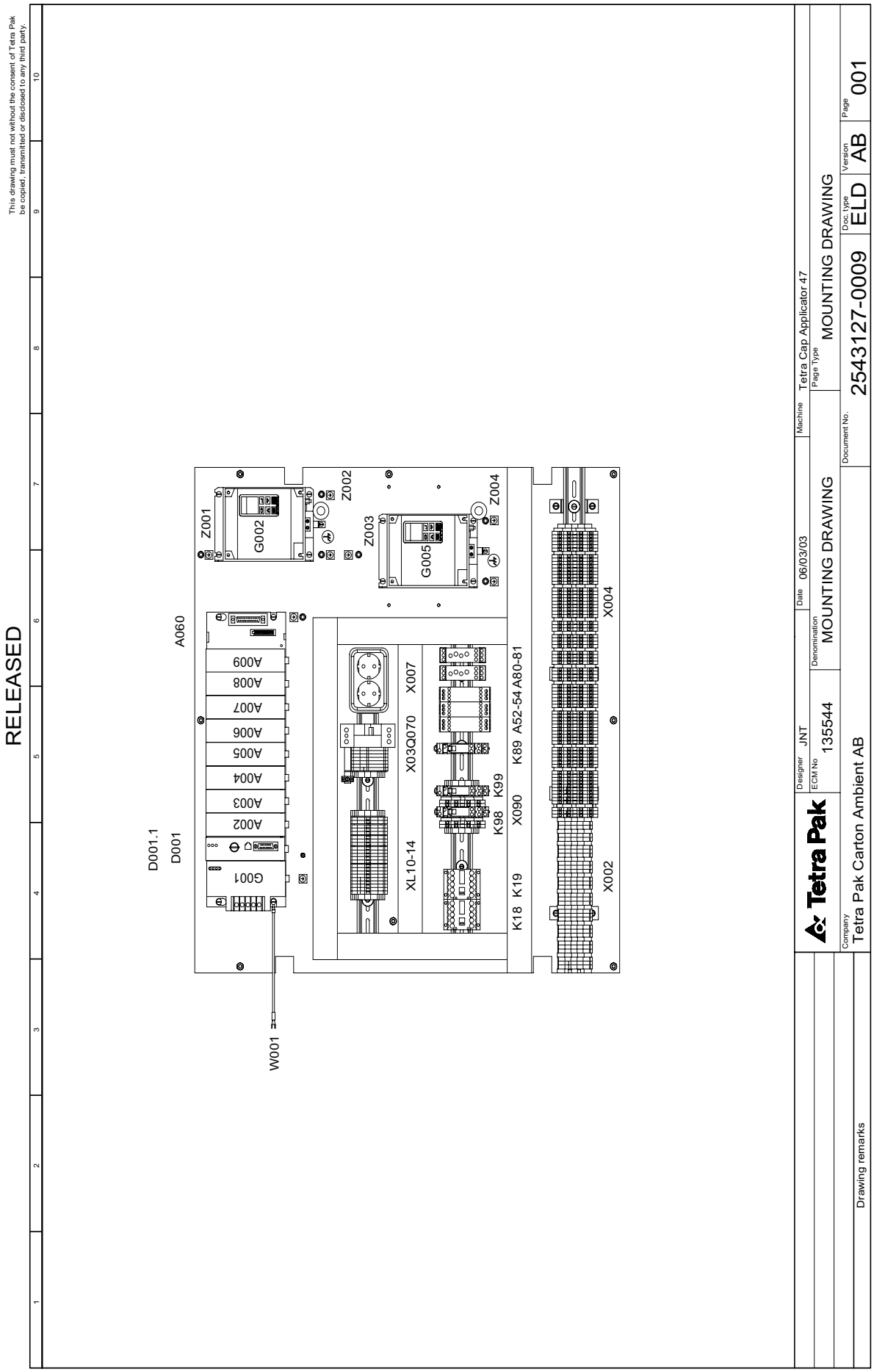
RELEASED
This drawing must not without the consent of Tetra Pak be copied, transmitted or disclosed to any third party.
EM1.1TH900617en.fm
A060
D001.1
D001
G001
A002
A003
A004
A005
A006
A007
A008
A009
W001
Z001
G002
Z002
Z003
G005
Z004
XL10-14
X03Q070
X007
K98
K99
K18
K19
X090
K89
A52-54
A80-81
X004
X002
Tetra Pak
Designer JNT
ECM No 135544
Date 06/03/03
Denomination MOUNTING DRAWING
Machine Tetra Cap Applicator 47
Page Type MOUNTING DRAWING
Document No. 2543127-0009
Doc. type ELD
Version AB
Page 001
Company Tetra Pak Carton Ambient AB
Drawing remarks

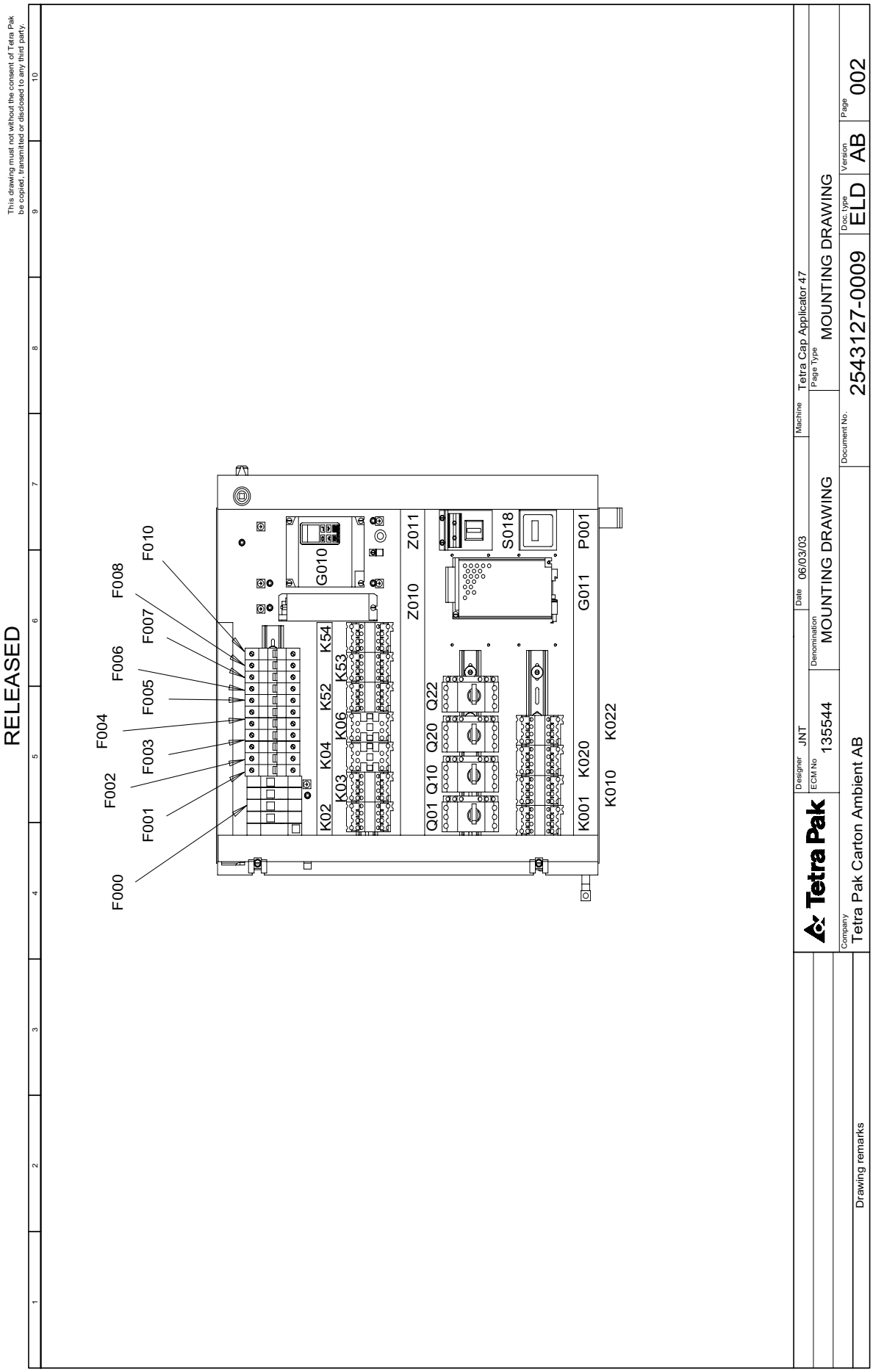

EM1.1TH900617en.fm

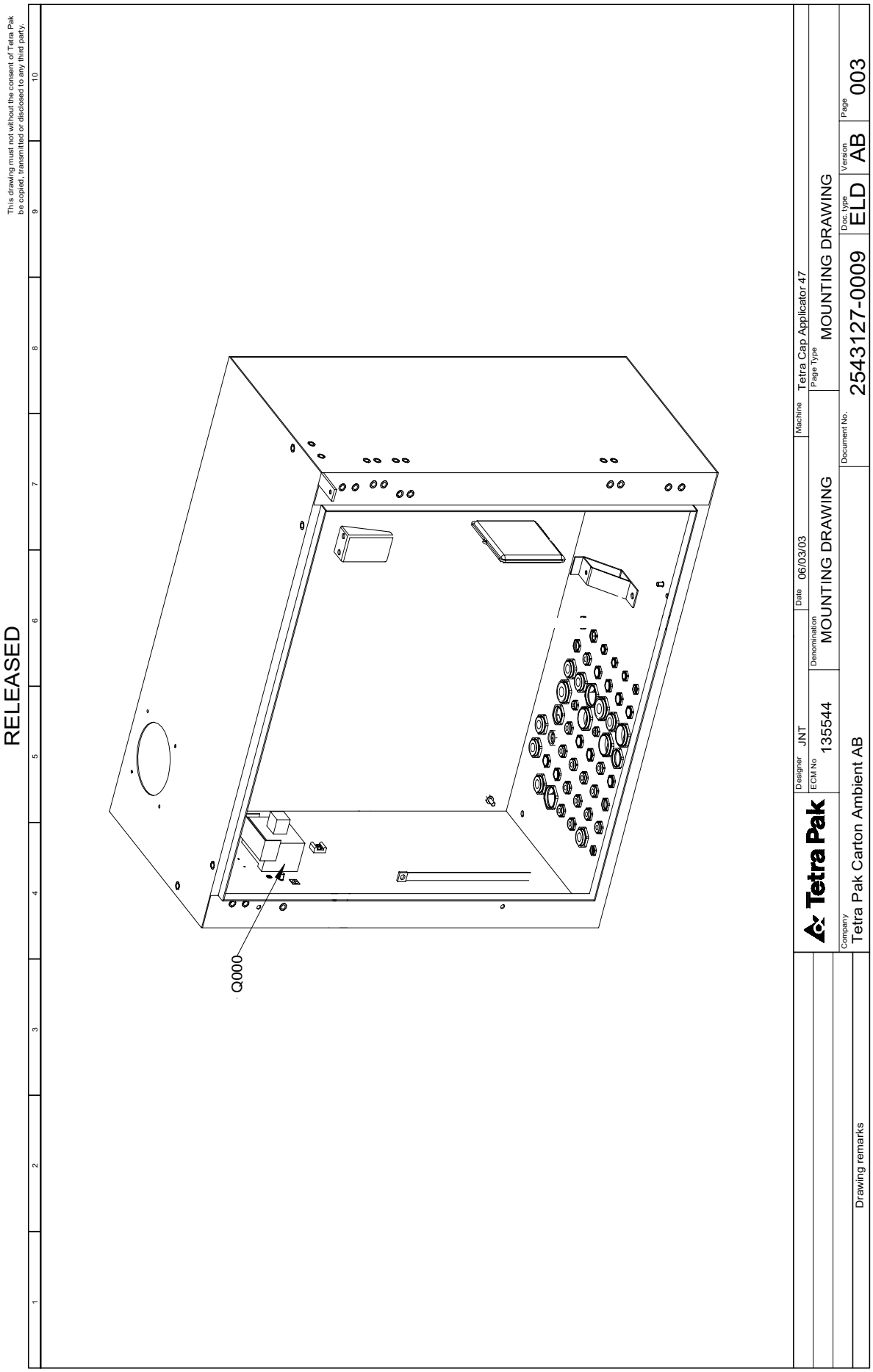

EM1.1TH900617en.fm

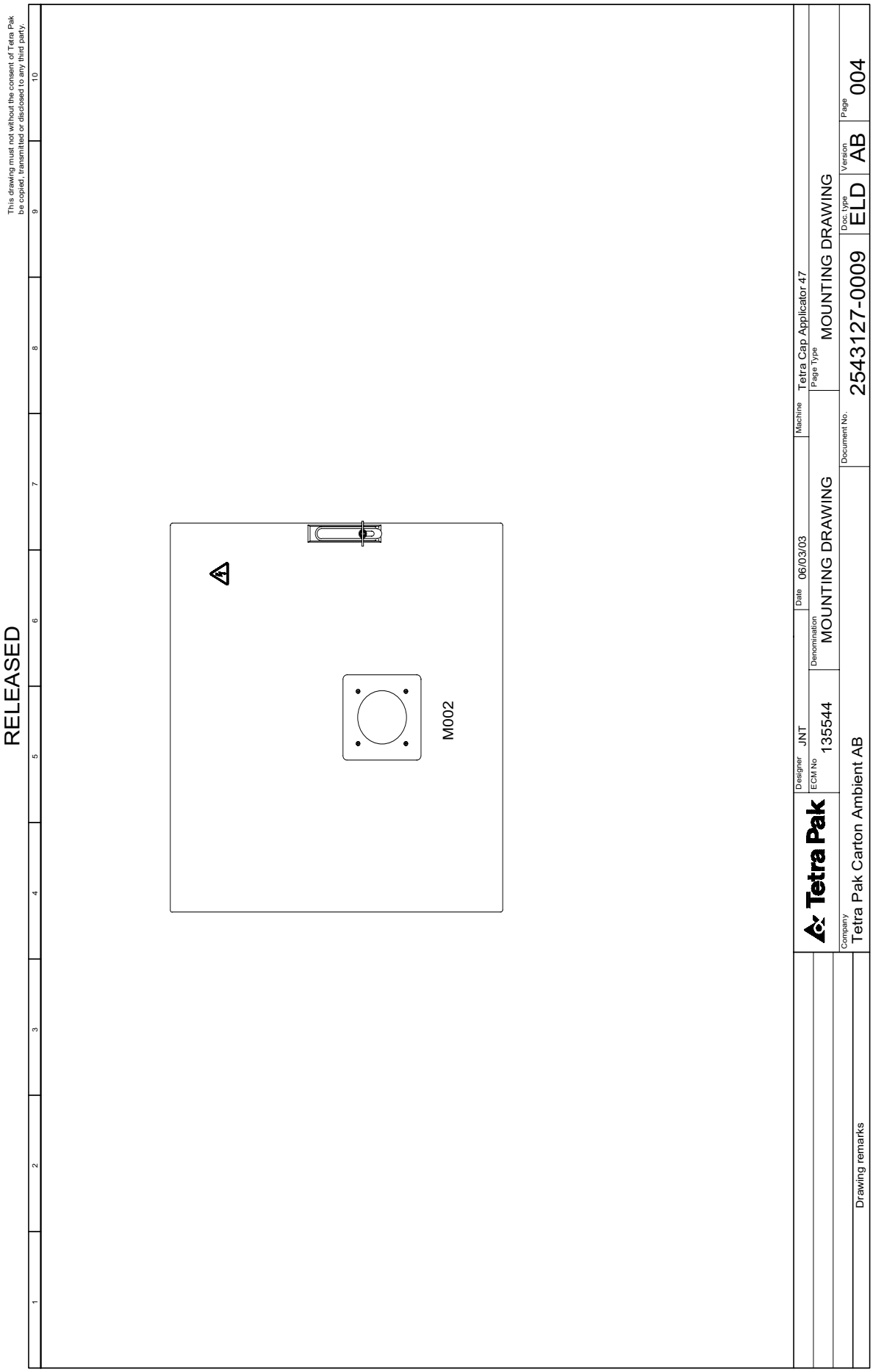

EM1.1TH900617en.fm

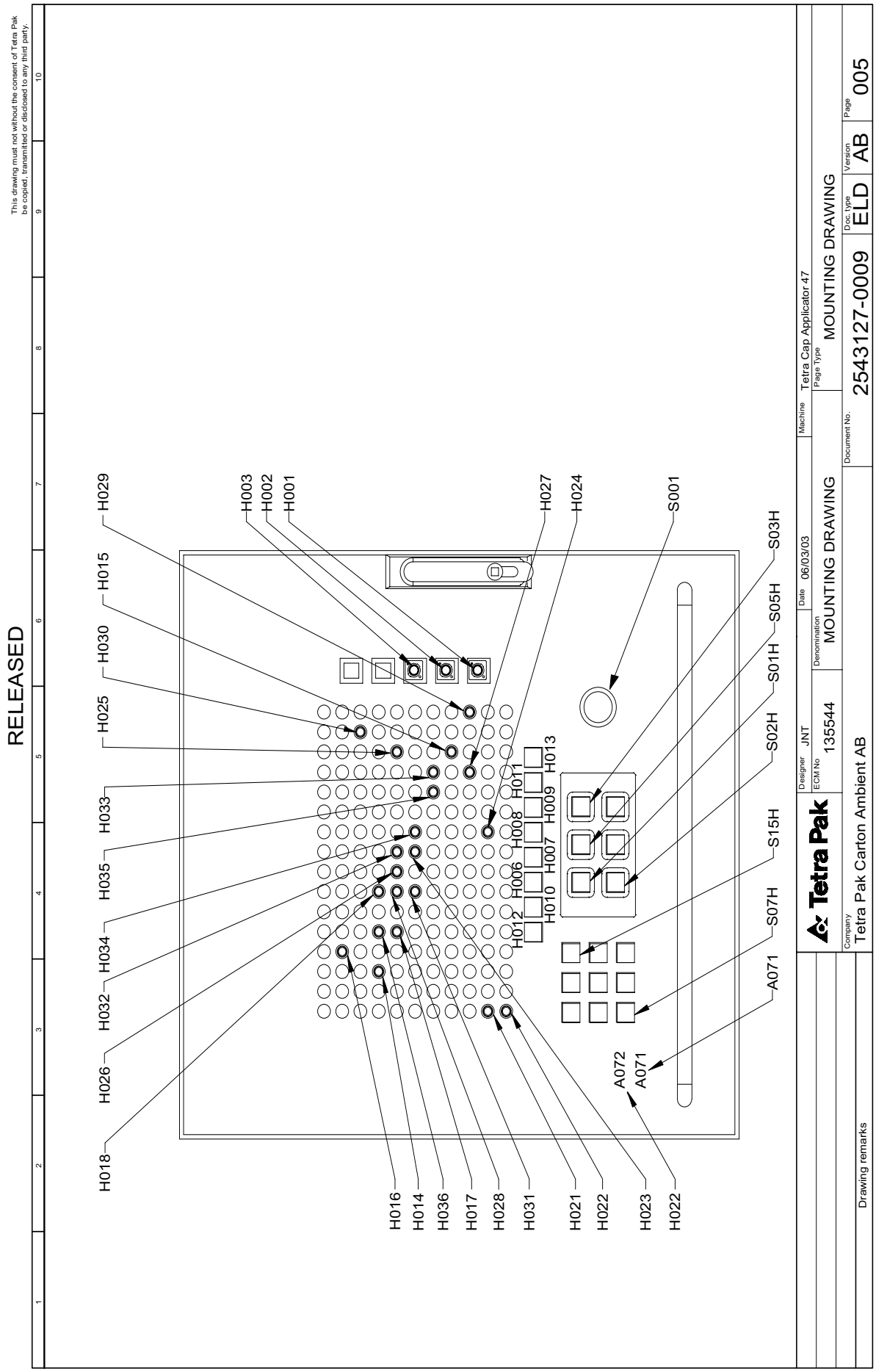

EM1.1TH900617en.fm

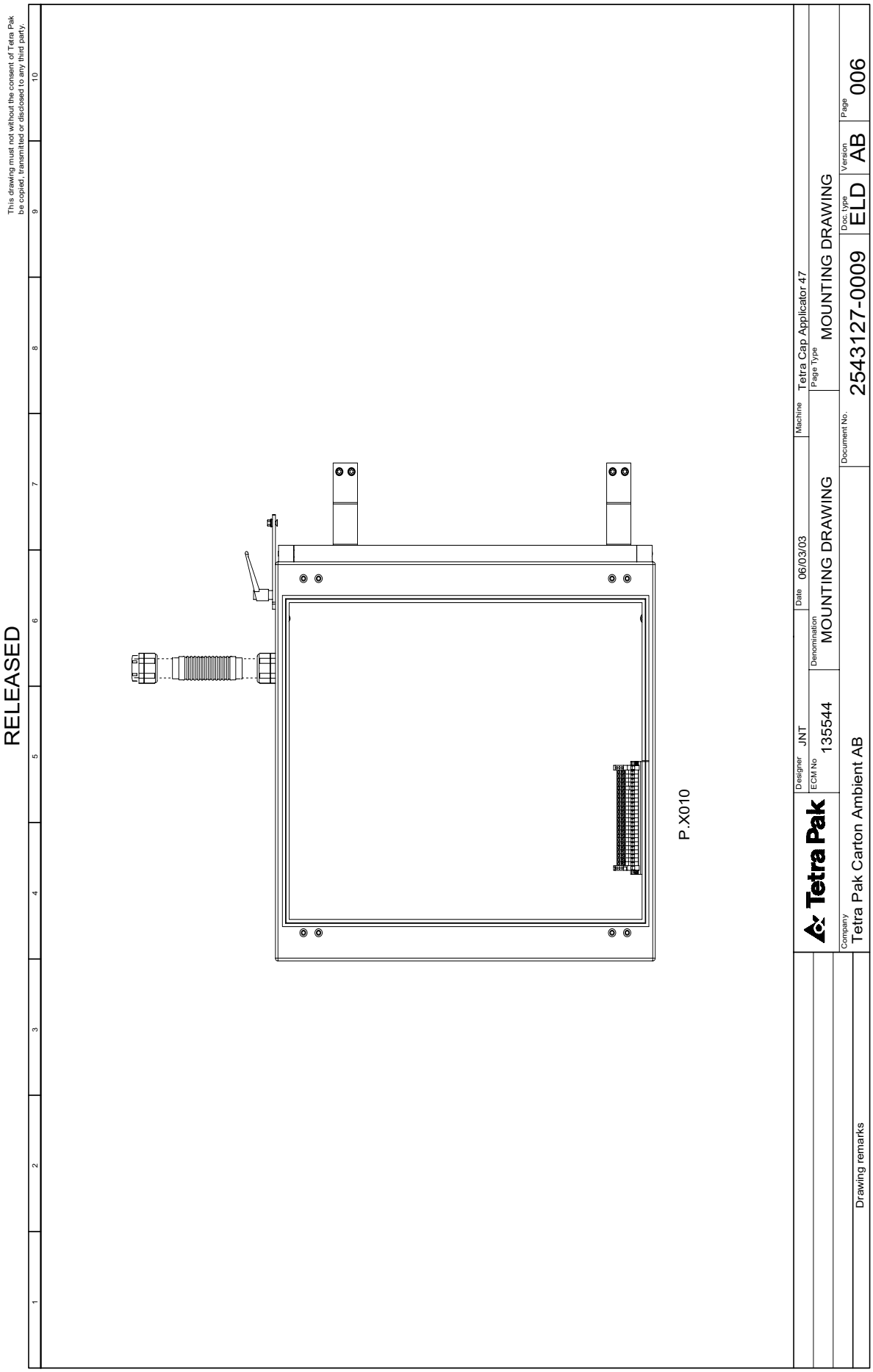

EM1.1TH900617en.fm

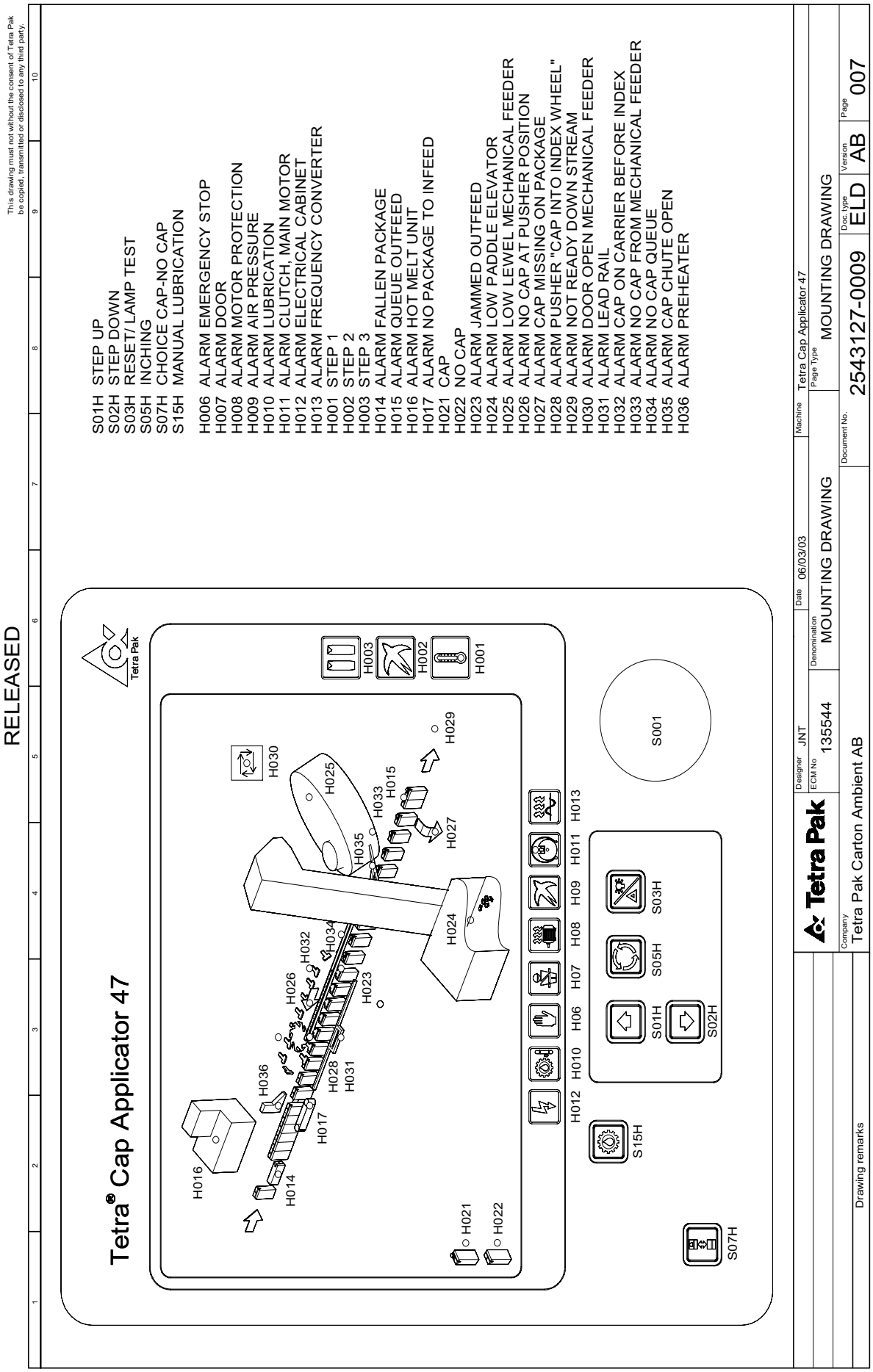
RELEASED
This drawing must not without the consent of Tetra Pak be copied, transmitted or disclosed to any third party.
Tetra® Cap Applicator 47
Tetra Pak
H016
H014
H036
H017
H028
H031
H026
H032
H034
H023
H024
H035
H025
H030
H033
H015
H027
H029
H021
H022
H003
H002
H001
H012 H010 H06 H07 H08 H09 H011 H013
S15H
S01H
S05H
S03H
S02H
S07H
S001
S01H STEP UP
S02H STEP DOWN
S03H RESET/ LAMP TEST
S05H INCHING
S07H CHOICE CAP-NO CAP
S15H MANUAL LUBRICATION
H006 ALARM EMERGENCY STOP
H007 ALARM DOOR
H008 ALARM MOTOR PROTECTION
H009 ALARM AIR PRESSURE
H010 ALARM LUBRICATION
H011 ALARM CLUTCH, MAIN MOTOR
H012 ALARM ELECTRICAL CABINET
H013 ALARM FREQUENCY CONVERTER
H001 STEP 1
H002 STEP 2
H003 STEP 3
H014 ALARM FALLEN PACKAGE
H015 ALARM QUEUE OUTFEED
H016 ALARM HOT MELT UNIT
H017 ALARM NO PACKAGE TO INFEED
H021 CAP
H022 NO CAP
H023 ALARM JAMMED OUTFEED
H024 ALARM LOW PADDLE ELEVATOR
H025 ALARM LOW LEWEL MECHANICAL FEEDER
H026 ALARM NO CAP AT PUSHER POSITION
H027 ALARM CAP MISSING ON PACKAGE
H028 ALARM PUSHER "CAP INTO INDEX WHEEL"
H029 ALARM NOT READY DOWN STREAM
H030 ALARM DOOR OPEN MECHANICAL FEEDER
H031 ALARM LEAD RAIL
H032 ALARM CAP ON CARRIER BEFORE INDEX
H033 ALARM NO CAP FROM MECHANICAL FEEDER
H034 ALARM NO CAP QUEUE
H035 ALARM CAP CHUTE OPEN
H036 ALARM PREHEATER
Tetra Pak
Company
Tetra Pak Carton Ambient AB
Drawing remarks
Designer JNT
ECM No 135544
Date 06/03/03
Denomination MOUNTING DRAWING
Machine Tetra Cap Applicator 47
Page Type MOUNTING DRAWING
Document No. 2543127-0009
Doc. type ELD
Version AB
Page 007
EM1.1TH900617en.fm

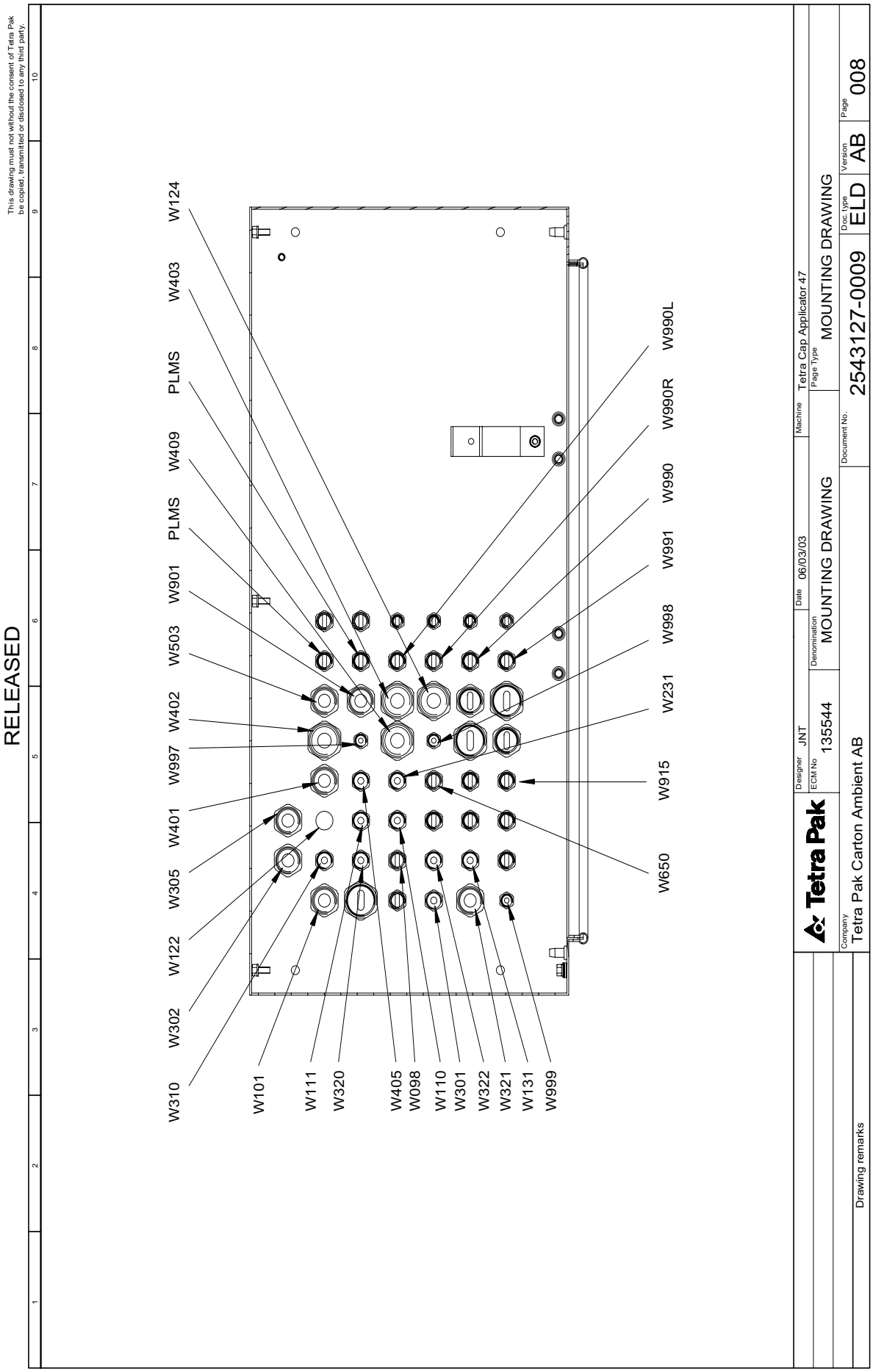

EM1.1TH900617en.fm

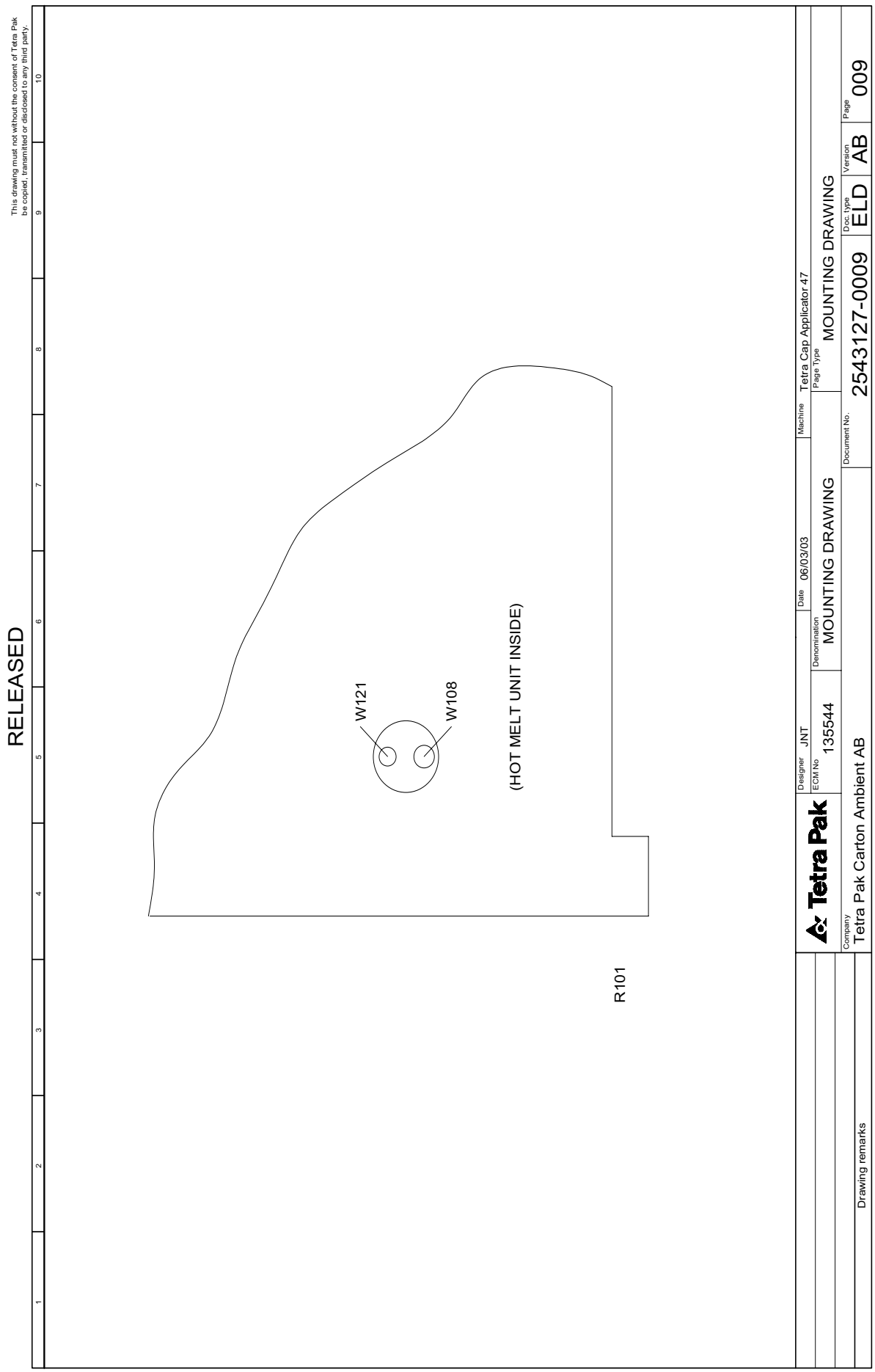

EM1.1TH900617en.fm

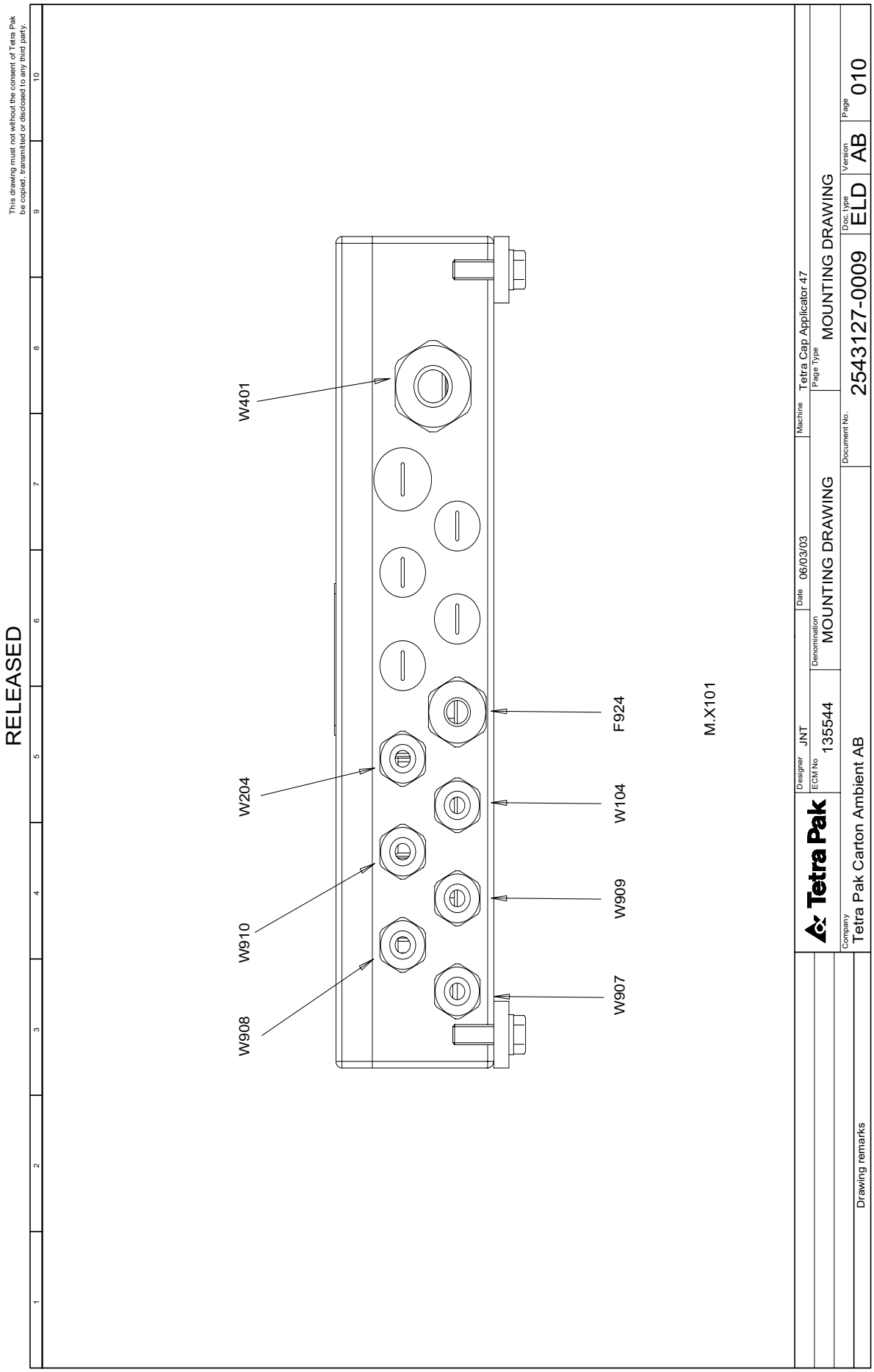

EM1.1TH900617en.fm

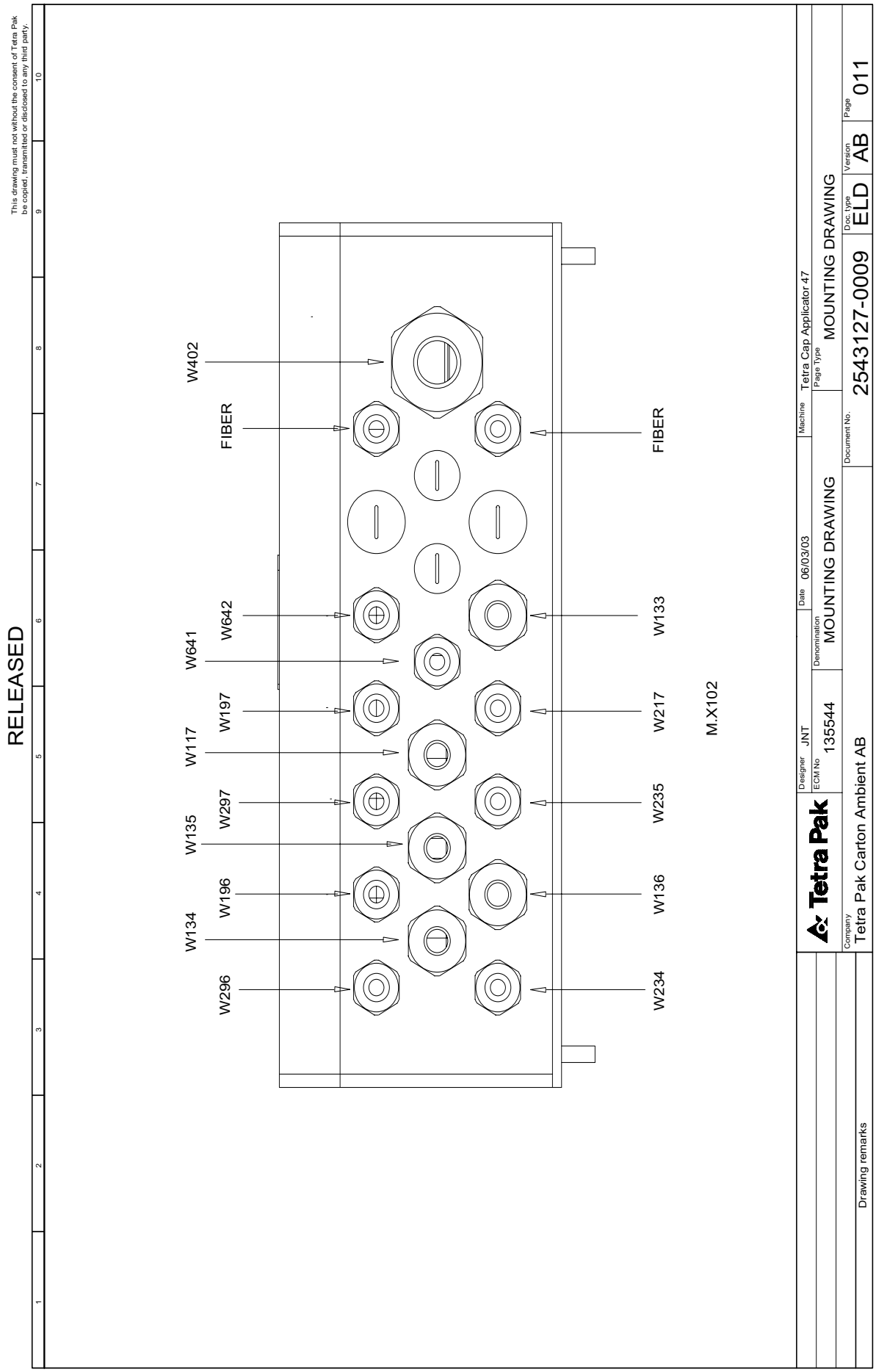

EM1.1TH900617en.fm

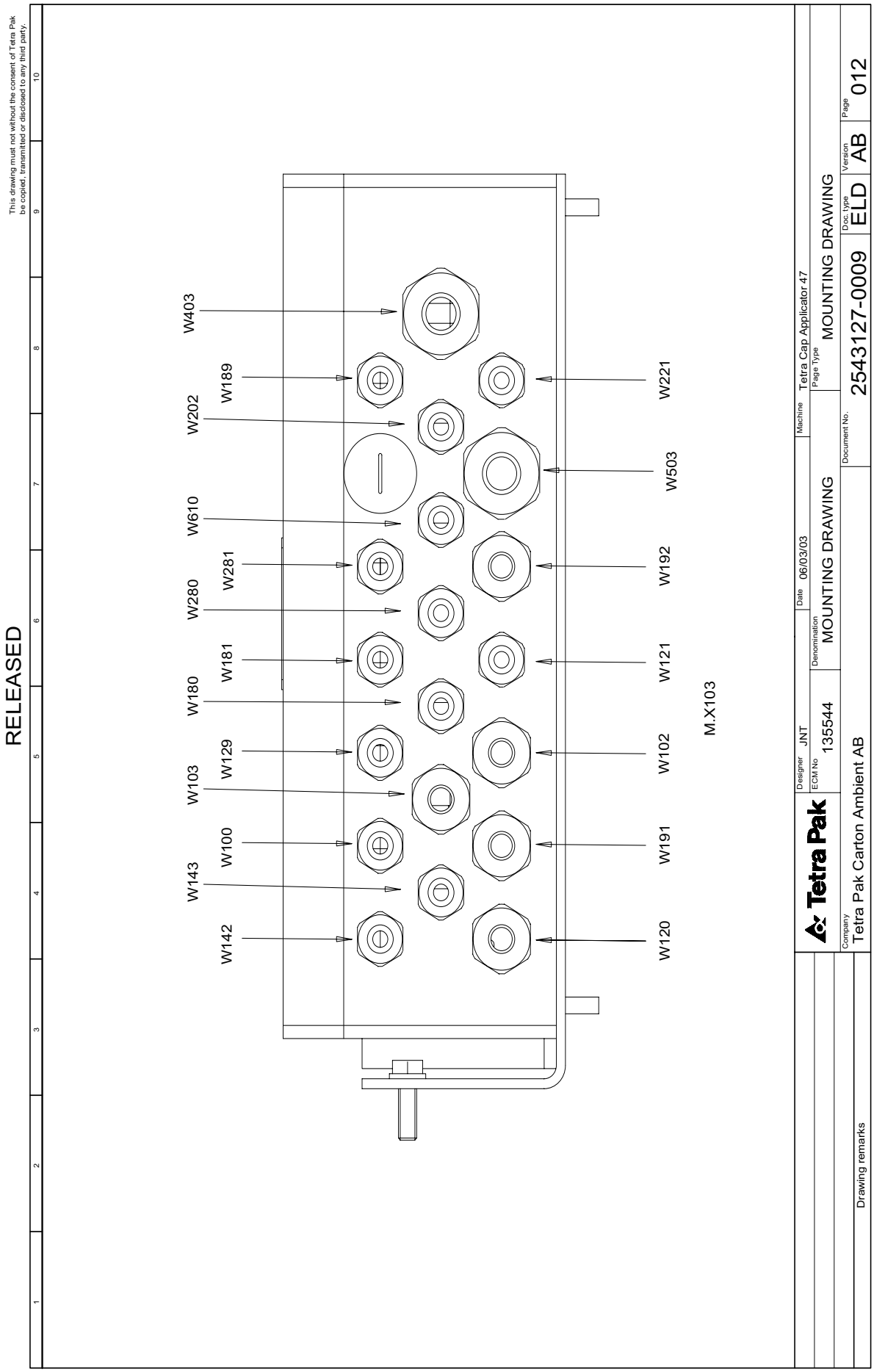

EM1.1TH900617en.fm

EM1.1TH900617en.fm

RELEASED

This drawing must not without the consent of Tetra Pak be copied, transmitted or disclosed to any third party.

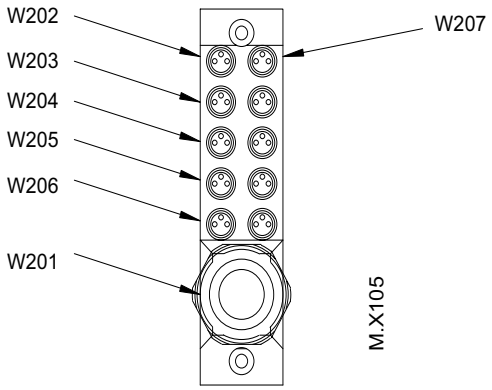

Tetra Pak	Designer JNT	Date 06/03/03	Machine Tetra Cap Applicator 47		
	ECM No 135544	Denomination MOUNTING DRAWING	Page Type MOUNTING DRAWING		
			Document No. 2543127-0009	Doc. type ELD	Version AB
Company Tetra Pak Carton Ambient AB					Page 013
Drawing remarks					

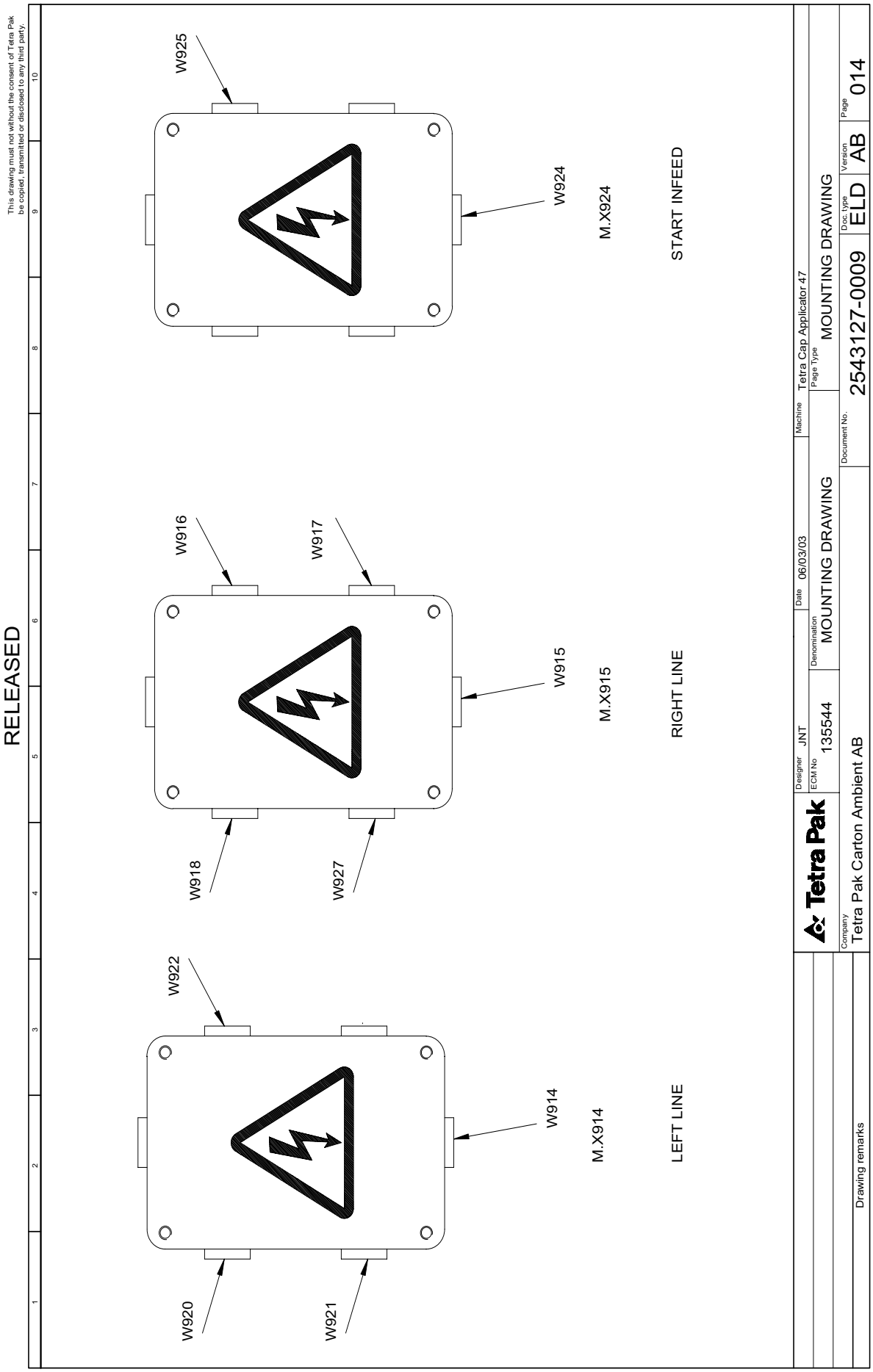

EM1.1TH900617en.fm

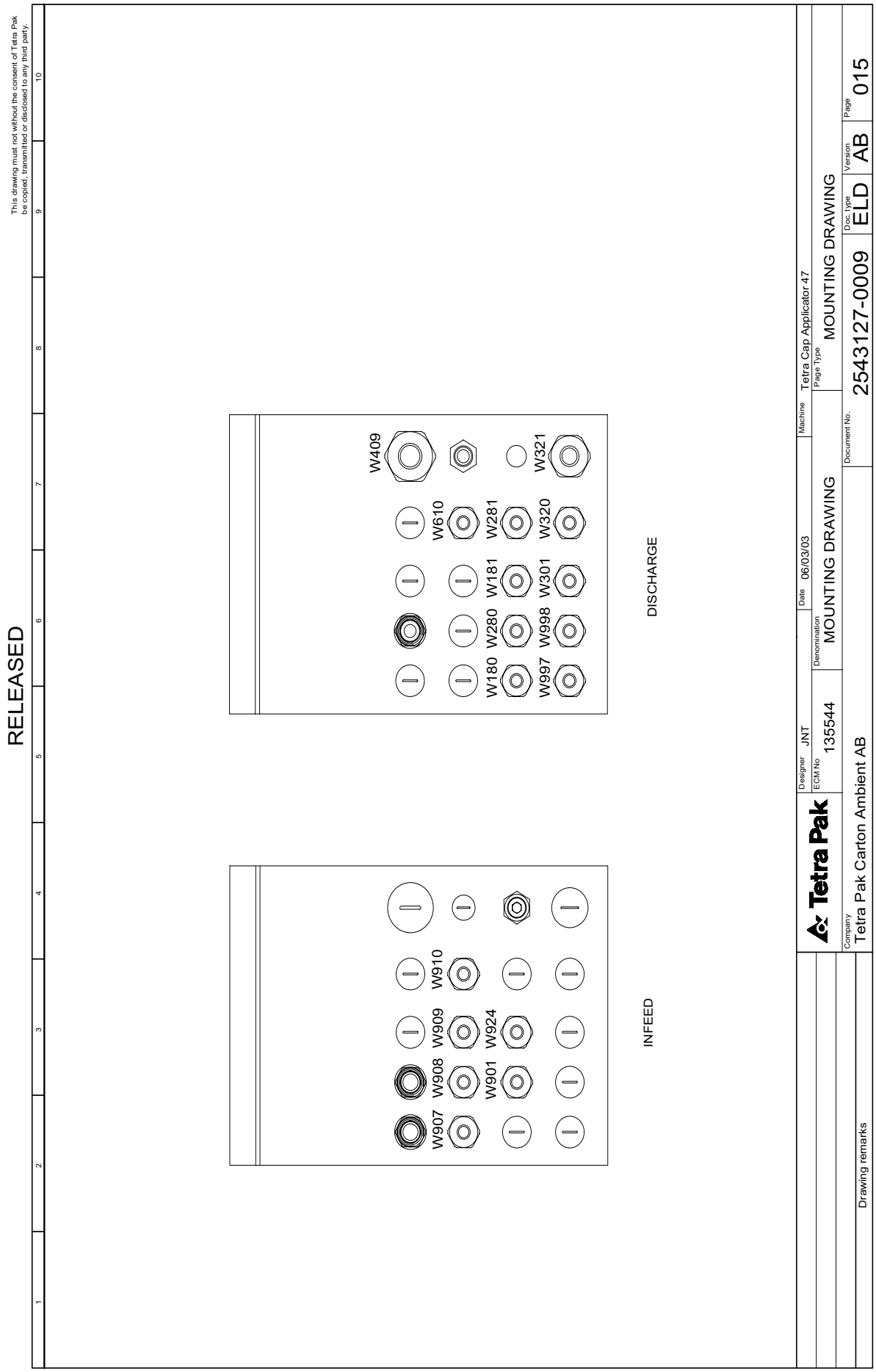
EM1.1TH900617en.fm
RELEASED
This drawing must not without the consent of Tetra Pak be copied, transmitted or disclosed to any third party.
W409
W610
W281
W321
W180
W280
W181
W997
W998
W301
W320
DISCHARGE
W910
W909
W924
W908
W901
W907
INFEED
Tetra Pak
Designer JNT
ECM No 135544
Date 06/03/03
Denomination MOUNTING DRAWING
Machine Tetra Cap Applicator 47
Page Type MOUNTING DRAWING
Document No. 2543127-0009
Doc. type ELD
Version AB
Page 015
Company Tetra Pak Carton Ambient AB
Drawing remarks

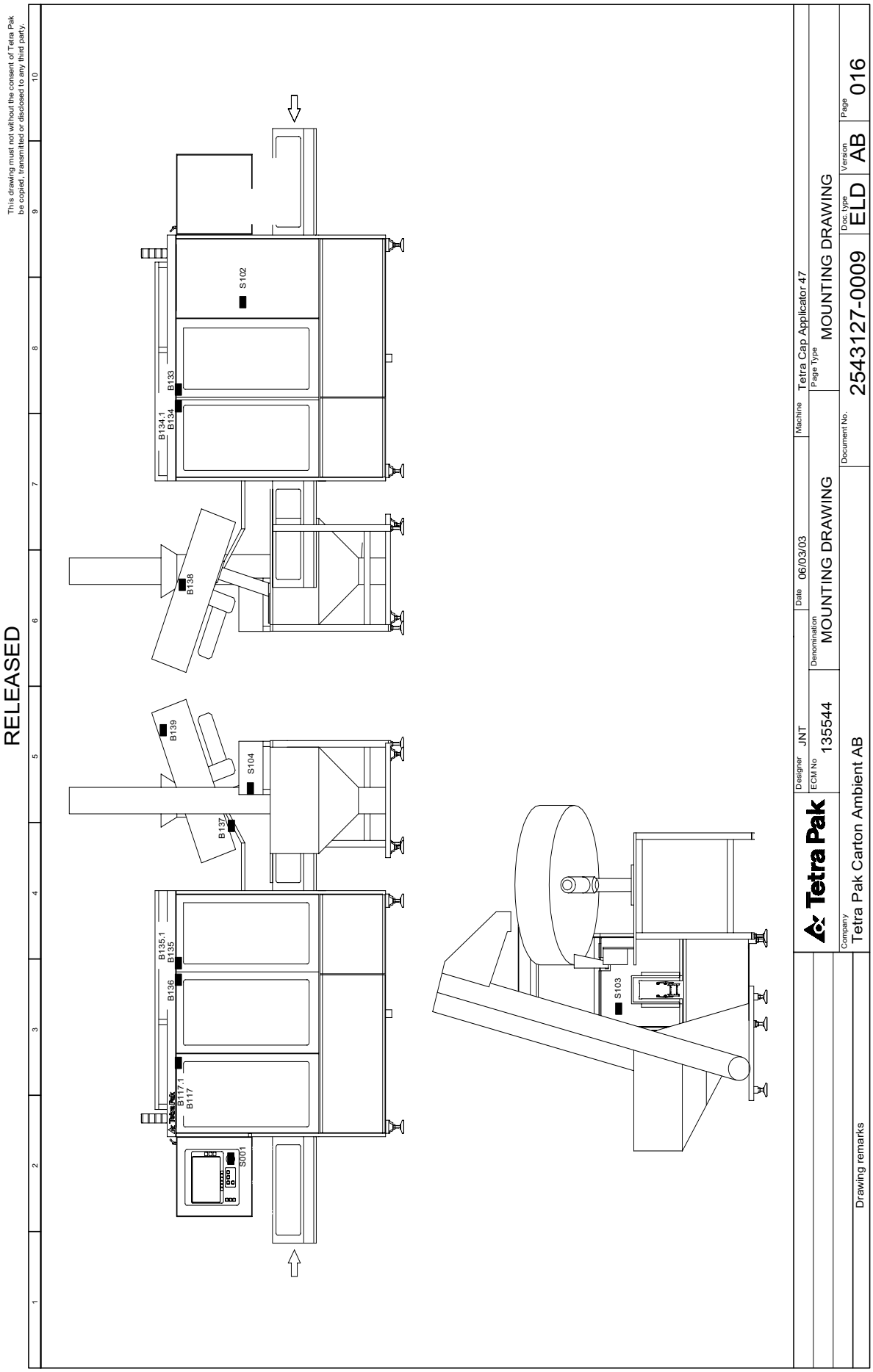

EM1.1TH900617en.fm

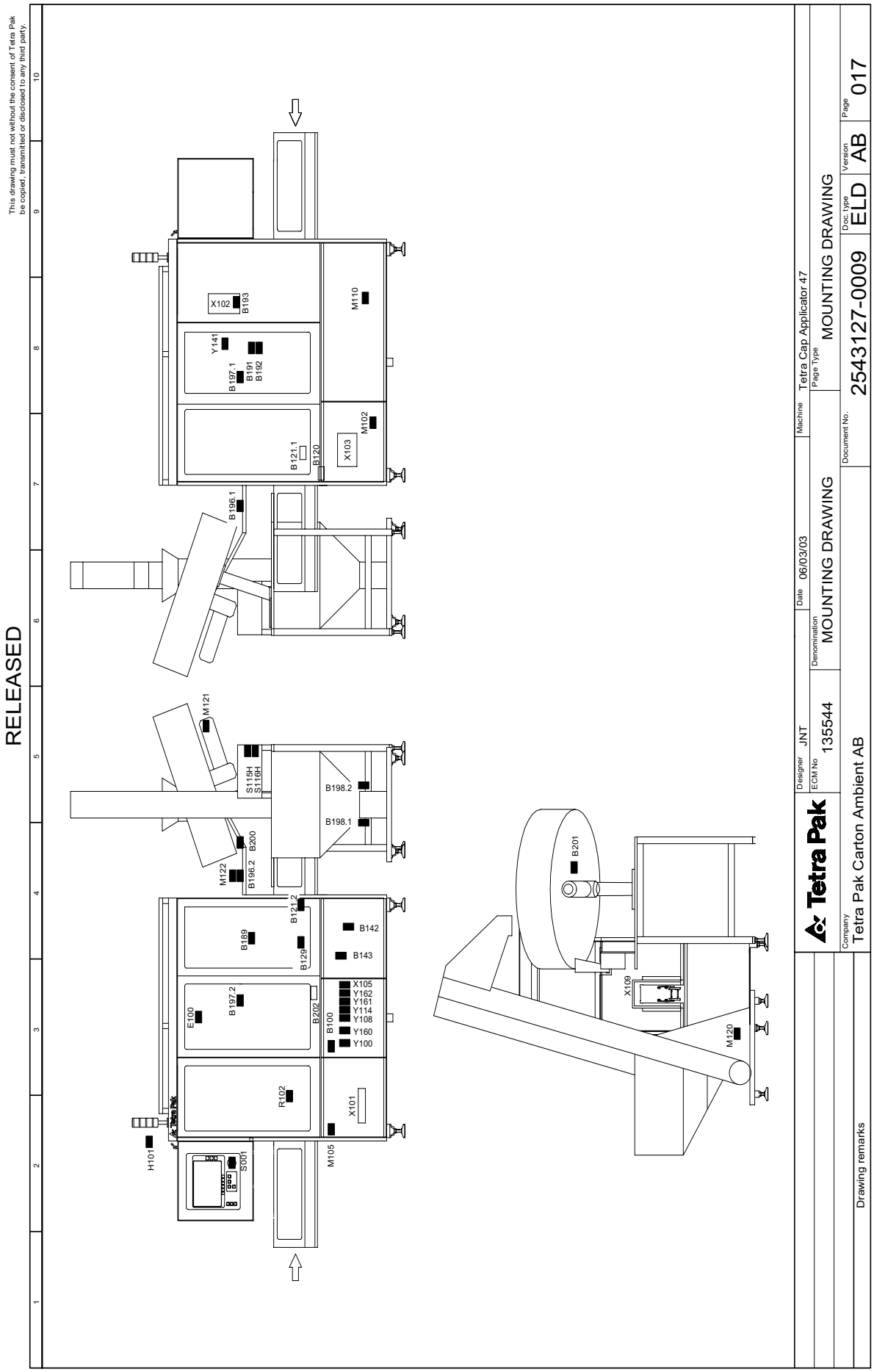

EM1.1TH900617en.fm

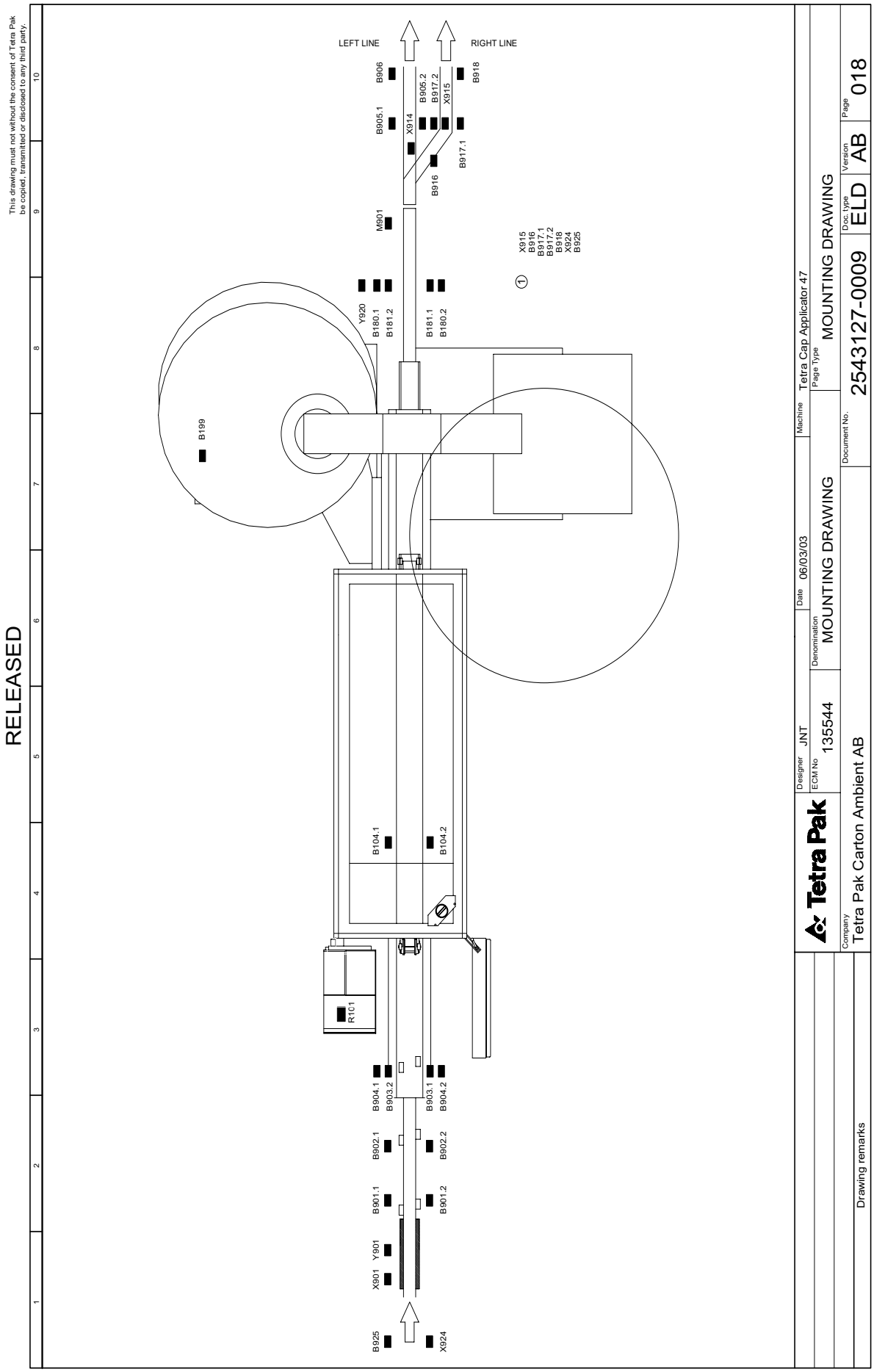

EM1.1TH900617en.fm

EM1.1TH900617en.fm

RELEASED

This drawing must not without the consent of Tetra Pak be copied, transmitted or disclosed to any third party.

2547723 AA

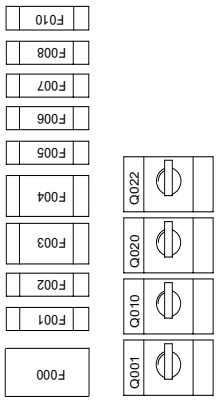

POS	FUNCTION	SETTING
Q001	INFEED CONVEYOR	1.2 A
Q010	FAN PREHEATING NOZZLE	1.5 A
Q020	PADDLE ELEVATOR	0.70 A
Q022	CAP CONVEYOR	0.5 A

POS	FUNCTION	
F001	WALL SOCKET, FAN IN CABINET	10 A
F002	FREQ. CONVERTER, MAIN MOTOR	10 A
F003	HOT MELT UNIT	10 A
F004	PREHEATING NOZZLE ELEMENT	10 A
F005	FREQ.CONVERTER, BELT BRAKE	10 A
F006	CONTROL VOLTAGE 24 VDC	6 A
F007	LIGHT IN MACHINE	6 A
F008	PLC, CONTROL VOLTAGE	6 A
F010	FREQ.CONVERTER, INFEEDER	10 A

TETRA CAP APPLICATOR 47

Tetra Pak

Designer JNT
ECM No 135544
Denomination MOUNTING DRAWING
Date 06/03/03
Machine Tetra Cap Applicator 47
Page Type MOUNTING DRAWING
Document No. 2543127-0009
Doc. type ELD
Version AB
Page 019
Company Tetra Pak Carton Ambient AB
Drawing remarks

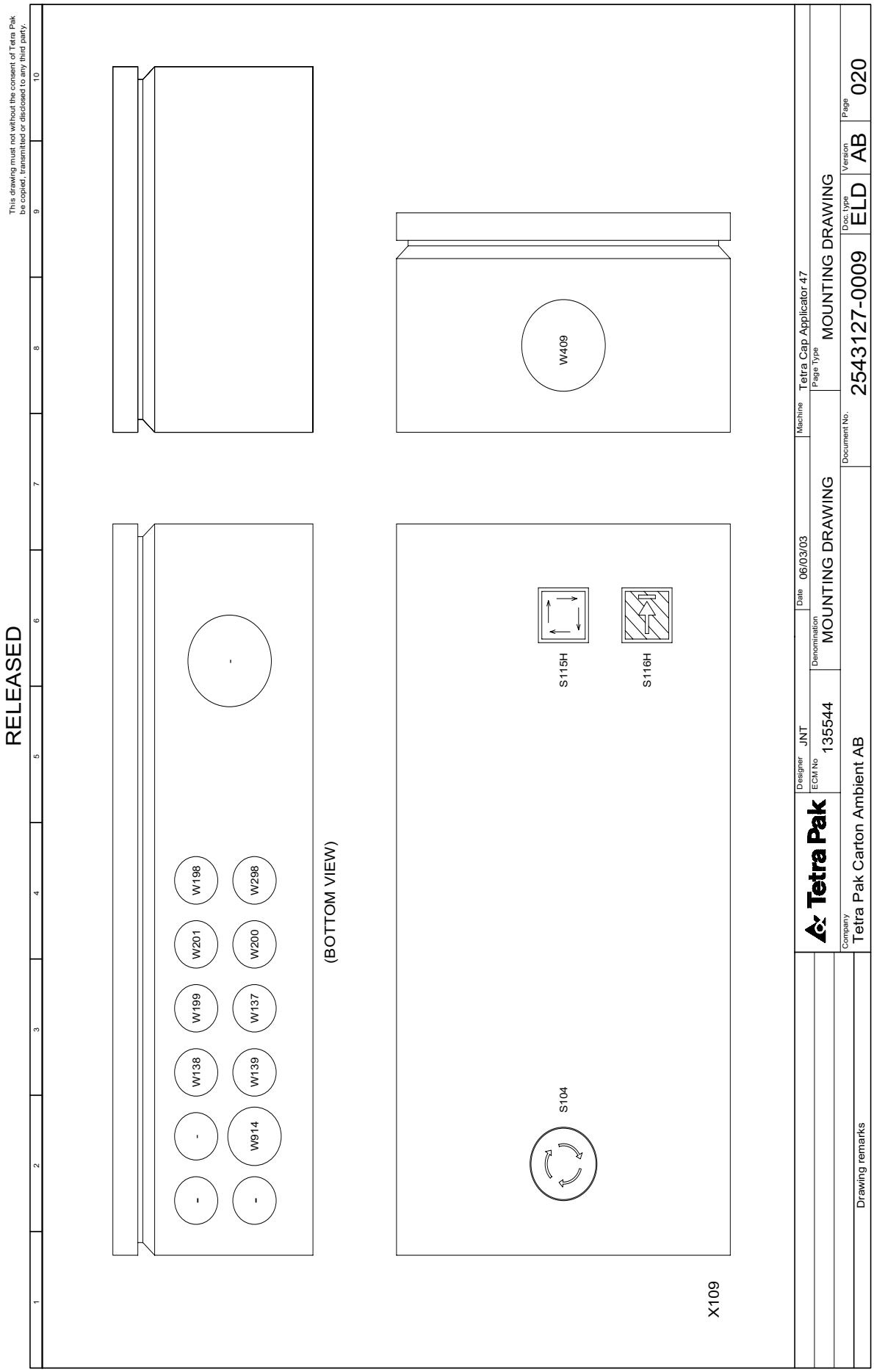

EM1.1TH900617en.fm

5 Document list

EM1.1TH900618en.fm

This page intentionally left blank

EM1.1TH900618en.fm

This drawing must not without the consent of Tetra Pak be copied, transmitted or disclosed to any third party.

RELEASED

EM1.1TH900618en.fm

Documents list

Drawing No	Page type	Denomination	Version
2543127-0001:001	DOCUMENT LIST	DOCUMENT LIST	AB
2543127-0001:002	DOCUMENT LIST	DOCUMENT LIST	AB
2543127-0001:003	DOCUMENT LIST	DOCUMENT LIST	AB
2543127-0002:001	POSITION SUMMARY	POSITION SUMMARY	AB
2543127-0002:002	POSITION SUMMARY	POSITION SUMMARY	AB
2543127-0003:001	CIRCUIT DIAGRAM	CIRCUIT DIAGRAM	AB
2543127-0003:002	CIRCUIT DIAGRAM	CIRCUIT DIAGRAM	AB
2543127-0003:003	CIRCUIT DIAGRAM	CIRCUIT DIAGRAM	AB
2543127-0003:004	CIRCUIT DIAGRAM	CIRCUIT DIAGRAM	AB
2543127-0003:005	CIRCUIT DIAGRAM	CIRCUIT DIAGRAM	AB
2543127-0003:006	CIRCUIT DIAGRAM	CIRCUIT DIAGRAM	AB
2543127-0003:007	CIRCUIT DIAGRAM	CIRCUIT DIAGRAM	AB
2543127-0003:008	CIRCUIT DIAGRAM	CIRCUIT DIAGRAM	AB
2543127-0003:009	CIRCUIT DIAGRAM	CIRCUIT DIAGRAM	AB
2543127-0003:010	CIRCUIT DIAGRAM	CIRCUIT DIAGRAM	AB
2543127-0003:011	CIRCUIT DIAGRAM	CIRCUIT DIAGRAM	AB
2543127-0003:012	CIRCUIT DIAGRAM	CIRCUIT DIAGRAM	AB
2543127-0003:013	CIRCUIT DIAGRAM	CIRCUIT DIAGRAM	AB
2543127-0003:014	CIRCUIT DIAGRAM	CIRCUIT DIAGRAM	AB
2543127-0003:015	CIRCUIT DIAGRAM	CIRCUIT DIAGRAM	AB
2543127-0003:016	CIRCUIT DIAGRAM	CIRCUIT DIAGRAM	AB
2543127-0003:017	CIRCUIT DIAGRAM	CIRCUIT DIAGRAM	AB
2543127-0003:018	CIRCUIT DIAGRAM	CIRCUIT DIAGRAM	AB
2543127-0003:019	CIRCUIT DIAGRAM	CIRCUIT DIAGRAM	AB
2543127-0003:020	CIRCUIT DIAGRAM	CIRCUIT DIAGRAM	AB
2543127-0003:021	CIRCUIT DIAGRAM	CIRCUIT DIAGRAM	AB
2543127-0003:022	CIRCUIT DIAGRAM	CIRCUIT DIAGRAM	AB
2543127-0003:023	CIRCUIT DIAGRAM	CIRCUIT DIAGRAM	AB
2543127-0003:024	CIRCUIT DIAGRAM	CIRCUIT DIAGRAM	AB
2543127-0003:025	CIRCUIT DIAGRAM	CIRCUIT DIAGRAM	AB
2543127-0003:026	CIRCUIT DIAGRAM	CIRCUIT DIAGRAM	AB
2543127-0003:027	CIRCUIT DIAGRAM	CIRCUIT DIAGRAM	AB
2543127-0003:028	CIRCUIT DIAGRAM	CIRCUIT DIAGRAM	AB
2543127-0003:029	CIRCUIT DIAGRAM	CIRCUIT DIAGRAM	AB
2543127-0003:030	CIRCUIT DIAGRAM	CIRCUIT DIAGRAM	AB
2543127-0003:031	CIRCUIT DIAGRAM	CIRCUIT DIAGRAM	AB
2543127-0003:032	CIRCUIT DIAGRAM	CIRCUIT DIAGRAM	AB
2543127-0003:033	CIRCUIT DIAGRAM	CIRCUIT DIAGRAM	AB
2543127-0003:034	CIRCUIT DIAGRAM	CIRCUIT DIAGRAM	AB
2543127-0003:035	CIRCUIT DIAGRAM	CIRCUIT DIAGRAM	AB
2543127-0003:036	CIRCUIT DIAGRAM	CIRCUIT DIAGRAM	AB
2543127-0003:037	CIRCUIT DIAGRAM	CIRCUIT DIAGRAM	AB
2543127-0003:038	CIRCUIT DIAGRAM	CIRCUIT DIAGRAM	AB
2543127-0003:039	CIRCUIT DIAGRAM	CIRCUIT DIAGRAM	AB
2543127-0003:040	CIRCUIT DIAGRAM	CIRCUIT DIAGRAM	AB
2543127-0003:041	CIRCUIT DIAGRAM	CIRCUIT DIAGRAM	AB

Tetra Pak
Designer JNT
ECM No 135544
Date 06/03/03
Machine Tetra Cap Applicator 47
Denomination DOCUMENT LIST
Page Type DOCUMENT LIST
Company Tetra Pak Carton Ambient AB
Document No. 2543127-0001
Doc. type ELD
Version AB
Page 001
Drawing remarks

This drawing must not without the consent of Tetra Pak be copied, transmitted or disclosed to any third party.

RELEASED

Documents list

Drawing No	Page type	Denomination	Version
2543127-0003:042	CIRCUIT DIAGRAM	CIRCUIT DIAGRAM	AB
2543127-0004:001	LINE SUMMARY	LINE SUMMARY	AB
2543127-0004:002	LINE SUMMARY	LINE SUMMARY	AB
2543127-0004:003	LINE SUMMARY	LINE SUMMARY	AB
2543127-0005:001	CABINET TERMINAL SUMMARY	CABINET TERMINAL SUMMARY	AB
2543127-0005:002	CABINET TERMINAL SUMMARY	CABINET TERMINAL SUMMARY	AB
2543127-0005:003	CABINET TERMINAL SUMMARY	CABINET TERMINAL SUMMARY	AB
2543127-0006:001	TERMINAL STRIP OVERVIEW	TERMINAL STRIP OVERVIEW	AB
2543127-0006:002	TERMINAL STRIP OVERVIEW	TERMINAL STRIP OVERVIEW	AB
2543127-0006:003	TERMINAL STRIP OVERVIEW	TERMINAL STRIP OVERVIEW	AB
2543127-0006:004	TERMINAL STRIP OVERVIEW	TERMINAL STRIP OVERVIEW	AB
2543127-0006:005	TERMINAL STRIP OVERVIEW	TERMINAL STRIP OVERVIEW	AB
2543127-0006:006	TERMINAL STRIP OVERVIEW	TERMINAL STRIP OVERVIEW	AB
2543127-0006:007	TERMINAL STRIP OVERVIEW	TERMINAL STRIP OVERVIEW	AB
2543127-0006:008	TERMINAL STRIP OVERVIEW	TERMINAL STRIP OVERVIEW	AB
2543127-0006:009	TERMINAL STRIP OVERVIEW	TERMINAL STRIP OVERVIEW	AB
2543127-0006:010	TERMINAL STRIP OVERVIEW	TERMINAL STRIP OVERVIEW	AB
2543127-0006:011	TERMINAL STRIP OVERVIEW	TERMINAL STRIP OVERVIEW	AB
2543127-0006:012	TERMINAL STRIP OVERVIEW	TERMINAL STRIP OVERVIEW	AB
2543127-0006:013	TERMINAL STRIP OVERVIEW	TERMINAL STRIP OVERVIEW	AB
2543127-0006:014	TERMINAL STRIP OVERVIEW	TERMINAL STRIP OVERVIEW	AB
2543127-0007:001	CABLE CONNECTION LIST	CABLE CONNECTION LIST	AB
2543127-0007:002	CABLE CONNECTION LIST	CABLE CONNECTION LIST	AB
2543127-0007:003	CABLE CONNECTION LIST	CABLE CONNECTION LIST	AB
2543127-0007:004	CABLE CONNECTION LIST	CABLE CONNECTION LIST	AB
2543127-0007:005	CABLE CONNECTION LIST	CABLE CONNECTION LIST	AB
2543127-0007:006	CABLE CONNECTION LIST	CABLE CONNECTION LIST	AB
2543127-0007:007	CABLE CONNECTION LIST	CABLE CONNECTION LIST	AB
2543127-0007:008	CABLE CONNECTION LIST	CABLE CONNECTION LIST	AB
2543127-0007:009	CABLE CONNECTION LIST	CABLE CONNECTION LIST	AB
2543127-0008:001	MAINSCONNECTION	MAINSCONNECTION	AB
2543127-0008:002	MAINSCONNECTION	MAINSCONNECTION	AB
2543127-0009:001	MOUNTING DRAWING	MOUNTING DRAWING	AB
2543127-0009:002	MOUNTING DRAWING	MOUNTING DRAWING	AB
2543127-0009:003	MOUNTING DRAWING	MOUNTING DRAWING	AB
2543127-0009:004	MOUNTING DRAWING	MOUNTING DRAWING	AB
2543127-0009:005	MOUNTING DRAWING	MOUNTING DRAWING	AB
2543127-0009:006	MOUNTING DRAWING	MOUNTING DRAWING	AB
2543127-0009:007	MOUNTING DRAWING	MOUNTING DRAWING	AB
2543127-0009:008	MOUNTING DRAWING	MOUNTING DRAWING	AB
2543127-0009:009	MOUNTING DRAWING	MOUNTING DRAWING	AB
2543127-0009:010	MOUNTING DRAWING	MOUNTING DRAWING	AB
2543127-0009:011	MOUNTING DRAWING	MOUNTING DRAWING	AB
2543127-0009:012	MOUNTING DRAWING	MOUNTING DRAWING	AB
2543127-0009:013	MOUNTING DRAWING	MOUNTING DRAWING	AB
2543127-0009:014	MOUNTING DRAWING	MOUNTING DRAWING	AB

Tetra Pak
Designer JNT
ECM No 135544
Date 06/03/03
Denomination DOCUMENT LIST
Machine Tetra Cap Applicator 47
Page Type DOCUMENT LIST
Company Tetra Pak Carton Ambient AB
Document No. 2543127-0001
Doc. type ELD
Version AB
Page 002
Drawing remarks

EM1.1TH900618en.fm

This drawing must not without the consent of Tetra Pak be copied, transmitted or disclosed to any third party.

RELEASED

Documents list

Drawing No	Page type	Denomination	Version
2543127-0009:015	MOUNTING DRAWING	MOUNTING DRAWING	AB
2543127-0009:016	MOUNTING DRAWING	MOUNTING DRAWING	AB
2543127-0009:017	MOUNTING DRAWING	MOUNTING DRAWING	AB
2543127-0009:018	MOUNTING DRAWING	MOUNTING DRAWING	AB
2543127-0009:019	MOUNTING DRAWING	MOUNTING DRAWING	AB
2543127-0009:020	MOUNTING DRAWING	MOUNTING DRAWING	AB

Tetra Pak

Designer JNT
ECM No 135544
Date 06/03/03
Machine Tetra Cap Applicator 47
Denomination DOCUMENT LIST
Page Type DOCUMENT LIST
Company Tetra Pak Carton Ambient AB
Document No. 2543127-0001
Doc. type ELD
Version AB
Page 003
Drawing remarks

EM1.1TH900618en.fm

This page intentionally left blank

EM1.1TH900618en.fm

6 Position summary

EM1.1TH900619en.fm

This page intentionally left blank

EM1.1TH900619en.fm

RELEASED

This drawing must not without the consent of Tetra Pak be copied, transmitted or disclosed to any third party.

1 2 3 4 5 6 7 8 9 10

Position summary of 2543127-0003

Component	Page .Col.	Opt.
+C- X007	004 .7	
+C-A002	021 .7	
+C-A003	023 .7	
+C-A004	025 .7	
+C-A005	027 .1	
+C-A006	029 .1	
+C-A007	031 .1	
+C-A008	033 .7	
+C-A009	035 .1	
+C-A052	010 .5	
+C-A053	011 .5	
+C-A054	012 .5	
+C-A060	003 .6	
+P-A071	019 .4	
+P-A072	037 .4	
+C-A080	017 .4	
+C-A081	017 .4	
+M-B100	020 .3	
+M-B104.1	023 .4	
+M-B104.2	023 .5	
+M-B117	014 .6	
+M-B117.1	030 .5	
+M-B120	022 .2	
+M-B121.1	024 .3	
+M-B121.2	024 .5	
+M-B129	023 .5	
+M-B133	014 .9	
+M-B134	014 .7	

Component	Page .Col.	Opt.
+M-B134.1	030 .4	
+M-B135	014 .4	
+M-B135.1	030 .4	
+M-B136	014 .2	
+M-B137	014 .3	
+M-B138	014 .5	
+M-B139	014 .7	
+M-B142	024 .4	
+M-B143	024 .3	
+M-B180.1	024 .3	
+M-B180.2	024 .5	
+M-B181.1	024 .3	
+M-B181.2	024 .5	
+M-B189	023 .5	
+M-B191	025 .4	
+M-B192	025 .4	
+M-B193	025 .3	
+M-B196.1	025 .3	
+M-B196.2	025 .5	
+M-B197.1	025 .3	
+M-B197.2	025 .5	
+M-B198.1	024 .3	
+M-B198.2	024 .5	
+M-B199	024 .4	
+M-B200	032 .4	
+M-B201	032 .4	
+M-B202	032 .4	
+M-B901.1	021 .4	

Component	Page .Col.	Opt.
+M-B901.2	021 .5	
+M-B902.1	021 .4	
+M-B902.2	021 .5	
+M-B903.1	023 .4	
+M-B903.2	023 .5	
+M-B904.1	023 .4	
+M-B904.2	023 .5	
+M-B905.1	024 .4	
+M-B905.2	024 .5	
+M-B906	033 .4	
+M-B916	033 .4	
+M-B917.1	033 .4	
+M-B917.2	033 .4	
+M-B918	033 .4	
+M-B925	023 .4	
+C-D001	003 .6	
+C-D.S. MACHINE	016 .6	
+M-E100	005 .2	
+C-F000	003 .4	
+C-F001	004 .5	
+C-F002	007 .3	
+C-F003	005 .4	
+C-F004	005 .7	
+C-F005	007 .7	
+C-F006	003 .9	
+C-F007	005 .2	
+C-F008	003 .6	
+C-F010	009 .4	

Component	Page .Col.	Opt.
+C-G001	003 .6	
+C-G002	007 .2	
+C-G005	007 .7	
+C-G010	009 .4	
+C-G011	003 .9	
+P-H001	037 .6	
+P-H001S	039 .6	
+P-H002	037 .6	
+P-H002S	039 .6	
+P-H003	037 .6	
+P-H003S	039 .6	
+P-H004S	039 .6	
+P-H005S	039 .6	
+P-H006	039 .6	
+P-H006S	039 .6	
+P-H007	039 .6	
+P-H008	039 .6	
+P-H009	039 .6	
+P-H010	039 .6	
+P-H011	039 .6	
+P-H012	041 .7	
+P-H013	041 .7	
+P-H014	037 .6	
+P-H015	037 .6	
+P-H016	037 .6	
+P-H017	037 .6	
+P-H018	037 .6	
+P-H021	038 .6	

Drawing remarks

Tetra Pak	Designer JNT	Date 06/03/03	Machine Tetra Cap Applicator 47		
	ECM No 135544	Denomination POSITION SUMMARY	Page Type POSITION SUMMARY		
	Company Tetra Pak Carton Ambient AB	Document No. 2543127-0002	Doc. type ELD	Version AB	Page 001

RELEASED

This drawing must not without the consent of Tetra Pak be copied, transmitted or disclosed to any third party.

1 2 3 4 5 6 7 8 9 10

Position summary of 2543127-0003

Component	Page .Col.	Opt.
+P-H022	038 .6	
+P-H023	038 .6	
+P-H024	038 .6	
+P-H025	038 .6	
+P-H026	038 .6	
+P-H027	038 .6	
+P-H028	038 .6	
+P-H029	040 .7	
+P-H030	040 .7	
+P-H031	040 .7	
+P-H032	040 .7	
+P-H033	040 .7	
+P-H034	040 .7	
+P-H035	040 .7	
+P-H036	040 .7	
+M-H101	031 .4	
+M-H115S	031 .5	
+M-H116S	030 .5	
+C-K001	028 .5	
+C-K002	028 .5	
+C-K003	027 .5	
+C-K004	028 .5	
+C-K006	030 .5	
+C-K010	030 .5	
+C-K018	015 .4	
+C-K019	030 .5	
+C-K020	027 .5	
+C-K022	028 .5	

Component	Page .Col.	Opt.
+C-K052	010 .7	
+C-K052.1	010 .7	
+C-K053	011 .7	
+C-K053.1	011 .7	
+C-K054	012 .7	
+C-K054.1	012 .7	
+C-K089	034 .4	
+C-K098	029 .5	
+C-K099	030 .5	
+C-M002	004 .6	
+M-M102	007 .5	
+M-M105	007 .9	
+M-M110	004 .3	
+M-M120	009 .9	
+M-M121	009 .6	
+M-M122	008 .7	
+M-M901	008 .3	
+C-P001	029 .5	
+C-Q000	003 .2	
+C-Q001	008 .3	
+C-Q010	004 .3	
+C-Q020	009 .9	
+C-Q022	008 .7	
+C-Q070	004 .7	
+M-R101	005 .4	
+M-R102	005 .7	
+C-READY SIGNAL	016 .6	
+P-S001	013 .5	

Component	Page .Col.	Opt.
+P-S001H	018 .3	
+P-S002H	018 .3	
+P-S003H	018 .3	
+P-S004H	018 .3	
+P-S005H	018 .3	
+P-S006H	018 .3	
+P-S007H	018 .3	
+P-S008H	019 .3	
+P-S009H	019 .3	
+P-S010H	019 .3	
+P-S011H	019 .3	
+P-S012H	019 .3	
+P-S013H	019 .3	
+P-S014H	019 .3	
+P-S015H	019 .3	
+C-S018	015 .2	
+M-S102	013 .3	
+M-S103	013 .5	
+M-S104	013 .3	
+M-S115H	021 .4	
+M-S116H	032 .4	
+C-U.S. MACHINE	016 .6	
+M-Y100	026 .4	
+M-Y108	026 .4	
+M-Y114	029 .5	
+M-Y141	026 .4	
+M-Y142	026 .4	
+M-Y160	026 .4	

Component	Page .Col.	Opt.
+M-Y161	026 .4	
+M-Y162	026 .4	
+M-Y901	030 .5	
+M-Y920	029 .5	
+M-Y950	015 .4	
+C-Z001	007 .3	
+C-Z002	007 .1	
+C-Z003	007 .7	
+C-Z004	007 .6	
+C-Z010	009 .4	
+C-Z011	009 .2	

Drawing remarks

Tetra Pak

Designer	Date	Machine
JNT	06/03/03	Tetra Cap Applicator 47

ECM No	Denomination	Page Type
135544	POSITION SUMMARY	POSITION SUMMARY

Company	Document No.	Doc. type	Version	Page
Tetra Pak Carton Ambient AB	2543127-0002	ELD	AB	002

7 Circuit diagrams

EM1.1TH900620en.fm

This page intentionally left blank

EM1.1TH900620en.fm

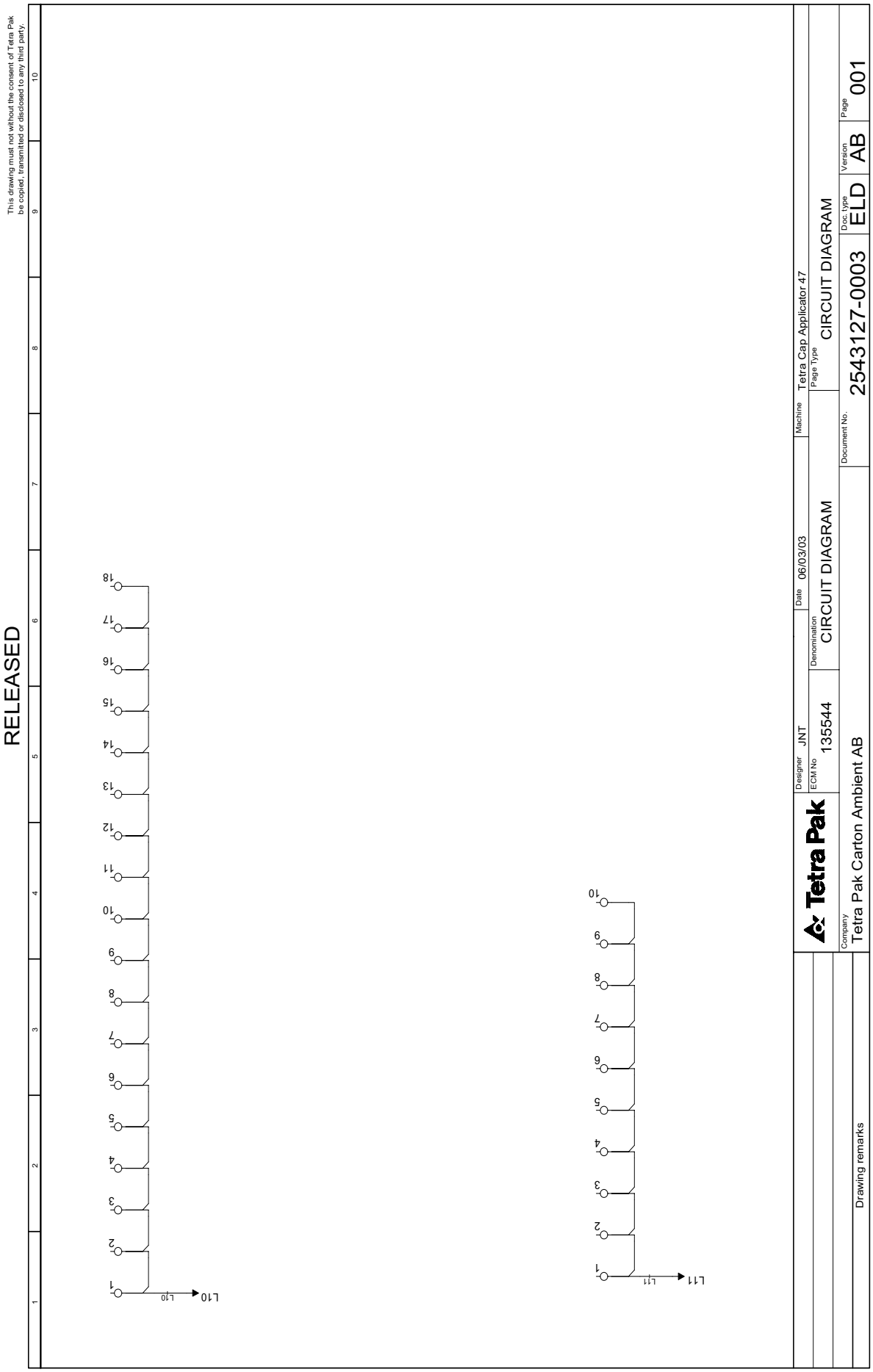

EM1.1TH900620en.fm

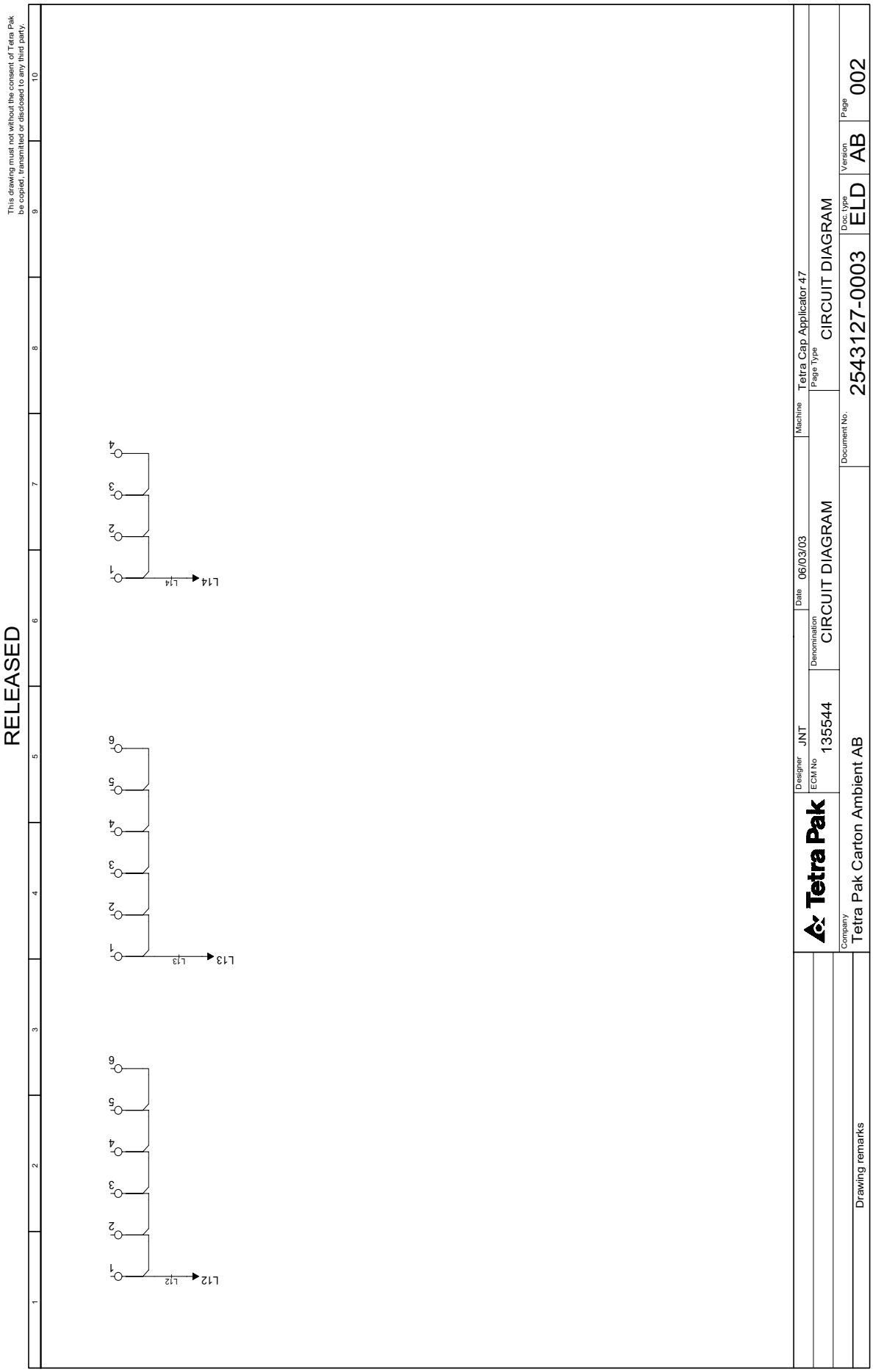

EM1.1TH900620en.fm

EM1.1TH900620en.fm

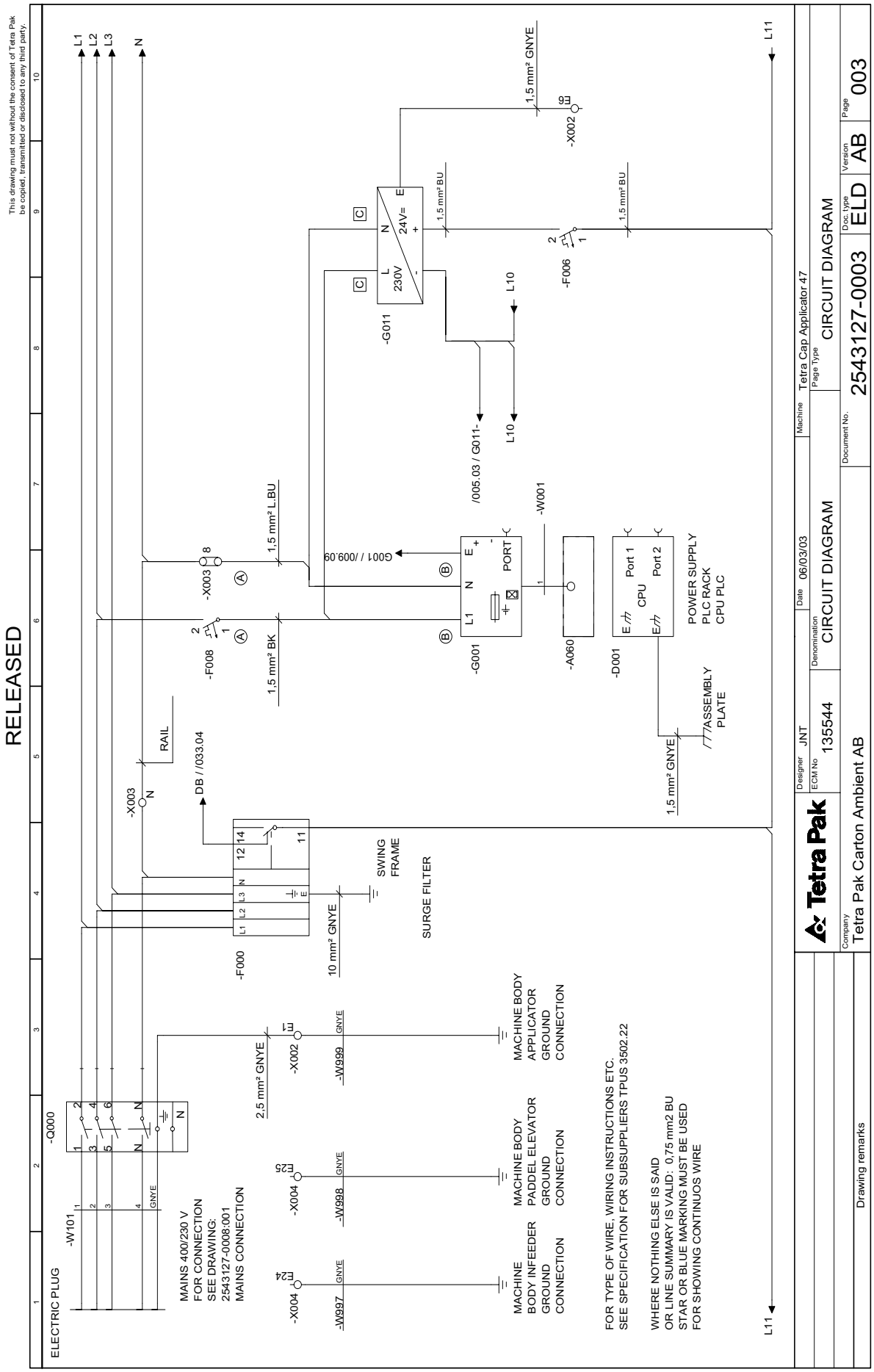

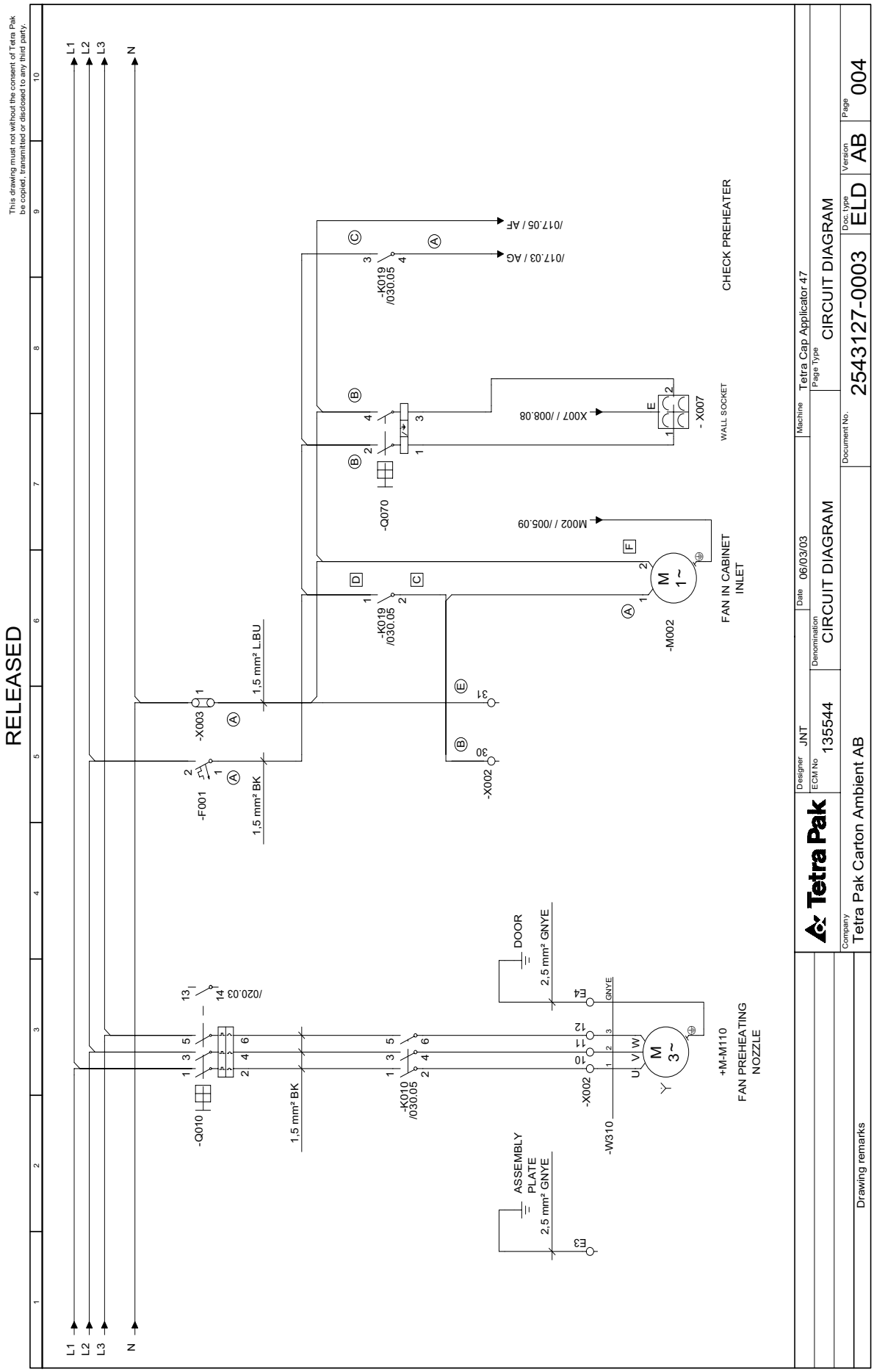

EM1.1TH900620en.fm

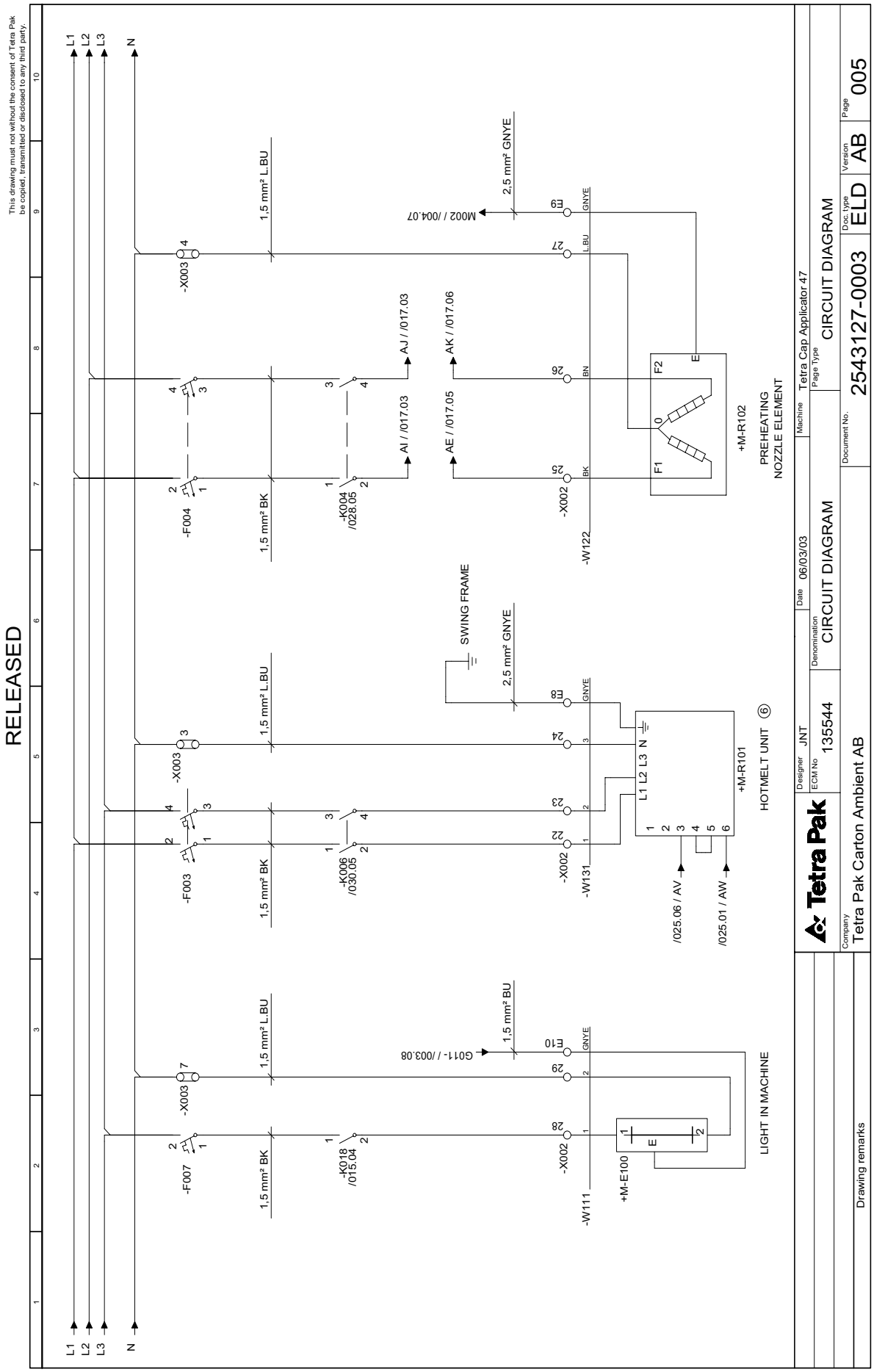
RELEASED
This drawing must not without the consent of Tetra Pak be copied, transmitted or disclosed to any third party.
L1
L2
L3
N
-X003
-F004
-F003
-F007
1,5 mm² L.BU
1,5 mm² BK
1,5 mm² BU
-K004 /028.05
-K006 /030.05
-K018 /015.04
AJ / /017.03
AI / /017.03
AK / /017.06
AE / /017.05
M002 / /004.07
G011- / /003.08
2,5 mm² GNYE
SWING FRAME
-X002
-W122
-W131
-W111
+M-R102
PREHEATING NOZZLE ELEMENT
+M-R101
HOTMELT UNIT ⑥
/025.06 / AV
/025.01 / AW
+M-E100
LIGHT IN MACHINE
Tetra Pak
Designer JNT
ECM No 135544
Date 06/03/03
Machine Tetra Cap Applicator 47
Page Type
Denomination CIRCUIT DIAGRAM
Company Tetra Pak Carton Ambient AB
Document No. 2543127-0003
Doc. type ELD
Version AB
Page 005
Drawing remarks
EM1.1TH900620en.fm

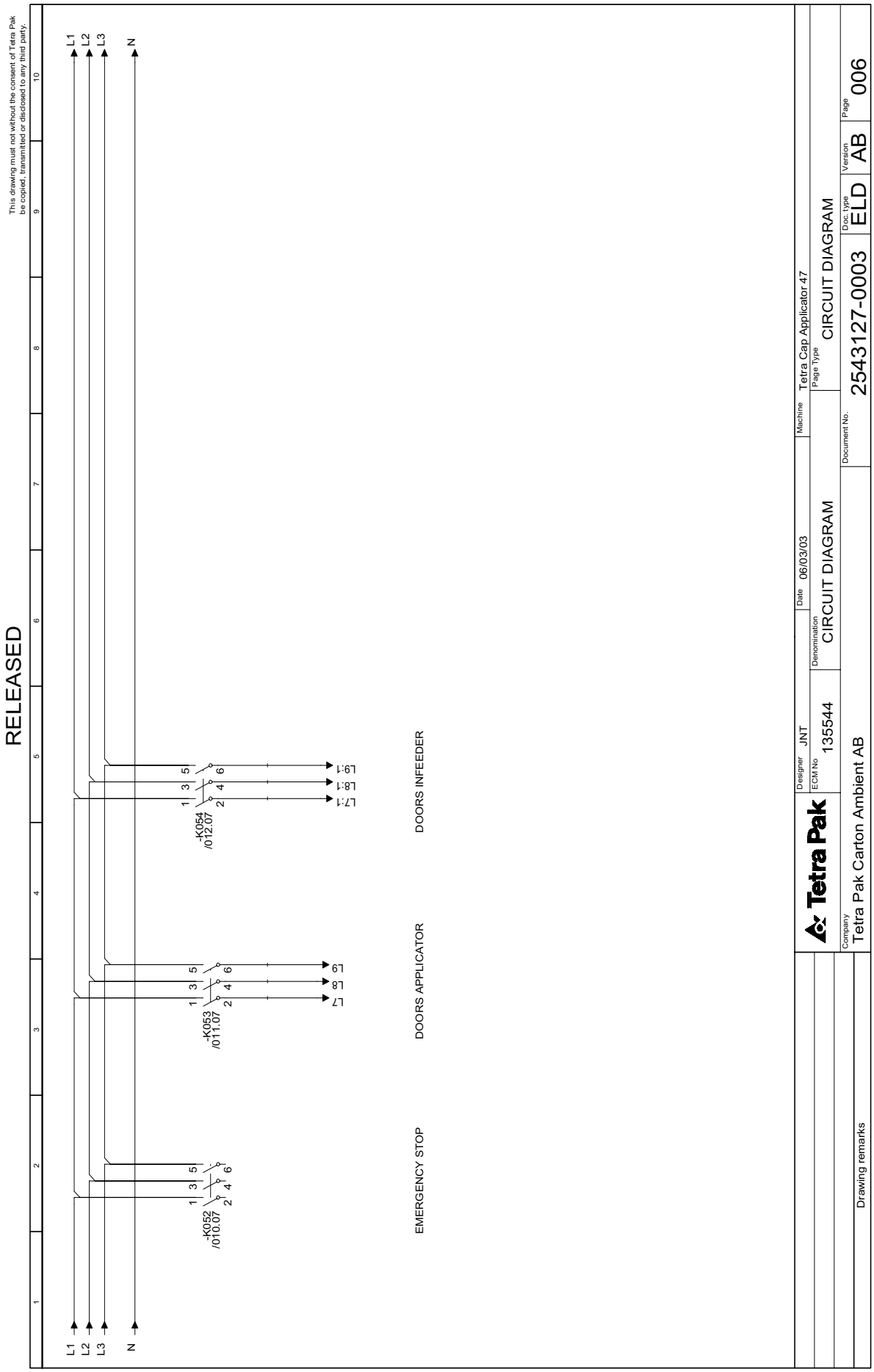

EM1.1TH900620en.fm

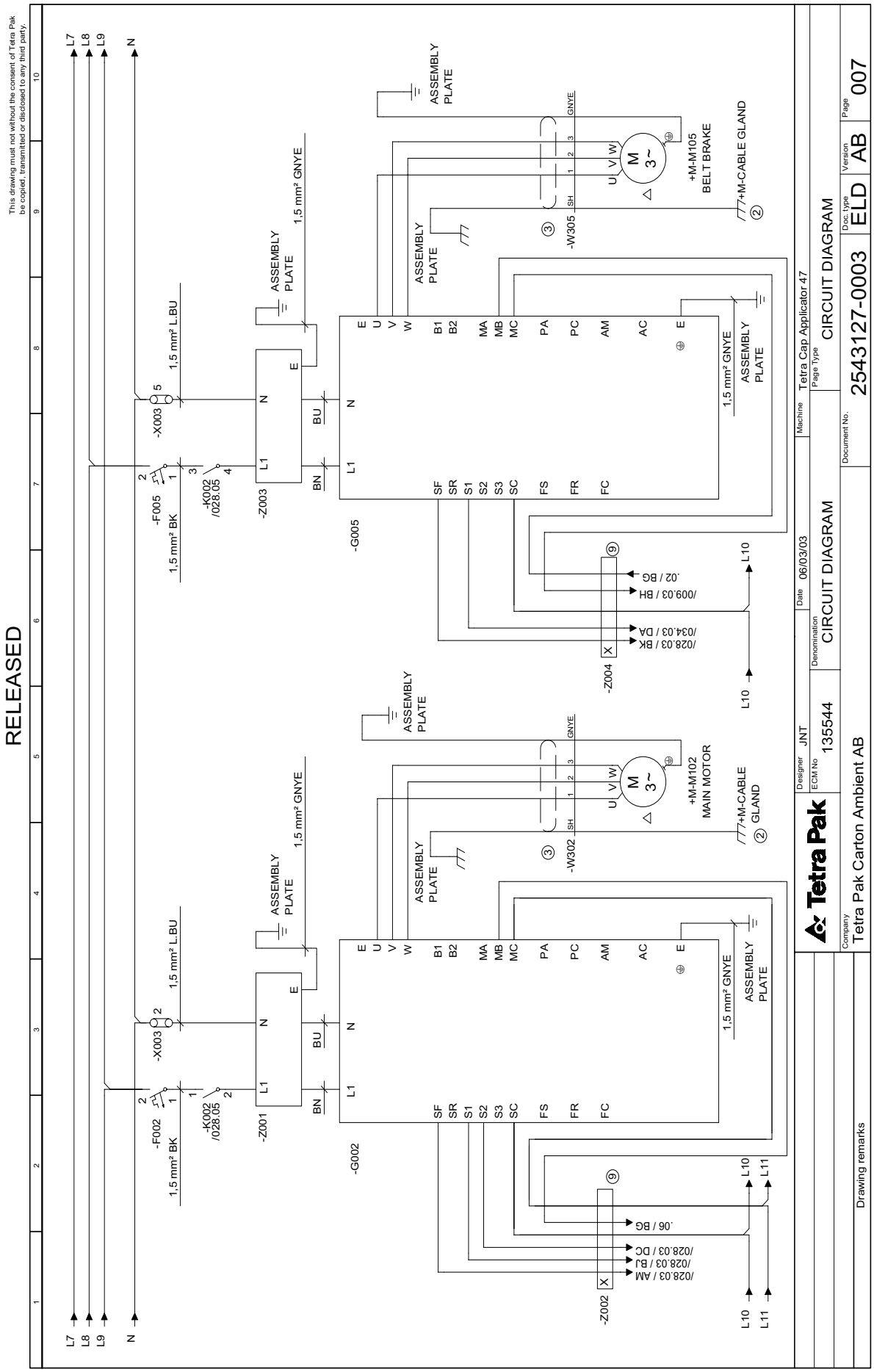

EM1.1TH900620en.fm

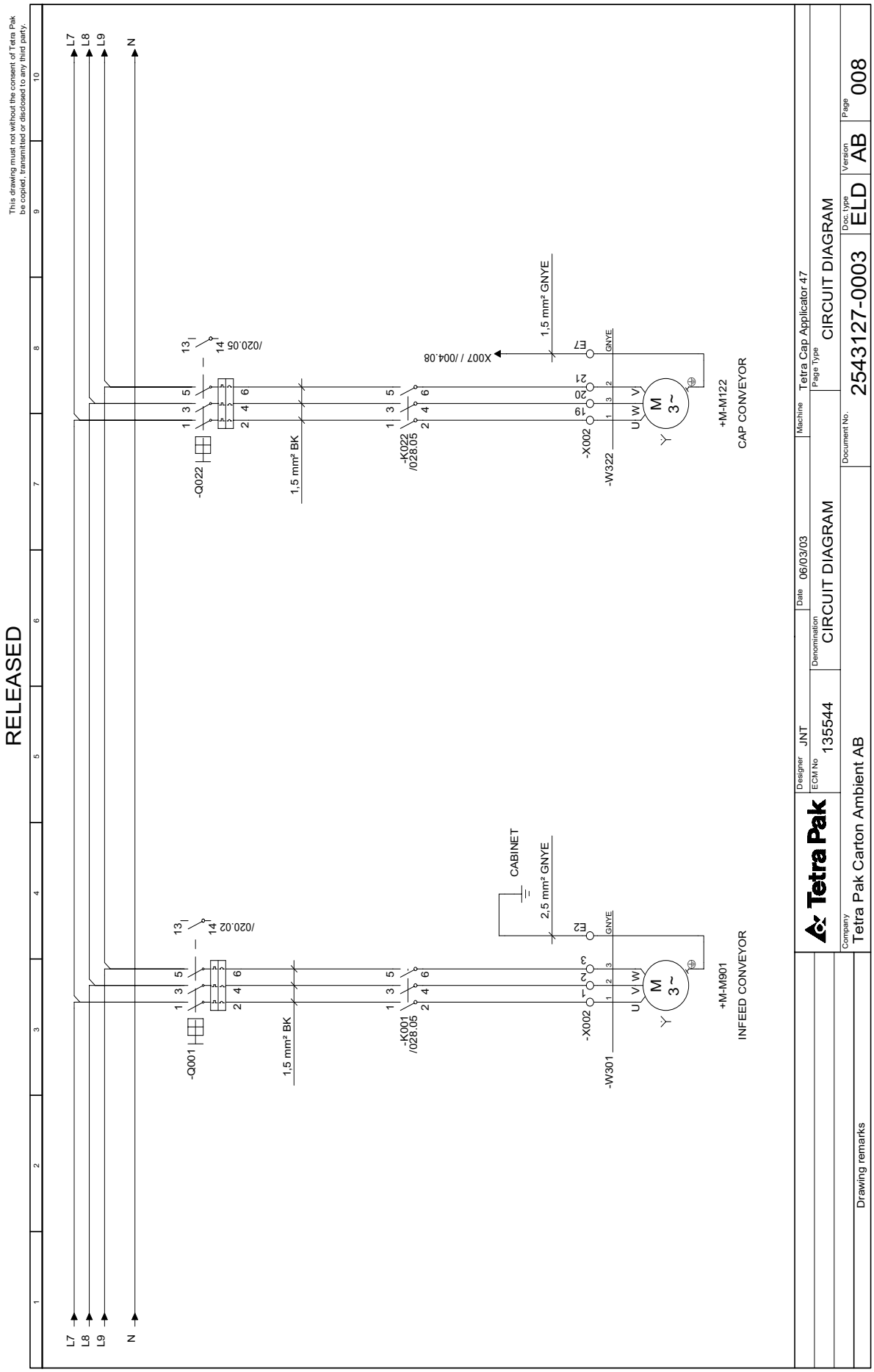

EM1.1TH900620en.fm

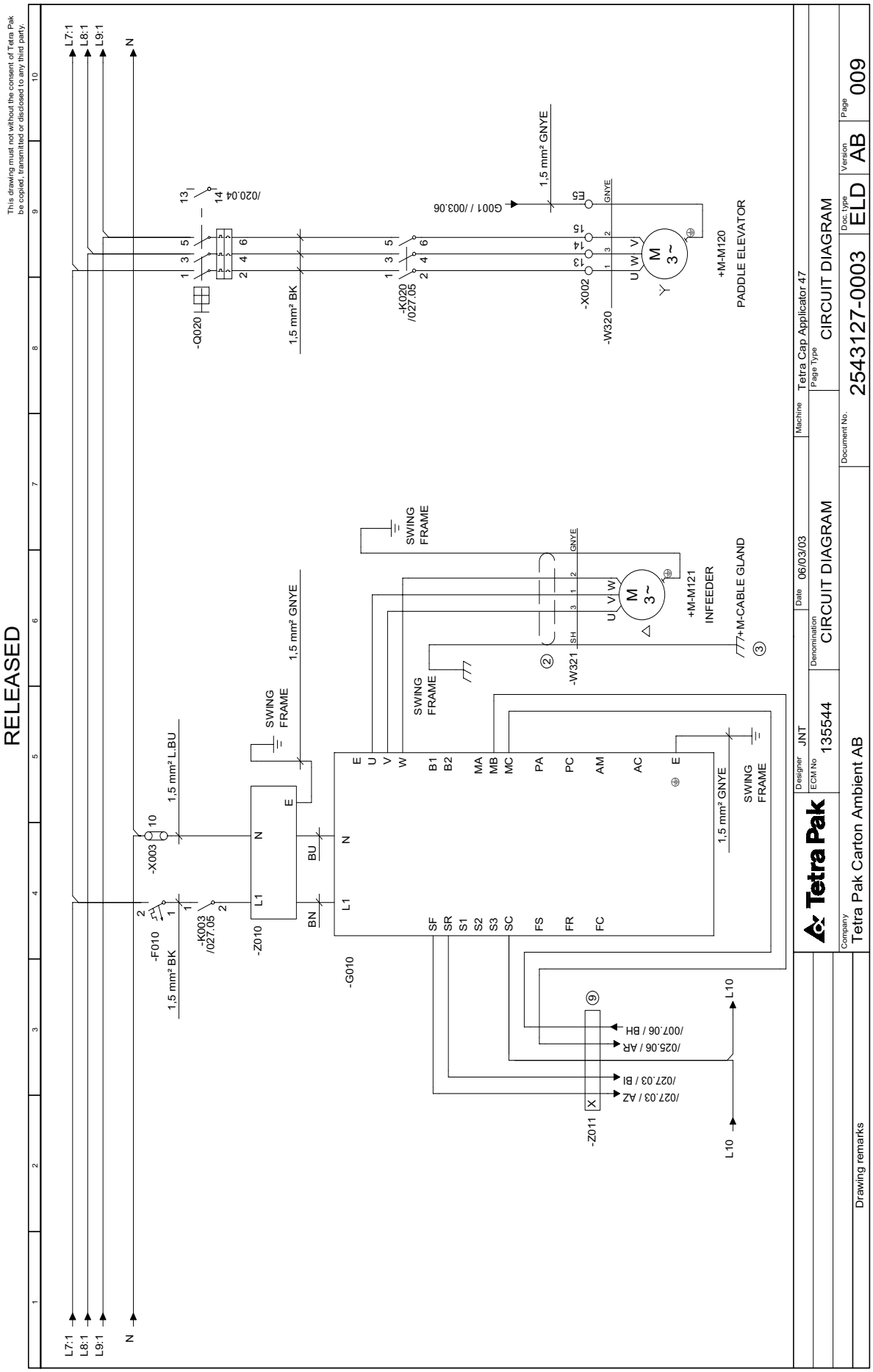
RELEASED
EM1.1TH900620en.fm
This drawing must not without the consent of Tetra Pak be copied, transmitted or disclosed to any third party.
L7:1
L8:1
L9:1
N
-Q020
/020.04
1,5 mm² BK
-K020
/027.05
G001 / /003.06
1,5 mm² GNYE
-X002
-W320
+M-M120
PADDLE ELEVATOR
-X003
1,5 mm² L.BU
-F010
-K003
/027.05
-Z010
-G010
SWING FRAME
-W321
+M-M121
INFEEDER
+M-CABLE GLAND
-Z011
/027.03 / AZ
/027.03 / BI
/025.06 / AR
/007.06 / BH
L10
Tetra Pak
Designer JNT
ECM No 135544
Date 06/03/03
Machine Tetra Cap Applicator 47
Page Type CIRCUIT DIAGRAM
Denomination CIRCUIT DIAGRAM
Document No. 2543127-0003
Doc. type ELD
Version AB
Page 009
Company Tetra Pak Carton Ambient AB
Drawing remarks

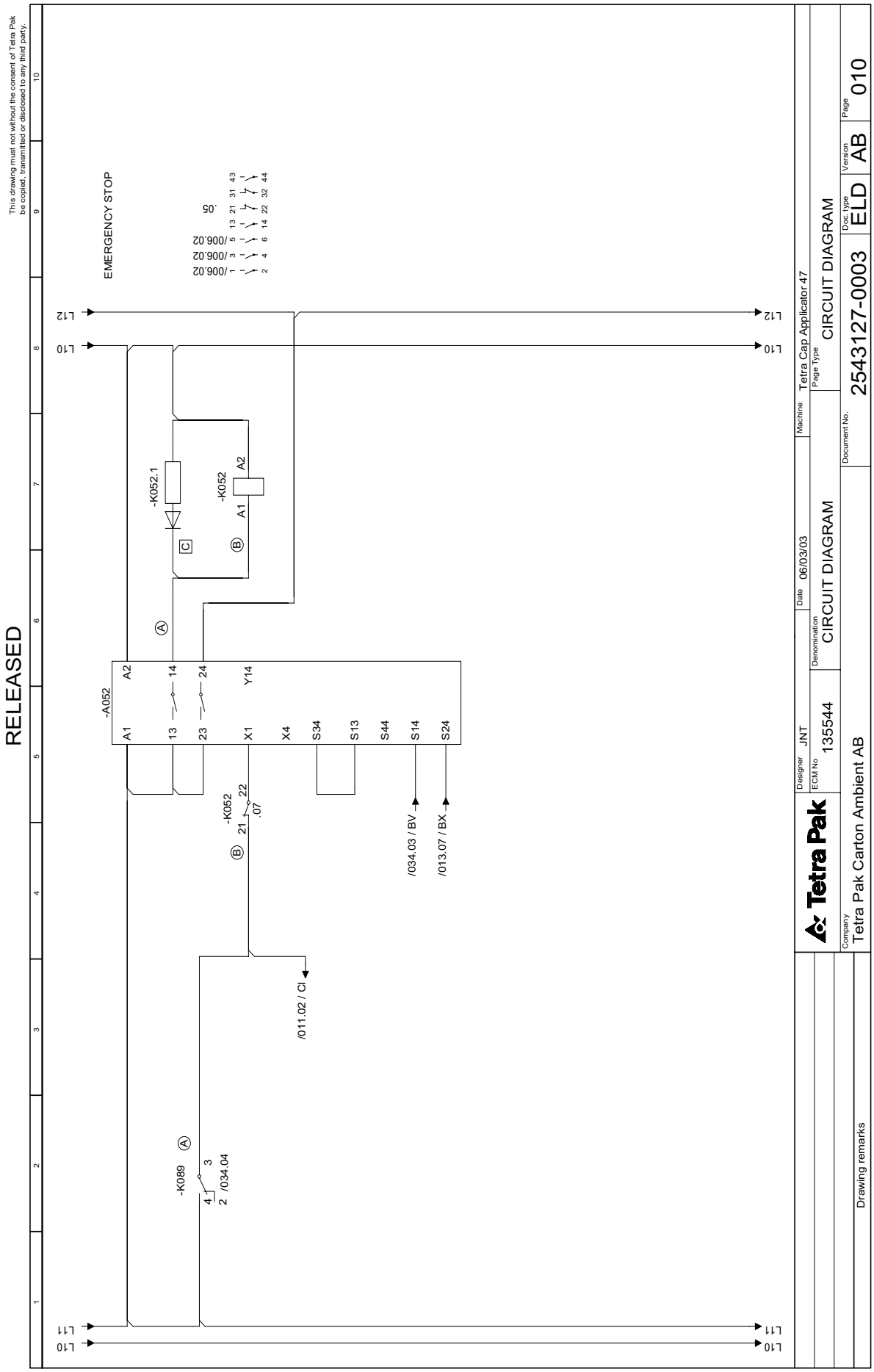

EM1.1TH900620en.fm

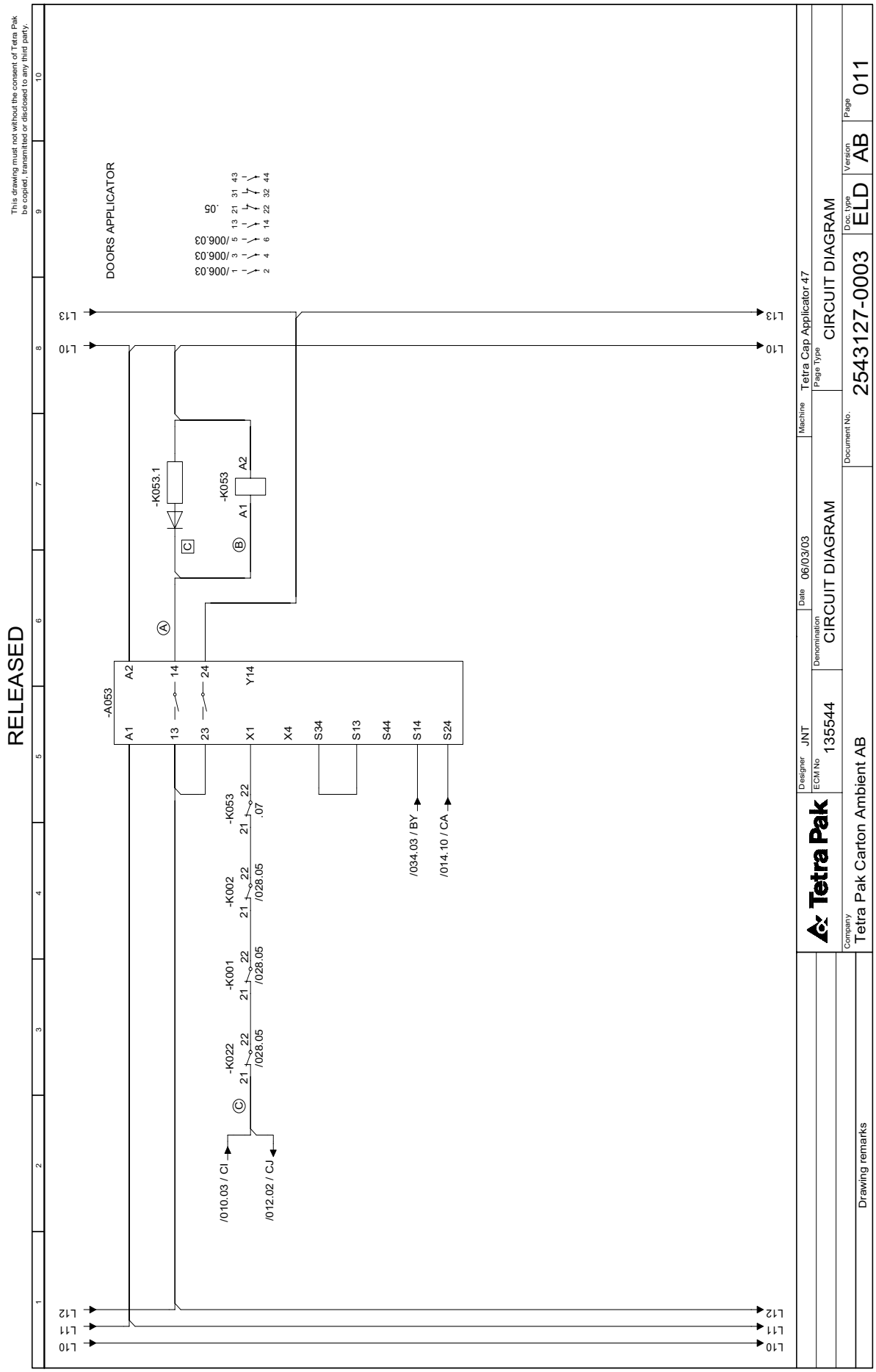

EM1.1TH900620en.fm

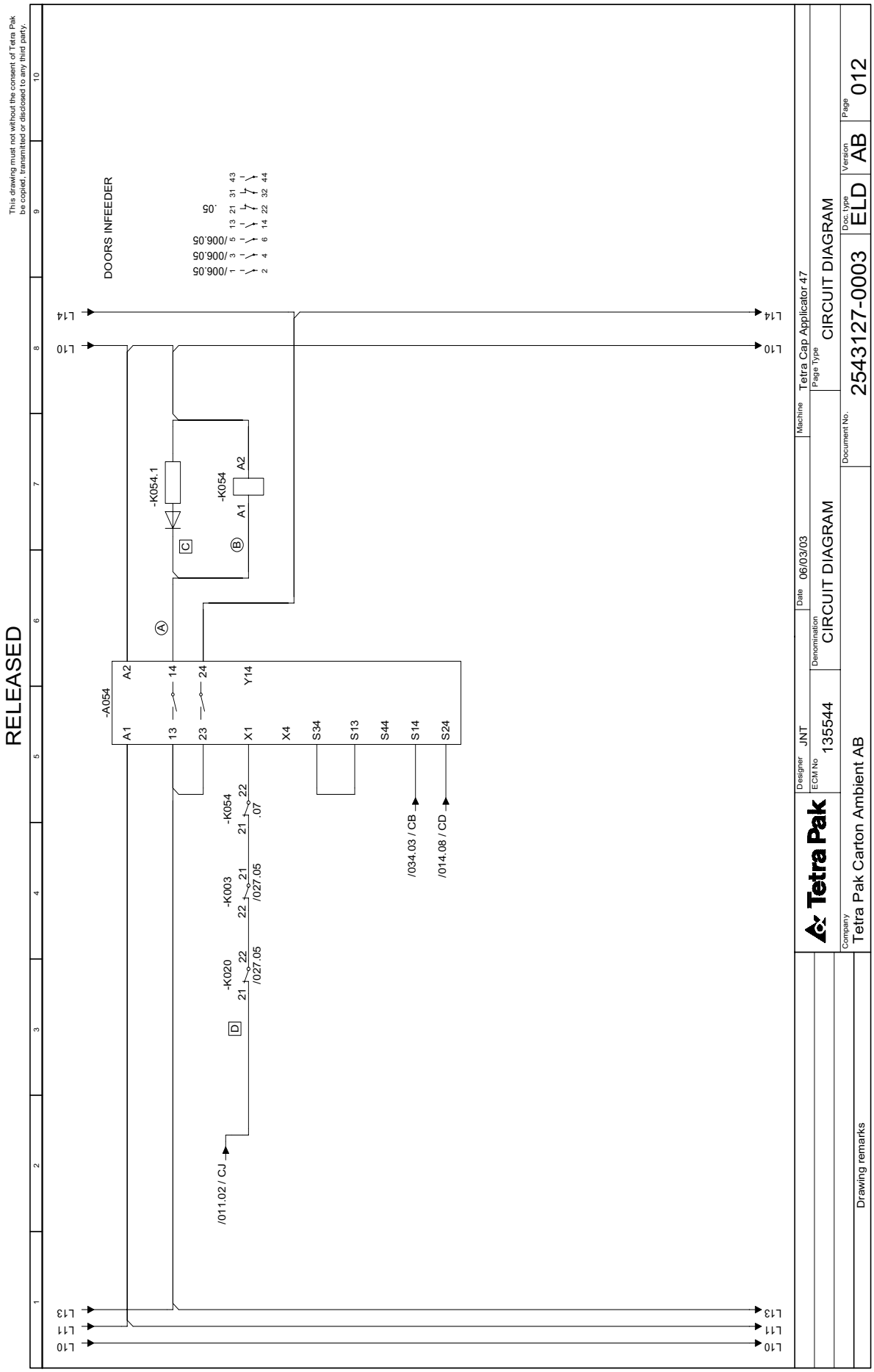

EM1.1TH900620en.fm

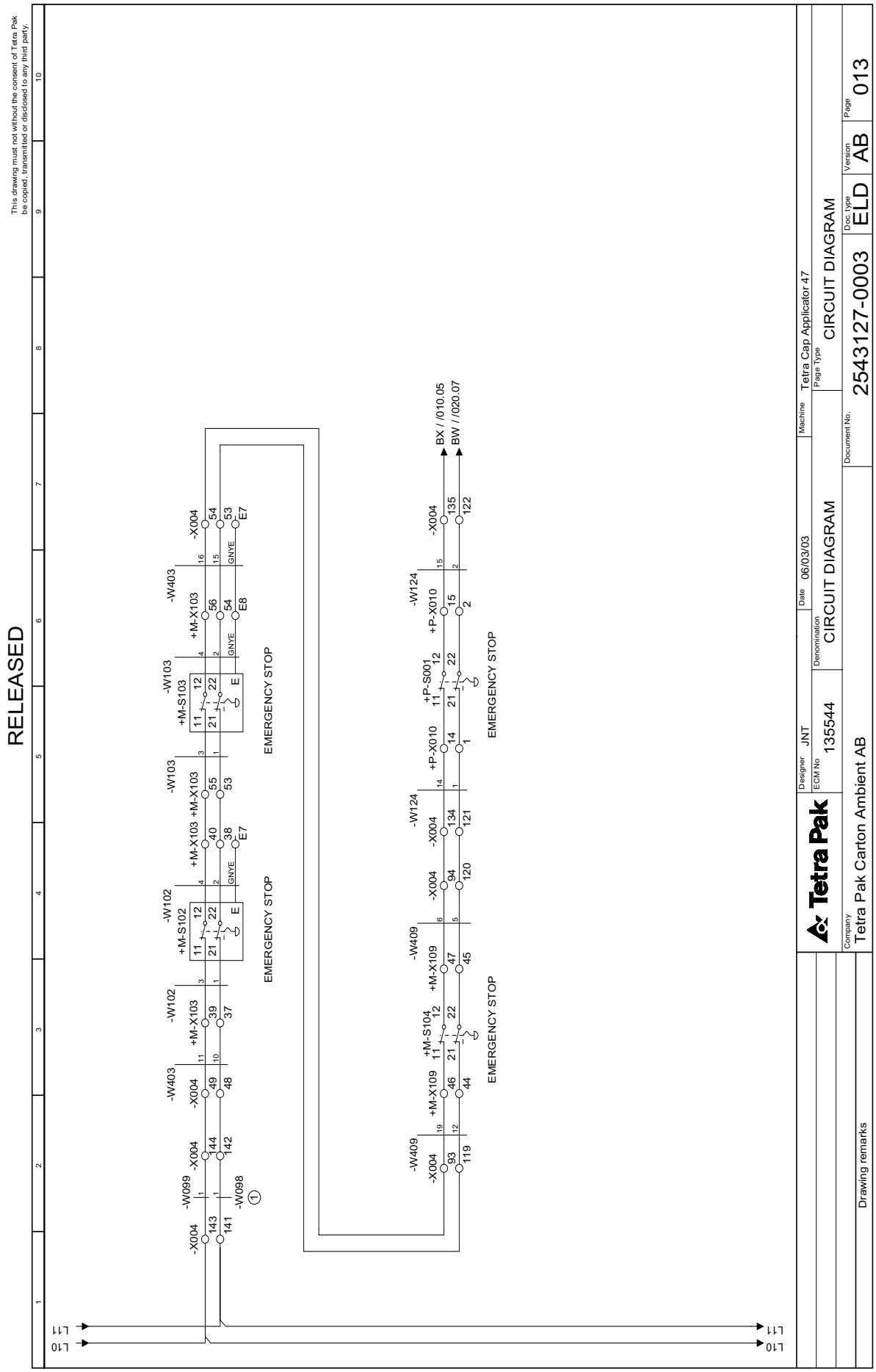
RELEASED
EM1.1TH900620en.fm
This drawing must not without the consent of Tetra Pak be copied, transmitted or disclosed to any third party.
L11
L10
-X004
-W099
-W098
-W403
-W102
-W103
-W409
-W124
+M-X103
+M-S102
+M-S103
+M-X109
+M-S104
+P-X010
+P-S001
EMERGENCY STOP
BX / /010.05
BW / /020.07
Tetra Pak
Designer JNT
ECM No 135544
Date 06/03/03
Denomination CIRCUIT DIAGRAM
Machine Tetra Cap Applicator 47
Page Type CIRCUIT DIAGRAM
Company Tetra Pak Carton Ambient AB
Document No. 2543127-0003
Doc. type ELD
Version AB
Page 013
Drawing remarks

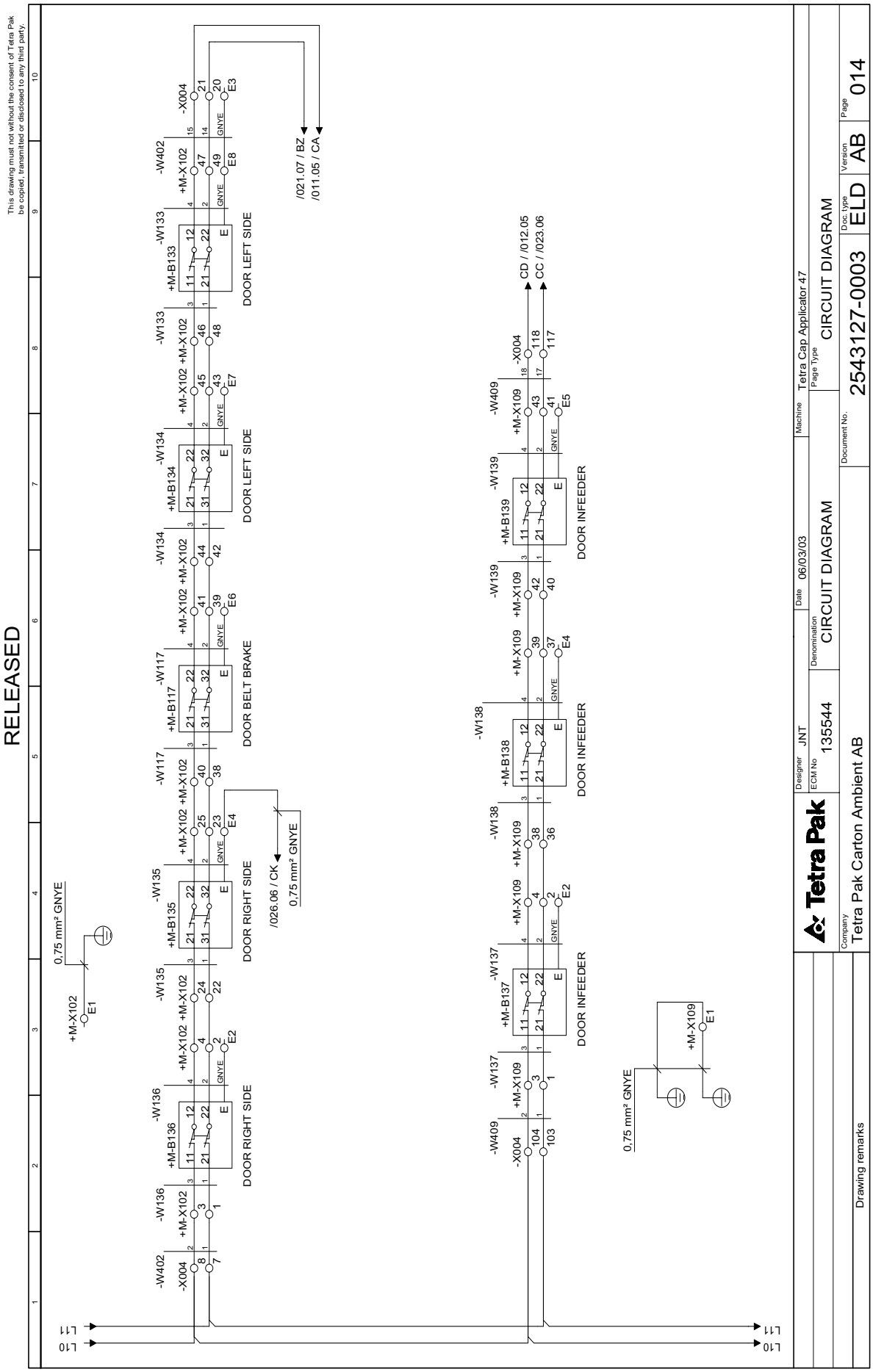

EM1.1TH900620en.fm

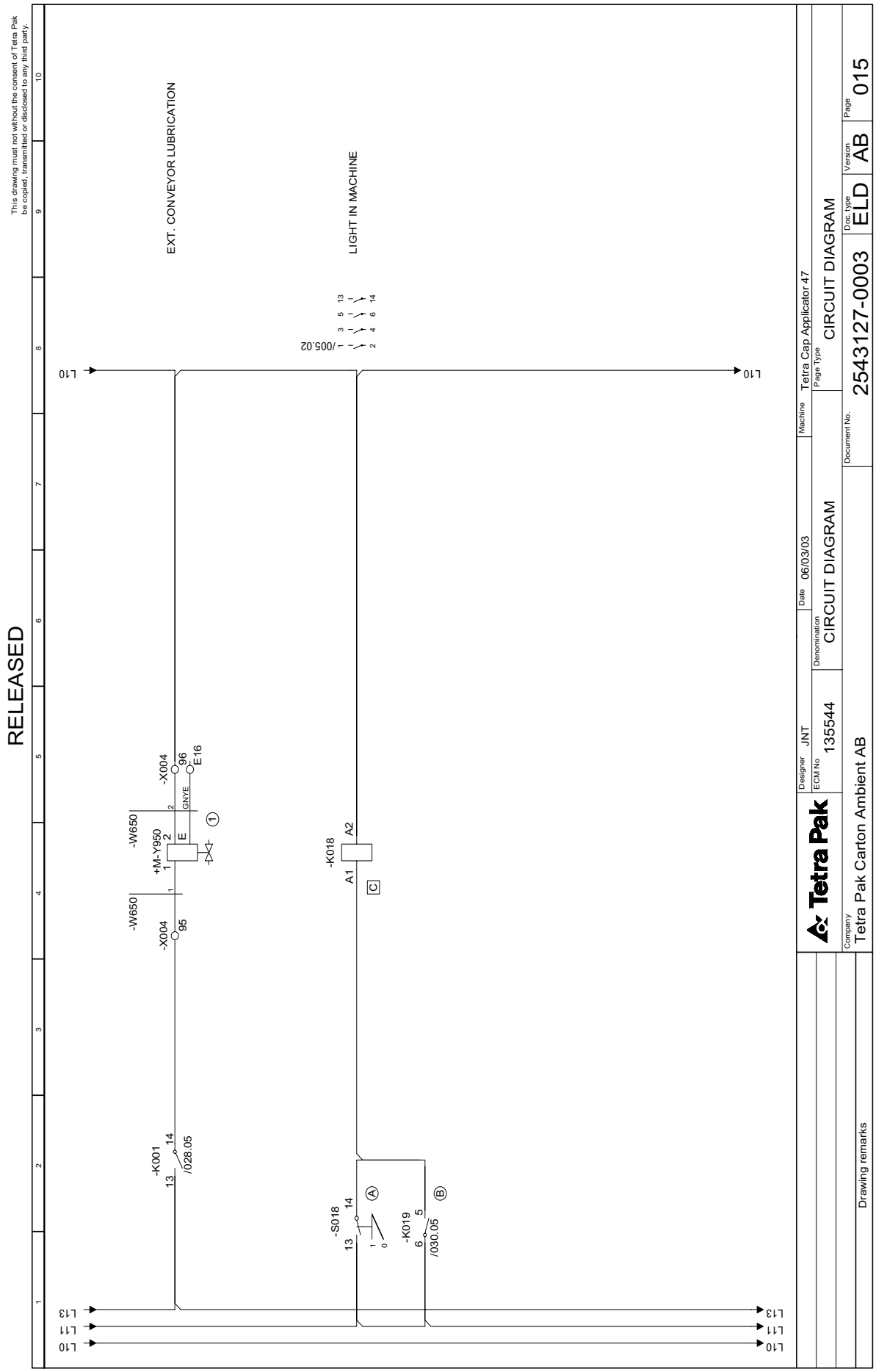

EM1.1TH900620en.fm

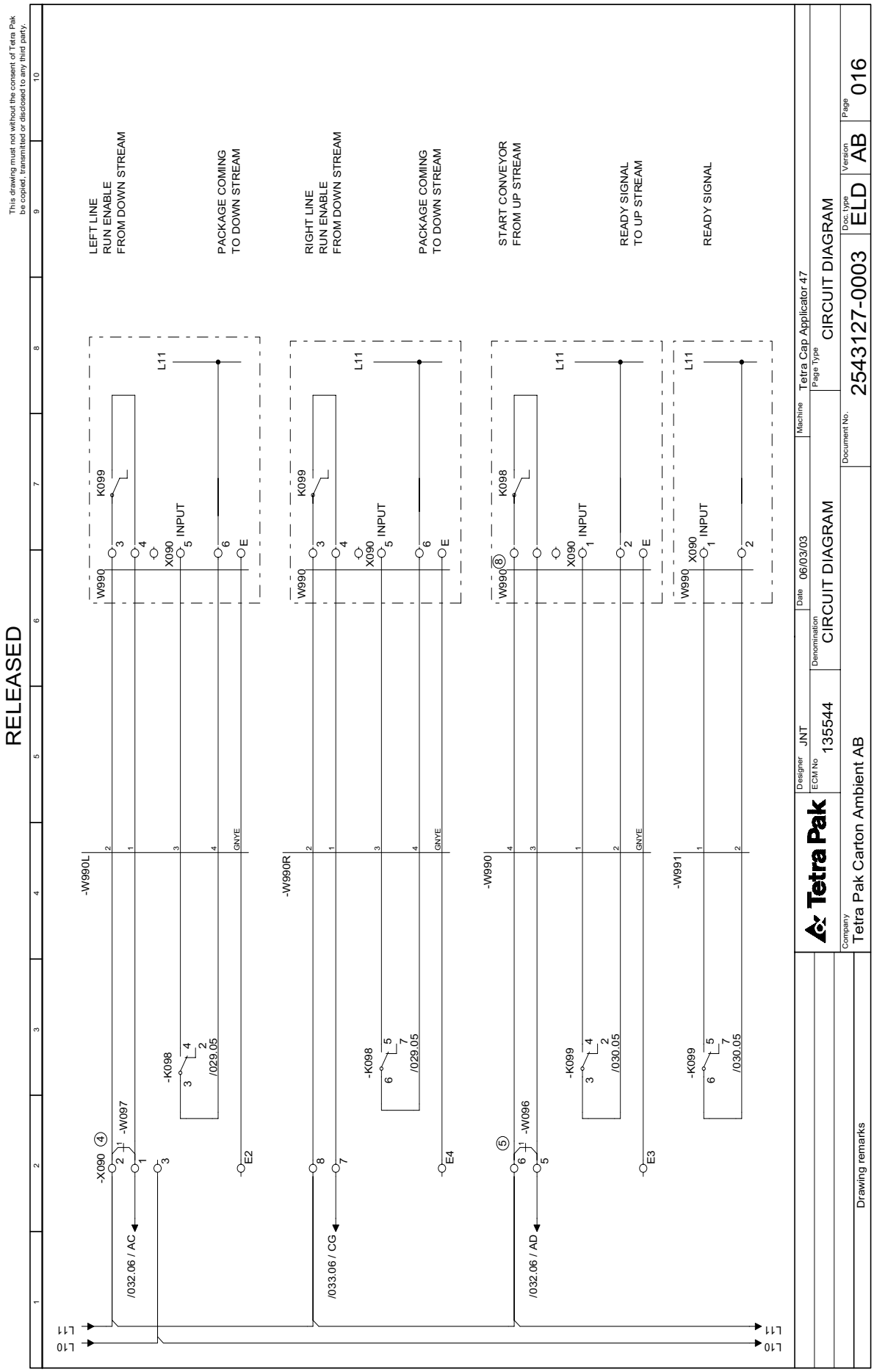

EM1.1TH900620en.fm

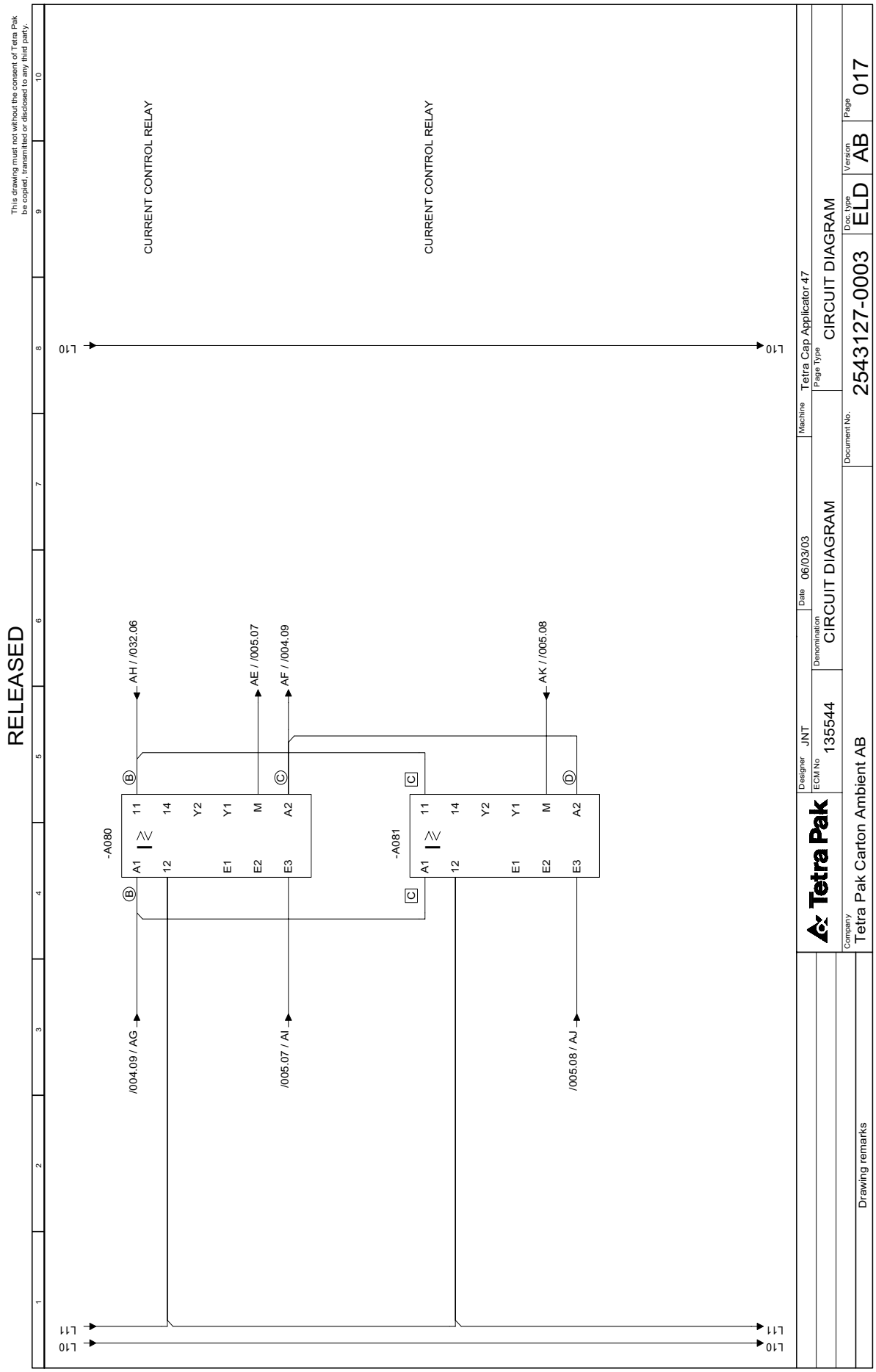

EM1.1TH900620en.fm

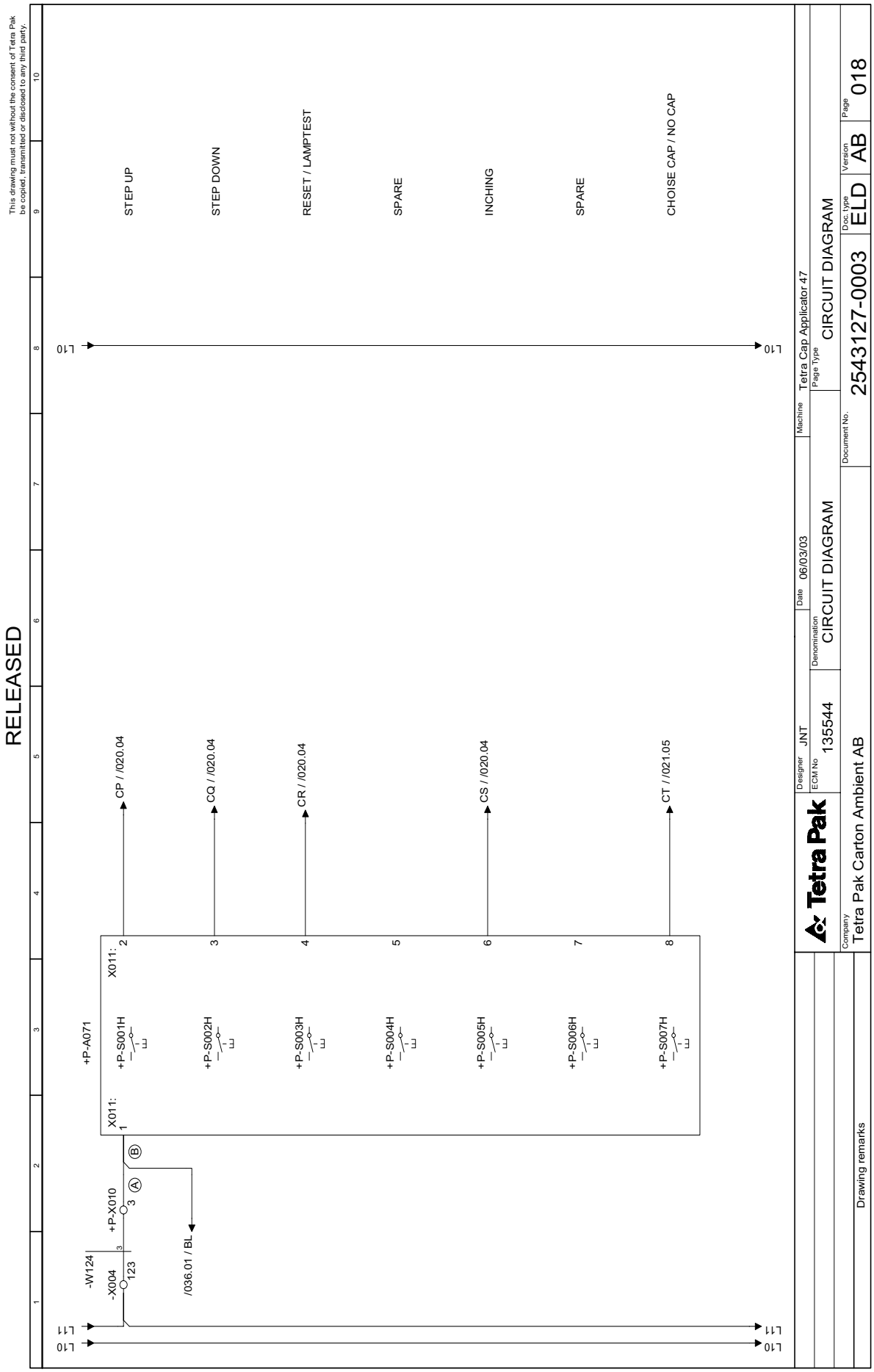

EM1.1TH900620en.fm

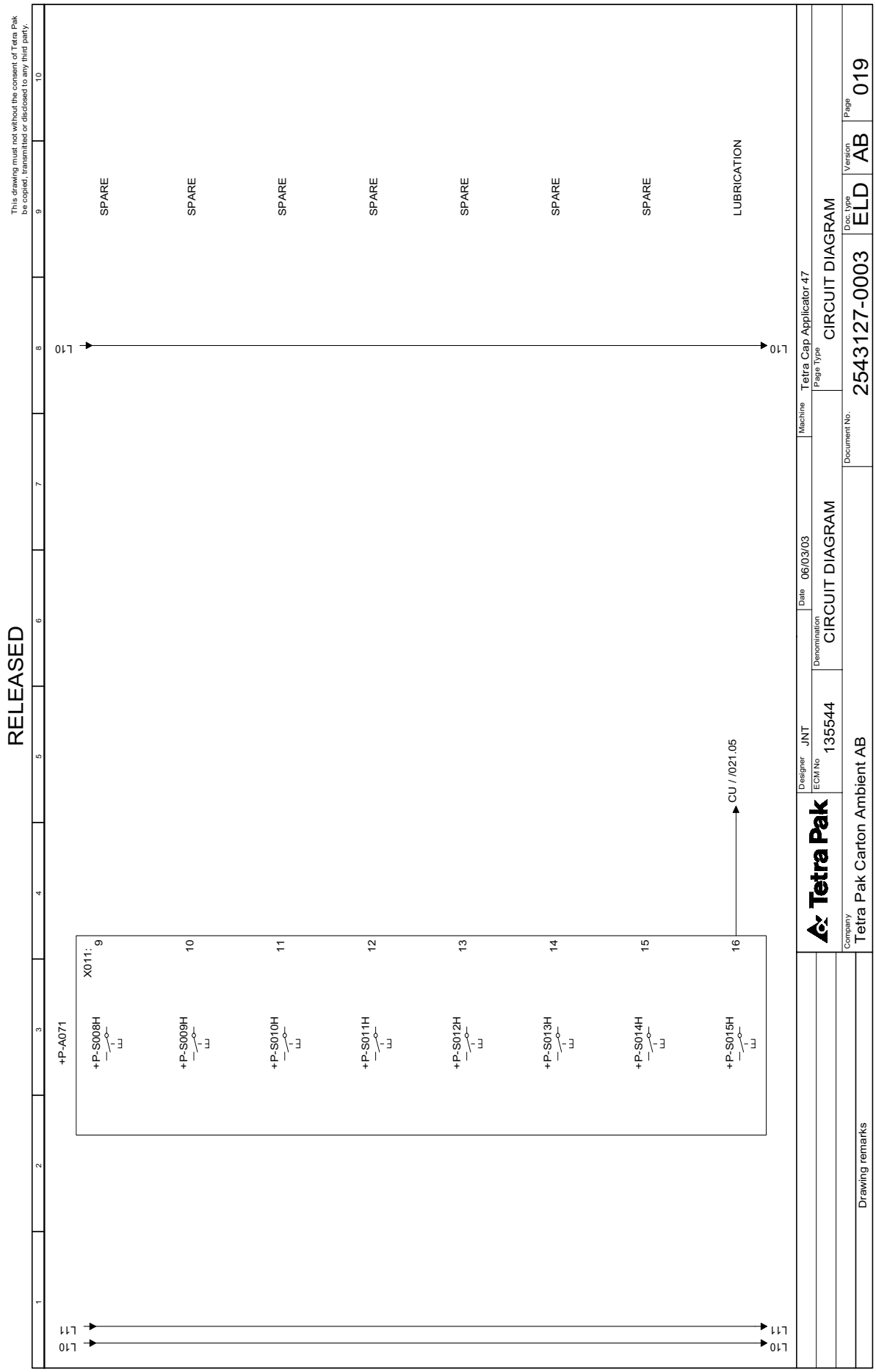

EM1.1TH900620en.fm

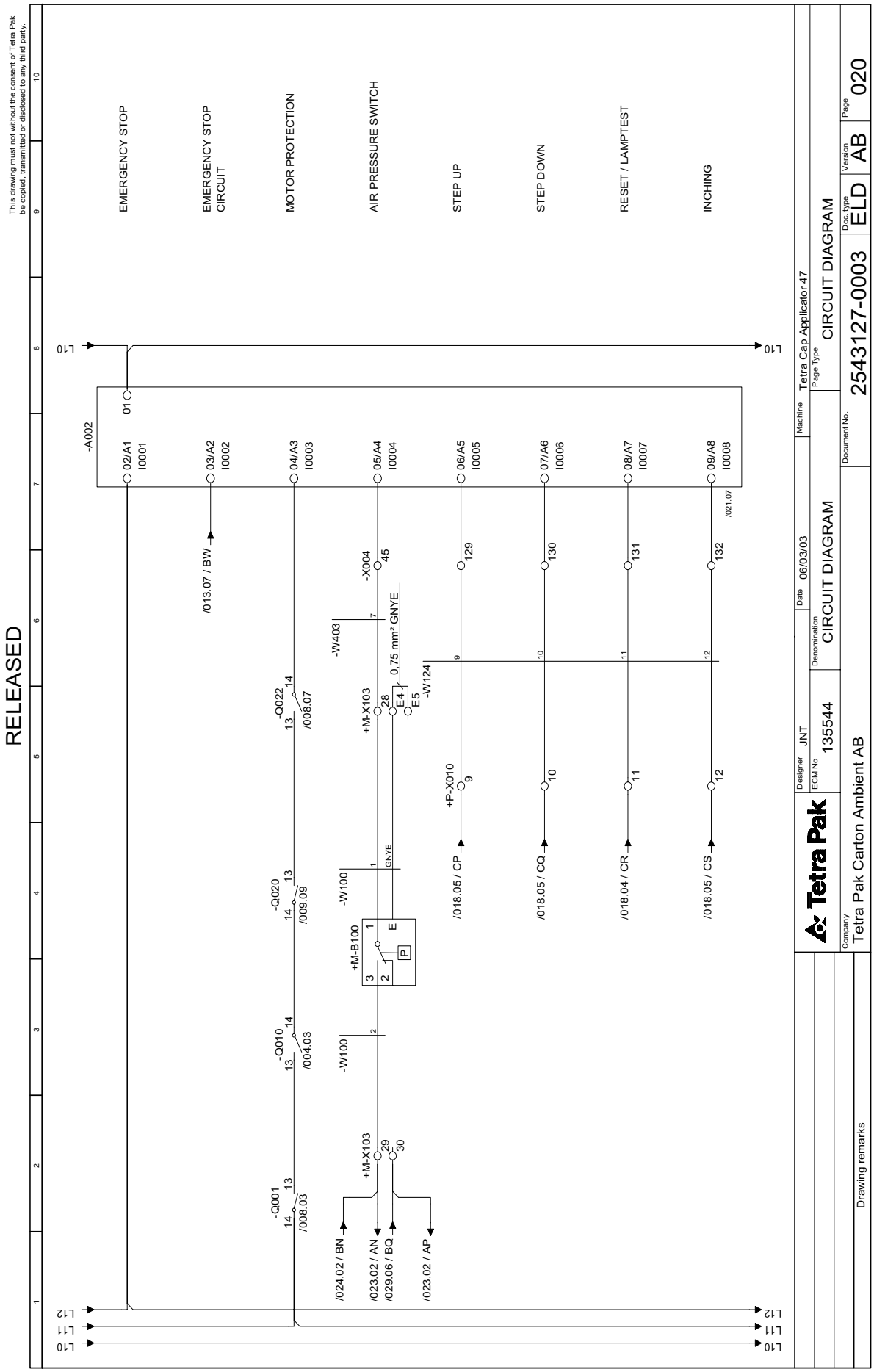

EM1.1TH900620en.fm

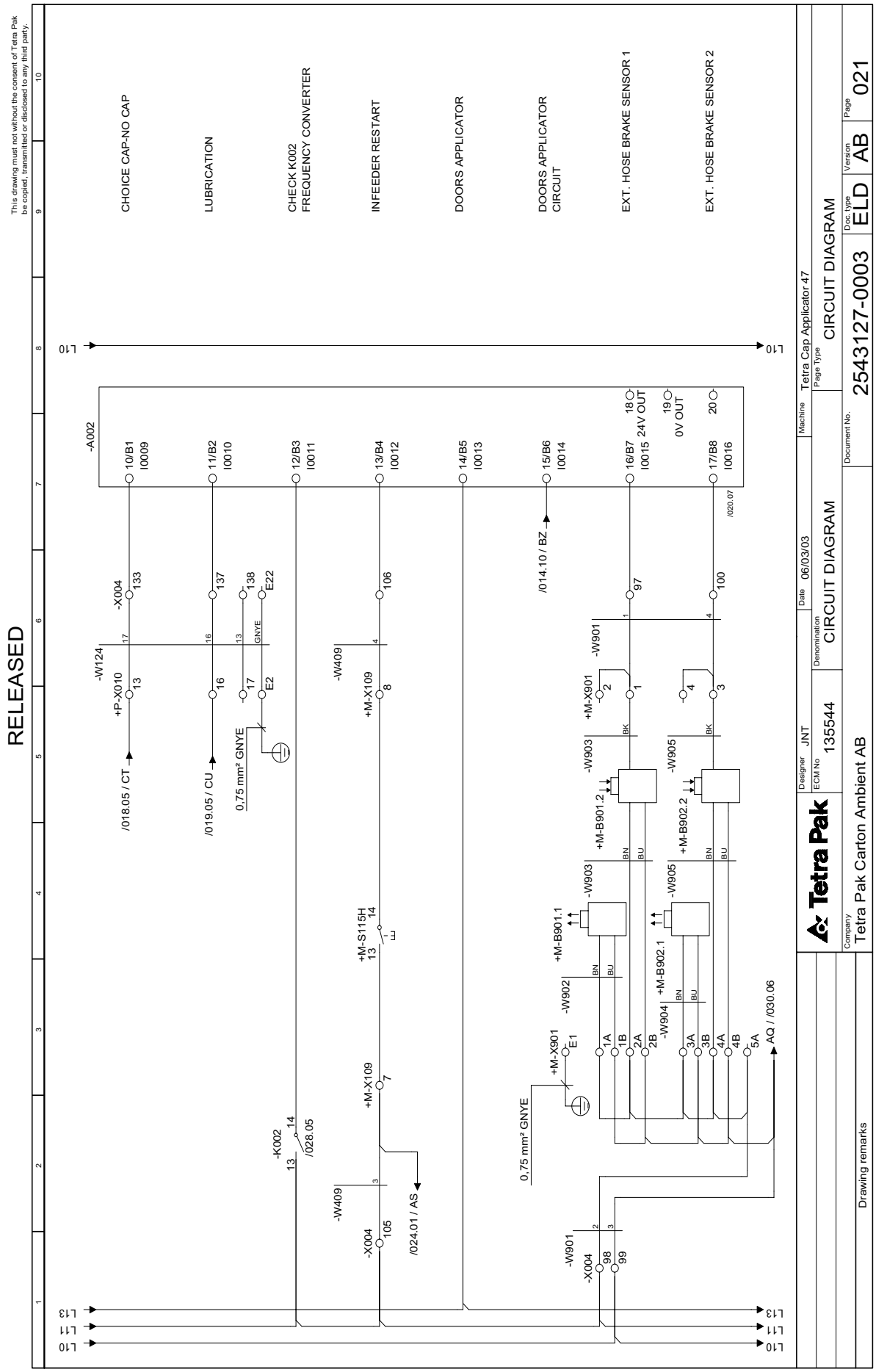
RELEASED
EM1.1TH900620en.fm
This drawing must not without the consent of Tetra Pak be copied, transmitted or disclosed to any third party.
CHOICE CAP-NO CAP
LUBRICATION
CHECK K002 FREQUENCY CONVERTER
INFEEDER RESTART
DOORS APPLICATOR
DOORS APPLICATOR CIRCUIT
EXT. HOSE BRAKE SENSOR 1
EXT. HOSE BRAKE SENSOR 2
-A002
10/B1 I0009
11/B2 I0010
12/B3 I0011
13/B4 I0012
14/B5 I0013
15/B6 I0014
16/B7 I0015
17/B8 I0016
18 24V OUT
19 0V OUT
20
/014.10 / BZ
/020.07
/018.05 / CT
/019.05 / CU
0,75 mm² GNYE
-W124
+P-X010
-X004
-W409
+M-X109
+M-S115H
-K002
/028.05
/024.01 / AS
-W901
+M-X901
-W903
-W905
+M-B901.1
+M-B901.2
+M-B902.1
+M-B902.2
-W902
-W904
AQ / /030.06
L10
L11
L13
Tetra Pak
Designer JNT
ECM No 135544
Date 06/03/03
Denomination CIRCUIT DIAGRAM
Machine Tetra Cap Applicator 47
Page Type CIRCUIT DIAGRAM
Document No. 2543127-0003
Doc. type ELD
Version AB
Page 021
Company Tetra Pak Carton Ambient AB
Drawing remarks

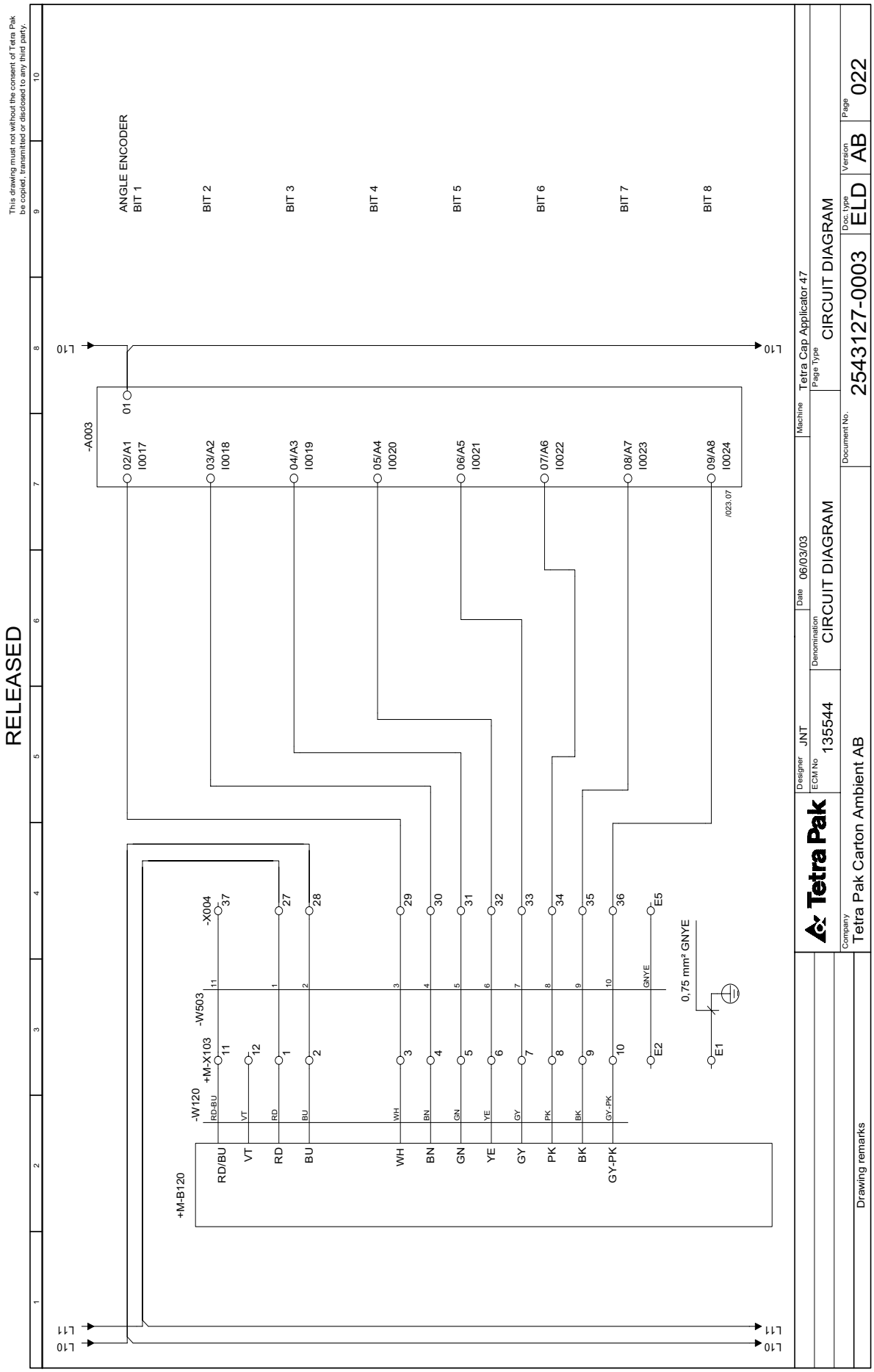

EM1.1TH900620en.fm

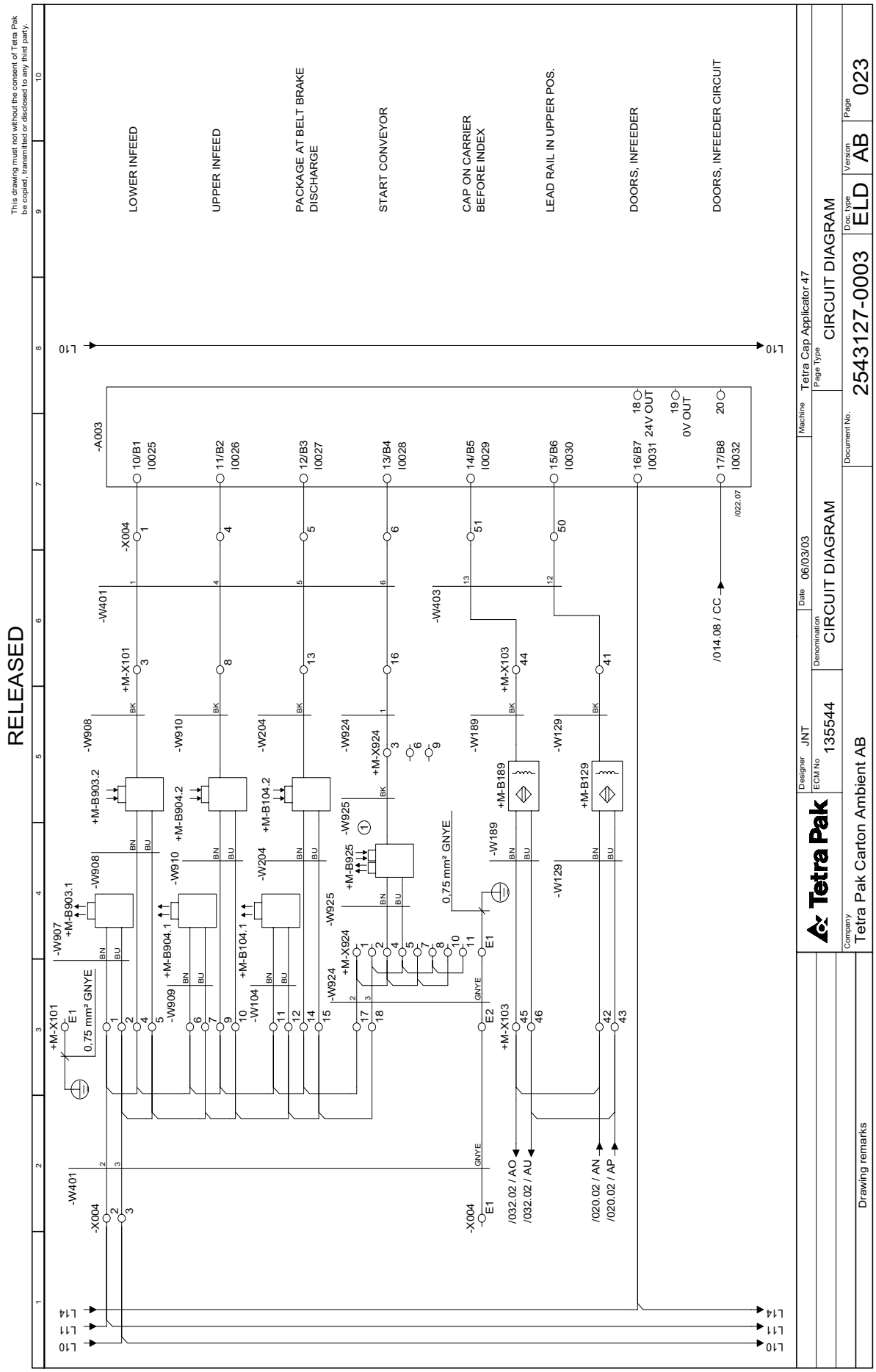
EM1.1TH900620en.fm
RELEASED
This drawing must not without the consent of Tetra Pak be copied, transmitted or disclosed to any third party.
LOWER INFEED
UPPER INFEED
PACKAGE AT BELT BRAKE DISCHARGE
START CONVEYOR
CAP ON CARRIER BEFORE INDEX
LEAD RAIL IN UPPER POS.
DOORS, INFEEDER
DOORS, INFEEDER CIRCUIT
-A003
10/B1 I0025
11/B2 I0026
12/B3 I0027
13/B4 I0028
14/B5 I0029
15/B6 I0030
16/B7 I0031 24V OUT
17/B8 I0032
18 19 20
0V OUT
/022.07
/014.08 / CC
-X004
-W401
+M-X101
-W908
+M-B903.2
-W907
+M-B903.1
-W910
+M-B904.2
+M-B904.1
-W909
-W204
+M-B104.2
+M-B104.1
-W104
-W924
+M-X924
-W925
+M-B925
0,75 mm² GNYE
-W403
+M-X103
-W189
+M-B189
-W129
+M-B129
/032.02 / AO
/032.02 / AU
/020.02 / AN
/020.02 / AP
L10
L11
L14
Tetra Pak
Designer JNT
ECM No 135544
Date 06/03/03
Machine Tetra Cap Applicator 47
Page Type CIRCUIT DIAGRAM
Denomination CIRCUIT DIAGRAM
Document No. 2543127-0003
Doc. type ELD
Version AB
Page 023
Company Tetra Pak Carton Ambient AB
Drawing remarks

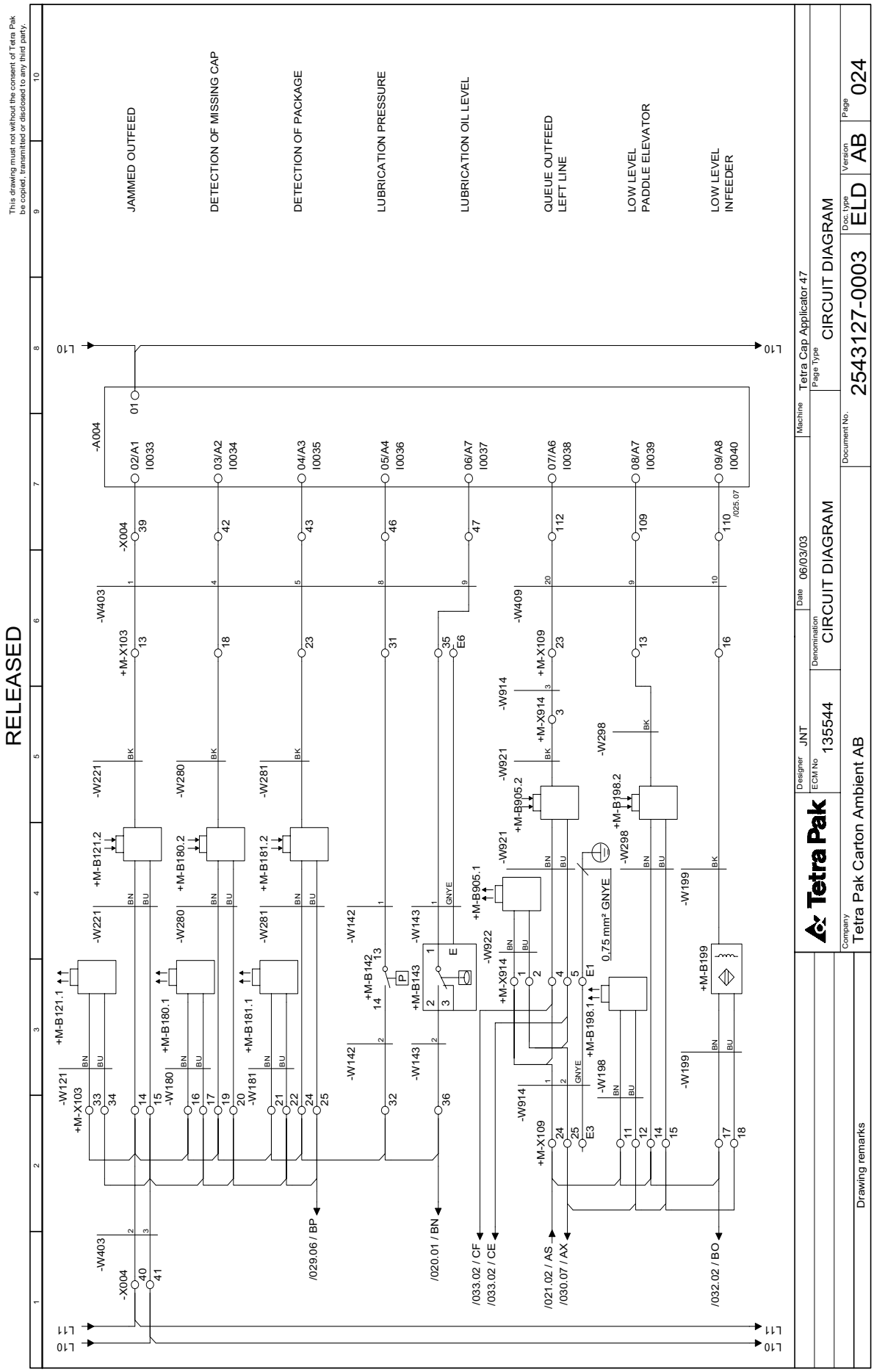

EM1.1TH900620en.fm

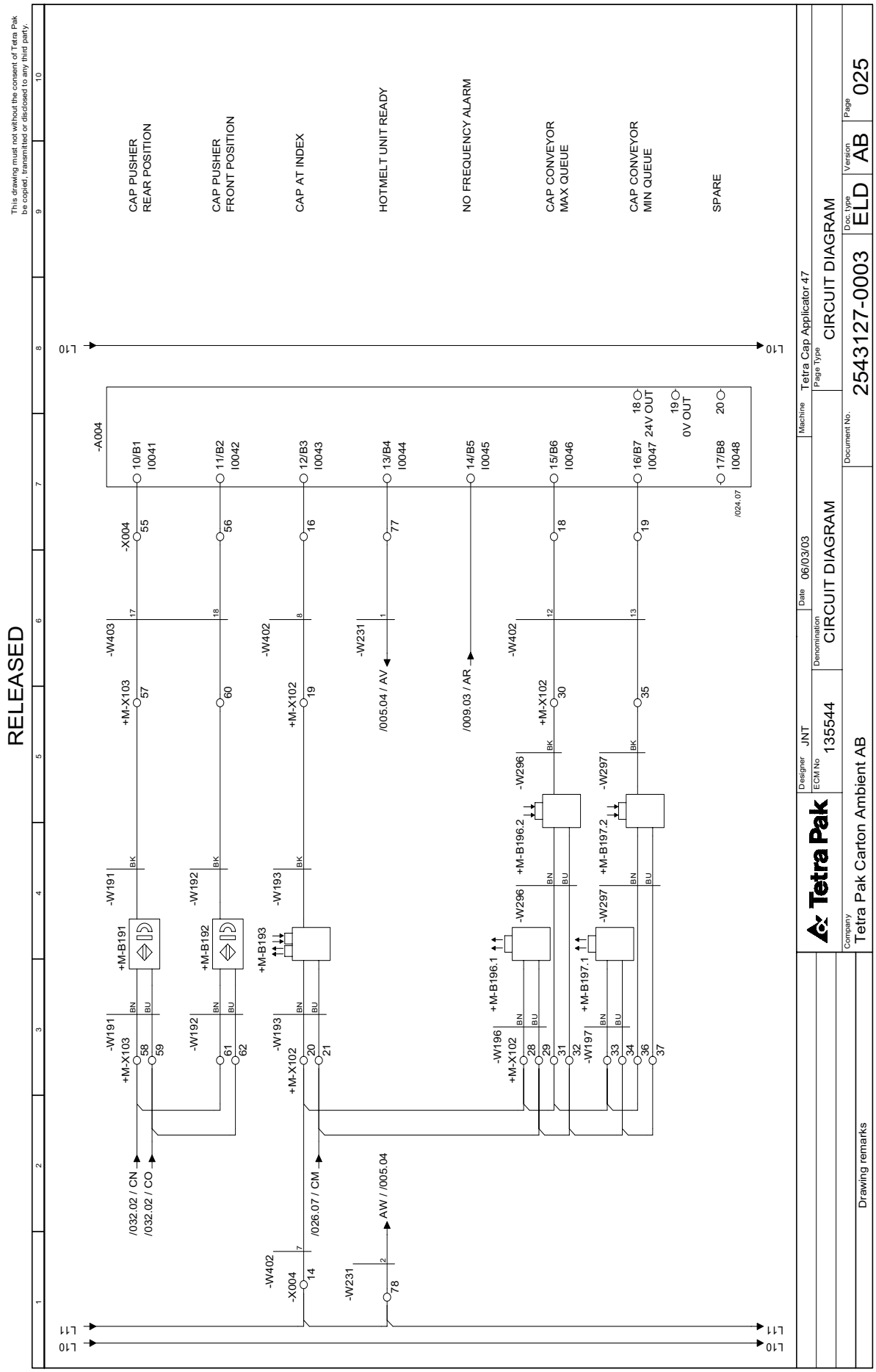
EM1.1TH900620en.fm
RELEASED
This drawing must not without the consent of Tetra Pak be copied, transmitted or disclosed to any third party.
CAP PUSHER REAR POSITION
CAP PUSHER FRONT POSITION
CAP AT INDEX
HOTMELT UNIT READY
NO FREQUENCY ALARM
CAP CONVEYOR MAX QUEUE
CAP CONVEYOR MIN QUEUE
SPARE
-A004
24V OUT
0V OUT
/024.07
/005.04 / AV
/009.03 / AR
/032.02 / CN
/032.02 / CO
/026.07 / CM
AW / /005.04
Tetra Pak
Designer JNT
ECM No 135544
Date 06/03/03
Denomination CIRCUIT DIAGRAM
Machine Tetra Cap Applicator 47
Page Type CIRCUIT DIAGRAM
Document No. 2543127-0003
Doc. type ELD
Version AB
Page 025
Company Tetra Pak Carton Ambient AB
Drawing remarks

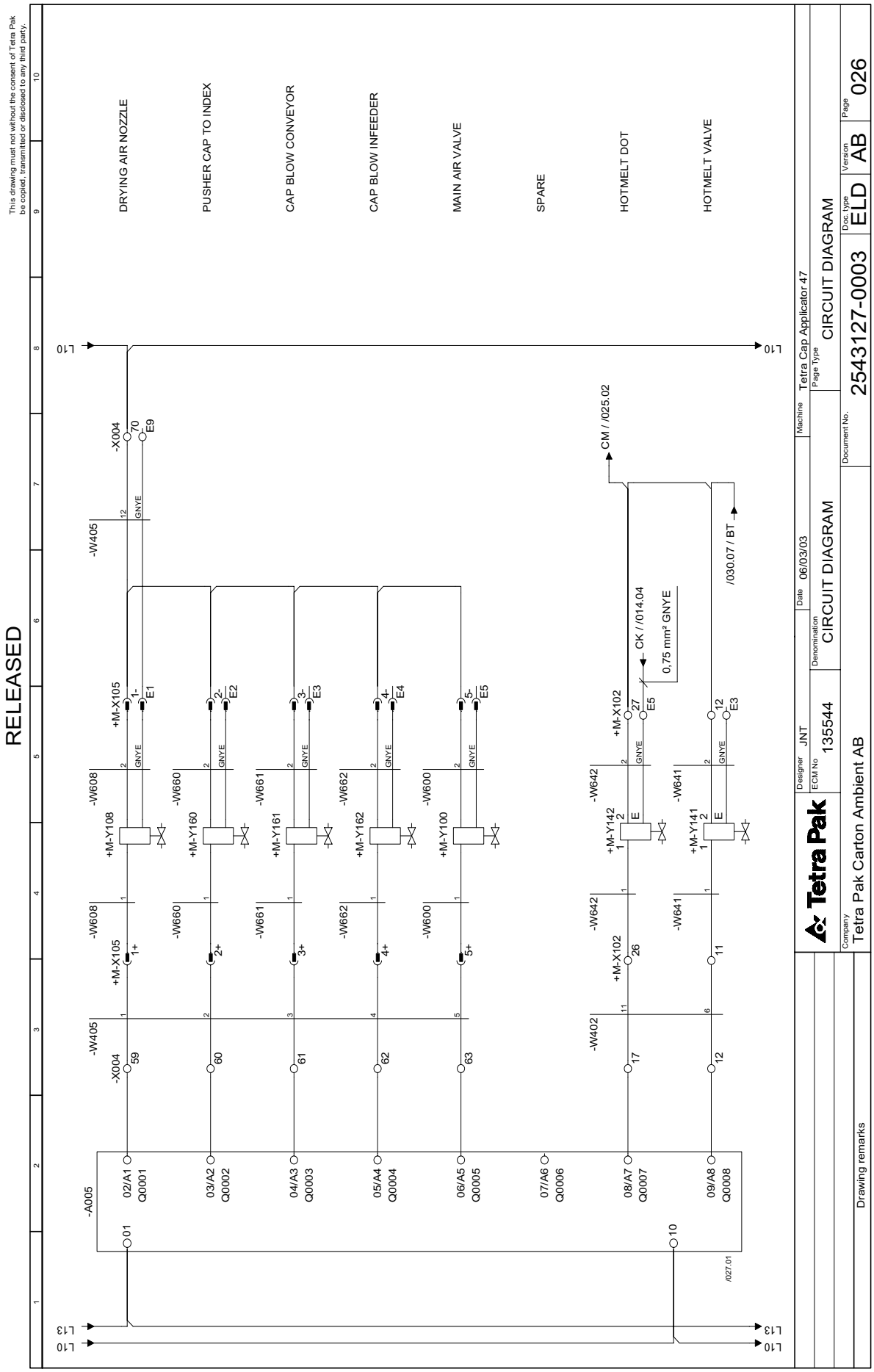

EM1.1TH900620en.fm

EM1.1TH900620en.fm

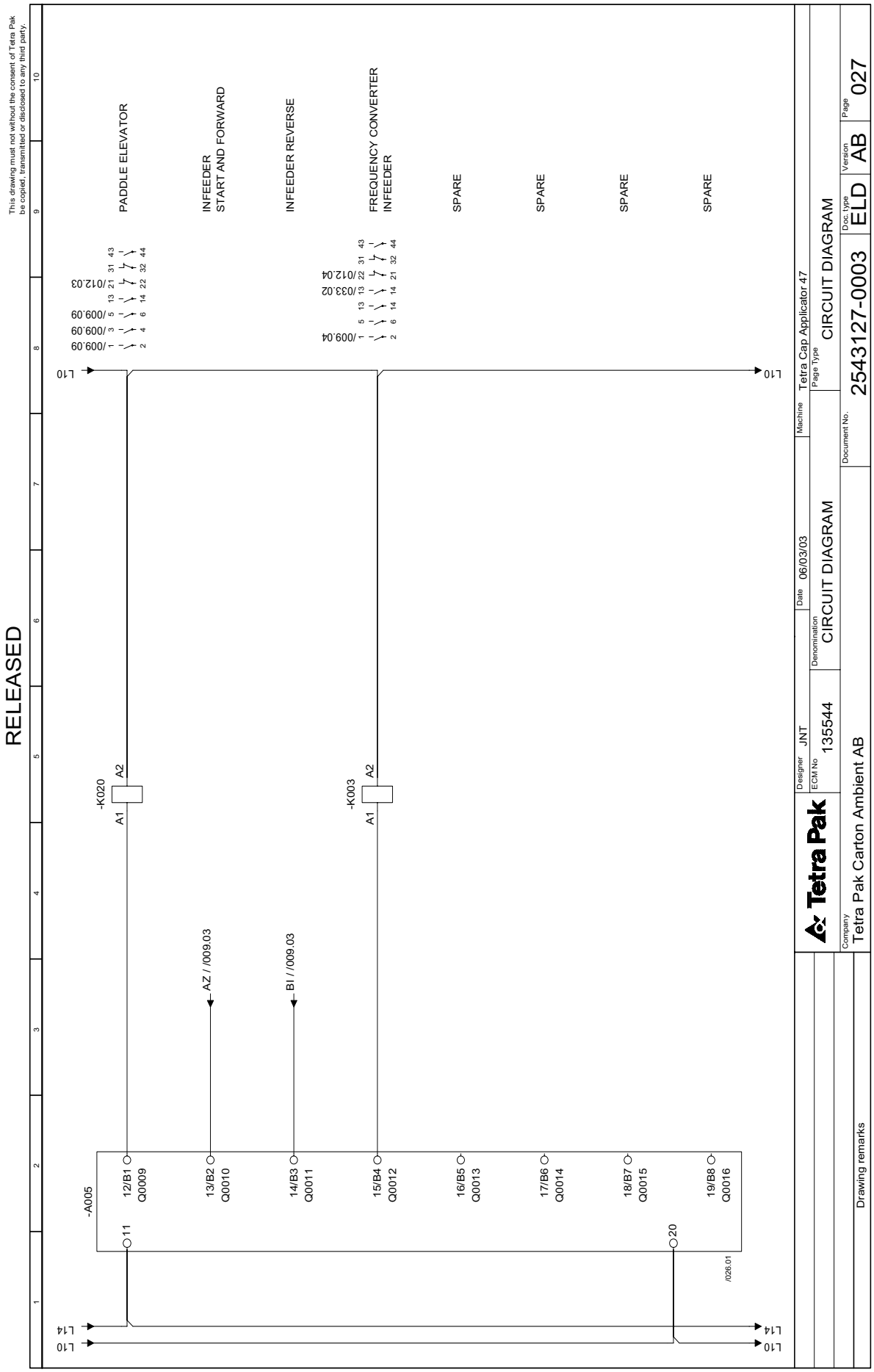

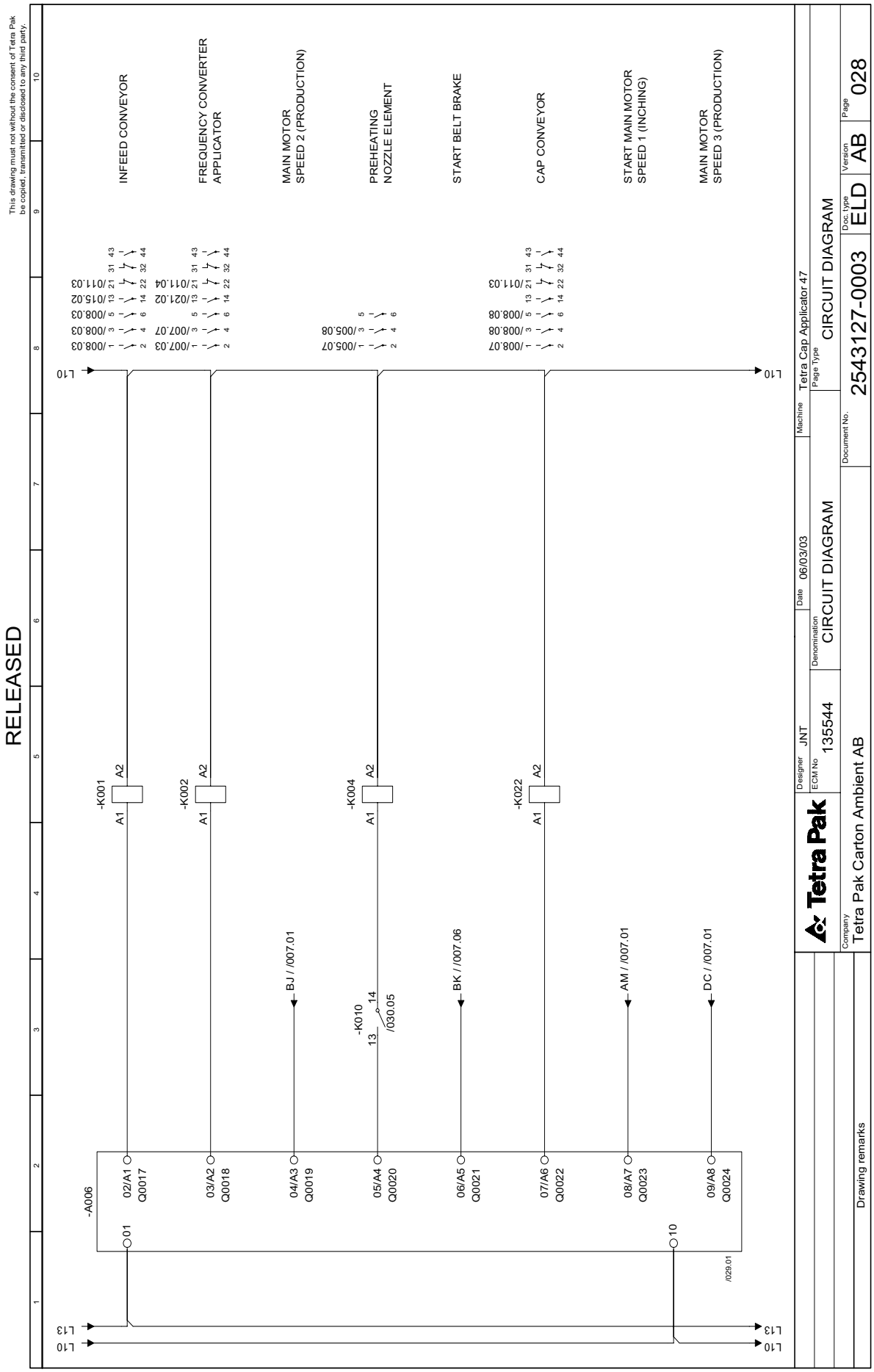

EM1.1TH900620en.fm

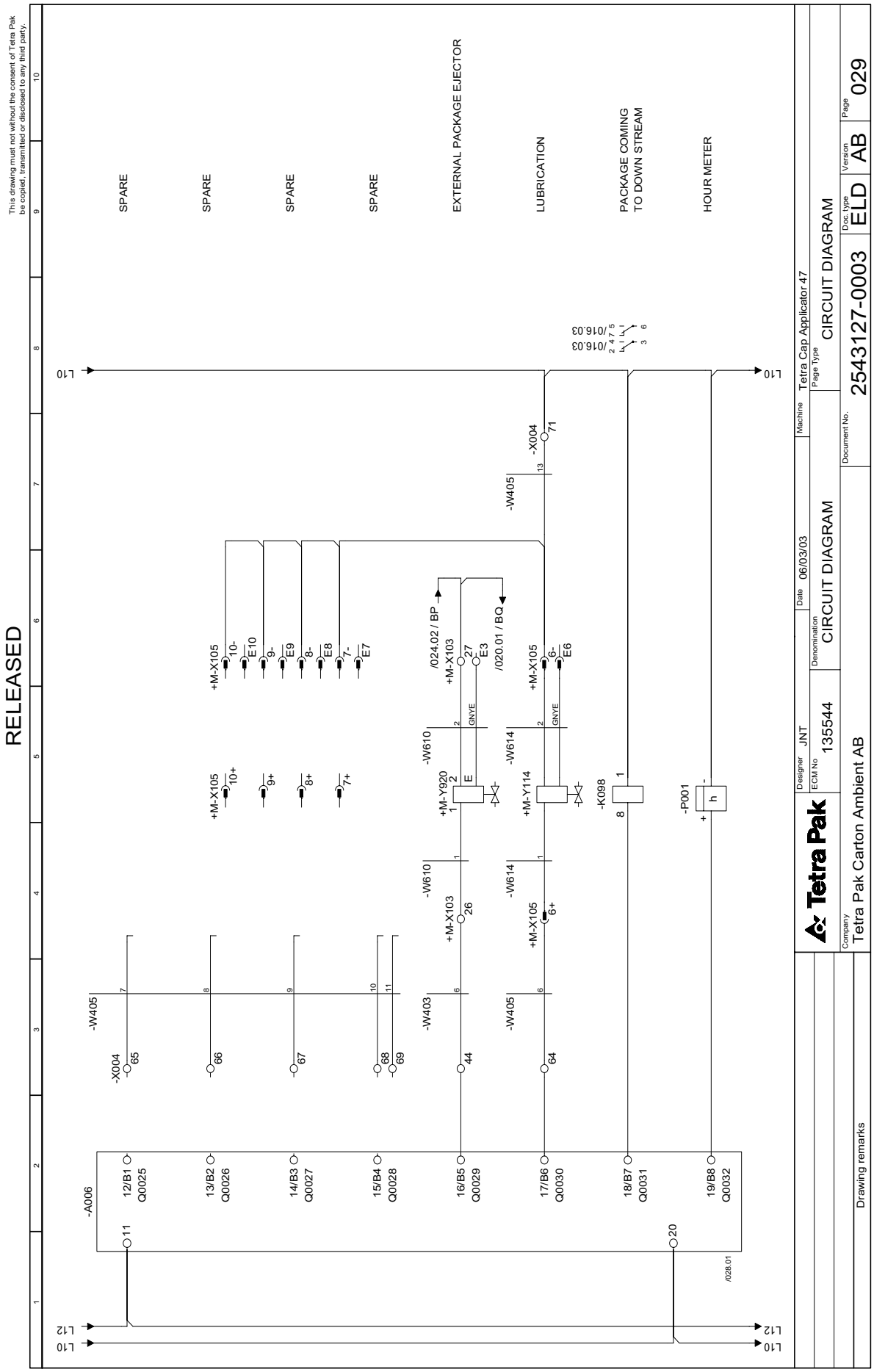

EM1.1TH900620en.fm

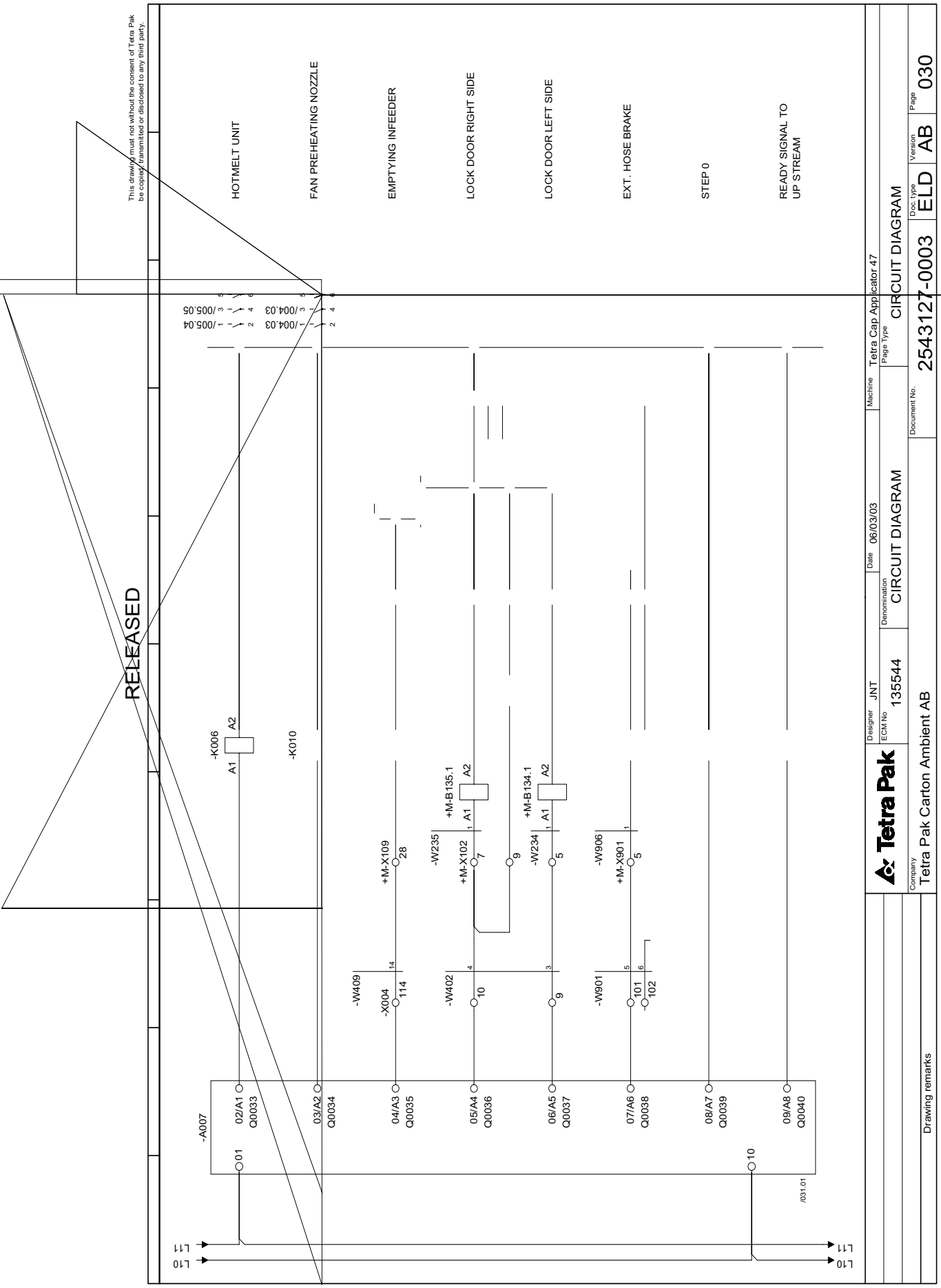

EM1.1TH900620en.fm

This drawing must not without the consent of Tetra Pak

EM1.1TH900620en.fm

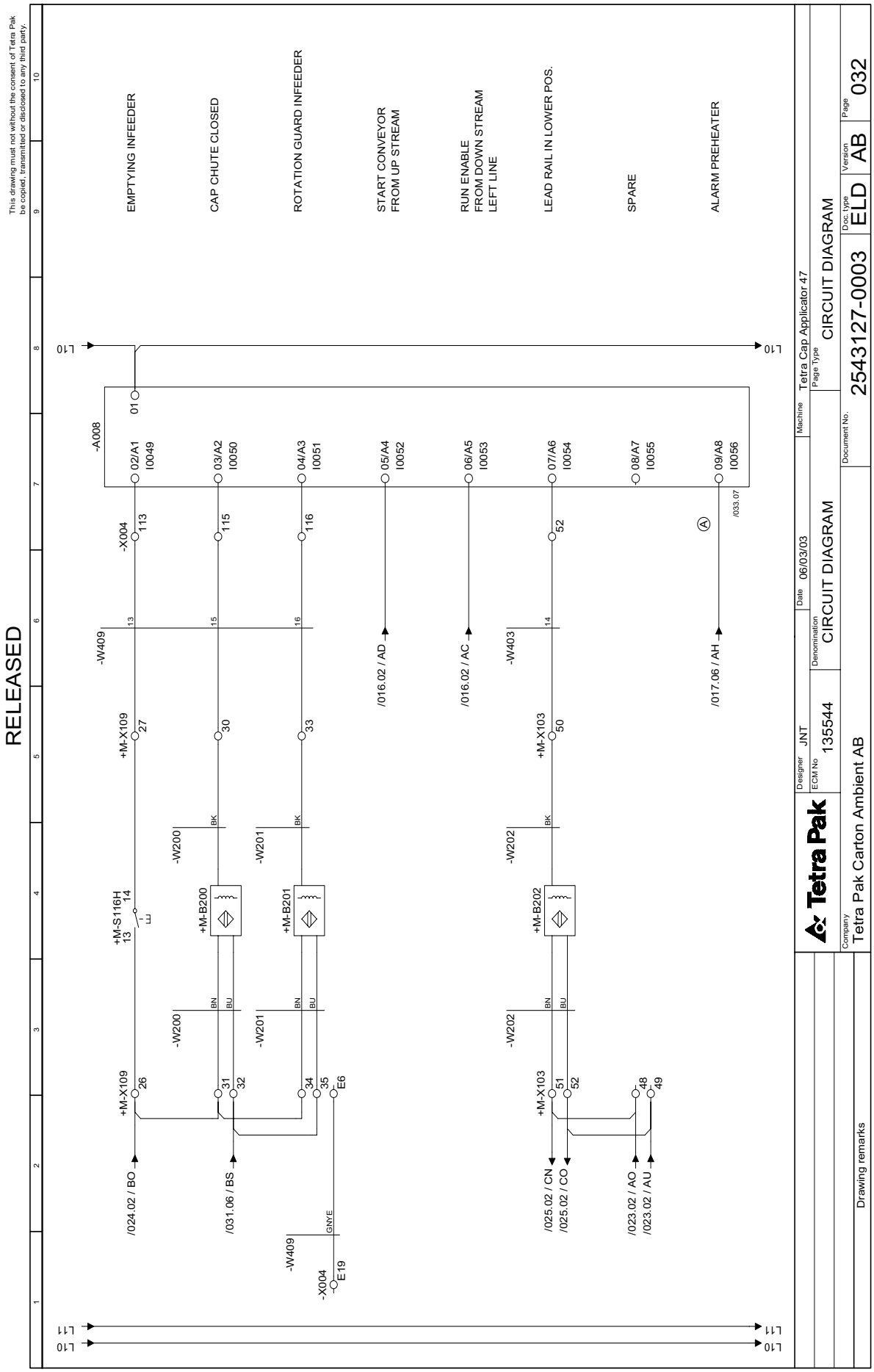

EM1.1TH900620en.fm

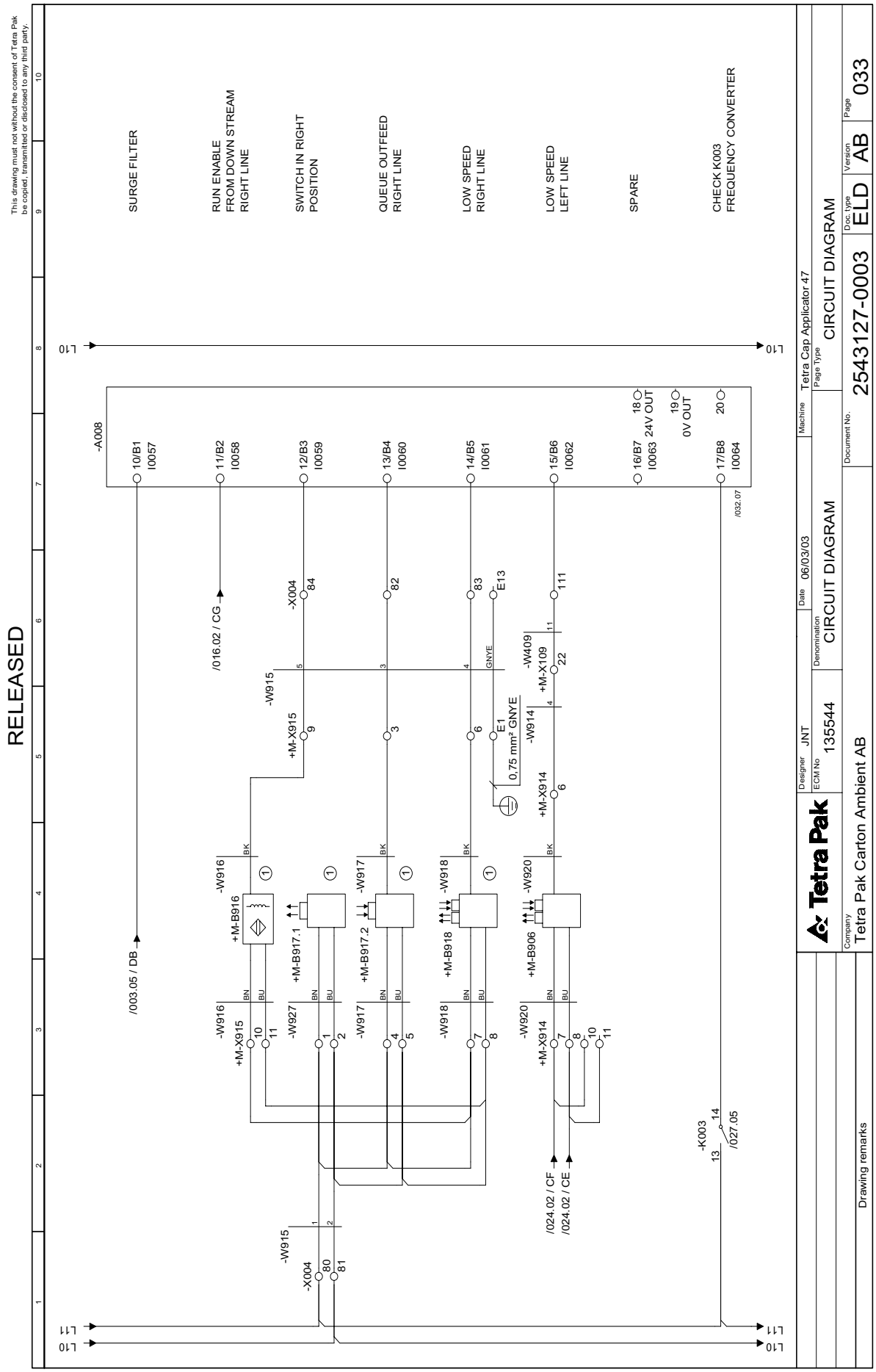

EM1.1TH900620en.fm

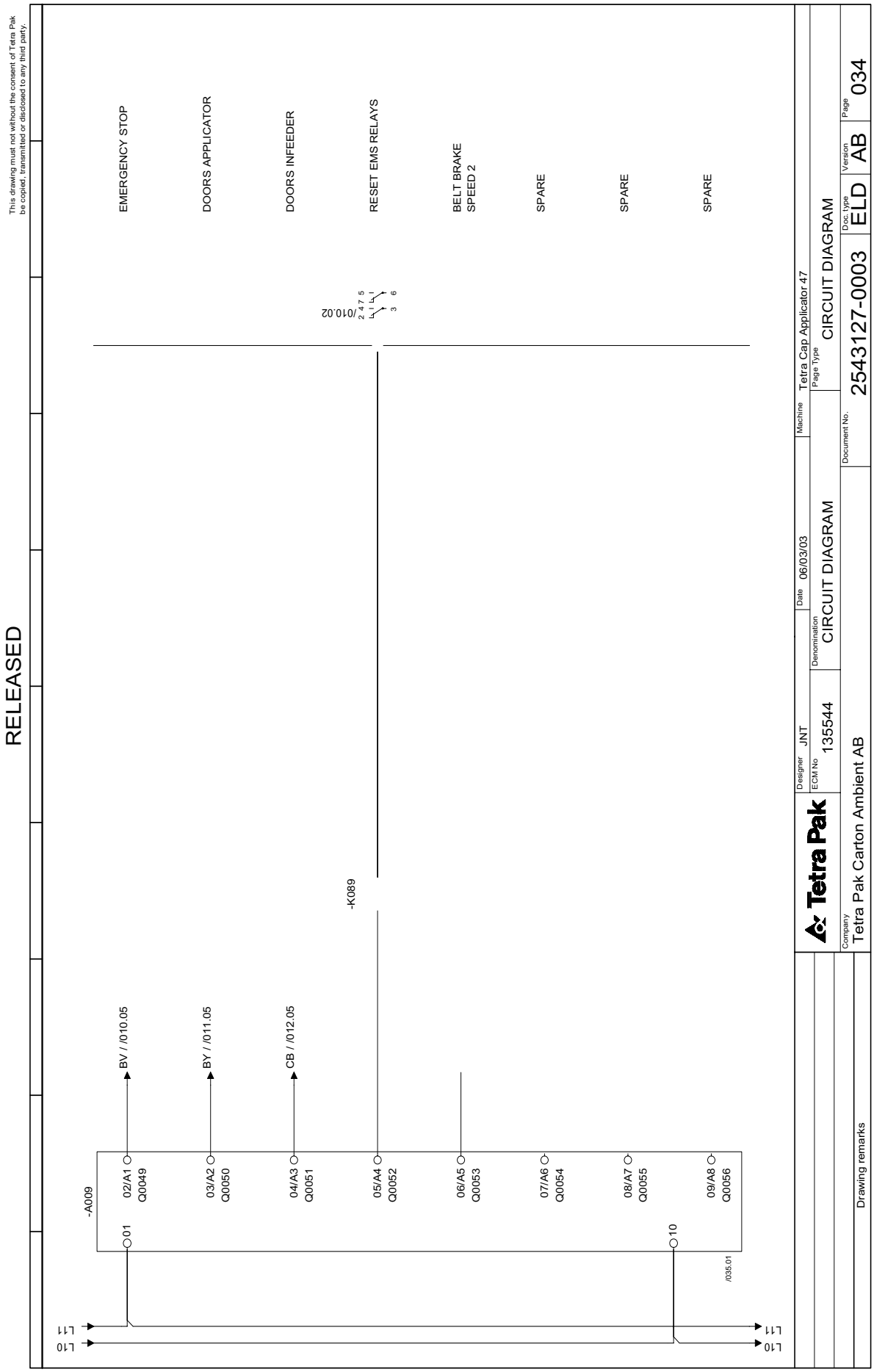

EM1.1TH900620en.fm

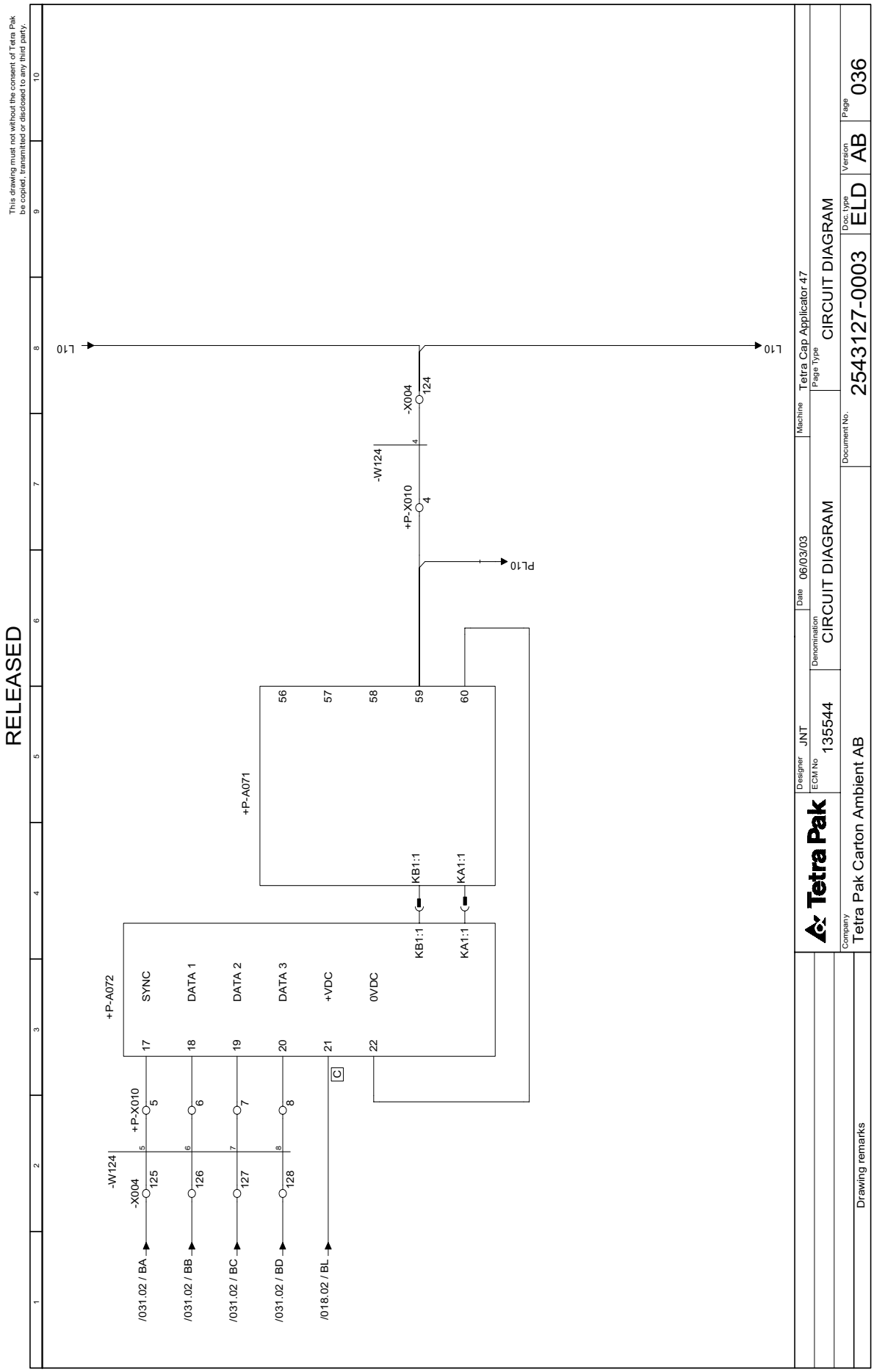

EM1.1TH900620en.fm

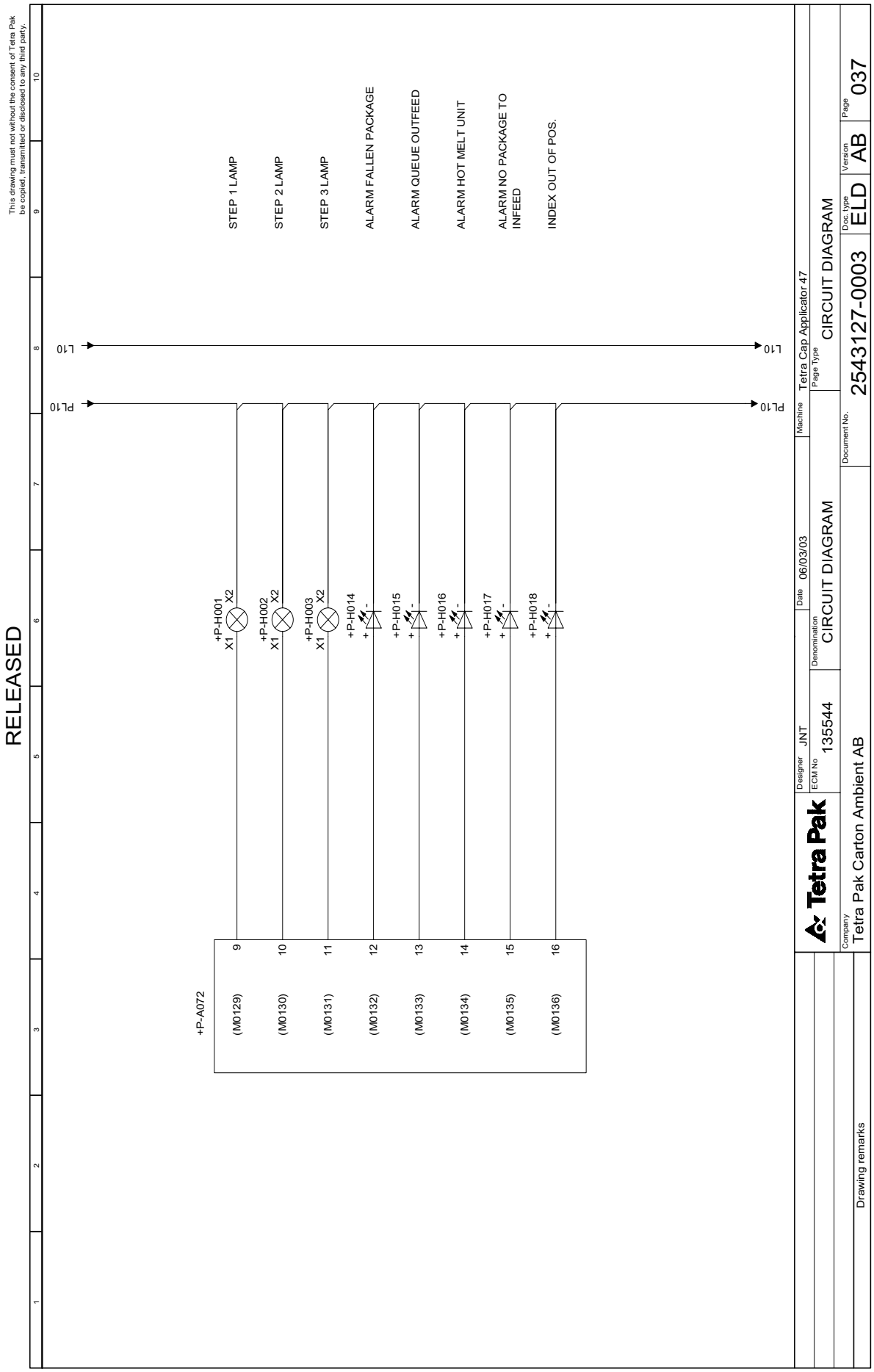

EM1.1TH900620en.fm

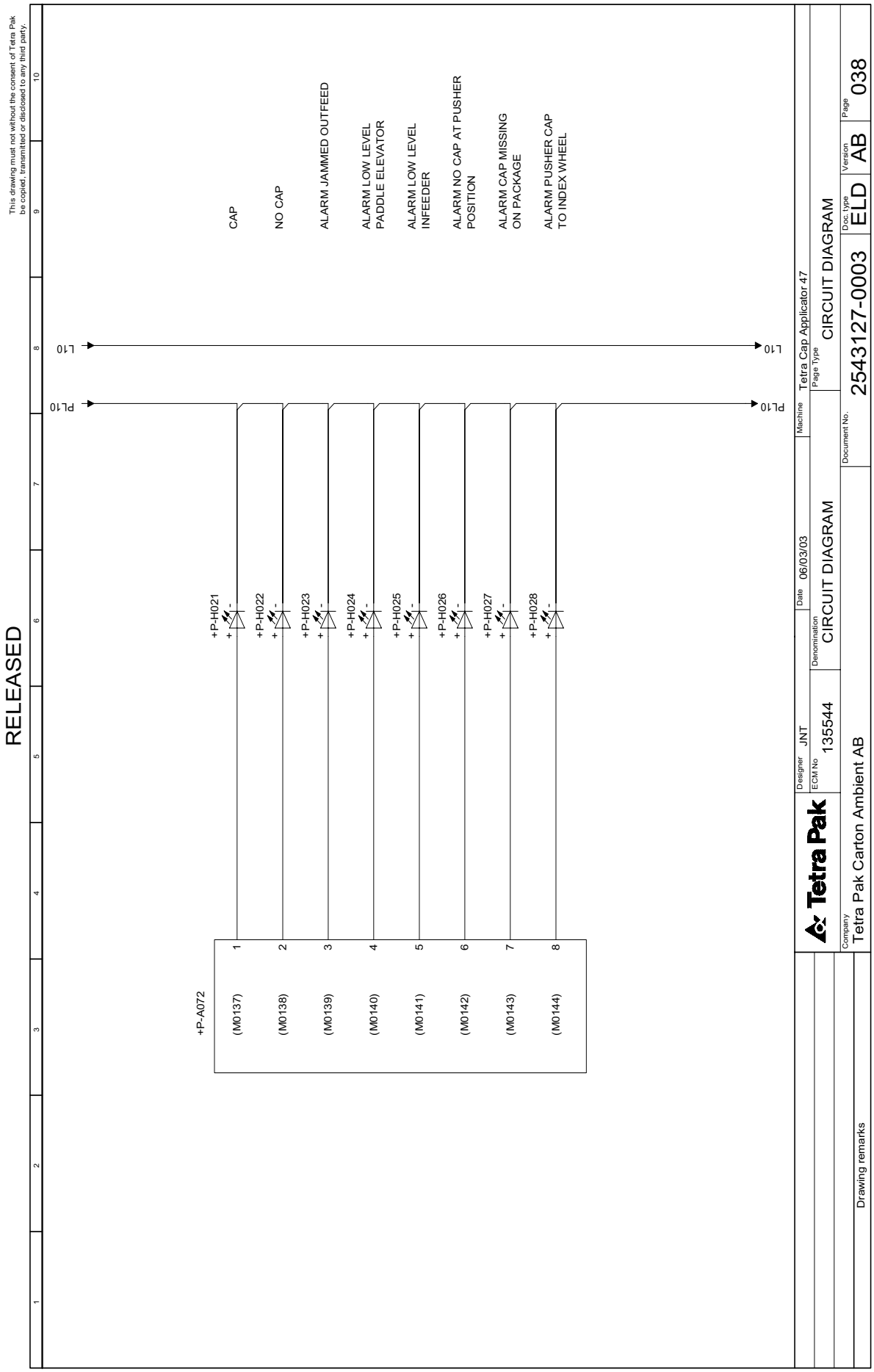

EM1.1TH900620en.fm

EM1.1TH900620en.fm

This drawing must not without the consent of Tetra Pak be copied, transmitted or disclosed to any third party.

Date

Machine Tetra Cap Applicator 47

Denomination CIRCUIT DIAGRAM

E.C.M.No.

Company Tetra Pak Carton Ambient AB

2543127-0003

Doc. type

Page 039

Drawing remarks

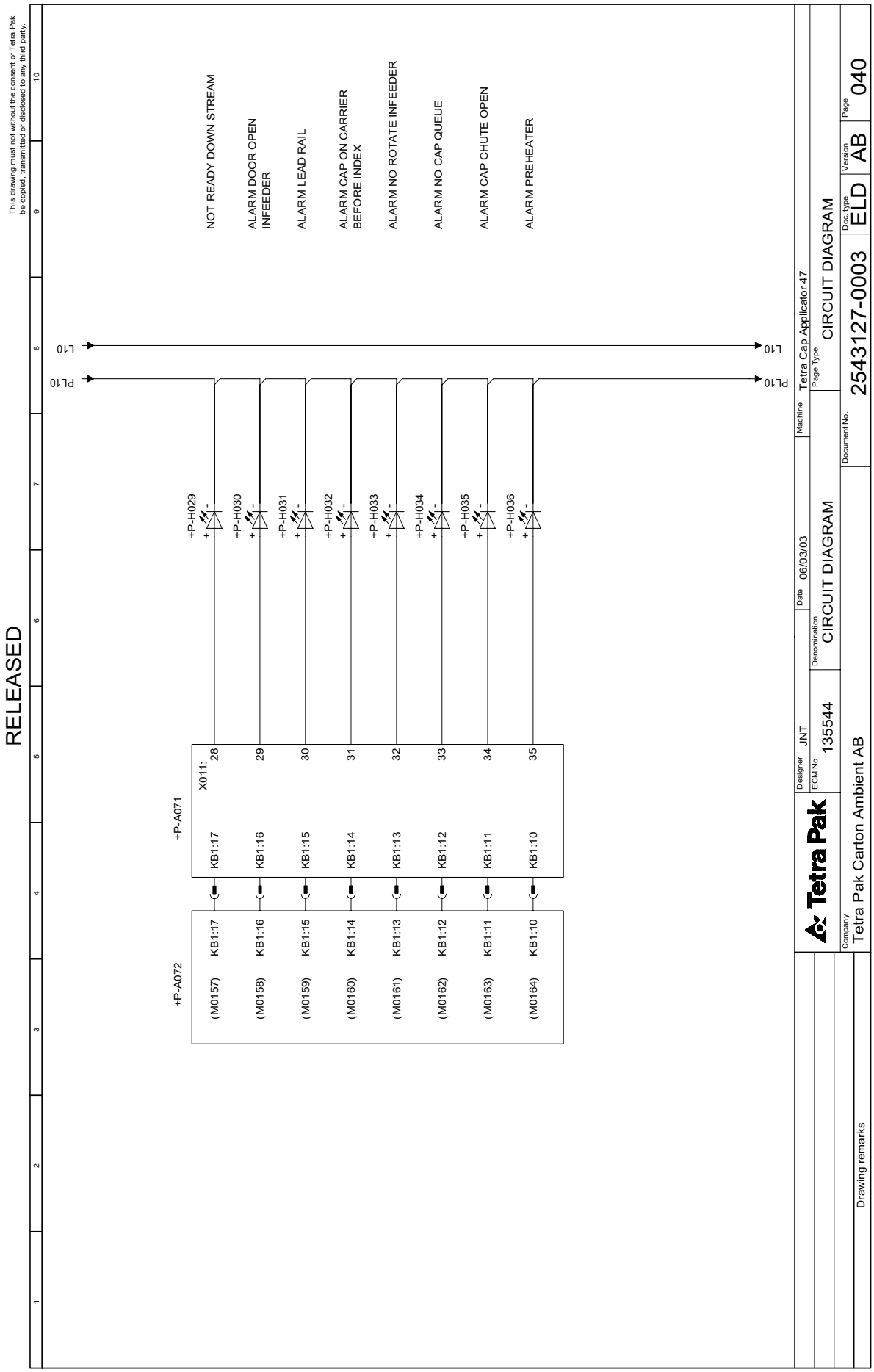

EM1.1TH900620en.fm

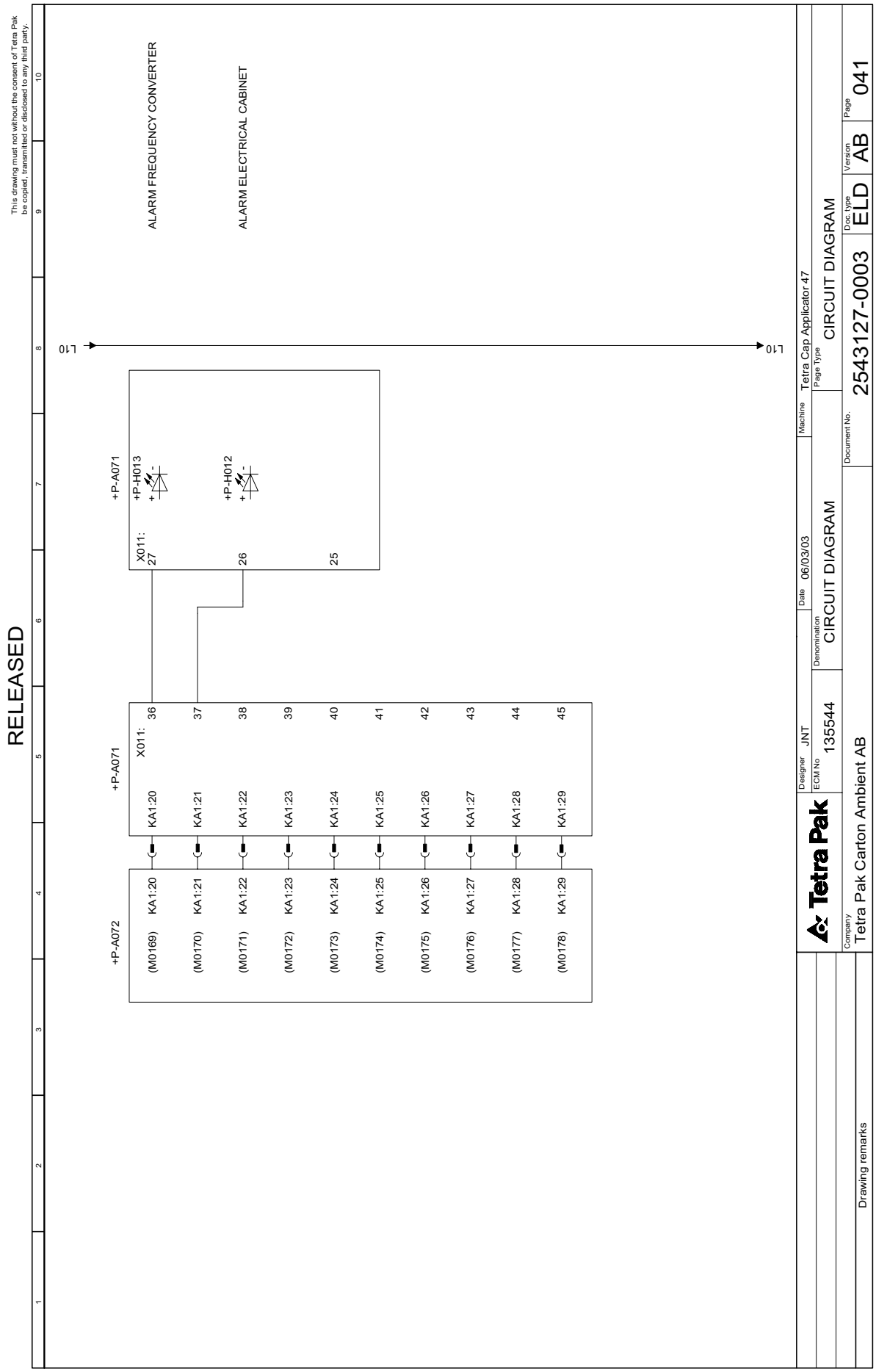
This drawing must not without the consent of Tetra Pak be copied, transmitted or disclosed to any third party.
RELEASED
ALARM FREQUENCY CONVERTER
ALARM ELECTRICAL CABINET
L10
L10
+P-A071
+P-H013
+P-H012
X011:
27
26
25
+P-A071
X011:
36
37
38
39
40
41
42
43
44
45
KA1:20
KA1:21
KA1:22
KA1:23
KA1:24
KA1:25
KA1:26
KA1:27
KA1:28
KA1:29
+P-A072
(M0169) KA1:20
(M0170) KA1:21
(M0171) KA1:22
(M0172) KA1:23
(M0173) KA1:24
(M0174) KA1:25
(M0175) KA1:26
(M0176) KA1:27
(M0177) KA1:28
(M0178) KA1:29
Tetra Pak
Designer JNT
ECM No 135544
Date 06/03/03
Denomination CIRCUIT DIAGRAM
Machine Tetra Cap Applicator 47
Page Type CIRCUIT DIAGRAM
Document No. 2543127-0003
Doc. type ELD
Version AB
Page 041
Company Tetra Pak Carton Ambient AB
Drawing remarks
EM1.1TH900620en.fm

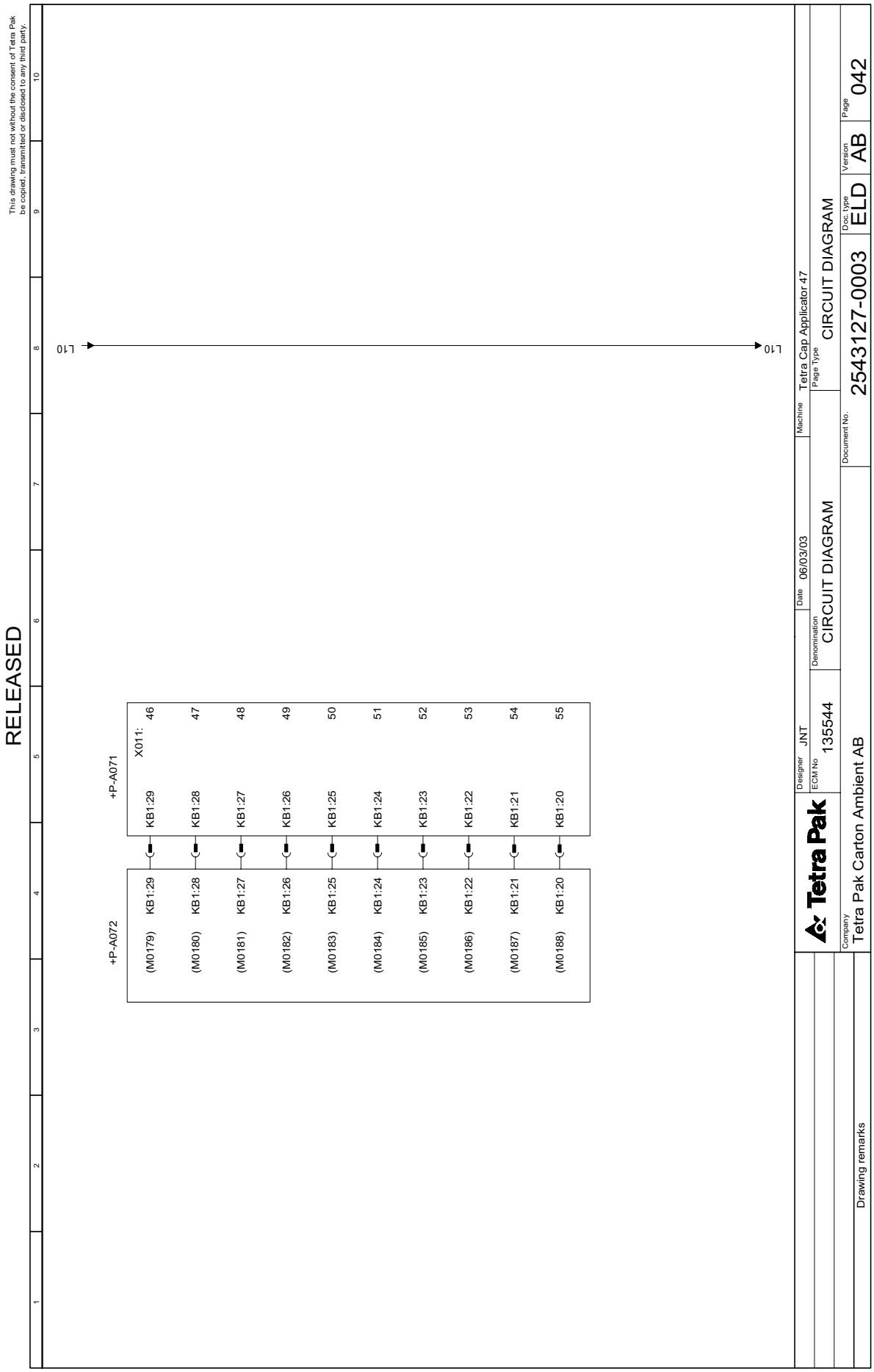

EM1.1TH900620en.fm

Tetra Pak

Drawing remarks

Drawing No.	Note	Remark
2543127-0003:005	6	Ferrites inside according to manual.
2543127-0003:007	2	Connected to cable gland.
2543127-0003:007	3	Connected to shield clamp.
2543127-0003:007	9	Thread wires two turns through ferrites.
2543127-0003:009	2	Connected to cable gland.
2543127-0003:009	3	Connected to shield clamp.
2543127-0003:009	9	Thread wires two turns through ferrites.
2543127-0003:013	1	Optional equipment.
2543127-0003:015	1	Optional equipment.
2543127-0003:016	4	Bridge if no machine is connected.
2543127-0003:016	5	Bridge if no Line communication or no Start conveyor photocell is connected.
2543127-0003:016	8	W990L or W990R.
2543127-0003:023	1	Optional equipment.
2543127-0003:033	1	Optional equipment.

Company.Tetra Pak Ambient AB

Date: 2003-06-03

Ecm 129481	Drawing remarks			
Designer.	Drawing No.	Document type	Version	Page
JNT	2543127-0098	ELD	AB	1(X)

EM1.1TH900620en.fm

This drawing must not without the consent of Tetra Pak be copied, transmitted or disclosed to any third party.

Tetra Pak

EC Description

ECM No.	Drawing No.	Alteration
135544	Doc for Eplan	Released dev step –0100

EM1.1TH900620en.fm

This drawing must not without the consent of Tetra Pak be copied, transmitted or disclosed to any third party.

Company

Issued by/Date:JNT/030603

ECM 129481

Engineering Change Description

Identity	Document type	Version	Page
2543127-0099	ELD	AB	1(X)

This page intentionally left blank

EM1.1TH900621en.fm

RELEASED

This drawing must not without the consent of Tetra Pak be copied, transmitted or disclosed to any third party.

1 2 3 4 5 6 7 8 9 10

Line summary of 2543127-0003

Line	From	Page.Col.	To	Page.Col.	Area/Color	Opt.
L1	+C-Q000:2	003 .2	+C-F000:L1	003 .4	2,5mm² BK	
L1	+C-F000:L1	003 .4	+C-Q010:1	004 .3	2,5mm² BK	
L1	+C-Q010:1	004 .3	+C-K052:1	006 .2	2,5mm² BK	
L1	+C-K052:1	006 .2	+C-K053:1	006 .3	2,5mm² BK	
L1	+C-K053:1	006 .3	+C-K054:1	006 .5	2,5mm² BK	
L1	+C-K054:1	006 .5	+C-F003:2	005 .4	2,5mm² BK	
L1	+C-F003:2	005 .4	+C-F004:2	005 .7	2,5mm² BK	
L2	+C-Q000:4	003 .2	+C-F000:L2	003 .4	2,5mm² BK	
L2	+C-F000:L2	003 .4	+C-Q010:3	004 .3	2,5mm² BK	
L2	+C-Q010:3	004 .3	+C-K052:3	006 .2	2,5mm² BK	
L2	+C-K052:3	006 .2	+C-K053:3	006 .3	2,5mm² BK	
L2	+C-K053:3	006 .3	+C-K054:3	006 .5	2,5mm² BK	
L2	+C-K054:3	006 .5	+C-F001:2	004 .5	2,5mm² BK	
L2	+C-F001:2	004 .5	+C-F004:4	005 .8	2,5mm² BK	
L2	+C-F004:4	005 .8	+C-F008:2	003 .6	2,5mm² BK	
L3	+C-Q000:6	003 .2	+C-F000:L3	003 .4	2,5mm² BK	
L3	+C-F000:L3	003 .4	+C-Q010:5	004 .3	2,5mm² BK	
L3	+C-Q010:5	004 .3	+C-K052:5	006 .2	2,5mm² BK	
L3	+C-K052:5	006 .2	+C-K053:5	006 .3	2,5mm² BK	
L3	+C-K053:5	006 .3	+C-K054:5	006 .5	2,5mm² BK	
L3	+C-K054:5	006 .5	+C-F003:4	005 .4	2,5mm² BK	
L3	+C-F003:4	005 .4	+C-F007:2	005 .2	2,5mm² BK	
L7	+C-K053:2	006 .3	+C-Q001:1	008 .3	2,5mm² BK	
L7	+C-Q001:1	008 .3	+C-Q022:1	008 .7	2,5mm² BK	
L7:1	+C-K054:2	006 .5	+C-F010:2	009 .4	2,5mm² BK	
L7:1	+C-F010:2	009 .4	+C-Q020:1	009 .9	2,5mm² BK	
L8	+C-K053:4	006 .3	+C-Q001:3	008 .3	2,5mm² BK	
L8	+C-Q001:3	008 .3	+C-Q022:3	008 .7	2,5mm² BK	

Line	From	Page.Col.	To	Page.Col.	Area/Color	Opt.
L8	+C-Q022:3	008 .7	+C-F005:2	007 .7	2,5mm² BK	
L8:1	+C-K054:4	006 .5	+C-Q020:3	009 .9	2,5mm² BK	
L9	+C-K053:6	006 .3	+C-Q001:5	008 .3	2,5mm² BK	
L9	+C-Q001:5	008 .3	+C-Q022:5	008 .7	2,5mm² BK	
L9	+C-Q022:5	008 .7	+C-F002:2	007 .3	2,5mm² BK	
L9:1	+C-K054:6	006 .5	+C-Q020:5	009 .9	2,5mm² BK	
L10	+C-XL010:1	001 .1	+C-G011:-	003 .9	1,5mm² BK	
L10	+C-G011:-	003 .9	+C-X002:E10	005 .3	1,5mm² BK	
L10	+C-XL010:2	001 .1	+C-A002:01	020 .8	0,75mm² BK	
L10	+C-XL010:3	001 .2	+C-A003:01	022 .8	0,75mm² BK	
L10	+C-XL010:4	001 .2	+C-A004:01	024 .8	0,75mm² BK	
L10	+C-XL010:5	001 .2	+C-A005:10	026 .1	0,75mm² BK	
L10	+C-A005:10	026 .1	+C-A005:20	027 .1	0,75mm² BK	
L10	+C-XL010:6	001 .3	+C-A006:10	028 .1	0,75mm² BK	
L10	+C-A006:10	028 .1	+C-A006:20	029 .1	0,75mm² BK	
L10	+C-XL010:7	001 .3	+C-A007:10	030 .1	0,75mm² BK	
L10	+C-A007:10	030 .1	+C-A007:20	031 .1	0,75mm² BK	
L10	+C-XL010:8	001 .3	+C-A008:01	032 .8	0,75mm² BK	
L10	+C-XL010:9	001 .3	+C-A009:10	034 .1	0,75mm² BK	
L10	+C-A009:10	034 .1	+C-A009:20	035 .1	0,75mm² BK	
L10	+C-XL010:10	001 .4	+C-K018:A2	015 .4	0,75mm² BK	
L10	+C-K018:A2	015 .4	+C-K019:A2	030 .5	0,75mm² BK	
L10	+C-K019:A2	030 .5	+C-P001:-	029 .5	0,75mm² BK	
L10	+C-XL010:11	001 .4	+C-A052:A2	010 .5	0,75mm² BK	
L10	+C-A052:A2	010 .5	+C-A053:A2	011 .5	0,75mm² BK	
L10	+C-A053:A2	011 .5	+C-A054:A2	012 .5	0,75mm² BK	
L10	+C-XL010:12	001 .4	+C-K002:A2	028 .5	0,75mm² BK	
L10	+C-K002:A2	028 .5	+C-K003:A2	027 .5	0,75mm² BK	

Drawing remarks

Tetra Pak

Designer	Date	Machine
JNT	06/03/03	Tetra Cap Applicator 47

ECM No	Denomination	Page Type
135544	LINE SUMMARY	LINE SUMMARY

Company	Document No.	Doc. type	Version	Page
Tetra Pak Carton Ambient AB	2543127-0004	ELD	AB	001

RELEASED

This drawing must not without the consent of Tetra Pak be copied, transmitted or disclosed to any third party.

1 2 3 4 5 6 7 8 9 10

Line summary of 2543127-0003

Line	From	Page.Col.	To	Page.Col.	Area/Color	Opt.
L10	+C-K003:A2	027 .5	+C-K004:A2	028 .5	0,75mm² BK	
L10	+C-K004:A2	028 .5	+C-K006:A2	030 .5	0,75mm² BK	
L10	+C-K006:A2	030 .5	+C-K052:A2	010 .7	0,75mm² BK	
L10	+C-K052:A2	010 .7	+C-K053:A2	011 .7	0,75mm² BK	
L10	+C-K053:A2	011 .7	+C-K054:A2	012 .7	0,75mm² BK	
L10	+C-K054:A2	012 .7	+C-K089:1	034 .4	0,75mm² BK	
L10	+C-K089:1	034 .4	+C-K001:A2	028 .5	0,75mm² BK	
L10	+C-K001:A2	028 .5	+C-K010:A2	030 .5	0,75mm² BK	
L10	+C-K010:A2	030 .5	+C-K020:A2	027 .5	0,75mm² BK	
L10	+C-K020:A2	027 .5	+C-K022:A2	028 .5	0,75mm² BK	
L10	+C-K022:A2	028 .5	+C-G010:SC	009 .4	0,75mm² BK	
L10	+C-XL010:13	001 .5	+C-X004:3	023 .2	0,75mm² BK	
L10	+C-X004:3	023 .2	+C-X004:8	014 .1	0,75mm² BK	
L10	+C-X004:8	014 .1	+C-X004:11	030 .7	0,75mm² BK	
L10	+C-X004:11	030 .7	+C-X004:28	022 .4	0,75mm² BK	
L10	+C-X004:28	022 .4	+C-X004:41	024 .1	0,75mm² BK	
L10	+C-X004:41	024 .1	+C-X004:70	026 .7	0,75mm² BK	
L10	+C-X004:70	026 .7	+C-X004:71	029 .7	0,75mm² BK	
L10	+C-X004:71	029 .7	+C-X004:81	033 .1	0,75mm² BK	
L10	+C-X004:81	033 .1	+C-X004:88	031 .7	0,75mm² BK	
L10	+C-XL010:14	001 .5	+C-X004:96	015 .5	0,75mm² BK	
L10	+C-X004:96	015 .5	+C-X004:99	021 .1	0,75mm² BK	
L10	+C-X004:99	021 .1	+C-X004:104	014 .2	0,75mm² BK	
L10	+C-X004:104	014 .2	+C-X004:108	031 .7	0,75mm² BK	
L10	+C-X004:108	031 .7	+C-X004:124	036 .8	0,75mm² BK	
L10	+C-X004:124	036 .8	+C-X004:143	013 .1	0,75mm² BK	
L10	+C-X004:143	013 .1	+C-X090:3	016 .2	0,75mm² BK	
L10	+C-X090:3	016 .2	+C-K098:1	029 .5	0,75mm² BK	

Line	From	Page.Col.	To	Page.Col.	Area/Color	Opt.
L10	+C-K098:1	029 .5	+C-K099:1	030 .5	0,75mm² BK	
L10	+C-XL010:15	001 .5	+C-G002:SC	007 .2	0,75mm² BK	
L10	+C-XL010:16	001 .6	+C-G005:SC	007 .7	0,75mm² BK	
L11	+C-XL011:1	001 .1	+C-F006:1	003 .9	1,5mm² BK	
L11	+C-XL011:2	001 .1	+C-A007:01	030 .1	0,75mm² BK	
L11	+C-A007:01	030 .1	+C-A007:11	031 .1	0,75mm² BK	
L11	+C-XL011:3	001 .2	+C-A009:01	034 .1	0,75mm² BK	
L11	+C-A009:01	034 .1	+C-A009:11	035 .1	0,75mm² BK	
L11	+C-XL011:4	001 .2	+C-K019:6	015 .2	0,75mm² BK	
L11	+C-K019:6	015 .2	+C-A080:12	017 .4	0,75mm² BK	
L11	+C-A080:12	017 .4	+C-A081:12	017 .4	0,75mm² BK	
L11	+C-XL011:5	001 .2	+C-A052:A1	010 .5	0,75mm² BK	
L11	+C-A052:A1	010 .5	+C-A052:13	010 .5	0,75mm² BK	
L11	+C-A052:13	010 .5	+C-A052:23	010 .5	0,75mm² BK	
L11	+C-A052:23	010 .5	+C-A053:A1	011 .5	0,75mm² BK	
L11	+C-A053:A1	011 .5	+C-A054:A1	012 .5	0,75mm² BK	
L11	+C-A054:A1	012 .5	+C-K089:4	010 .2	0,75mm² BK	
L11	+C-XL011:6	001 .3	+C-X004:2	023 .2	0,75mm² BK	
L11	+C-X004:2	023 .2	+C-X004:7	014 .1	0,75mm² BK	
L11	+C-X004:7	014 .1	+C-X004:14	025 .1	0,75mm² BK	
L11	+C-X004:14	025 .1	+C-X004:27	022 .4	0,75mm² BK	
L11	+C-X004:27	022 .4	+C-X004:40	024 .1	0,75mm² BK	
L11	+C-X004:40	024 .1	+C-X004:78	025 .1	0,75mm² BK	
L11	+C-X004:78	025 .1	+C-X004:80	033 .1	0,75mm² BK	
L11	+C-X004:80	033 .1	+C-X004:98	021 .1	0,75mm² BK	
L11	+C-X004:98	021 .1	+C-X004:103	014 .2	0,75mm² BK	
L11	+C-X004:103	014 .2	+C-X004:105	021 .1	0,75mm² BK	
L11	+C-X004:105	021 .1	+C-X004:123	018 .1	0,75mm² BK	

Drawing remarks

Tetra Pak

Designer	Date	Machine
JNT	06/03/03	Tetra Cap Applicator 47

ECM No	Denomination	Page Type
135544	LINE SUMMARY	LINE SUMMARY

Company	Document No.	Doc. type	Version	Page
Tetra Pak Carton Ambient AB	2543127-0004	ELD	AB	002

RELEASED

This drawing must not without the consent of Tetra Pak be copied, transmitted or disclosed to any third party.

1 2 3 4 5 6 7 8 9 10

Line summary of 2543127-0003

Line	From	Page.Col.	To	Page.Col.	Area/Color	Opt.
L11	+C-X004:123	018 .1	+C-X004:141	013 .1	0,75mm² BK	
L11	+C-XL011:7	001 .3	+C-X090:2	016 .2	0,75mm² BK	
L11	+C-X090:2	016 .2	+C-X090:6	016 .2	0,75mm² BK	
L11	+C-X090:6	016 .2	+C-X090:8	016 .2	0,75mm² BK	
L11	+C-XL011:8	001 .3	+C-G002:MC	007 .2	0,75mm² BK	
L11	+C-XL011:9	001 .4	+C-Q001:14	020 .2	0,75mm² BK	
L11	+C-Q001:14	020 .2	+C-S018:13	015 .2	0,75mm² BK	
L11	+C-S018:13	015 .2	+C-K002:13	021 .2	0,75mm² BK	
L11	+C-K002:13	021 .2	+C-K003:13	033 .2	0,75mm² BK	
L11	+C-K003:13	033 .2	+C-F000:11	003 .4	0,75mm² BK	
L12	+C-XL012:1	002 .1	+C-A052:24	010 .5	0,75mm² BK	
L12	+C-XL012:2	002 .1	+C-A053:13	011 .5	0,75mm² BK	
L12	+C-A053:13	011 .5	+C-A053:23	011 .5	0,75mm² BK	
L12	+C-XL012:3	002 .2	+C-A002:I0001	020 .7	0,75mm² BK	
L12	+C-XL012:4	002 .2	+C-A006:11	029 .1	0,75mm² BK	
L13	+C-XL013:1	002 .4	+C-A053:24	011 .5	0,75mm² BK	
L13	+C-XL013:2	002 .4	+C-A054:13	012 .5	0,75mm² BK	
L13	+C-A054:13	012 .5	+C-A054:23	012 .5	0,75mm² BK	
L13	+C-XL013:3	002 .4	+C-K001:13	015 .2	0,75mm² BK	
L13	+C-XL013:4	002 .4	+C-A002:I0013	021 .7	0,75mm² BK	
L13	+C-XL013:5	002 .5	+C-A005:01	026 .1	0,75mm² BK	
L13	+C-XL013:6	002 .5	+C-A006:01	028 .1	0,75mm² BK	
L14	+C-XL014:1	002 .6	+C-A054:24	012 .5	0,75mm² BK	
L14	+C-XL014:2	002 .7	+C-A003:I0031	023 .7	0,75mm² BK	
L14	+C-XL014:3	002 .7	+C-A005:11	027 .1	0,75mm² BK	
N	+C-Q000:N	003 .2	+C-F000:N	003 .4	2,5mm² BK	
N	+C-F000:N	003 .4	+C-X003:N	003 .5	2,5mm² BK	
PL10	+P-X010:4	036 .7	+P-A071:59	036 .6	0,75mm² BK	

Line	From	Page.Col.	To	Page.Col.	Area/Color	Opt.
PL10	+P-A071:59	036 .6	+P-H001:X2	037 .6	0,75mm² BK	
PL10	+P-H001:X2	037 .6	+P-H002:X2	037 .6	0,75mm² BK	
PL10	+P-H002:X2	037 .6	+P-H003:X2	037 .6	0,75mm² BK	
PL10	+P-H003:X2	037 .6	+P-H029:-	040 .7	0,75mm² BK	
PL10	+P-H029:-	040 .7	+P-H015:-	037 .6	0,75mm² BK	
PL10	+P-H015:-	037 .6	+P-H027:-	038 .6	0,75mm² BK	
PL10	+P-H027:-	038 .6	+P-H024:-	038 .6	0,75mm² BK	
PL10	+P-H024:-	038 .6	+P-H030:-	040 .7	0,75mm² BK	
PL10	+P-H030:-	040 .7	+P-H025:-	038 .6	0,75mm² BK	
PL10	+P-H025:-	038 .6	+P-H033:-	040 .7	0,75mm² BK	
PL10	+P-H033:-	040 .7	+P-H035:-	040 .7	0,75mm² BK	
PL10	+P-H035:-	040 .7	+P-H034:-	040 .7	0,75mm² BK	
PL10	+P-H034:-	040 .7	+P-H023:-	038 .6	0,75mm² BK	
PL10	+P-H023:-	038 .6	+P-H032:-	040 .7	0,75mm² BK	
PL10	+P-H032:-	040 .7	+P-H026:-	038 .6	0,75mm² BK	
PL10	+P-H026:-	038 .6	+P-H031:-	040 .7	0,75mm² BK	
PL10	+P-H031:-	040 .7	+P-H028:-	038 .6	0,75mm² BK	
PL10	+P-H028:-	038 .6	+P-H018:-	037 .6	0,75mm² BK	
PL10	+P-H018:-	037 .6	+P-H016:-	037 .6	0,75mm² BK	
PL10	+P-H016:-	037 .6	+P-H036:-	040 .7	0,75mm² BK	
PL10	+P-H036:-	040 .7	+P-H017:-	037 .6	0,75mm² BK	
PL10	+P-H017:-	037 .6	+P-H014:-	037 .6	0,75mm² BK	
PL10	+P-H014:-	037 .6	+P-H021:-	038 .6	0,75mm² BK	
PL10	+P-H021:-	038 .6	+P-H022:-	038 .6	0,75mm² BK	

Drawing remarks

Tetra Pak

Designer	Date	Machine
JNT	06/03/03	Tetra Cap Applicator 47

ECM No	Denomination	Page Type
135544	LINE SUMMARY	LINE SUMMARY

Company	Document No.	Doc. type	Version	Page
Tetra Pak Carton Ambient AB	2543127-0004	ELD	AB	003

This page intentionally left blank

EM1.1TH900621en.fm

9 Cabinet terminal summary

EM1.1TH900622en.fm

This page intentionally left blank

EM1.1TH900622en.fm

9 Cabinet terminal summary

RELEASED

This drawing must not without the consent of Tetra Pak be copied, transmitted or disclosed to any third party.

1 2 3 4 5 6 7 8 9 10

Cabinet terminal summary of 2543127-0003

Terminal	Page .Col.	Opt.
+C-X002:1	008 .3	
+C-X002:2	008 .3	
+C-X002:3	008 .3	
+C-X002:7		SPARE
+C-X002:8		SPARE
+C-X002:9		SPARE
+C-X002:10	004 .3	
+C-X002:11	004 .3	
+C-X002:12	004 .3	
+C-X002:13	009 .9	
+C-X002:14	009 .9	
+C-X002:15	009 .9	
+C-X002:16		SPARE
+C-X002:17		SPARE
+C-X002:18		SPARE
+C-X002:19	008 .7	
+C-X002:20	008 .8	
+C-X002:21	008 .8	
+C-X002:22	005 .4	
+C-X002:23	005 .5	
+C-X002:24	005 .5	
+C-X002:25	005 .7	
+C-X002:26	005 .8	
+C-X002:27	005 .9	
+C-X002:28	005 .2	
+C-X002:29	005 .3	
+C-X002:30	004 .5	
+C-X002:31	004 .5	

Terminal	Page .Col.	Opt.
+C-X002:E1	003 .3	
+C-X002:E2	008 .4	
+C-X002:E3	004 .1	
+C-X002:E4	004 .3	
+C-X002:E5	009 .9	
+C-X002:E6	003 .10	
+C-X002:E7	008 .8	
+C-X002:E8	005 .5	
+C-X002:E9	005 .9	
+C-X002:E10	005 .3	
+C-X002:E11		SPARE
+C-X003:1	004 .5	
+C-X003:2	007 .3	
+C-X003:3	005 .5	
+C-X003:4	005 .9	
+C-X003:5	007 .8	
+C-X003:7	005 .3	
+C-X003:8	003 .6	
+C-X003:10	009 .4	
+C-X003:N	003 .5	
+C-X004:1	023 .7	
+C-X004:2	023 .2	
+C-X004:3	023 .2	
+C-X004:4	023 .7	
+C-X004:5	023 .7	
+C-X004:6	023 .7	
+C-X004:7	014 .1	
+C-X004:8	014 .1	

Terminal	Page .Col.	Opt.
+C-X004:9	030 .3	
+C-X004:10	030 .3	
+C-X004:11	030 .7	
+C-X004:12	026 .3	
+C-X004:13		SPARE
+C-X004:14	025 .1	
+C-X004:15		SPARE
+C-X004:16	025 .7	
+C-X004:17	026 .3	
+C-X004:18	025 .7	
+C-X004:19	025 .7	
+C-X004:20	014 .10	
+C-X004:21	014 .10	
+C-X004:22	030 .7	
+C-X004:23	030 .7	
+C-X004:24		SPARE
+C-X004:25		SPARE
+C-X004:26		SPARE
+C-X004:27	022 .4	
+C-X004:28	022 .4	
+C-X004:29	022 .4	
+C-X004:30	022 .4	
+C-X004:31	022 .4	
+C-X004:32	022 .4	
+C-X004:33	022 .4	
+C-X004:34	022 .4	
+C-X004:35	022 .4	
+C-X004:36	022 .4	

Terminal	Page .Col.	Opt.
+C-X004:37	022 .4	
+C-X004:38		SPARE
+C-X004:39	024 .7	
+C-X004:40	024 .1	
+C-X004:41	024 .1	
+C-X004:42	024 .7	
+C-X004:43	024 .7	
+C-X004:44	029 .3	
+C-X004:45	020 .6	
+C-X004:46	024 .7	
+C-X004:47	024 .7	
+C-X004:48	013 .3	
+C-X004:49	013 .3	
+C-X004:50	023 .7	
+C-X004:51	023 .7	
+C-X004:52	032 .7	
+C-X004:53	013 .7	
+C-X004:54	013 .7	
+C-X004:55	025 .7	
+C-X004:56	025 .7	
+C-X004:57		SPARE
+C-X004:58		SPARE
+C-X004:59	026 .3	
+C-X004:60	026 .3	
+C-X004:61	026 .3	
+C-X004:62	026 .3	
+C-X004:63	026 .3	
+C-X004:64	029 .3	

Drawing remarks	Tetra Pak	Designer JNT	Date 06/03/03	Machine Tetra Cap Applicator 47	
		ECM No 135544	Denomination CABINET TERMINAL SUMMARY	Page Type CABINET TERMINAL SUMMARY	
		Company Tetra Pak Carton Ambient AB	Document No. 2543127-0005	Doc. type ELD / Version AB	Page 001

RELEASED

This drawing must not without the consent of Tetra Pak be copied, transmitted or disclosed to any third party.

1 2 3 4 5 6 7 8 9 10

Cabinet terminal summary of 2543127-0003

Terminal	Page .Col.	Opt.
+C-X004:65	029 .3	
+C-X004:66	029 .3	
+C-X004:67	029 .3	
+C-X004:68	029 .3	
+C-X004:69	029 .3	
+C-X004:70	026 .7	
+C-X004:71	029 .7	
+C-X004:72		SPARE
+C-X004:73		SPARE
+C-X004:74		SPARE
+C-X004:75		SPARE
+C-X004:76		SPARE
+C-X004:77	025 .7	
+C-X004:78	025 .1	
+C-X004:79		SPARE
+C-X004:80	033 .1	
+C-X004:81	033 .1	
+C-X004:82	033 .6	
+C-X004:83	033 .6	
+C-X004:84	033 .6	
+C-X004:85	031 .3	
+C-X004:86	031 .3	
+C-X004:87	031 .3	
+C-X004:88	031 .7	
+C-X004:89		SPARE
+C-X004:90		SPARE
+C-X004:91		SPARE
+C-X004:92		SPARE

Terminal	Page .Col.	Opt.
+C-X004:93	013 .2	
+C-X004:94	013 .4	
+C-X004:95	015 .4	
+C-X004:96	015 .5	
+C-X004:97	021 .6	
+C-X004:98	021 .1	
+C-X004:99	021 .1	
+C-X004:100	021 .6	
+C-X004:101	030 .3	
+C-X004:102	030 .3	
+C-X004:103	014 .2	
+C-X004:104	014 .2	
+C-X004:105	021 .1	
+C-X004:106	021 .6	
+C-X004:107	031 .3	
+C-X004:108	031 .7	
+C-X004:109	024 .7	
+C-X004:110	024 .7	
+C-X004:111	033 .6	
+C-X004:112	024 .7	
+C-X004:113	032 .7	
+C-X004:114	030 .3	
+C-X004:115	032 .7	
+C-X004:116	032 .7	
+C-X004:117	014 .8	
+C-X004:118	014 .8	
+C-X004:119	013 .2	
+C-X004:120	013 .4	

Terminal	Page .Col.	Opt.
+C-X004:121	013 .4	
+C-X004:122	013 .7	
+C-X004:123	018 .1	
+C-X004:124	036 .8	
+C-X004:125	036 .2	
+C-X004:126	036 .2	
+C-X004:127	036 .2	
+C-X004:128	036 .2	
+C-X004:129	020 .6	
+C-X004:130	020 .6	
+C-X004:131	020 .6	
+C-X004:132	020 .6	
+C-X004:133	021 .6	
+C-X004:134	013 .4	
+C-X004:135	013 .7	
+C-X004:137	021 .6	
+C-X004:138	021 .6	
+C-X004:139		SPARE
+C-X004:140		SPARE
+C-X004:141	013 .1	
+C-X004:142	013 .2	
+C-X004:143	013 .1	
+C-X004:144	013 .2	
+C-X004:145		SPARE
+C-X004:146		SPARE
+C-X004:147		SPARE
+C-X004:148		SPARE
+C-X004:149		SPARE

Terminal	Page .Col.	Opt.
+C-X004:150		SPARE
+C-X004:E1	023 .2	
+C-X004:E2		SPARE
+C-X004:E3	014 .10	
+C-X004:E4		SPARE
+C-X004:E5	022 .4	
+C-X004:E6		SPARE
+C-X004:E7	013 .7	
+C-X004:E8		SPARE
+C-X004:E9	026 .7	
+C-X004:E10		SPARE
+C-X004:E11		SPARE
+C-X004:E12		SPARE
+C-X004:E13	033 .6	
+C-X004:E14	031 .5	
+C-X004:E15		SPARE
+C-X004:E16	015 .5	
+C-X004:E17	030 .7	
+C-X004:E18		SPARE
+C-X004:E19	032 .1	
+C-X004:E20		SPARE
+C-X004:E21		SPARE
+C-X004:E22	021 .6	
+C-X004:E23		SPARE
+C-X004:E24	003 .1	
+C-X004:E25	003 .2	
+C-X090:1	016 .2	
+C-X090:2	016 .2	

Drawing remarks

Tetra Pak

Designer	Date	Machine
JNT	06/03/03	Tetra Cap Applicator 47

ECM No	Denomination	Page Type
135544	CABINET TERMINAL SUMMARY	CABINET TERMINAL SUMMARY

Company	Document No.	Doc. type	Version	Page
Tetra Pak Carton Ambient AB	2543127-0005	ELD	AB	002

RELEASED

This drawing must not without the consent of Tetra Pak be copied, transmitted or disclosed to any third party.

1 2 3 4 5 6 7 8 9 10

Cabinet terminal summary of 2543127-0003

Terminal	Page .Col.	Opt.
+C-X090:3	016 .2	
+C-X090:4		SPARE
+C-X090:5	016 .2	
+C-X090:6	016 .2	
+C-X090:7	016 .2	
+C-X090:8	016 .2	
+C-X090:E1		SPARE
+C-X090:E2	016 .2	
+C-X090:E3	016 .2	
+C-X090:E4	016 .2	

Terminal	Page .Col.	Opt.

Terminal	Page .Col.	Opt.

Terminal	Page .Col.	Opt.

Drawing remarks

Tetra Pak	Designer JNT	Date 06/03/03	Machine Tetra Cap Applicator 47		
	ECM No 135544	Denomination CABINET TERMINAL SUMMARY	Page Type CABINET TERMINAL SUMMARY		
	Company Tetra Pak Carton Ambient AB	Document No. 2543127-0005	Doc. type ELD	Version AB	Page 003

This page intentionally left blank

EM1.1TH900622en.fm

10 Terminal strip overview

EM1.1TH900623en.fm

This page intentionally left blank

EM1.1TH900623en.fm

10 Terminal strip overview

RELEASED

This drawing must not without the consent of Tetra Pak be copied, transmitted or disclosed to any third party.

1 2 3 4 5 6 7 8 9 10

Terminal strip of 2543127-0003
+P-X010

From	Cable	Internal Jumper	Terminal	External Jumper	Cable	To	Page.Col.	Option	Function text
			E1						
+C-X004:121	-W124 :1		1			+P-S001:21	013 .5		EMERGENCY STOP
+C-X004:122	-W124 :2		2			+P-S001:22	013 .6		EMERGENCY STOP
+C-X004:123	-W124 :3		3			+P-A071:1	018 .2		
+C-X004:124	-W124 :4		4			+P-A071:59	036 .7		
+C-X004:125	-W124 :5		5			+P-A072:17	036 .2		
+C-X004:126	-W124 :6		6			+P-A072:18	036 .2		
+C-X004:127	-W124 :7		7			+P-A072:19	036 .2		
+C-X004:128	-W124 :8		8			+P-A072:20	036 .2		
+C-X004:129	-W124 :9		9			+P-A071:2	020 .5		
+C-X004:130	-W124 :10		10			+P-A071:3	020 .5		
+C-X004:131	-W124 :11		11			+P-A071:4	020 .5		
+C-X004:132	-W124 :12		12			+P-A071:6	020 .5		
+C-X004:133	-W124 :17		13			+P-A071:8	021 .5		
+C-X004:134	-W124 :14		14			+P-S001:11	013 .5		EMERGENCY STOP
+C-X004:135	-W124 :15		15			+P-S001:12	013 .6		EMERGENCY STOP
+C-X004:137	-W124 :16		16			+P-A071:16	021 .5		
+C-X004:138	-W124 :13		17				021 .5		
			18						
			19						
			20						
			21						
			22						
			23						
			24						
+C-X004:E22	-W124 :GNYE		E2			+P-J010:	021 .5		CHASSIE

Drawing remarks

Tetra Pak	Designer JNT	Date 06/03/03	Machine Tetra Cap Applicator 47		
	ECM No 135544	Denomination TERMINAL STRIP OVERVIEW	Page Type TERMINAL STRIP OVERVIEW		
	Company Tetra Pak Carton Ambient AB	Document No. 2543127-0006	Doc. type ELD	Version AB	Page 001

RELEASED

This drawing must not without the consent of Tetra Pak be copied, transmitted or disclosed to any third party.

1 2 3 4 5 6 7 8 9 10

Terminal strip of 2543127-0003
+M-X101

From	Cable	Internal Jumper	Terminal	External Jumper	Cable	To	Page.Col.	Option	Function text
			E1			+M-J101:	023 .3		CHASSIE
+C-X004:2	-W401 :2		1		-W907 :BN	+M-B903.1:	023 .3		LOWER INFEED
+C-X004:3	-W401 :3		2		-W907 :BU	+M-B903.1:	023 .3		LOWER INFEED
+C-X004:1	-W401 :1		3		-W908 :BK	+M-B903.2:	023 .6		LOWER INFEED
			4		-W908 :BN	+M-B903.2:	023 .3		LOWER INFEED
			5		-W908 :BU	+M-B903.2:	023 .3		LOWER INFEED
			6		-W909 :BN	+M-B904.1:	023 .3		UPPER INFEED
			7		-W909 :BU	+M-B904.1:	023 .3		UPPER INFEED
+C-X004:4	-W401 :4		8		-W910 :BK	+M-B904.2:	023 .6		UPPER INFEED
			9		-W910 :BN	+M-B904.2:	023 .3		UPPER INFEED
			10		-W910 :BU	+M-B904.2:	023 .3		UPPER INFEED
			11		-W104 :BN	+M-B104.1:	023 .3		PACKAGE AT BELT BRAKE DISCHARGE
			12		-W104 :BU	+M-B104.1:	023 .3		PACKAGE AT BELT BRAKE DISCHARGE
+C-X004:5	-W401 :5		13		-W204 :BK	+M-B104.2:	023 .6		PACKAGE AT BELT BRAKE DISCHARGE
			14		-W204 :BN	+M-B104.2:	023 .3		PACKAGE AT BELT BRAKE DISCHARGE
			15		-W204 :BU	+M-B104.2:	023 .3		PACKAGE AT BELT BRAKE DISCHARGE
+C-X004:6	-W401 :6		16		-W924 :1	+M-X924:3	023 .6	X	START CONVEYOR
			17		-W924 :2	+M-X924:1	023 .3	X	START CONVEYOR
			18		-W924 :3	+M-X924:2	023 .3	X	START CONVEYOR
+C-X004:E1	-W401 :GNYE		E2		-W924 :GNYE	+M-X924:E1	023 .3	X	START CONVEYOR

Drawing remarks

Tetra Pak

Designer	Date	Machine
JNT	06/03/03	Tetra Cap Applicator 47

ECM No	Denomination	Page Type
135544	TERMINAL STRIP OVERVIEW	TERMINAL STRIP OVERVIEW

Company	Document No.	Doc. type	Version	Page
Tetra Pak Carton Ambient AB	2543127-0006	ELD	AB	002

RELEASED

This drawing must not without the consent of Tetra Pak be copied, transmitted or disclosed to any third party.

Terminal strip of 2543127-0003
+M-X102

From	Cable	Internal Jumper	Terminal	External Jumper	Cable	To	Page.Col.	Option	Function text
+C-X004:17	-W402 :11		26		-W642 :1	+M-Y142:1	026 .3		HOTMELT DOT
			27		-W642 :2	+M-Y142:2	026 .5		HOTMELT DOT
			28		-W196 :BN	+M-B196.1:	025 .3		CAP CONVEYOR MAX QUEUE
			29		-W196 :BU	+M-B196.1:	025 .3		CAP CONVEYOR MAX QUEUE
+C-X004:18	-W402 :12		30		-W296 :BK	+M-B196.2:	025 .5		CAP CONVEYOR MAX QUEUE
			31		-W296 :BN	+M-B196.2:	025 .3		CAP CONVEYOR MAX QUEUE
			32		-W296 :BU	+M-B196.2:	025 .3		CAP CONVEYOR MAX QUEUE
			33		-W197 :BN	+M-B197.1:	025 .3		CAP CONVEYOR MIN QUEUE
			34		-W197 :BU	+M-B197.1:	025 .3		CAP CONVEYOR MIN QUEUE
+C-X004:19	-W402 :13		35		-W297 :BK	+M-B197.2:	025 .5		CAP CONVEYOR MIN QUEUE
			36		-W297 :BN	+M-B197.2:	025 .3		CAP CONVEYOR MIN QUEUE
			37		-W297 :BU	+M-B197.2:	025 .3		CAP CONVEYOR MIN QUEUE
			38		-W117 :1	+M-B117:31	014 .5		DOOR BELT BRAKE
			39		-W117 :2	+M-B117:32	014 .6		DOOR BELT BRAKE
			40		-W117 :3	+M-B117:21	014 .5		DOOR BELT BRAKE
			41		-W117 :4	+M-B117:22	014 .6		DOOR BELT BRAKE
			E6		-W117 :GNYE	+M-B117:E	014 .6		DOOR BELT BRAKE
			42		-W134 :1	+M-B134:31	014 .6		DOOR LEFT SIDE
			43		-W134 :2	+M-B134:32	014 .8		DOOR LEFT SIDE
			44		-W134 :3	+M-B134:21	014 .6		DOOR LEFT SIDE
			45		-W134 :4	+M-B134:22	014 .8		DOOR LEFT SIDE
			E7		-W134 :GNYE	+M-B134:E	014 .8		DOOR LEFT SIDE
+C-X004:21	-W402 :15		46		-W133 :3	+M-B133:11	014 .8		DOOR LEFT SIDE
			47		-W133 :4	+M-B133:12	014 .9		DOOR LEFT SIDE
			48		-W133 :1	+M-B133:21	014 .8		DOOR LEFT SIDE
+C-X004:20	-W402 :14		49		-W133 :2	+M-B133:22	014 .9		DOOR LEFT SIDE
+C-X004:E3	-W402 :GNYE		E8		-W133 :GNYE	+M-B133:E	014 .9		DOOR LEFT SIDE

Tetra Pak

Designer JNT | Date 06/03/03 | Machine Tetra Cap Applicator 47

ECM No 135544 | Denomination TERMINAL STRIP OVERVIEW | Page Type TERMINAL STRIP OVERVIEW

Company Tetra Pak Carton Ambient AB | Document No. 2543127-0006 | Doc. type ELD | Version AB | Page 004

Drawing remarks

EM1.1TH900623en.fm

RELEASED

This drawing must not without the consent of Tetra Pak be copied, transmitted or disclosed to any third party.

1 2 3 4 5 6 7 8 9 10

Terminal strip of 2543127-0003
+M-X103

From	Cable	Internal Jumper	Terminal	External Jumper	Cable	To	Page.Col.	Option	Function text
			E1			+M-J103:	022 .3		CHASSIE
+C-X004:27	-W503 :1		1		-W120 :RD	+M-B120:RD	022 .3		ANGLE ENCODER
+C-X004:28	-W503 :2		2		-W120 :BU	+M-B120:BU	022 .3		ANGLE ENCODER
+C-X004:29	-W503 :3		3		-W120 :WH	+M-B120:WH	022 .3		ANGLE ENCODER
+C-X004:30	-W503 :4		4		-W120 :BN	+M-B120:BN	022 .3		ANGLE ENCODER
+C-X004:31	-W503 :5		5		-W120 :GN	+M-B120:GN	022 .3		ANGLE ENCODER
+C-X004:32	-W503 :6		6		-W120 :YE	+M-B120:YE	022 .3		ANGLE ENCODER
+C-X004:33	-W503 :7		7		-W120 :GY	+M-B120:GY	022 .3		ANGLE ENCODER
+C-X004:34	-W503 :8		8		-W120 :PK	+M-B120:PK	022 .3		ANGLE ENCODER
+C-X004:35	-W503 :9		9		-W120 :BK	+M-B120:BK	022 .3		ANGLE ENCODER
+C-X004:36	-W503 :10		10		-W120 :GY-PK	+M-B120:GY-PK	022 .3		ANGLE ENCODER
+C-X004:37	-W503 :11		11		-W120 :RD-BU	+M-B120:RD/BU	022 .3		ANGLE ENCODER
			12		-W120 :VT	+M-B120:VT	022 .3		ANGLE ENCODER
+C-X004:E5	-W503 :GNYE		E2				022 .3		
+C-X004:39	-W403 :1		13		-W221 :BK	+M-B121.2:	024 .6		JAMMED OUTFEED
+C-X004:40	-W403 :2		14		-W221 :BN	+M-B121.2:	024 .2		JAMMED OUTFEED
+C-X004:41	-W403 :3		15		-W221 :BU	+M-B121.2:	024 .2		JAMMED OUTFEED
			16		-W180 :BN	+M-B180.1:	024 .2		DETECTION OF MISSING CAP
			17		-W180 :BU	+M-B180.1:	024 .2		DETECTION OF MISSING CAP
+C-X004:42	-W403 :4		18		-W280 :BK	+M-B180.2:	024 .6		DETECTION OF MISSING CAP
			19		-W280 :BN	+M-B180.2:	024 .2		DETECTION OF MISSING CAP
			20		-W280 :BU	+M-B180.2:	024 .2		DETECTION OF MISSING CAP
			21		-W181 :BN	+M-B181.1:	024 .2		DETECTION OF PACKAGE
			22		-W181 :BU	+M-B181.1:	024 .2		DETECTION OF PACKAGE
+C-X004:43	-W403 :5		23		-W281 :BK	+M-B181.2:	024 .6		DETECTION OF PACKAGE
			24		-W281 :BN	+M-B181.2:	024 .2		DETECTION OF PACKAGE
			25		-W281 :BU	+M-B181.2:	024 .2		DETECTION OF PACKAGE
+C-X004:44	-W403 :6		26		-W610 :1	+M-Y920:1	029 .4		EXTERNAL PACKAGE EJECTOR
			27		-W610 :2	+M-Y920:2	029 .6		EXTERNAL PACKAGE EJECTOR
			E3		-W610 :GNYE	+M-Y920:E	029 .6		EXTERNAL PACKAGE EJECTOR

Drawing remarks

Tetra Pak

Designer JNT	Date 06/03/03	Machine Tetra Cap Applicator 47	
ECM No 135544	Denomination TERMINAL STRIP OVERVIEW	Page Type TERMINAL STRIP OVERVIEW	
Company Tetra Pak Carton Ambient AB	Document No. 2543127-0006	Doc. type ELD	Version AB	Page 005

RELEASED

This drawing must not without the consent of Tetra Pak be copied, transmitted or disclosed to any third party.

Terminal strip of 2543127-0003
+M-X103

From	Cable	Internal Jumper	Terminal	External Jumper	Cable	To	Page.Col.	Option	Function text
+C-X004:45	-W403:7		28		-W100:1	+M-B100:1	020.5		AIR PRESSURE SWITCH
			29		-W100:2	+M-B100:3	020.2		AIR PRESSURE SWITCH
			30				020.2		
			E4		-W100:GNYE	+M-B100:E	020.5		AIR PRESSURE SWITCH
			E5				020.5		
+C-X004:46	-W403:8		31		-W142:1	+M-B142:13	024.6		LUBRICATION PRESSURE
			32		-W142:2	+M-B142:14	024.2		LUBRICATION PRESSURE
			33		-W121:BN	+M-B121.1:	024.2		JAMMED OUTFEED
			34		-W121:BU	+M-B121.1:	024.2		JAMMED OUTFEED
+C-X004:47	-W403:9		35		-W143:1	+M-B143:1	024.6		LUBRICATION OIL LEVEL
			36		-W143:2	+M-B143:2	024.2		LUBRICATION OIL LEVEL
			E6		-W143:GNYE	+M-B143:E	024.6		LUBRICATION OIL LEVEL
+C-X004:48	-W403:10		37		-W102:1	+M-S102:21	013.3		EMERGENCY STOP
			38		-W102:2	+M-S102:22	013.4		EMERGENCY STOP
+C-X004:49	-W403:11		39		-W102:3	+M-S102:11	013.3		EMERGENCY STOP
			40		-W102:4	+M-S102:12	013.4		EMERGENCY STOP
			E7		-W102:GNYE	+M-S102:E	013.4		EMERGENCY STOP
+C-X004:50	-W403:12		41		-W129:BK	+M-B129:	023.6		LEAD RAIL IN UPPER POSITION
			42		-W129:BN	+M-B129:	023.3		LEAD RAIL IN UPPER POSITION
			43		-W129:BU	+M-B129:	023.3		LEAD RAIL IN UPPER POSITION
+C-X004:51	-W403:13		44		-W189:BK	+M-B189:	023.6		CAP ON CARRIER BEFORE INDEX
			45		-W189:BN	+M-B189:	023.3		CAP ON CARRIER BEFORE INDEX
			46		-W189:BU	+M-B189:	023.3		CAP ON CARRIER BEFORE INDEX
			47						
			48				032.3		
			49				032.3		
+C-X004:52	-W403:14		50		-W202:BK	+M-B202:	032.5		LEADRAIL IN LOWER POSITION
			51		-W202:BN	+M-B202:	032.3		LEADRAIL IN LOWER POSITION
			52		-W202:BU	+M-B202:	032.3		LEADRAIL IN LOWER POSITION
			53		-W103:1	+M-S103:21	013.5		EMERGENCY STOP

Tetra Pak

Designer JNT | Date 06/03/03 | Machine Tetra Cap Applicator 47
ECM No 135544 | Denomination TERMINAL STRIP OVERVIEW | Page Type TERMINAL STRIP OVERVIEW
Company Tetra Pak Carton Ambient AB | Document No. 2543127-0006 | Doc. type ELD | Version AB | Page 006
Drawing remarks

EM1.1TH900623en.fm

RELEASED

This drawing must not without the consent of Tetra Pak be copied, transmitted or disclosed to any third party.

1 2 3 4 5 6 7 8 9 10

Terminal strip of 2543127-0003
+M-X105

From	Cable	Internal Jumper	Terminal	External Jumper	Cable	To	Page.Col.	Option	Function text
+C-X004:59	-W405 :1		1+		-W608 :1	+M-Y108:	026 .3		DRYING AIR NOZZLE
+C-X004:70	-W405 :12		1-		-W608 :2	+M-Y108:	026 .5		DRYING AIR NOZZLE
+C-X004:E9	-W405 :GNYE		E1		-W608 :GNYE	+M-Y108:	026 .5		DRYING AIR NOZZLE
+C-X004:60	-W405 :2		2+		-W660 :1	+M-Y160:	026 .3		PUSHER CAP TO INDEX
			2-		-W660 :2	+M-Y160:	026 .5		PUSHER CAP TO INDEX
			E2		-W660 :GNYE	+M-Y160:	026 .5		PUSHER CAP TO INDEX
+C-X004:61	-W405 :3		3+		-W661 :1	+M-Y161:	026 .3		CAP BLOW CONVEYOR
			3-		-W661 :2	+M-Y161:	026 .5		CAP BLOW CONVEYOR
			E3		-W661 :GNYE	+M-Y161:	026 .5		CAP BLOW CONVEYOR
+C-X004:62	-W405 :4		4+		-W662 :1	+M-Y162:	026 .3		CAP BLOW INFEEDER
			4-		-W662 :2	+M-Y162:	026 .5		CAP BLOW INFEEDER
			E4		-W662 :GNYE	+M-Y162:	026 .5		CAP BLOW INFEEDER
+C-X004:63	-W405 :5		5+		-W600 :1	+M-Y100:	026 .3		MAIN AIR VALVE
			5-		-W600 :2	+M-Y100:	026 .5		MAIN AIR VALVE
			E5		-W600 :GNYE	+M-Y100:	026 .5		MAIN AIR VALVE
+C-X004:64	-W405 :6		6+		-W614 :1	+M-Y114:	029 .4		LUBRICATION
+C-X004:71	-W405 :13		6-		-W614 :2	+M-Y114:	029 .6		LUBRICATION
			E6		-W614 :GNYE	+M-Y114:	029 .6		LUBRICATION
			7+				029 .5		
			7-				029 .6		
			E7				029 .6		
			8+				029 .5		
			8-				029 .6		
			E8				029 .6		
			9+				029 .5		
			9-				029 .6		
			E9				029 .6		
			10+				029 .5		
			10-				029 .6		
			E10				029 .6		

Drawing remarks

Tetra Pak

Designer	Date	Machine
JNT	06/03/03	Tetra Cap Applicator 47

ECM No	Denomination	Page Type
135544	TERMINAL STRIP OVERVIEW	TERMINAL STRIP OVERVIEW

Company	Document No.	Doc. type	Version	Page
Tetra Pak Carton Ambient AB	2543127-0006	ELD	AB	008

10 Terminal strip overview

RELEASED

This drawing must not without the consent of Tetra Pak be copied, transmitted or disclosed to any third party.

1 2 3 4 5 6 7 8 9 10

Terminal strip of 2543127-0003
+M-X109

From	Cable	Internal Jumper	Terminal	External Jumper	Cable	To	Page.Col.	Option	Function text
+M-J109.1:			E1			+M-J109:	014 .3		CHASSIE
+C-X004:103	-W409 :1		1		-W137 :1	+M-B137:21	014 .3		DOOR INFEEDER
			2		-W137 :2	+M-B137:22	014 .4		DOOR INFEEDER
+C-X004:104	-W409 :2		3		-W137 :3	+M-B137:11	014 .3		DOOR INFEEDER
			4		-W137 :4	+M-B137:12	014 .4		DOOR INFEEDER
			E2		-W137 :GNYE	+M-B137:E	014 .4		DOOR INFEEDER
			5						
			6						
+C-X004:105	-W409 :3		7			+M-S115H:13	021 .3		INFEEDER RESTART
+C-X004:106	-W409 :4		8			+M-S115H:14	021 .5		INFEEDER RESTART
+C-X004:107	-W409 :7		9			+M-H115S:X1	031 .3		INFEEDER RESTART
+C-X004:108	-W409 :8		10			+M-H115S:X2	031 .6		INFEEDER RESTART
			11		-W198 :BN	+M-B198.1:	024 .2		LOW LEVEL PADDLE ELEVATOR
			12		-W198 :BU	+M-B198.1:	024 .2		LOW LEVEL PADDLE ELEVATOR
+C-X004:109	-W409 :9		13		-W298 :BK	+M-B198.2:	024 .6		LOW PADDLE ELEVATOR
			14		-W298 :BN	+M-B198.2:	024 .2		LOW PADDLE ELEVATOR
			15		-W298 :BU	+M-B198.2:	024 .2		LOW PADDLE ELEVATOR
+C-X004:110	-W409 :10		16		-W199 :BK	+M-B199:	024 .6		LOW LEVEL INFEEDER
			17		-W199 :BN	+M-B199:	024 .2		LOW LEVEL INFEEDER
			18		-W199 :BU	+M-B199:	024 .2		LOW LEVEL INFEEDER
			19						
			20						
			21						
+C-X004:111	-W409 :11		22		-W914 :4	+M-X914:6	033 .6		OUTFEED LEFT LINE
+C-X004:112	-W409 :20		23		-W914 :3	+M-X914:3	024 .6		OUTFEED LEFT LINE
			24		-W914 :1	+M-X914:1	024 .2		OUTFEED LEFT LINE
			25		-W914 :2	+M-X914:2	024 .2		OUTFEED LEFT LINE
			E3		-W914 :GNYE	+M-X914:E1	024 .2		OUTFEED LEFT LINE
			26			+M-S116H:13	032 .3		EMTYING INFEEDER
+C-X004:113	-W409 :13		27			+M-S116H:14	032 .5		EMTYING INFEEDER

Drawing remarks

Tetra Pak	Designer JNT	Date 06/03/03	Machine Tetra Cap Applicator 47		
	ECM No 135544	Denomination TERMINAL STRIP OVERVIEW	Page Type TERMINAL STRIP OVERVIEW		
	Company Tetra Pak Carton Ambient AB	Document No. 2543127-0006	Doc. type ELD	Version AB	Page 009

RELEASED

This drawing must not without the consent of Tetra Pak be copied, transmitted or disclosed to any third party.

Terminal strip of 2543127-0003

+M-X109

From	Cable	Internal Jumper	Terminal	External Jumper	Cable	To	Page.Col.	Option	Function text
+C-X004:114	-W409:14		28			+M-H116S:X1	030 .4		EMPTYING INFEEDER
			29			+M-H116S:X2	030 .6		EMPTYING INFEEDER
+C-X004:115	-W409:15		30		-W200:BK	+M-B200:	032 .5		CAP CHUTE CLOSED
			31		-W200:BN	+M-B200:	032 .3		CAP CHUTE CLOSED
			32		-W200:BU	+M-B200:	032 .3		CAP CHUTE CLOSED
+C-X004:116	-W409:16		33		-W201:BK	+M-B201:	032 .5		ROTATION GUARD INFEEDER
			34		-W201:BN	+M-B201:	032 .3		ROTATION GUARD INFEEDER
			35		-W201:BU	+M-B201:	032 .3		ROTATION GUARD INFEEDER
			36		-W138:1	+M-B138:21	014 .4		DOOR INFEEDER
			37		-W138:2	+M-B138:22	014 .6		DOOR INFEEDER
			38		-W138:3	+M-B138:11	014 .4		DOOR INFEEDER
			39		-W138:4	+M-B138:12	014 .6		DOOR INFEEDER
			E4		-W138:GNYE	+M-B138:E	014 .6		DOOR INFEEDER
			40		-W139:1	+M-B139:21	014 .6		DOOR INFEEDER
+C-X004:117	-W409:17		41		-W139:2	+M-B139:22	014 .8		DOOR INFEEDER
			42		-W139:3	+M-B139:11	014 .6		DOOR INFEEDER
+C-X004:118	-W409:18		43		-W139:4	+M-B139:12	014 .8		DOOR INFEEDER
			E5		-W139:GNYE	+M-B139:E	014 .8		DOOR INFEEDER
+C-X004:119	-W409:12		44			+M-S104:21	013 .3		EMERGENCY STOP
+C-X004:120	-W409:5		45			+M-S104:22	013 .3		EMERGENCY STOP
+C-X004:93	-W409:19		46			+M-S104:11	013 .3		EMERGENCY STOP
+C-X004:94	-W409:6		47			+M-S104:12	013 .3		EMERGENCY STOP
+C-X004:E19	-W409:GNYE		E6				032 .3		

Tetra Pak

Designer JNT | Date 06/03/03 | Machine Tetra Cap Applicator 47

ECM No 135544 | Denomination TERMINAL STRIP OVERVIEW | Page Type TERMINAL STRIP OVERVIEW

Company Tetra Pak Carton Ambient AB | Document No. 2543127-0006 | Doc. type ELD | Version AB | Page 010

Drawing remarks

EM1.1TH900623en.fm

RELEASED

This drawing must not without the consent of Tetra Pak be copied, transmitted or disclosed to any third party.

1 2 3 4 5 6 7 8 9 10

Terminal strip of 2543127-0003
+M-X901

From	Cable	Internal Jumper	Terminal	External Jumper	Cable	To	Page.Col.	Option	Function text
			E1			+M-J901:	021 .3		CHASSIE
			1A		-W902 :BN	+M-B901.1:	021 .3		EXT. HOSE BRAKE SENSOR 1
+C-X004:97	-W901 :1		1		-W903 :BK	+M-B901.2:	021 .5		EXT. HOSE BRAKE SENSOR 1
			1B		-W902 :BU	+M-B901.1:	021 .3		EXT. HOSE BRAKE SENSOR 1
			2A		-W903 :BN	+M-B901.2:	021 .3		EXT. HOSE BRAKE SENSOR 1
			2				021 .5		
			2B		-W903 :BU	+M-B901.2:	021 .3		EXT. HOSE BRAKE SENSOR 1
			3A		-W904 :BN	+M-B902.1:	021 .3		EXT. HOSE BRAKE SENSOR 2
+C-X004:100	-W901 :4		3		-W905 :BK	+M-B902.2:	021 .5		EXT. HOSE BRAKE SENSOR 2
			3B		-W904 :BU	+M-B902.1:	021 .3		EXT. HOSE BRAKE SENSOR 2
			4A		-W905 :BN	+M-B902.2:	021 .3		EXT. HOSE BRAKE SENSOR 2
			4				021 .5		
			4B		-W905 :BU	+M-B902.2:	021 .3		EXT. HOSE BRAKE SENSOR 2
+C-X004:98	-W901 :2		5A				021 .3		
+C-X004:101	-W901 :5		5		-W906 :1	+M-Y901:1	030 .4		EXT. HOSE BRAKE
+C-X004:99	-W901 :3		5B		-W906 :2	+M-Y901:2	030 .6		EXT. HOSE BRAKE
+C-X004:E17	-W901 :GNYE		E2		-W906 :GNYE	+M-Y901:E	030 .6		EXT. HOSE BRAKE

Drawing remarks

Tetra Pak	Designer JNT	Date 06/03/03	Machine Tetra Cap Applicator 47
	ECM No 135544	Denomination TERMINAL STRIP OVERVIEW	Page Type TERMINAL STRIP OVERVIEW
	Company Tetra Pak Carton Ambient AB	Document No. 2543127-0006	Doc. type ELD / Version AB / Page 011

RELEASED

This drawing must not without the consent of Tetra Pak be copied, transmitted or disclosed to any third party.

Terminal strip of 2543127-0003

+M-X914

From	Cable	Internal Jumper	Terminal	External Jumper	Cable	To	Page.Col.	Option	Function text
+M-X109:E3	-W914:GNYE		E1			+M-J914:	024 .3		CHASSIE
+M-X109:24	-W914:1		1		-W922:BN	+M-B905.1:	024 .3		QUEUE OUTFEED LEFT LINE
+M-X109:25	-W914:2		2		-W922:BU	+M-B905.1:	024 .3		QUEUE OUTFEED LEFT LINE
+M-X109:23	-W914:3		3		-W921:BK	+M-B905.2:	024 .5		QUEUE OUTFEED LEFT LINE
			4		-W921:BN	+M-B905.2:	024 .3		QUEUE OUTFEED LEFT LINE
			5		-W921:BU	+M-B905.2:	024 .3		QUEUE OUTFEED LEFT LINE
+M-X109:22	-W914:4		6		-W920:BK	+M-B906:	033 .5		LOW SPEED LEFT LINE
			7		-W920:BN	+M-B906:	033 .3		LOW SPEED LEFT LINE
			8		-W920:BU	+M-B906:	033 .3		LOW SPEED LEFT LINE
			9				033 .3		
			10				033 .3		
			11						
			E2						

Drawing remarks

Tetra Pak

Designer JNT | Date 06/03/03 | Machine Tetra Cap Applicator 47

ECM No 135544 | Denomination TERMINAL STRIP OVERVIEW | Page Type TERMINAL STRIP OVERVIEW

Company Tetra Pak Carton Ambient AB | Document No. 2543127-0006 | Doc. type ELD | Version AB | Page 012

EM1.1TH900623en.fm

10 Terminal strip overview

RELEASED

This drawing must not without the consent of Tetra Pak be copied, transmitted or disclosed to any third party.

1 2 3 4 5 6 7 8 9 10

Terminal strip of 2543127-0003
+M-X915

From	Cable	Internal Jumper	Terminal	External Jumper	Cable	To	Page.Col.	Option	Function text
+C-X004:E13	-W915 :GNYE		E1			+M-J915:	033 .5	X	CHASSIE
+C-X004:80	-W915 :1		1		-W927 :BN	+M-B917.1:	033 .3	X	QUEUE OUTFEED RIGHT LINE
+C-X004:81	-W915 :2		2		-W927 :BU	+M-B917.1:	033 .3	X	QUEUE OUTFEED RIGHT LINE
+C-X004:82	-W915 :3		3		-W917 :BK	+M-B917.2:	033 .5	X	QUEUE OUTFEED RIGHT LINE
			4		-W917 :BN	+M-B917.2:	033 .3	X	QUEUE OUTFEED RIGHT LINE
			5		-W917 :BU	+M-B917.2:	033 .3	X	QUEUE OUTFEED RIGHT LINE
+C-X004:83	-W915 :4		6		-W918 :BK	+M-B918:	033 .5	X	LOW SPEED RIGHT LINE
			7		-W918 :BN	+M-B918:	033 .3	X	LOW SPEED RIGHT LINE
			8		-W918 :BU	+M-B918:	033 .3	X	LOW SPEED RIGHT LINE
+C-X004:84	-W915 :5		9		-W916 :BK	+M-B916:	033 .5	X	SWITCH IN RIGHT POS.
			10		-W916 :BN	+M-B916:	033 .3	X	SWITCH IN RIGHT POS.
			11		-W916 :BU	+M-B916:	033 .3	X	SWITCH IN RIGHT POS.
			E2						

Drawing remarks

Tetra Pak	Designer JNT	Date 06/03/03	Machine Tetra Cap Applicator 47		
	ECM No 135544	Denomination TERMINAL STRIP OVERVIEW	Page Type TERMINAL STRIP OVERVIEW		
	Company Tetra Pak Carton Ambient AB	Document No. 2543127-0006	Doc. type ELD	Version AB	Page 013

RELEASED

This drawing must not without the consent of Tetra Pak be copied, transmitted or disclosed to any third party.

Terminal strip of 2543127-0003

+M-X924

From	Cable	Internal Jumper	Terminal	External Jumper	Cable	To	Page.Col.	Option	Function text
+M-X101:E2	-W924 :GNYE		E1			+M-J924:	023 .4	X	CHASSIE
+M-X101:17	-W924 :2		1				023 .4	X	
+M-X101:18	-W924 :3		2				023 .4	X	
+M-X101:16	-W924 :1		3		-W925 :BK	+M-B925:	023 .5	X	START CONVEYOR
			4		-W925 :BN	+M-B925:	023 .4	X	START CONVEYOR
			5		-W925 :BU	+M-B925:	023 .4	X	START CONVEYOR
			6				023 .5	X	
			7				023 .4	X	
			8				023 .4	X	
			9				023 .5	X	
			10				023 .4	X	
			11				023 .4	X	
			E2						

Tetra Pak

Designer JNT | Date 06/03/03 | Machine Tetra Cap Applicator 47

ECM No 135544 | Denomination TERMINAL STRIP OVERVIEW | Page Type TERMINAL STRIP OVERVIEW

Company Tetra Pak Carton Ambient AB | Document No. 2543127-0006 | Doc. type ELD | Version AB | Page 014

Drawing remarks

EM1.1TH900623en.fm

11 Cable connection list

EM1.1TH900624en.fm

This page intentionally left blank

EM1.1TH900624en.fm

11 Cable connection list

RELEASED

This drawing must not without the consent of Tetra Pak be copied, transmitted or disclosed to any third party.

1 2 3 4 5 6 7 8 9 10

Cable Connection List of 2543127-0003

Cable	Core	From	To	Page.Col.	Option
+C-W001	1	+C-G001:	+C-A060:	003 .6	
+C-W096	1	+C-X090:5	+C-X090:6	016 .2	BRIDGE
+C-W097	1	+C-X090:1	+C-X090:2	016 .2	BRIDGE
+C-W098	1	+C-X004:141	+C-X004:142	013 .2	
+C-W099	1	+C-X004:143	+C-X004:144	013 .2	
+C-W100	1	+M-X103:28	+M-B100:1	020 .5	
+C-W100	2	+M-X103:29	+M-B100:3	020 .3	
+C-W100	GNYE	+M-X103:E4	+M-B100:E	020 .5	
+C-W101	1	+C-Q000:1		.2	
+C-W101	2	+C-Q000:3		.2	
+C-W101	3	+C-Q000:5		.2	
+C-W101	4	+C-Q000:N		.2	
+C-W101	GNYE	+C-Q000:		.2	
+C-W102	1	+M-X103:37	+M-S102:21	013 .3	
+C-W102	2	+M-X103:38	+M-S102:22	013 .4	
+C-W102	3	+M-X103:39	+M-S102:11	013 .3	
+C-W102	4	+M-X103:40	+M-S102:12	013 .4	
+C-W102	GNYE	+M-X103:E7	+M-S102:E	013 .4	
+C-W103	1	+M-X103:53	+M-S103:21	013 .5	
+C-W103	2	+M-X103:54	+M-S103:22	013 .6	
+C-W103	3	+M-X103:55	+M-S103:11	013 .5	
+C-W103	4	+M-X103:56	+M-S103:12	013 .6	
+C-W103	GNYE	+M-X103:E8	+M-S103:E	013 .6	
+C-W104	BN	+M-X101:11	+M-B104.1:	023 .4	
+C-W104	BU	+M-X101:12	+M-B104.1:	023 .4	
+C-W110	1	+C-X004:85	+M-H101:1	031 .4	
+C-W110	2	+C-X004:86	+M-H101:2	031 .4	

Cable	Core	From	To	Page.Col.	Option
+C-W110	3	+C-X004:87	+M-H101:3	031 .4	
+C-W110	4	+C-X004:88	+M-H101:0	031 .7	
+C-W110	GNYE	+C-X004:E14		031	
+C-W111	1	+C-X002:28	+M-E100:1	005 .2	
+C-W111	2	+C-X002:29	+M-E100:2	005 .3	
+C-W111	GNYE	+C-X002:E10	+M-E100:E	005 .3	
+C-W117	1	+M-X102:38	+M-B117:31	014 .6	
+C-W117	2	+M-X102:39	+M-B117:32	014 .6	
+C-W117	3	+M-X102:40	+M-B117:21	014 .6	
+C-W117	4	+M-X102:41	+M-B117:22	014 .6	
+C-W117	GNYE	+M-X102:E6	+M-B117:E	014 .6	
+C-W120	GY-PK	+M-X103:10	+M-B120:GY-PK	022 .3	
+C-W120	BK	+M-X103:9	+M-B120:BK	022 .3	
+C-W120	PK	+M-X103:8	+M-B120:PK	022 .3	
+C-W120	GY	+M-X103:7	+M-B120:GY	022 .3	
+C-W120	YE	+M-X103:6	+M-B120:YE	022 .3	
+C-W120	GN	+M-X103:5	+M-B120:GN	022 .3	
+C-W120	BN	+M-X103:4	+M-B120:BN	022 .3	
+C-W120	WH	+M-X103:3	+M-B120:WH	022 .3	
+C-W120	BU	+M-X103:2	+M-B120:BU	022 .3	
+C-W120	RD	+M-X103:1	+M-B120:RD	022 .3	
+C-W120	VT	+M-X103:12	+M-B120:VT	022 .3	
+C-W120	RD-BU	+M-X103:11	+M-B120:RD/BU	022 .3	
+C-W121	BN	+M-X103:33	+M-B121.1:	024 .3	
+C-W121	BU	+M-X103:34	+M-B121.1:	024 .3	
+C-W122	BK	+C-X002:25	+M-R102:F1	005 .7	
+C-W122	L.BU	+C-X002:27	+M-R102:0	005 .9	

Drawing remarks

Tetra Pak	Designer JNT	Date 06/03/03	Machine Tetra Cap Applicator 47		
	ECM No 135544	Denomination CABLE CONNECTION LIST	Page Type CABLE CONNECTION LIST		
	Company Tetra Pak Carton Ambient AB	Document No. 2543127-0007	Doc. type ELD	Version AB	Page 001

RELEASED

This drawing must not without the consent of Tetra Pak be copied, transmitted or disclosed to any third party.

1 2 3 4 5 6 7 8 9 10

Cable Connection List of 2543127-0003

Cable	Core	From	To	Page.Col.	Option
+C-W122	BN	+C-X002:26	+M-R102:F2	005 .8	
+C-W122	GNYE	+C-X002:E9	+M-R102:E	005 .9	
+C-W124	1	+C-X004:121	+P-X010:1	013 .5	
+C-W124	2	+C-X004:122	+P-X010:2	013 .7	
+C-W124	3	+C-X004:123	+P-X010:3	018 .2	
+C-W124	4	+C-X004:124	+P-X010:4	036 .8	
+C-W124	5	+C-X004:125	+P-X010:5	036 .2	
+C-W124	6	+C-X004:126	+P-X010:6	036 .2	
+C-W124	7	+C-X004:127	+P-X010:7	036 .2	
+C-W124	8	+C-X004:128	+P-X010:8	036 .2	
+C-W124	9	+C-X004:129	+P-X010:9	020 .6	
+C-W124	10	+C-X004:130	+P-X010:10	020 .6	
+C-W124	11	+C-X004:131	+P-X010:11	020 .6	
+C-W124	12	+C-X004:132	+P-X010:12	020 .6	
+C-W124	13	+C-X004:138	+P-X010:17	021 .6	
+C-W124	14	+C-X004:134	+P-X010:14	013 .5	
+C-W124	15	+C-X004:135	+P-X010:15	013 .7	
+C-W124	16	+C-X004:137	+P-X010:16	021 .6	
+C-W124	17	+C-X004:133	+P-X010:13	021 .6	
+C-W124	GNYE	+C-X004:E22	+P-X010:E2	021 .6	
+C-W129	BU	+M-X103:43	+M-B129:	023 .5	
+C-W129	BN	+M-X103:42	+M-B129:	023 .5	
+C-W129	BK	+M-X103:41	+M-B129:	023 .6	
+C-W131	1	+C-X002:22	+M-R101:L1	005 .4	
+C-W131	2	+C-X002:23	+M-R101:L2	005 .5	
+C-W131	3	+C-X002:24	+M-R101:N	005 .5	
+C-W131	GNYE	+C-X002:E8	+M-R101:	005 .5	

Cable	Core	From	To	Page.Col.	Option
+C-W133	1	+M-X102:48	+M-B133:21	014 .9	
+C-W133	2	+M-X102:49	+M-B133:22	014 .9	
+C-W133	3	+M-X102:46	+M-B133:11	014 .9	
+C-W133	4	+M-X102:47	+M-B133:12	014 .9	
+C-W133	GNYE	+M-X102:E8	+M-B133:E	014 .9	
+C-W134	1	+M-X102:42	+M-B134:31	014 .7	
+C-W134	2	+M-X102:43	+M-B134:32	014 .8	
+C-W134	3	+M-X102:44	+M-B134:21	014 .7	
+C-W134	4	+M-X102:45	+M-B134:22	014 .8	
+C-W134	GNYE	+M-X102:E7	+M-B134:E	014 .8	
+C-W135	1	+M-X102:22	+M-B135:31	014 .4	
+C-W135	2	+M-X102:23	+M-B135:32	014 .4	
+C-W135	3	+M-X102:24	+M-B135:21	014 .4	
+C-W135	4	+M-X102:25	+M-B135:22	014 .4	
+C-W135	GNYE	+M-X102:E4	+M-B135:E	014 .4	
+C-W136	1	+M-X102:1	+M-B136:21	014 .2	
+C-W136	2	+M-X102:2	+M-B136:22	014 .3	
+C-W136	3	+M-X102:3	+M-B136:11	014 .2	
+C-W136	4	+M-X102:4	+M-B136:12	014 .3	
+C-W136	GNYE	+M-X102:E2	+M-B136:E	014 .3	
+C-W137	1	+M-X109:1	+M-B137:21	014 .3	
+C-W137	2	+M-X109:2	+M-B137:22	014 .4	
+C-W137	3	+M-X109:3	+M-B137:11	014 .3	
+C-W137	4	+M-X109:4	+M-B137:12	014 .4	
+C-W137	GNYE	+M-X109:E2	+M-B137:E	014 .4	
+C-W138	1	+M-X109:36	+M-B138:21	014 .5	
+C-W138	2	+M-X109:37	+M-B138:22	014 .6	

Drawing remarks

Tetra Pak

Designer	Date	Machine
JNT	06/03/03	Tetra Cap Applicator 47

ECM No	Denomination	Page Type
135544	CABLE CONNECTION LIST	CABLE CONNECTION LIST

Company	Document No.	Doc. type	Version	Page
Tetra Pak Carton Ambient AB	2543127-0007	ELD	AB	002

RELEASED

This drawing must not without the consent of Tetra Pak be copied, transmitted or disclosed to any third party.

1 2 3 4 5 6 7 8 9 10

Cable Connection List of 2543127-0003

Cable	Core	From	To	Page.Col.	Option
+C-W138	3	+M-X109:38	+M-B138:11	014 .5	
+C-W138	4	+M-X109:39	+M-B138:12	014 .6	
+C-W138	GNYE	+M-X109:E4	+M-B138:E	014 .6	
+C-W139	1	+M-X109:40	+M-B139:21	014 .7	
+C-W139	2	+M-X109:41	+M-B139:22	014 .8	
+C-W139	3	+M-X109:42	+M-B139:11	014 .7	
+C-W139	4	+M-X109:43	+M-B139:12	014 .8	
+C-W139	GNYE	+M-X109:E5	+M-B139:E	014 .8	
+C-W142	1	+M-X103:31	+M-B142:13	024 .6	
+C-W142	2	+M-X103:32	+M-B142:14	024 .4	
+C-W143	1	+M-X103:35	+M-B143:1	024 .6	
+C-W143	2	+M-X103:36	+M-B143:2	024 .3	
+C-W143	GNYE	+M-X103:E6	+M-B143:E	024 .6	
+C-W180	BN	+M-X103:16	+M-B180.1:	024 .3	
+C-W180	BU	+M-X103:17	+M-B180.1:	024 .3	
+C-W181	BN	+M-X103:21	+M-B181.1:	024 .3	
+C-W181	BU	+M-X103:22	+M-B181.1:	024 .3	
+C-W189	BU	+M-X103:46	+M-B189:	023 .5	
+C-W189	BN	+M-X103:45	+M-B189:	023 .5	
+C-W189	BK	+M-X103:44	+M-B189:	023 .6	
+C-W191	BN	+M-X103:58	+M-B191:	025 .4	
+C-W191	BU	+M-X103:59	+M-B191:	025 .4	
+C-W191	BK	+M-X103:57	+M-B191:	025 .5	
+C-W192	BN	+M-X103:61	+M-B192:	025 .4	
+C-W192	BU	+M-X103:62	+M-B192:	025 .4	
+C-W192	BK	+M-X103:60	+M-B192:	025 .5	
+C-W193	BN	+M-X102:20	+M-B193:	025 .3	

Cable	Core	From	To	Page.Col.	Option
+C-W193	BU	+M-X102:21	+M-B193:	025 .3	
+C-W193	BK	+M-X102:19	+M-B193:	025 .5	
+C-W196	BN	+M-X102:28	+M-B196.1:	025 .3	
+C-W196	BU	+M-X102:29	+M-B196.1:	025 .3	
+C-W197	BN	+M-X102:33	+M-B197.1:	025 .3	
+C-W197	BU	+M-X102:34	+M-B197.1:	025 .3	
+C-W198	BU	+M-X109:12	+M-B198.1:	024 .3	
+C-W198	BN	+M-X109:11	+M-B198.1:	024 .3	
+C-W199	BN	+M-X109:17	+M-B199:	024 .4	
+C-W199	BU	+M-X109:18	+M-B199:	024 .4	
+C-W199	BK	+M-X109:16	+M-B199:	024 .6	
+C-W200	BN	+M-X109:31	+M-B200:	032 .4	
+C-W200	BU	+M-X109:32	+M-B200:	032 .4	
+C-W200	BK	+M-X109:30	+M-B200:	032 .5	
+C-W201	BU	+M-X109:35	+M-B201:	032 .4	
+C-W201	BN	+M-X109:34	+M-B201:	032 .4	
+C-W201	BK	+M-X109:33	+M-B201:	032 .5	
+C-W202	BN	+M-X103:51	+M-B202:	032 .4	
+C-W202	BU	+M-X103:52	+M-B202:	032 .4	
+C-W202	BK	+M-X103:50	+M-B202:	032 .5	
+C-W204	BN	+M-X101:14	+M-B104.2:	023 .5	
+C-W204	BU	+M-X101:15	+M-B104.2:	023 .5	
+C-W204	BK	+M-X101:13	+M-B104.2:	023 .6	
+C-W217	1	+M-X102:9	+M-B117.1:A1	030 .5	
+C-W217	2	+M-X102:10	+M-B117.1:A2	030 .6	
+C-W221	BN	+M-X103:14	+M-B121.2:	024 .5	
+C-W221	BU	+M-X103:15	+M-B121.2:	024 .5	

Drawing remarks	Tetra Pak	Designer JNT	Date 06/03/03	Machine Tetra Cap Applicator 47	
		ECM No 135544	Denomination CABLE CONNECTION LIST	Page Type CABLE CONNECTION LIST	
		Company Tetra Pak Carton Ambient AB	Document No. 2543127-0007	Doc. type ELD / Version AB	Page 003

RELEASED

This drawing must not without the consent of Tetra Pak be copied, transmitted or disclosed to any third party.

1 2 3 4 5 6 7 8 9 10

Cable Connection List of 2543127-0003

Cable	Core	From	To	Page.Col.	Option
+C-W221	BK	+M-X103:13	+M-B121.2:	024 .6	
+C-W231	1	+C-X004:77	+M-R101:3	025 .4	
+C-W231	2	+C-X004:78	+M-R101:6	025 .4	
+C-W234	1	+M-X102:5	+M-B134.1:A1	030 .4	
+C-W234	2	+M-X102:6	+M-B134.1:A2	030 .6	
+C-W235	1	+M-X102:7	+M-B135.1:A1	030 .4	
+C-W235	2	+M-X102:8	+M-B135.1:A2	030 .6	
+C-W280	BN	+M-X103:19	+M-B180.2:	024 .5	
+C-W280	BU	+M-X103:20	+M-B180.2:	024 .5	
+C-W280	BK	+M-X103:18	+M-B180.2:	024 .6	
+C-W281	BN	+M-X103:24	+M-B181.2:	024 .5	
+C-W281	BU	+M-X103:25	+M-B181.2:	024 .5	
+C-W281	BK	+M-X103:23	+M-B181.2:	024 .6	
+C-W296	BN	+M-X102:31	+M-B196.2:	025 .5	
+C-W296	BU	+M-X102:32	+M-B196.2:	025 .5	
+C-W296	BK	+M-X102:30	+M-B196.2:	025 .5	
+C-W297	BN	+M-X102:36	+M-B197.2:	025 .5	
+C-W297	BU	+M-X102:37	+M-B197.2:	025 .5	
+C-W297	BK	+M-X102:35	+M-B197.2:	025 .5	
+C-W298	BN	+M-X109:14	+M-B198.2:	024 .5	
+C-W298	BU	+M-X109:15	+M-B198.2:	024 .5	
+C-W298	BK	+M-X109:13	+M-B198.2:	024 .6	
+C-W301	1	+C-X002:1	+M-M901:U	008 .3	
+C-W301	2	+C-X002:2	+M-M901:V	008 .3	
+C-W301	3	+C-X002:3	+M-M901:W	008 .3	
+C-W301	GNYE	+C-X002:E2	+M-M901:⏚	008 .4	
+C-W302	1	+M-M102:U	+C-G002:U	007 .2	DELTA

Cable	Core	From	To	Page.Col.	Option
+C-W302	2	+M-M102:V	+C-G002:W	007 .2	DELTA
+C-W302	3	+M-M102:W	+C-G002:V	007 .2	DELTA
+C-W302	GNYE	+M-M102:⏚	+C-J022:	007 .5	DELTA
+C-W302	SH	+C-J029:	+C-J028:	007 .4	DELTA
+C-W305	1	+M-M105:U	+C-G005:U	007 .7	DELTA
+C-W305	2	+M-M105:V	+C-G005:W	007 .7	DELTA
+C-W305	3	+M-M105:W	+C-G005:V	007 .7	DELTA
+C-W305	GNYE	+M-M105:⏚	+C-J021:	007 .9	DELTA
+C-W305	SH	+C-J031:	+C-J030:	007 .9	DELTA
+C-W310	1	+C-X002:10	+M-M110:U	004 .3	
+C-W310	2	+C-X002:11	+M-M110:V	004 .3	
+C-W310	3	+C-X002:12	+M-M110:W	004 .3	
+C-W310	GNYE	+C-X002:E4	+M-M110:⏚	004 .3	
+C-W320	1	+C-X002:13	+M-M120:U	009 .9	
+C-W320	2	+C-X002:15	+M-M120:V	009 .9	
+C-W320	3	+C-X002:14	+M-M120:W	009 .9	
+C-W320	GNYE	+C-X002:E5	+M-M120:⏚	009 .9	
+C-W321	1	+M-M121:V	+C-G010:U	009 .4	DELTA
+C-W321	2	+M-M121:W	+C-G010:W	009 .4	DELTA
+C-W321	3	+M-M121:U	+C-G010:V	009 .4	DELTA
+C-W321	GNYE	+M-M121:⏚	+C-J019:	009 .6	DELTA
+C-W321	SH	+C-J032:	+C-J033:	009 .6	DELTA
+C-W322	1	+C-X002:19	+M-M122:U	008 .7	
+C-W322	2	+C-X002:21	+M-M122:V	008 .8	
+C-W322	3	+C-X002:20	+M-M122:W	008 .8	
+C-W322	GNYE	+C-X002:E7	+M-M122:⏚	008 .8	
+C-W401	1	+C-X004:1	+M-X101:3	023 .7	

Drawing remarks

Tetra Pak

Designer	Date	Machine
JNT	06/03/03	Tetra Cap Applicator 47

ECM No	Denomination	Page Type
135544	CABLE CONNECTION LIST	CABLE CONNECTION LIST

Company	Document No.	Doc. type	Version	Page
Tetra Pak Carton Ambient AB	2543127-0007	ELD	AB	004

RELEASED

This drawing must not without the consent of Tetra Pak be copied, transmitted or disclosed to any third party.

1 2 3 4 5 6 7 8 9 10

Cable Connection List of 2543127-0003

Cable	Core	From	To	Page.Col.	Option
+C-W401	2	+C-X004:2	+M-X101:1	023 .3	
+C-W401	3	+C-X004:3	+M-X101:2	023 .3	
+C-W401	4	+C-X004:4	+M-X101:8	023 .7	
+C-W401	5	+C-X004:5	+M-X101:13	023 .7	
+C-W401	6	+C-X004:6	+M-X101:16	023 .7	
+C-W401	GNYE	+C-X004:E1	+M-X101:E2	023 .3	
+C-W402	1	+C-X004:7	+M-X102:1	014 .2	
+C-W402	2	+C-X004:8	+M-X102:3	014 .2	
+C-W402	3	+C-X004:9	+M-X102:5	030 .4	
+C-W402	4	+C-X004:10	+M-X102:7	030 .4	
+C-W402	5	+C-X004:11	+M-X102:8	030 .7	
+C-W402	6	+C-X004:12	+M-X102:11	026 .3	
+C-W402	7	+C-X004:14	+M-X102:20	025 .3	
+C-W402	8	+C-X004:16	+M-X102:19	025 .7	
	9				
	10				
+C-W402	11	+C-X004:17	+M-X102:26	026 .3	
+C-W402	12	+C-X004:18	+M-X102:30	025 .7	
+C-W402	13	+C-X004:19	+M-X102:35	025 .7	
+C-W402	14	+C-X004:20	+M-X102:49	014 .10	
+C-W402	15	+C-X004:21	+M-X102:47	014 .10	
+C-W402	16		+C-X004:22	.7	
+C-W402	17		+C-X004:23	.7	
+C-W402	GNYE	+C-X004:E3	+M-X102:E8	014 .10	
+C-W403	1	+C-X004:39	+M-X103:13	024 .7	
+C-W403	2	+C-X004:40	+M-X103:14	024 .2	
+C-W403	3	+C-X004:41	+M-X103:15	024 .2	

Cable	Core	From	To	Page.Col.	Option
+C-W403	4	+C-X004:42	+M-X103:18	024 .7	
+C-W403	5	+C-X004:43	+M-X103:23	024 .7	
+C-W403	6	+C-X004:44	+M-X103:26	029 .4	
+C-W403	7	+C-X004:45	+M-X103:28	020 .6	
+C-W403	8	+C-X004:46	+M-X103:31	024 .7	
+C-W403	9	+C-X004:47	+M-X103:35	024 .7	
+C-W403	10	+C-X004:48	+M-X103:37	013 .3	
+C-W403	11	+C-X004:49	+M-X103:39	013 .3	
+C-W403	12	+C-X004:50	+M-X103:41	023 .7	
+C-W403	13	+C-X004:51	+M-X103:44	023 .7	
+C-W403	14	+C-X004:52	+M-X103:50	032 .7	
+C-W403	15	+C-X004:53	+M-X103:54	013 .7	
+C-W403	16	+C-X004:54	+M-X103:56	013 .7	
+C-W403	17	+C-X004:55	+M-X103:57	025 .7	
+C-W403	18	+C-X004:56	+M-X103:60	025 .7	
	19				
	20				
	21				
	22				
	23				
	24				
+C-W403	GNYE	+C-X004:E7	+M-X103:E8	013 .7	
+C-W405	1	+C-X004:59	+M-X105:1+	026 .3	
+C-W405	2	+C-X004:60	+M-X105:2+	026 .3	
+C-W405	3	+C-X004:61	+M-X105:3+	026 .3	
+C-W405	4	+C-X004:62	+M-X105:4+	026 .3	
+C-W405	5	+C-X004:63	+M-X105:5+	026 .3	

Drawing remarks

Tetra Pak

Designer JNT	Date 06/03/03	Machine Tetra Cap Applicator 47	
ECM No 135544	Denomination CABLE CONNECTION LIST	Page Type CABLE CONNECTION LIST	
Company Tetra Pak Carton Ambient AB	Document No. 2543127-0007	Doc. type ELD	Version AB	Page 005

RELEASED

This drawing must not without the consent of Tetra Pak be copied, transmitted or disclosed to any third party.

1 2 3 4 5 6 7 8 9 10

Cable Connection List of 2543127-0003

Cable	Core	From	To	Page.Col.	Option
+C-W405	6	+C-X004:64	+M-X105:6+	029 .4	
+C-W405	7	+C-X004:65		029	
+C-W405	8	+C-X004:66		029	
+C-W405	9	+C-X004:67		029	
+C-W405	10	+C-X004:68		029	
+C-W405	11	+C-X004:69		029	
+C-W405	12	+C-X004:70	+M-X105:1-	026 .7	
+C-W405	13	+C-X004:71	+M-X105:6-	029 .7	
+C-W405	GNYE	+C-X004:E9	+M-X105:E1	026 .7	
+C-W409	1	+C-X004:103	+M-X109:1	014 .3	
+C-W409	2	+C-X004:104	+M-X109:3	014 .3	
+C-W409	3	+C-X004:105	+M-X109:7	021 .3	
+C-W409	4	+C-X004:106	+M-X109:8	021 .6	
+C-W409	5	+C-X004:120	+M-X109:45	013 .4	
+C-W409	6	+C-X004:94	+M-X109:47	013 .4	
+C-W409	7	+C-X004:107	+M-X109:9	031 .3	
+C-W409	8	+C-X004:108	+M-X109:10	031 .7	
+C-W409	9	+C-X004:109	+M-X109:13	024 .7	
+C-W409	10	+C-X004:110	+M-X109:16	024 .7	
+C-W409	11	+C-X004:111	+M-X109:22	033 .6	
+C-W409	12	+C-X004:119	+M-X109:44	013 .3	
+C-W409	13	+C-X004:113	+M-X109:27	032 .7	
+C-W409	14	+C-X004:114	+M-X109:28	030 .4	
+C-W409	15	+C-X004:115	+M-X109:30	032 .7	
+C-W409	16	+C-X004:116	+M-X109:33	032 .7	
+C-W409	17	+C-X004:117	+M-X109:41	014 .8	
+C-W409	18	+C-X004:118	+M-X109:43	014 .8	

Cable	Core	From	To	Page.Col.	Option
+C-W409	19	+C-X004:93	+M-X109:46	013 .3	
+C-W409	20	+C-X004:112	+M-X109:23	024 .7	
	21				
	22				
	23				
	24				
+C-W409	GNYE	+C-X004:E19	+M-X109:E6	032 .3	
+C-W503	1	+M-X103:1	+C-X004:27	022 .4	
+C-W503	2	+M-X103:2	+C-X004:28	022 .4	
+C-W503	3	+M-X103:3	+C-X004:29	022 .4	
+C-W503	4	+M-X103:4	+C-X004:30	022 .4	
+C-W503	5	+M-X103:5	+C-X004:31	022 .4	
+C-W503	6	+M-X103:6	+C-X004:32	022 .4	
+C-W503	7	+M-X103:7	+C-X004:33	022 .4	
+C-W503	8	+M-X103:8	+C-X004:34	022 .4	
+C-W503	9	+M-X103:9	+C-X004:35	022 .4	
+C-W503	10	+M-X103:10	+C-X004:36	022 .4	
+C-W503	11	+M-X103:11	+C-X004:37	022 .4	
+C-W503	GNYE	+M-X103:E2	+C-X004:E5	022 .4	
+C-W600	1	+M-X105:5+	+M-Y100:	026 .4	
+C-W600	2	+M-X105:5-	+M-Y100:	026 .5	
+C-W600	GNYE	+M-X105:E5	+M-Y100:	026 .5	
+C-W608	1	+M-X105:1+	+M-Y108:	026 .4	
+C-W608	2	+M-X105:1-	+M-Y108:	026 .5	
+C-W608	GNYE	+M-X105:E1	+M-Y108:	026 .5	
+C-W610	1	+M-X103:26	+M-Y920:1	029 .5	
+C-W610	2	+M-X103:27	+M-Y920:2	029 .6	

Drawing remarks

Tetra Pak

Designer	Date	Machine
JNT	06/03/03	Tetra Cap Applicator 47

ECM No	Denomination	Page Type
135544	CABLE CONNECTION LIST	CABLE CONNECTION LIST

Company	Document No.	Doc. type	Version	Page
Tetra Pak Carton Ambient AB	2543127-0007	ELD	AB	006

RELEASED

This drawing must not without the consent of Tetra Pak be copied, transmitted or disclosed to any third party.

1 2 3 4 5 6 7 8 9 10

Cable Connection List of 2543127-0003

Cable	Core	From	To	Page.Col.	Option
+C-W610	GNYE	+M-X103:E3	+M-Y920:E	029 .6	
+C-W614	1	+M-X105:6+	+M-Y114:	029 .5	
+C-W614	2	+M-X105:6-	+M-Y114:	029 .6	
+C-W614	GNYE	+M-X105:E6	+M-Y114:	029 .6	
+C-W641	1	+M-X102:11	+M-Y141:1	026 .4	
+C-W641	2	+M-X102:12	+M-Y141:2	026 .5	
+C-W641	GNYE	+M-X102:E3	+M-Y141:E	026 .5	
+C-W642	1	+M-X102:26	+M-Y142:1	026 .4	
+C-W642	2	+M-X102:27	+M-Y142:2	026 .5	
+C-W642	GNYE	+M-X102:E5	+M-Y142:E	026 .5	
+C-W650	1	+C-X004:95	+M-Y950:1	015 .4	X
+C-W650	2	+C-X004:96	+M-Y950:2	015 .5	X
+C-W650	GNYE	+C-X004:E16	+M-Y950:E	015 .5	X
+C-W660	1	+M-X105:2+	+M-Y160:	026 .4	
+C-W660	2	+M-X105:2-	+M-Y160:	026 .5	
+C-W660	GNYE	+M-X105:E2	+M-Y160:	026 .5	
+C-W661	1	+M-X105:3+	+M-Y161:	026 .4	
+C-W661	2	+M-X105:3-	+M-Y161:	026 .5	
+C-W661	GNYE	+M-X105:E3	+M-Y161:	026 .5	
+C-W662	1	+M-X105:4+	+M-Y162:	026 .4	
+C-W662	2	+M-X105:4-	+M-Y162:	026 .5	
+C-W662	GNYE	+M-X105:E4	+M-Y162:	026 .5	
+C-W901	1	+C-X004:97	+M-X901:1	021 .6	
+C-W901	2	+C-X004:98	+M-X901:5A	021 .3	
+C-W901	3	+C-X004:99	+M-X901:5B	030 .1	
+C-W901	4	+C-X004:100	+M-X901:3	021 .6	
+C-W901	5	+C-X004:101	+M-X901:5	030 .4	

Cable	Core	From	To	Page.Col.	Option
+C-W901	6	+C-X004:102		030	
+C-W901	GNYE	+C-X004:E17	+M-X901:E2	030 .7	
+C-W902	BN	+M-X901:1A	+M-B901.1:	021 .4	
+C-W902	BU	+M-X901:1B	+M-B901.1:	021 .4	
+C-W903	BN	+M-X901:2A	+M-B901.2:	021 .5	
+C-W903	BU	+M-X901:2B	+M-B901.2:	021 .5	
+C-W903	BK	+M-X901:1	+M-B901.2:	021 .5	
+C-W904	BN	+M-X901:3A	+M-B902.1:	021 .4	
+C-W904	BU	+M-X901:3B	+M-B902.1:	021 .4	
+C-W905	BN	+M-X901:4A	+M-B902.2:	021 .5	
+C-W905	BU	+M-X901:4B	+M-B902.2:	021 .5	
+C-W905	BK	+M-X901:3	+M-B902.2:	021 .5	
+C-W906	1	+M-X901:5	+M-Y901:1	030 .5	
+C-W906	2	+M-X901:5B	+M-Y901:2	030 .6	
+C-W906	GNYE	+M-X901:E2	+M-Y901:E	030 .6	
+C-W907	BN	+M-X101:1	+M-B903.1:	023 .4	
+C-W907	BU	+M-X101:2	+M-B903.1:	023 .4	
+C-W908	BN	+M-X101:4	+M-B903.2:	023 .5	
+C-W908	BU	+M-X101:5	+M-B903.2:	023 .5	
+C-W908	BK	+M-X101:3	+M-B903.2:	023 .6	
+C-W909	BN	+M-X101:6	+M-B904.1:	023 .4	
+C-W909	BU	+M-X101:7	+M-B904.1:	023 .4	
+C-W910	BN	+M-X101:9	+M-B904.2:	023 .5	
+C-W910	BU	+M-X101:10	+M-B904.2:	023 .5	
+C-W910	BK	+M-X101:8	+M-B904.2:	023 .6	
+C-W914	1	+M-X109:24	+M-X914:1	024 .3	
+C-W914	2	+M-X109:25	+M-X914:2	024 .3	

Drawing remarks

Tetra Pak

Designer JNT	Date 06/03/03	Machine Tetra Cap Applicator 47			
ECM No 135544	Denomination CABLE CONNECTION LIST	Page Type CABLE CONNECTION LIST			
Company Tetra Pak Carton Ambient AB	Document No. 2543127-0007	Doc. type ELD	Version AB	Page 007	

RELEASED

This drawing must not without the consent of Tetra Pak be copied, transmitted or disclosed to any third party.

1 2 3 4 5 6 7 8 9 10

Cable Connection List of 2543127-0003

Cable	Core	From	To	Page.Col.	Option
+C-W914	3	+M-X109:23	+M-X914:3	024 .6	
+C-W914	4	+M-X109:22	+M-X914:6	033 .6	
+C-W914	GNYE	+M-X109:E3	+M-X914:E1	024 .3	
+C-W915	1	+C-X004:80	+M-X915:1	033 .3	X
+C-W915	2	+C-X004:81	+M-X915:2	033 .3	X
+C-W915	3	+C-X004:82	+M-X915:3	033 .6	X
+C-W915	4	+C-X004:83	+M-X915:6	033 .6	X
+C-W915	5	+C-X004:84	+M-X915:9	033 .6	X
	6				
+C-W915	GNYE	+C-X004:E13	+M-X915:E1	033 .6	X
+C-W916	BN	+M-X915:10	+M-B916:	033 .4	X
+C-W916	BU	+M-X915:11	+M-B916:	033 .4	X
+C-W916	BK	+M-X915:9	+M-B916:	033 .5	X
+C-W917	BU	+M-X915:5	+M-B917.2:	033 .4	X
+C-W917	BN	+M-X915:4	+M-B917.2:	033 .4	X
+C-W917	BK	+M-X915:3	+M-B917.2:	033 .5	X
+C-W918	BN	+M-X915:7	+M-B918:	033 .4	X
+C-W918	BU	+M-X915:8	+M-B918:	033 .4	X
+C-W918	BK	+M-X915:6	+M-B918:	033 .5	X
+C-W920	BU	+M-X914:8	+M-B906:	033 .4	X
+C-W920	BN	+M-X914:7	+M-B906:	033 .4	X
+C-W920	BK	+M-X914:6	+M-B906:	033 .5	X
+C-W921	BU	+M-X914:5	+M-B905.2:	024 .5	
+C-W921	BN	+M-X914:4	+M-B905.2:	024 .5	
+C-W921	BK	+M-X914:3	+M-B905.2:	024 .5	
+C-W922	BU	+M-X914:2	+M-B905.1:	024 .4	
+C-W922	BN	+M-X914:1	+M-B905.1:	024 .4	

Cable	Core	From	To	Page.Col.	Option
+C-W924	1	+M-X101:16	+M-X924:3	023 .6	X
+C-W924	2	+M-X101:17	+M-X924:1	023 .4	X
+C-W924	3	+M-X101:18	+M-X924:2	023 .4	X
+C-W924	GNYE	+M-X101:E2	+M-X924:E1	023 .4	X
+C-W925	BN	+M-X924:4	+M-B925:	023 .4	X
+C-W925	BU	+M-X924:5	+M-B925:	023 .4	X
+C-W925	BK	+M-X924:3	+M-B925:	023 .5	X
+C-W927	BU	+M-X915:2	+M-B917.1:	033 .4	X
+C-W927	BN	+M-X915:1	+M-B917.1:	033 .4	X
+C-W990	1	+C-K099:4	+C-U.S. MACHINE:	016 .6	X
+C-W990	2	+C-K099:3	+C-U.S. MACHINE:	016 .3	X
+C-W990	3	+C-X090:5	+C-U.S. MACHINE:	016 .6	X
+C-W990	4	+C-X090:6	+C-U.S. MACHINE:	016 .6	X
+C-W990	GNYE	+C-X090:E3	+C-U.S. MACHINE:E	016 .6	X
+C-W990L	1	+C-X090:1	+C-D.S. MACHINE:	016 .6	X
+C-W990L	2	+C-X090:2	+C-D.S. MACHINE:	016 .6	X
+C-W990L	3	+C-K098:4	+C-D.S. MACHINE:	016 .6	X
+C-W990L	4	+C-K098:3	+C-D.S. MACHINE:	016 .3	X
+C-W990L	GNYE	+C-X090:E2	+C-D.S. MACHINE:E	016 .6	X
+C-W990R	1	+C-X090:7	+C-D.S. MACHINE:	016 .6	X
+C-W990R	2	+C-X090:8	+C-D.S. MACHINE:	016 .6	X
+C-W990R	3	+C-K098:5	+C-D.S. MACHINE:	016 .6	X
+C-W990R	4	+C-K098:6	+C-D.S. MACHINE:	016 .3	X
+C-W990R	GNYE	+C-X090:E4	+C-D.S. MACHINE:E	016 .6	X
+C-W991	1	+C-K099:5	+C-READY SIGNAL:	016 .6	X
+C-W991	2	+C-K099:6	+C-READY SIGNAL:	016 .3	X
+C-W997	GNYE	+C-X004:E24	+C-J027:	003 .1	

Drawing remarks

Tetra Pak

Designer JNT	Date 06/03/03	Machine Tetra Cap Applicator 47	
ECM No 135544	Denomination CABLE CONNECTION LIST	Page Type CABLE CONNECTION LIST	
Company Tetra Pak Carton Ambient AB	Document No. 2543127-0007	Doc. type ELD	Version AB / Page 008

RELEASED

This drawing must not without the consent of Tetra Pak be copied, transmitted or disclosed to any third party.

1 2 3 4 5 6 7 8 9 10

Cable Connection List of 2543127-0003

Cable	Core	From	To	Page.Col.	Option
+C-W998	GNYE	+C-X004:E25	+C-J026:	003 .2	
+C-W999	GNYE	+C-X002:E1	+C-J025:	003 .3	

Cable	Core	From	To	Page.Col.	Option

Drawing remarks	Tetra Pak	Designer JNT	Date 06/03/03	Machine Tetra Cap Applicator 47	
		ECM No 135544	Denomination CABLE CONNECTION LIST	Page Type CABLE CONNECTION LIST	
		Company Tetra Pak Carton Ambient AB	Document No. 2543127-0007	Doc. type ELD / Version AB	Page 009

This page intentionally left blank

EM1.1TH900624en.fm

12 Mains connection

EM1.1TH900625en.fm

This page intentionally left blank

EM1.1TH900625en.fm

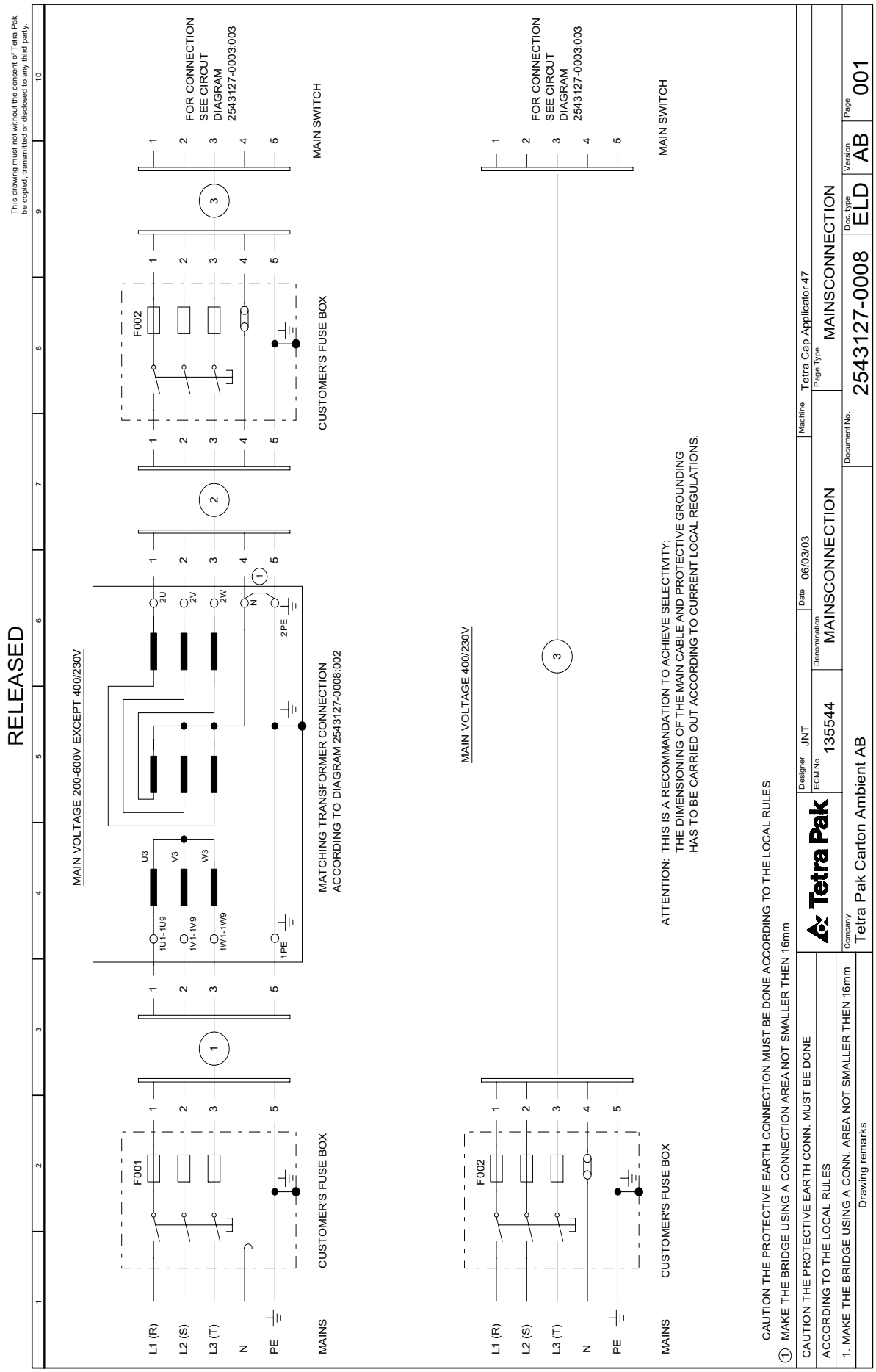
EM1.1TH900625en.fm
RELEASED
This drawing must not without the consent of Tetra Pak be copied, transmitted or disclosed to any third party.
MAIN VOLTAGE 200-600V EXCEPT 400/230V
L1 (R)
L2 (S)
L3 (T)
N
PE
MAINS
F001
CUSTOMER'S FUSE BOX
U3
V3
W3
1U1-1U9
1V1-1V9
1W1-1W9
1PE
2U
2V
2W
N
2PE
MATCHING TRANSFORMER CONNECTION
ACCORDING TO DIAGRAM 2543127-0008:002
F002
CUSTOMER'S FUSE BOX
FOR CONNECTION
SEE CIRCUIT
DIAGRAM
2543127-0003:003
MAIN SWITCH
MAIN VOLTAGE 400/230V
L1 (R)
L2 (S)
L3 (T)
N
PE
MAINS
F002
CUSTOMER'S FUSE BOX
FOR CONNECTION
SEE CIRCUIT
DIAGRAM
2543127-0003:003
MAIN SWITCH
ATTENTION: THIS IS A RECOMMANDATION TO ACHIEVE SELECTIVITY;
THE DIMENSIONING OF THE MAIN CABLE AND PROTECTIVE GROUNDING
HAS TO BE CARRIED OUT ACCORDING TO CURRENT LOCAL REGULATIONS.
CAUTION THE PROTECTIVE EARTH CONNECTION MUST BE DONE ACCORDING TO THE LOCAL RULES
① MAKE THE BRIDGE USING A CONNECTION AREA NOT SMALLER THEN 16mm
CAUTION THE PROTECTIVE EARTH CONN. MUST BE DONE
ACCORDING TO THE LOCAL RULES
1. MAKE THE BRIDGE USING A CONN. AREA NOT SMALLER THEN 16mm
Drawing remarks
Tetra Pak
Designer JNT
ECM No 135544
Date 06/03/03
Denomination MAINSCONNECTION
Machine Tetra Cap Applicator 47
Page Type MAINSCONNECTION
Company Tetra Pak Carton Ambient AB
Document No. 2543127-0008
Doc. type ELD
Version AB
Page 001

RELEASED

This drawing must not without the consent of Tetra Pak be copied, transmitted or disclosed to any third party.

MAIN VOLTAGE	FUSES (SLOW) 1 F001	AREA TO CU CABLES NO. 1	AREA TO CU CABLES NO. 2	AREA TO CU CABLES NO. 2	FUSES (SLOW) 1 F002	CONNECTIONS ON MATCHING TRANSFORMER			CONNECT
V	A	mm²	mm²	mm²	A	MAINS		TAP	
600/347 3x600	32	3x4/4	4x4/4	4x4/4	20	PHASE	L1	1U9	1U3 - U4
						PHASE	L2	1V9	1V3 - V4
						PHASE	L3	1W9	1W3 - W4
						N	N	N	
						GROUND	PE	⏚	
550/318 3x550	32	3x4/4	4x4/4	4x4/4	20	PHASE	L1	1U8	1U3 - U4
						PHASE	L2	1V8	1V3 - V4
						PHASE	L3	1W8	1W3 - W4
						N	N	N	
						GROUND	PE	⏚	
500/289 3x500	32	3x4/4	4x4/4	4x4/4	20	PHASE	L1	1U7	1U3 - U4
						PHASE	L2	1V7	1V3 - V4
						PHASE	L3	1W7	1W3 - W4
						N	N	N	
						GROUND	PE	⏚	
480/277 3x480	32	3x4/4	4x4/4	4x4/4	20	PHASE	L1	1U6	1U3 - U4
						PHASE	L2	1V6	1V3 - V4
						PHASE	L3	1W6	1W3 - W4
						N	N	N	
						GROUND	PE	⏚	
440/254 3x440	32	3x4/4	4x4/4	4x4/4	20	PHASE	L1	1U5	1U2 - U4
						PHASE	L2	1V5	1V2 - V4
						PHASE	L3	1W5	1W2 - W4
						N	N	N	
						GROUND	PE	⏚	
415/240 3x415	32	3x4/4	4x4/4	4x4/4	20	PHASE	L1	1U5	1U1 - U4
						PHASE	L2	1V5	1V1 - V4
						PHASE	L3	1W5	1W1 - W4
						N	N	N	
						GROUND	PE	⏚	
400/230 380/220				4x4/4	20	PHASE	L1	1U4	1U1 - U4
						PHASE	L2	1V4	1V1 - V4
						PHASE	L3	1W4	1W1 - W4
						N	N	N	
						GROUND	PE	⏚	
240/140 3x240	80	3x16/16	4x4/4	4x4/4	20	PHASE	L1	1U3	U3 - U4 1U3-1U6
						PHASE	L2	1V3	V3 - V4 1V3-1V6
						PHASE	L3	1W3	W3 - W4 1W3-1W6
						N	N	N	
						GROUND	PE	⏚	
220/127 3x220	80	3x16/16	4x4/4	4x4/4	20	PHASE	L1	1U2	U3 - U4 1U2-1U5
						PHASE	L2	1V2	V3 - V4 1V2-1V5
						PHASE	L3	1W2	W3 - W4 1W2-1W5
						N	N	N	
						GROUND	PE	⏚	
200/115 3x200	80	3x16/16	4x4/4	4x4/4	20	PHASE	L1	1U1	U3 - U4 1U1-1U4
						PHASE	L2	1V1	V3 - V4 1V1-1V4
						PHASE	L3	1W1	W3 - W4 1W1-1W4
						N	N	N	
						GROUND	PE	⏚	

MATCHING TRANSFORMER
90245-0024

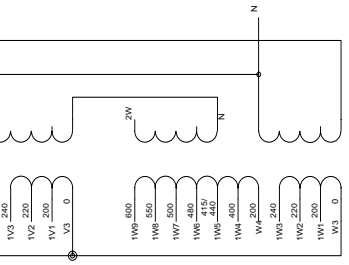

1. RECOMMENDED MAIN FUSE TO ACHIEVE SELECTIVITY

Drawing remarks

Tetra Pak

Designer JNT
ECM No 135544

Date 06/03/03
Denomination MAINSCONNECTION

Machine Tetra Cap Applicator 47
Page Type MAINSCONNECTION

Company Tetra Pak Carton Ambient AB

Document No. 2543127-0008
Doc. type ELD
Version AB
Page 002

EM1.1TH900625en.fm

13 Program documents

EM1.1TH900627en.fm

This page intentionally left blank

EM1.1TH900627en.fm

Tetra Pak Carton Ambient AB

48463-0002 ELD 001 AD

Distribution Systems

Page 1/2

Machine type:	**Tetra Cap Applicator 47**
ECM No:	**135545**
Signature/date:	**JNT/030612**

Down time signals

Register: 922 Tag name, "intouch":DET 8600 Tag name, "intouch":DET

	Description	Tag Nbr. **)	Stop *)	PLC Bit Hex	PLC Bit Dec	Stop code TPOP	Memory Bit	Alarms Nick names
1	Emergency stop	00	DT	1	1	8610		
2	Spare	01	DT	2	2	8611		
3	Door open applicator	02	DT	4	4	8612		
4	Motor protection	03	DT	8	8	8613		
5	Equipment stop 1 (index out of pos)	04	DT	10	16	8614		
6	Equipment stop 2	05	DT	20	32	8615		
7	Spare	06	DT	40	64	8616		
8	Door open infeeder	07	DT	80	128	8617		
9	Frequency converter	08	DT	100	256	8618		
10	Spare	09	DT	200	512	8619		
11	Fallen package	10	DT	400	1024	8620		
12	No package to infeed	11	DT	800	2048	8621		
13	Hotmelt temperature	12	DT	1000	4096	8622		
14		13	DT	2000	8192	8623		
15	Jammed outfeed	14	DT	4000	16384	8624		
16		15	DT	8000	32768	8625		

Down time signals

Register: 923 Tag name, "intouch":DET 8600 _EVENTS1.xx

	Description	Tag Nbr. **)	Stop *)	PLC Bit Hex	PLC Bit Dec	Stop code TPOP	Memory Bit	Alarms Nick names
1	No cap at pusher	16	DT	1	1	8626		
2	Cap pusher	17	DT	2	2	8627		
3	Cap missed on package	18	DT	4	4	8628		
4		19	DT	8	8	8629		
5	No rotate infeeder	20	DT	10	16	8630		
6	No cap queue	21	DT	20	32	8631		
7		22	DT	40	64	8632		
8	Lead rail	23	DT	80	128	8633		
9		24	DT	100	256	8634		
10	Queue cap detector	25	DT	200	512	8635		
11	Preheater	26	DT	400	1024	8636		
12	Cap on carrier	27	DT	800	2048	8637		
13	Safety clutch main motor	28	DT	1000	4096	8638		
14		29	DT	2000	8192	8639		
15		30	DT	4000	16384	8640		
16	NOT USED	31	--	8000	32768	8641		

*) IS - Information signal
DT - Down time
IT - Idle time
AT - Ancillery time
**) Tag name for register 922, 923 ("Intouch"):
DET9900_Events1.XX (XX=Tag nbr.)

DE-1222-05

EM1.1TH900627en.fm

Tetra Pak Carton Ambient AB

48463-0002 ELD 001 AD

Distribution Systems

Page 2/2

Machine type:	**Tetra Cap Applicator 47**
ECM No:	**135545**
Signature/date:	**JNT/030612**

Miscellaneous signals

Register: 924 Tag name, "intouch":DET 8600 Tag name, "intouch":DET

	Description	Tag Nbr.	Stop	PLC Bit		Stop code	Memory	Alarms
		**)	*)	Hex	Dec	TPOP	Bit	Nick names
1	DE External enable signal	00	IS	1	1	8650		
2	DE production time	01	IS	2	2	8651		
3	No cap	02	IS	4	4	8652		
4	Information signal 1	03	IS	8	8	8653		
5	Information signal 2	04	IS	10	16	8654		
6	Electrical alarm	05	IS	20	32	8655		
7	Lubrication	06	IS	40	64	8656		
8	Ladder step OFF	07	IS	80	128	8657		
9	Ladder step PREPARATION	08	IS	100	256	8658		
10	Ladder step PRODUCTION	09	IS	200	512	8659		
11	Supervision of air pressure (low)	10	IT	400	1024	8670		
12	Open chute	11	IT	800	2048	8671		
13	Queue outfeed	12	IT	1000	4096	8672		
14	Manual step down	13	IT	2000	8192	8673		
15	Low level paddle elevator	14	IT	4000	16384	8674		
16	NOT USED	15	--	8000	32768	8675		

Miscellaneous signals

Register: 925 Tag name, "intouch":DET 8600 _EVENTS1.xx

	Description	Tag Nbr.	Stop	PLC Bit		Stop code	Memory	Alarms
		**)	*)	Hex	Dec	TPOP	Bit	Nick names
1		16	IT	1	1	8676		
2		17	IT	2	2	8677		
3	Low level infeeder	18	IT	4	4	8678		
4		19	IT	8	8	8679		
5		20	IT	10	16	8680		
6		21	IT	20	32	8681		
7	Idle stop 1	22	IT	40	64	8682		
8	Idle stop 2	23	IT	80	128	8683		
9	Idle stop 3	24	IT	100	256	8684		
10		25	AT	200	512	8685		
11		26	AT	400	1024	8686		
12		27	AT	800	2048	8687		
13		28	AT	1000	4096	8688		
14		29	AT	2000	8192	8689		
15		30	AT	4000	16384	8690		
16	NOT USED	31	--	8000	32768	8691		

*) IS - Information signal
DT - Down time
IT - Idle time
AT - Ancillery time
**) Tag name for register 924, 925 ("Intouch"):
DET9900_EVENTS2.XX (XX=Tag nbr.)

DE-1222-05

EM1.1TH900627en.fm

```
06-16-03  10:35                          GE FANUC SERIES 90-30/90-20/MICRO (v9.02)                          Page     1
                                              Tetra Cap Applicator 47 -0100
                                         48463-0001 ELD 001 AD 030612 JNT ECM:135545

[  START OF LD  PROGRAM D484631  ]       (* TETRA CAP APPLICATOR 47          *)

[     VARIABLE DECLARATIONS      ]

[       BLOCK DECLARATIONS       ]

       SUBR  2  PLMS_5        LANG: LD  (* Signals for PLMS                *)

 .001 INTR 0001  1T0001       LANG: LD  (* Angle encoder,Hot melt;Cap detec *)

[     START OF PROGRAM LOGIC     ]

 >>>>
```

```
06-16-03  10:35                    GE FANUC SERIES 90-30/90-20/MICRO (v9.02)                    Page     2
                                          Tetra Cap Applicator 47 -0100
                                   48463-0001 ELD 001 AD 030612 JNT ECM:135545

 (*************************************************************************)
 (*                                                                       *)
 (* MACHINE ADAPTION                                                      *)
 (*                                                                       *)
 (*************************************************************************)

 >>>>
```

06-16-03 10:35 GE FANUC SERIES 90-30/90-20/MICRO (v9.02) Page 3
Tetra Cap Applicator 47 -0100
48463-0001 ELD 001 AD 030612 JNT ECM:135545

<< RUNG 12 STEP #0016 >>

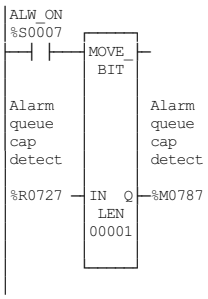

Program: D484631 C:\LM90\TCAP47\D484631 Block: _MAIN

```
06-16-03  10:35                    GE FANUC SERIES 90-30/90-20/MICRO (v9.02)                    Page     4
                                          Tetra Cap Applicator 47 -0100
                                     48463-0001 ELD 001 AD 030612 JNT ECM:135545

 (*************************************************************************)
 (*                                                                       *)
 (* START AND STOP SEQUENCE                                               *)
 (*                                                                       *)
 (*************************************************************************)

Pulse                                                                << RUNG 14  STEP #0019 >>
End
mplx
train   Flash
         FLASH                                          FLASH
%T0006  %M0003                                         %M0003
──┤ ├────┤/├──────────────────────────────────────────( )──  (* Flash                          *)
 0368    0014                                                  Cross reference for FLASH
Pulse                                                          -] [- 14,15,43,45,215,218,221,227,230,235,240,243,
End                                                                247,252,255,261,264,269,276,281,291,295,301,
mplx                                                               304,310,315,319,325,334,337,339,357,359,360,
train   Flash                                                      361
         FLASH                                                 -]/[- 14
%T0006  %M0003
──┤/├────┤ ├──┘
 0368    0014

Flash                                                                << RUNG 15  STEP #0025 >>
 FLASH
%M0003                                                 %T0005
──┤ ├──────────────────────────────────────────────────(^)──  (* Pulse fast flash                *)
 0014                                                          Cross reference for %T0005
                                                               -] [- 16
                                                               -]/[- 16

Pulse                                                                << RUNG 16  STEP #0027 >>
fast    Slow
flash   flash
        S_FLASH                                        S_FLASH
%T0005  %M0001                                         %M0001
──┤ ├────┤/├──────────────────────────────────────────( )──  (* Slow flash                     *)
 0015    0016                                                  Cross reference for S_FLASH
                                                               -] [- 16,339
Pulse                                                          -]/[- 16
fast    Slow
flash   flash
        S_FLASH
%T0005  %M0001
──┤/├────┤ ├──┘
 0015    0016

Step up                                                              << RUNG 17  STEP #0033 >>
push
button
 S01H                                                   S01H_
%I0005                                                 %T0003
──┤ ├──────────────────────────────────────────────────(^)──  (* Pulse Step up                  *)
                                                               Cross reference for S01H_
                                                               -] [- 18,69,98,122
                                                               -]/[- 70,72,271

        Step                                                         << RUNG 18  STEP #0035 >>
        down    Ready
Pulse   push    to Step
Step up button  up      Step 3
 S01H_   S02H           STEP_3
%T0003  %I0006  %M0004  %M0103                         %T0001
──┤ ├────┤/├────┤ ├────┤/├──────────────────────────(^)──  (* Pulse Step up                  *)
 0017            0024    0034                                  Cross reference for %T0001
                                                               -] [- 21,28,30,33

Step                                                                 << RUNG 19  STEP #0040 >>
down
push
button
 S02H                                                   S02H_
%I0006                                                 %T0002
──┤ ├──────────────────────────────────────────────────(^)──  (* Pulse Step down                *)
                                                               Cross reference for S02H_
                                                               -] [- 22
                                                               -]/[- 30,33

Program: D484631                          C:\LM90\TCAP47\D484631                          Block: _MAIN
```

EM1.1TH900627en.fm

```
06-16-03  10:35                    GE FANUC SERIES 90-30/90-20/MICRO (v9.02)                    Page     5
                                        Tetra Cap Applicator 47 -0100
                                   48463-0001 ELD 001 AD 030612 JNT ECM:135545

|        Step                                                                  << RUNG 20  STEP #0042 >>
|Air     down
|press   push
|switch  button  Step 2
| B100    S02H   STEP_2
|%I0004  %I0006  %M0102                                          %M0007
|──┤/├──────┤ ├──────┤/├──┌──────┐──────────────────────────────( )──  (* Delay Step down                  *)
|                 0030    │ TMR  │                                      Cross reference for %M0007
|                         │0.10s │                                      -]/[- 28
|                 CONST ──│ PV   │
|                 +00020  └──────┘
|
|                         Delay
|                         Step
|                         down
|
|                         %R0028
|
|Pulse                                                                         << RUNG 21  STEP #0047 >>
|Step up
|                                                                STEP_0
|%T0001                                                          %M0100
|──┤ ├──────────────────────────────────────────────────────────(S)──  (* Step 0                          *)
| 0018                                                                   Cross reference for STEP_0
|                                                                        -] [- 27,29,43,46,51,53,54,115,215,216,218,221,
|                                                                              227,230,235,240,243,245,247,252,255,259,261,
|                                                                              264,269,276,281,291,295,301,304,308,310,315,
|                                                                              319,325,334,337,339,357,359,360,361
|                                                                        -]/[- 24,44,142
|                                                                        -(R)  22
|
|Pulse                                                                         << RUNG 22  STEP #0049 >>
|Step
|down    Step 1
| S02H_  STEP_1                                                  STEP_0
|%T0002  %M0101                                                  %M0100
|──┤ ├──────┤/├──────────────────────────────────────────────────(R)──  (* Step 0                          *)
| 0019    0028                                                           Cross reference for STEP_0
|                                                                        -] [- 27,29,43,46,51,53,54,115,215,216,218,221,
|                                                                              227,230,235,240,243,245,247,252,255,259,261,
|                                                                              264,269,276,281,291,295,301,304,308,310,315,
|                                                                              319,325,334,337,339,357,359,360,361
|                                                                        -]/[- 24,44,142
|                                                                        -(S)  21
|
|                        Alarm                  Alarm   Door    Alarm          << RUNG 23  STEP #0052 >>
|        Em stop Motor   freque  Alarm   Alarm  motor   applica angle
|Em stop circuit prot    convert Em stop doors  prot    tor     encoder
|  L12           MOTORS                          L13
|%I0001  %I0002  %I0003  %M0036  %M0030  %M0031  %M0032  %I0013  %M0710
|──┤ ├──────┤ ├──────┤ ├──────┤/├──────┤/├──────┤/├──────┤ ├──────┤/├──────<+>
|                         0239    0214    0217    0220
|
|        Door                                                                  << RUNG 24  STEP #0062 >>
|        applica
|        tor     Check   Check
|        circuit K002    K003
|
|        %I0014  %M0088  %M0082                                  %M0004
|<+>──────┤ ├──────┤/├──────┤/├──┬──────────────────────────────( )──  (* Ready to Step up                *)
|                 0236    0237   │                                      Cross reference for %M0004
|                                │                                      -] [- 18,27,30,32,41,43,69
|Step 0                          │
|STEP_0                          │
|%M0100                          │
|──┤/├──────────────────────────┘
| 0022
|
|Step 3                                                                        << RUNG 25  STEP #0068 >>
|STEP_3
|%M0103                                                          %M0107
|──┤ ├──┬──────────────────────────────────────────────────────( )──  (* Been in Step 3 not below 2       *)
| 0034   │                                                                Cross reference for %M0107
|Been in │                                                                -] [- 25,78,120,248
|Step 3  │                                                                -]/[- 26
|not     │
|below 2 Step 2  │
|        STEP_2  │
|%M0107  %M0102  │
|──┤ ├──────┤ ├──┘
| 0025    0030
|
|Been in         No caps                                                       << RUNG 26  STEP #0073 >>
|Step 3          before
|not             station With
|below 2 Step 3  9       Cap     Step 2
|        STEP_3                  STEP_2
|%M0107  %M0103  %M0310  %M0210  %M0102                          %M0109
|──┤/├──────┤/├──────┤/├──────┤ ├──────┤ ├──────────────────────( )──  (* Inching machine                  *)
| 0025    0034    0127    0052    0030                                   Cross reference for %M0109
|                                                                        -] [- 45,133
|                                                                        -]/[- 41,123

Program: D484631                          C:\LM90\TCAP47\D484631                                Block: _MAIN
```

EM1.1TH900627en.fm

```
06-16-03  10:35                    GE FANUC SERIES 90-30/90-20/MICRO (v9.02)                    Page     6
                                        Tetra Cap Applicator 47 -0100
                                   48463-0001 ELD 001 AD 030612 JNT ECM:135545

                                                                                << RUNG 27  STEP #0079 >>
                 No
         Ready   yellow  No red  No
         to Step alarms  alarms  yellow
Step 0   up      on      on     leds on
STEP_0
%M0100  %M0004  %M0092  %M0098  %M0093                              %M0111
──┤ ├────┤ ├────┤ ├────┤ ├────┤ ├──────────────────────────────────( )──  (* Ready for Step 1                 *)
 0022    0024    0348    0355    0353                                      Cross reference for %M0111
                                                                           -] [- 28,43

         Ready   Delay                                                     << RUNG 28  STEP #0085 >>
Pulse    for     Step
Step up  Step 1  down
                         FST_SCN                                  STEP_1
%T0001  %M0111  %M0007  %S0001                                    %M0101
──┤ ├────┤ ├────┤/├────┤/├──────────────────────────────────────( )──  (* Step 1                           *)
 0018    0027    0020                                                      Cross reference for STEP_1
                                                                           -] [- 28,29,30,32,42,43,69,80,85,88,89,94,133,206,
Step 1          Step 2                                                           244,255,262,312
STEP_1          STEP_2                                                     -]/[- 22,43
%M0101          %M0102
──┤ ├────────────┤ ├──
 0028            0030

         Step up                                                           << RUNG 29  STEP #0093 >>
Step 0   LED     Step 2
STEP_0    H01S   STEP_2                                              H001
%M0100  %M0145  %M0102                                            %M0129
──┤ ├────┤ ├────┤/├──────────────────────────────────────────────( )──  (* Step 1 lamp                      *)
 0022    0043    0030                                                      Cross reference for H001
                                                                           FBIO  369
Step 1
STEP_1
%M0101
──┤ ├──────────
 0028

         Ready   Pulse           Ready                                     << RUNG 30  STEP #0098 >>
Pulse    for     Step            to Step Go to
Step up  Step 2  down    Step 1  up      step 1
                  S02H_  STEP_1                                    STEP_2
%T0001  %M0112  %T0002  %M0101  %M0004  %M0115                    %M0102
──┤ ├────┤ ├────┤/├────┤ ├────┤ ├────┤ ├────┤/├──────────────────( )──  (* Step 2                           *)
 0018    0032    0019    0028    0024    0038                              Cross reference for STEP_2
                                                                           -] [- 25,26,28,30,31,33,40,43,48,66,67,69,77,80,
Step 2          Step 3                                                           81,82,92,97,102,103,113,139,147,148,152,155,
STEP_2          STEP_3                                                           159,163,185,204,253,266,271,278,285,296,297,
%M0102          %M0103                                                           330
──┤ ├────────────┤ ├──                                                     -]/[- 20,29,43,51,80,85,100,133,206,350,359
 0030            0034

Ready                                                                      << RUNG 31  STEP #0108 >>
for      Step up
Step 2   LED     Step 3
          H01S   STEP_3                                              H002
%M0112  %M0145  %M0103                                            %M0130
──┤ ├────┤ ├────┤/├──────────────────────────────────────────────( )──  (* Step 2 lamp                      *)
 0032    0043    0034                                                      Cross reference for H002
                                                                           FBIO  (369)
Step 2
STEP_2
%M0102
──┤ ├──────────
 0030

                                 No                                        << RUNG 32  STEP #0113 >>
         Air     Hotmelt Ready   yellow  No      No red
         press   unit    to Step alarms  yellow  alarms  Go to   Go to
Step 1   switch  ready   up      on      leds on on      step 1  step 1
STEP_1    B100
%M0101  %I0004  %I0044  %M0004  %M0087  %M0089  %M0098  %M0115  %M0116  %M0112
──┤ ├────┤/├────┤ ├────┤ ├────┤ ├────┤ ├────┤ ├────┤/├────┤ ├────( )──  (* Ready for Step 2                 *)
 0028            0024    0347    0352    0355    0038    0037              Cross reference for %M0112
                                                                           -] [- 30,31,43,359
                 With
                 Cap

                 %M0210
                 ──┤/├──
                  0052

Program: D484631                   C:\LM90\TCAP47\D484631                   Block: _MAIN
```

EM1.1TH900627en.fm

```
06-16-03  10:35                    GE FANUC SERIES 90-30/90-20/MICRO (v9.02)                    Page     7
                                        Tetra Cap Applicator 47 -0100
                                   48463-0001 ELD 001 AD 030612 JNT ECM:135545

                                Delay                Alarm   AlarmNo Alarm   Alarm
                                stop    Pulse        queue   package low     missing
        Ready                   main    Step         cap     to      hotmelt Cap on
Pulse   for                     motor   down         detect  infeed  temp    package
Step up Step 3  Step 2                   S02H_
                STEP_2                   %T0002
%T0001  %M0113  %M0102  %M0837  %T0002  %M0824  %M0821  %M0039  %M0816
──┤ ├────┤ ├────┤ ├────┤/├────┤/├────┤/├────┤/├────┤/├────┤/├──────<+>
 0018    0041    0030    0036    0019    0292    0258    0254
                                        Alarm
                                        queue
                                        cap
                                        detect
Step 3
STEP_3                                  %M0787
%M0103                                  ──┤/├──
──┤ ├──────────
 0034

        Cap
        chute
        closed
         B200
        %I0050                                                  STEP_3
                                                                %M0103
<+>─────┤ ├──────────────────────────────────────────────────────( )──
```

<< RUNG 33 STEP #0125 >>

<< RUNG 34 STEP #0138 >>

```
(* Step 3                                                                    *)
Cross reference for STEP_3
-] [- 25,30,33,39,92,100,122,123,177,183,187,194,
      290
-]/[- 18,26,31,43,66,67,80,81,92,103,118,134,152,
      173
```

<< RUNG 35 STEP #0141 >>

```
Alarm
no cap
at
pusher

%M0056                                                          %M0835
──┤ ├──────────────────────────────────────────────────────────( )──
 0290                                                           (* Stop main motor                                          *)
                                                                Cross reference for %M0835
Alarm                                                           -] [- 36
pre
heater

%M0921
──┤ ├──
 0338
```

<< RUNG 36 STEP #0144 >>

```
Stop
main
motor

%M0835                                                          %M0837
──┤ ├──┌──────┐──────────────────────────────────────────────( )──
 0035  │ TMR  │                                                (* Delay stop main motor                                   *)
       │0.10s │                                                Cross reference for %M0837
CONST ─│ PV   │                                                -]/[- 33,37,76,81
+00050 └──────┘
        Delay
        stop
        main
        motor

        %R0392
```

<< RUNG 37 STEP #0147 >>

```
Delay   Cap on
stop    carrier Alarm           Alarm   Index
main    before  lead    Jammed  cap     out of
motor   index   rail    outfeed pusher  pos.

%M0837  %M0270  %M0920  %M0870  %M0915  %M0615                  %M0116
──┤/├────┤/├────┤/├────┤/├────┤/├────┤/├──────────────────────( )──
 0036    0316    0312    0265    0298    0175                   (* Go to step 1                                            *)
                                                                Cross reference for %M0116
                                                                -] [- 32
                                                                -]/[- 38
```

```
06-16-03  10:35                    GE FANUC SERIES 90-30/90-20/MICRO (v9.02)                    Page     8
                                        Tetra Cap Applicator 47 -0100
                                   48463-0001 ELD 001 AD 030612 JNT ECM:135545

|        Cond                                                                << RUNG 38  STEP #0154 >>
|Go to   main
|step 1  motor
|
|%M0116  %M0265                                                   %M0115
|──┤/├────┤/├──────────────────────────────────────────────────────( )──  (* Go to step 1                    *)
|  0037   0082  |                                                          Cross reference for %M0115
|               |                                                          -]/[- 30,32
|Alarm          |
|air            |
|press          |
|               |
|%M0033         |
|──┤ ├──────────┤
|  0226         |
|Alarm          |
|air            |
|press          |
|LED            |
|  H009         |
|%M0154         |
|──┤ ├──────────┤
|  0227         |
|               |
|Alarm          |
|freque         |
|convert        |
|               |
|%M0036         |
|──┤ ├──────────┤
|  0239         |
|               |
|Alarm          |
|angle          |
|encoder        |
|               |
|%M0710         |
|──┤ ├──────────┘
|
|Ready                                                                       << RUNG 39  STEP #0161 >>
|for     Step up
|Step 3  LED
|         H01S                                                     H003
|%M0113  %M0145                                                    %M0131
|──┤ ├────┤ ├──────────────────────────────────────────────────────( )──  (* Step 3 lamp                    *)
|  0041   0043  |                                                          Cross reference for H003
|               |                                                          FBIO  (369)
|Step 3         |
|STEP_3         |
|%M0103         |
|──┤ ├──────────┘
|  0034
|
|                      AlarmNo Alarm   Alarm                               << RUNG 40  STEP #0165 >>
|        Air     No     package queue   hotmelt
|        press   freq.  to      cap     unit
|Step 2  switch  alarm  infeed  detect  LED
|STEP_2   B100   G010_MB                 H016
|%M0102  %I0004  %I0045 %M0821  %M0824  %M0134
|──┤ ├────┤ ├────┤ ├────┤/├────┤/├────┤/├──────────────────────────────<+>
|  0030                 0258    0292    0255
|
|                Alarm  No                                                   << RUNG 41  STEP #0172 >>
|        Ready   low    yellow No red                   Cap
|        to Step hotmelt alarms alarms Inching Cap in   chute
|        up      temp   on     on     machine machine  closed
|                                                        B200
|        %M0004  %M0039 %M0092 %M0098 %M0109 %M0117 %I0050          %M0113
|<+>────┤ ├────┤/├────┤ ├────┤ ├────┤/├────┤ ├────┤ ├──────────────( )──  (* Ready for Step 3                 *)
|         0024   0254   0348   0355   0026  | 0042 |                       Cross reference for %M0113
|                                           |      |                       -] [- 33,39,43
|                                           | With |
|                                           | Cap  |
|                                           |      |
|                                           | %M0210 |
|                                           └────┤/├──┘
|                                                0052
|
```

EM1.1TH900627en.fm

```
06-16-03  10:35                    GE FANUC SERIES 90-30/90-20/MICRO (v9.02)                    Page     9
                                        Tetra Cap Applicator 47 -0100
                                   48463-0001 ELD 001 AD 030612 JNT ECM:135545

Cap                                                                          << RUNG 42  STEP #0183 >>
conv
min
queue    Step 1
 B197    STEP_1
%I0047   %M0101                                                  %M0117
──┤ ├────┤ ├──────────────────────────────────────────────────────( )──  (* Cap in machine                    *)
         0028                                                            Cross reference for %M0117
Cap                                                                      -] [- 41,42
conv
max
queue
 B196
%I0046
──┤ ├──┐
         │
Cap in   │
machine  │
         │
%M0117   │
──┤ ├────┘
 0042

                 Ready                                                   << RUNG 43  STEP #0188 >>
                 for
Step 0   Step 1  Step 1          Flash
STEP_0   STEP_1                   FLASH                           H01S
%M0100   %M0101  %M0111          %M0003                          %M0145
──┤ ├────┤/├────┤ ├──────────────┤ ├──────────────────────────────( )──  (* Step up LED                      *)
 0022     0028    0027            0014                                   Cross reference for H01S
                                                                         -] [- 29,31,39
                 Ready                                                   FBIO  370
                 for
Step 1   Step 2  Step 2
STEP_1   STEP_2
%M0101   %M0102  %M0112
──┤ ├────┤/├────┤ ├──┐
 0028     0030    0032 │
                      │
                 Ready │
                 for  │
Step 2   Step 3  Step 3
STEP_2   STEP_3
%M0102   %M0103  %M0113
──┤ ├────┤/├────┤ ├──┐
 0030     0034    0041 │
                      │
         Ready        │
Infeed   to Step Outfeed
conv     up      jammed  Step 1
 K001             B121   STEP_1
%Q0017   %M0004  %I0033  %M0101
──┤/├────┤ ├────┤ ├────┤ ├──┘
 0071     0024          0028
                 Detect
                 of
                 package
                  B181
                 %I0035
                 ──┤ ├──

Step 0                                                                   << RUNG 44  STEP #0208 >>
STEP_0                                                           H02S
%M0100                                                           %M0146
──┤/├──────────────────────────────────────────────────────────( )──  (* Step down LED                    *)
 0022                                                                    Cross reference for H02S
                                                                         FBIO  (370)

                                                                         << RUNG 45  STEP #0210 >>
                                  Cap on  Alarm
                 Main             carrier queue   Alarm
Inching          motor   Jammed   before  cap     queue
machine  Flash   speed 2 outfeed  index   detect  outfeed
          FLASH  G002_S1                                          H05S
%M0109   %M0003  %Q0019  %M0870  %M0920  %M0270  %M0824  %M0825  %M0149
──┤ ├────┤ ├────┤/├────┤/├────┤/├────┤/├────┤/├────┤/├──────────( )──  (* Inching LED                      *)
 0026     0014    0087    0265    0312    0316    0292    0249           Cross reference for H05S
                                                                         FBIO  (370)
         Inching
          S05H
         %I0008
         ──┤ ├──┐
                 │
         Alarm   │
Alarm    clutch  │
angle    main    │
encoder  motor   Flash
                  FLASH
%M0710   %M0041  %M0003
──┤ ├────┤/├────┤ ├──┘
          0242    0014

Program: D484631                          C:\LM90\TCAP47\D484631                          Block: _MAIN
```

EM1.1TH900627en.fm

```
06-16-03  10:35                    GE FANUC SERIES 90-30/90-20/MICRO (v9.02)                    Page    10
                                        Tetra Cap Applicator 47 -0100
                                   48463-0001 ELD 001 AD 030612 JNT ECM:135545

│Step 0                                                                  << RUNG 46  STEP #0225 >>
│STEP_0                                                          K019
│%M0100                                                         %Q0039
├──┤ ├──────────────────────────────────────────────────────────( )──  (* Step 0                          *)
│ 0022                                                                  Cross reference for K019
│                                                                                 NONE
```

EM1.1TH900627en.fm

```
06-16-03  10:35                    GE FANUC SERIES 90-30/90-20/MICRO (v9.02)                    Page    11
                                        Tetra Cap Applicator 47 -0100
                                   48463-0001 ELD 001 AD 030612 JNT ECM:135545

 (*************************************************************************)
 (*                                                                       *)
 (* MAIN AIR VALVE, HOUR METER                                            *)
 (*                                                                       *)
 (*************************************************************************)

Step 2                                                                    << RUNG 48  STEP #0228 >>
STEP_2                                                          Y100
%M0102                                                         %Q0005
──┤ ├──────────────────────────────────────────────────────────( )──  (* Main air valve                    *)
 0030                                                                    Cross reference for Y100
                                                                         -] [- 222
                                                                         -]/[- 224

Main                                                                      << RUNG 49  STEP #0230 >>
motor
speed 2
G002_S1                                                         P001
%Q0019                                                         %Q0032
──┤ ├──────────────────────────────────────────────────────────( )──  (* Hour meter                        *)
 0087                                                                    Cross reference for P001
                                                                                  NONE
Start
belt
brake
G005_SF
%Q0021
──┤ ├──
 0134
```

EM1.1TH900627en.fm

```
06-16-03  10:35                    GE FANUC SERIES 90-30/90-20/MICRO (v9.02)                    Page    12
                                          Tetra Cap Applicator 47 -0100
                                   48463-0001 ELD 001 AD 030612 JNT ECM:135545

 (*************************************************************************)
 (*                                                                       *)
 (* CHOICE CAP - NO CAP                                                   *)
 (*                                                                       *)
 (*************************************************************************)

Choice                                                                    << RUNG 51  STEP #0234 >>
cap-
no cap  Step 0  Step 2
 S07H   STEP_0  STEP_2
%I0009  %M0100  %M0102                                   %T0010
──┤ ├────┤ ├────┤/├──┌──────┐──────────────────────────(^)──  (* Choice Cap   no Cap              *)
          0022    0030 │ TMR  │                                 Cross reference for %T0010
                       │0.10s │                                 -] [- 52
                CONST ─│PV    │                                 -]/[- 52
                +00010 │      │
                       └──────┘

                       Choice
                       Cap
                       no Cap

                       %R0233

Choice                                                                    << RUNG 52  STEP #0239 >>
Cap     With
no Cap  Cap

%T0010  %M0210                                           %M0210
──┤ ├────┤/├──┬──────────────────────────────────────────(M)──  (* With Cap                         *)
 0051    0052  │                                                 Cross reference for %M0210
               │                                                 -] [- 26,52,53,66,78,80,92,94,102,109,123,129,134,
Choice         │                                                      138,144,159,177,185,253,255,271,272,278,285,
Cap     With   │                                                      292,296,297,330,338,339,346
no Cap  Cap    │                                                 -]/[- 32,41,52,54,66,67,80,120,125,134,254,346
               │
%T0010  %M0210 │
──┤/├────┤ ├──┘
 0051    0052

With                                                                      << RUNG 53  STEP #0245 >>
Cap     Step 0
        STEP_0                                            H021
%M0210  %M0100                                           %M0137
──┤ ├────┤ ├──────────────────────────────────────────( )──  (* Cap  LED                          *)
 0052    0022                                                    Cross reference for H021
                                                                 FBIO  (369)

With                                                                      << RUNG 54  STEP #0248 >>
Cap     Step 0
        STEP_0                                            H022
%M0210  %M0100                                           %M0138
──┤/├────┤ ├──────────────────────────────────────────( )──  (* No Cap  LED                       *)
 0052    0022                                                    Cross reference for H022
                                                                 FBIO  (369)
```

EM1.1TH900627en.fm

```
06-16-03  10:35                    GE FANUC SERIES 90-30/90-20/MICRO (v9.02)                    Page    13
                                        Tetra Cap Applicator 47 -0100
                                   48463-0001 ELD 001 AD 030612 JNT ECM:135545

 (*****************************************************************************)
 (*                                                                           *)
 (* REDUCED SPEED                                                             *)
 (*                                                                           *)
 (*****************************************************************************)

Switch  Low                                                                    << RUNG 56  STEP #0252 >>
in      speed
right   right
line    line
 B916    B918
%I0059  %I0061                                                   %M0220
 ─┤ ├────┤ ├──┌TMR┐──────┌OFDT┐──────────────────────────────( )──  (* Low speed right line            *)
            0.10s        0.10s                                        Cross reference for %M0220
                                                                      -] [- 61,62,66,67
         CONST ─PV     CONST ─PV                                      -]/[- 59,66,67
         +00005        +00050
                 Low           Low
                 speed         speed
                 right         right
                 line          line

                 %R0536        %R0539

Switch  Low                                                                    << RUNG 57  STEP #0257 >>
in      speed
right   left
line    line
 B916    B906
%I0059  %I0062                                                   %M0221
 ─┤/├───┤ ├──┌TMR┐──────┌OFDT┐──────────────────────────────( )──  (* Low speed left line             *)
            0.10s        0.10s                                        Cross reference for %M0221
                                                                      -] [- 64,65,66,67
         CONST ─PV     CONST ─PV                                      -]/[- 59,66,67
         +00010        +00050
                 Low           Low
                 speed         speed
                 left          left
                 line          line

                 %R0530        %R0533

 >>>>>>>>>>>>>>>>>>>>>>>>>>>>>>>>>>>>>>>>>>>>>>>>>>>>>>>>>>>>>>>>>>>>>>>>>>>>
 >> this is used when constant 2 is set to 1 in the adaptation table         >>
 >>>>>>>>>>>>>>>>>>>>>>>>>>>>>>>>>>>>>>>>>>>>>>>>>>>>>>>>>>>>>>>>>>>>>>>>>>>>

        Low     Low                                                            << RUNG 59  STEP #0263 >>
Contin  speed   speed
low     right   left
speed   line    line

%M0782  %M0220  %M0221
 ─┤ ├────┤/├────┤/├──┌MOVE_┐─
          0056    0057  INT

                        Reduced
                        speed

                CONST ─IN   Q─%R0770
                +00003  LEN
                        00001

 >>>>>>>>>>>>>>>>>>>>>>>>>>>>>>>>>>>>>>>>>>>>>>>>>>>>>>>>>>>>>>>>>>>>>>>>>>>>
 >> the const depending of layout on right line.                            >>
 >>>>>>>>>>>>>>>>>>>>>>>>>>>>>>>>>>>>>>>>>>>>>>>>>>>>>>>>>>>>>>>>>>>>>>>>>>>>

Low                                                                            << RUNG 61  STEP #0268 >>
speed   Contin
right   low
line    speed

%M0220  %M0782
 ─┤ ├────┤ ├──┌MOVE_┐─
  0056          INT
   │
   │                    Reduced
FST_SCN                 speed
%S0001
 ─┤ ├──┘ CONST ─IN   Q─%R0770
          +00002  LEN
                  00001
```

EM1.1TH900627en.fm

```
06-16-03  10:35                    GE FANUC SERIES 90-30/90-20/MICRO (v9.02)                    Page    14
                                        Tetra Cap Applicator 47 -0100
                                  48463-0001 ELD 001 AD 030612 JNT ECM:135545

Low                                                                                << RUNG 62  STEP #0272 >>
speed   Contin
right   low
line    speed

%M0220  %M0782
 0056                  MOVE_
                        INT

                                Reduced
                                speed
FST_SCN
%S0001
        CONST          IN  Q   %R0770
        +00003          LEN
                       00001

 >>>>
```

```
06-16-03  10:35                    GE FANUC SERIES 90-30/90-20/MICRO (v9.02)                    Page    15
                                        Tetra Cap Applicator 47 -0100
                                   48463-0001 ELD 001 AD 030612 JNT ECM:135545

                                                                                << RUNG 66  STEP #0283 >>
                 Low     Package
                 speed   at belt
         With    right   brake
Step 2   Cap     line    disch
STEP_2                   B104__
%M0102   %M0210  %M0220  %T0060                                   %M0214
 0030     0052    0056    0172          >UPCTR                    ( )   (* Reduced speed without cap        *)
                 Low                                                     Cross reference for %M0214
                 speed                                                   -] [- 66,134
                 left                                                    -]/[- 120
                 line
                 %M0221
                  0057                   R
                 Contin
                 low
                 speed                  Reduced
                                        speed
                 %M0782                 %R0770  PV
Reduced  Reduced
speed    speed
without  no      Start                  Reduced
cap      package pusher                 speed
                 AV_5_                  without
%M0214   %M0215  %T0058                 cap
 0066     0067    0174                  %R0524
With
Cap
%M0210
 0052
Low      Low
speed    speed   Contin
right    left    low
line     line    speed
%M0220   %M0221  %M0782
 0056     0057
                 Step 3
                 STEP_3
                 %M0103
                  0034
```

EM1.1TH900627en.fm

Program: D484631 C:\LM90\TCAP47\D484631 Block: _MAIN

```
06-16-03  10:35                    GE FANUC SERIES 90-30/90-20/MICRO (v9.02)                    Page    16
                                        Tetra Cap Applicator 47 -0100
                                 48463-0001 ELD 001 AD 030612 JNT ECM:135545

                                                                                << RUNG 67  STEP #0302 >>
          Low      Package
          speed    at belt
          right    brake
Step 2    line     disch
STEP_2             B104__
%M0102   %M0220   %T0060                                          %M0215
 0030     0056     0172          >UPCTR                            ( )--  (* Reduced speed no package          *)
                                                                          Cross reference for %M0215
                                                                          -] [- 67
                                                                          -]/[- 66,179
          Low
          speed
          left
          line

          %M0221
           0057                   R

          Contin
          low
          speed
                                 Reduced
                                 speed
          %M0782
                                 %R0770  PV

Reduced
speed
no        Start
package   pusher
           AV_5_
%M0215   %T0058                   Reduced
 0067     0174                    speed
                                  no
                                  package
With                              %R0507
Cap

%M0210
 0052
Low      Low      Contin
speed    speed    low
right    left     speed
line     line

%M0220   %M0221   %M0782
 0056     0057

                  Step 3
                  STEP_3
                  %M0103
                   0034
```

```
06-16-03  10:35                    GE FANUC SERIES 90-30/90-20/MICRO (v9.02)                    Page    17
                                        Tetra Cap Applicator 47 -0100
                                   48463-0001 ELD 001 AD 030612 JNT ECM:135545

 (*****************************************************************************)
 (*                                                                           *)
 (* INFEED CONV, MAIN MOTOR, DOORS, CAP CONV                                  *)
 (*                                                                           *)
 (*****************************************************************************)

                                                Alarm                          << RUNG 69  STEP #0320 >>
Step 2                                          Em stop
STEP_2
%M0102                                          %M0030                  %M0217
 ─┤ ├──────────────────────────────────────────┤/├──────────────────────( )─  (* Infeed conv aux.mem              *)
  0030                                           0214                           Cross reference for %M0217
                                                                                -] [- 69,71
Infeed                  Door
conv                    applica Motor
aux.mem                 tor     prot    Step 1
                          L13   MOTORS  STEP_1
%M0217                  %I0013  %I0003  %M0101
 ─┤ ├──────────────────┤ ├─────┤ ├─────┤ ├─┘
  0069                                    0028

                Ready
Pulse   Outfeed to Step
Step up jammed  up
 S01H_   B121
%T0003  %I0033  %M0004
 ─┤ ├────┤ ├────┤ ├─┘
  0017          0024

        Detect
        of
        package
         B181
        %I0035
        ─┤ ├─

Start   Package Ext     Ext                                            << RUNG 70  STEP #0334 >>
conv    to      hose    hose            Main
from up infeed  brake   brake   Lower   motor   Pulse
stream  conv    sensor1 sensor2 infeed  speed 2 Step up
X090_5   B925    B901    B902    B903   G002_S1  S01H_
%I0052  %I0028  %I0015  %I0016  %I0025  %Q0019  %T0003                 %M0223
 ─┤/├────┤/├────┤/├────┤/├────┤/├────┤/├────┤/├──┌──────┐──────────( )─  (* Machine stoped,stop conv         *)
                                          0087    0017  │ TMR  │          Cross reference for %M0223
                                                        │0.10s │          -]/[- 71
Ready                                                   │      │
signal                                                  │      │
 K099                                                   │      │
%Q0040                                                  │      │
 ─┤/├──────────────────────────────────────────────────┤      │
  0187                                          CONST ─┤PV    │
                                                +00300  │      │
                                                        └──────┘
                                                Machine
                                                stoped,
                                                stop
                                                conv

                                                %R0218

        Machine                                                        << RUNG 71  STEP #0344 >>
Infeed  stoped,
conv    stop
aux.mem conv
                                                                       K001
%M0217  %M0223                                                         %Q0017
 ─┤ ├────┤/├──────────────────────────────────────────────────────────( )─  (* Infeed conv                       *)
  0069    0070                                                                 Cross reference for K001
                                                                               -] [- 109,114,123,188,256,257,265,292
                                                                               -]/[- 43,133
```

EM1.1TH900627en.fm

```
06-16-03  10:35                    GE FANUC SERIES 90-30/90-20/MICRO (v9.02)                    Page    18
                                        Tetra Cap Applicator 47 -0100
                                   48463-0001 ELD 001 AD 030612 JNT ECM:135545

Ext                     Package                                                << RUNG 72  STEP #0347 >>
hose                    to
brake           Lower   infeed  Pulse
sensor1         infeed  conv    Step up
 B901   ALW_ON   B903    B925    S01H_
%I0015  %S0007  %I0025  %I0028  %T0003                          %M0235
──┤/├────┤ ├────┤/├────┤/├────┤/├──┌TMR┐──────────────────────( )──  (* No package at infeed            *)
                                 0017 │0.10s│                          Cross reference for %M0235
                                      │     │                          -] [- 73,116,131
                Upper                 │     │                          -]/[- 102,109
                infeed                │     │
                 B904                 │     │
                %I0026                │     │
                  ┌──┤/├──┐          │     │
                                      CONST─┤PV│
                                      +00055└───┘
Alarm                                 No
fallen                                package
package                               at
                                      infeed
%M0820                                %R0203
──┤ ├──────────────────────────┤
 0244
AlarmNo
package
to
infeed

%M0821
──┤ ├──────────────────────────┤
 0258

No                                                                     << RUNG 73  STEP #0358 >>
package
at
infeed

%M0235                                                         %M0240
──┤ ├────┌TMR┐──────────────────────────────────────────────( )──  (* No package at infeed            *)
 0072    │0.10s│                                                      Cross reference for %M0240
         │     │                                                      -] [- 78
 CONST─┤PV│
 +00100└───┘
         No
         package
         at
         infeed

         %R0366

Carrier                                                                << RUNG 74  STEP #0361 >>
chain
stop
pos
 AV_2
%M0201                                                         %T0017
──┤ ├──────────────────────────────────────────────────────(^)──  (* Carrier chain synch stop         *)
                                                                       Cross reference for %T0017
                                                                       -]/[- 81,90

                        Alarm   Cap on  Alarm                          << RUNG 75  STEP #0363 >>
Hotmelt Alarm   Alarm   queue   carrier missing
unit    fallen  queue   outfeed before  Cap on
ready   package outfeed LED     index   package
                         H015
%I0044  %M0037  %M0038  %M0133  %M0270  %M0816
──┤ ├────┤/├────┤/├────┤/├────┤/├────┤/├──────────────────────<+>
         0246    0251    0252    0316

         Delay           AlarmNo                                       << RUNG 76  STEP #0370 >>
         stop    Alarm   package
         main    pre     to
         motor   heater  infeed

         %M0837  %M0921  %M0821                                 %M0243
<+>──────┤/├────┤/├────┤/├──────────────────────────────────( )──  (* Main motor run cond              *)
          0036    0338    0258                                         Cross reference for %M0243
                                                                       -]/[- 78

Program: D484631                    C:\LM90\TCAP47\D484631                                  Block: _MAIN
```

EM1.1TH900627en.fm

```
06-16-03  10:35                    GE FANUC SERIES 90-30/90-20/MICRO (v9.02)                    Page    19
                                        Tetra Cap Applicator 47 -0100
                                   48463-0001 ELD 001 AD 030612 JNT ECM:135545

                Alarm                                                          << RUNG 77  STEP #0375 >>
                queue
Step 2          outfeed
STEP_2
%M0102          %M0038                                          %M0242
 0030            0251            TMR                            ( )    (* Stop main motor                  *)
                Alarm           0.10s                                  Cross reference for %M0242
                queue                                                  -] [- 78
                outfeed
                LED
                 H015
                %M0133
                 0252     CONST  PV
                AlarmNo   +00100
                package
                to                Stop
                infeed            main
                                  motor
                %M0821
                 0258             %R0363
                Run
                enable
                %M0500
                 0189

Been in                           No caps                              << RUNG 78  STEP #0383 >>
Step 3          Stop              or pack
not             main              in
below 2         motor             chain

%M0107          %M0242            %M0315                         %M0245
 0025            0077             0128                           ( )    (* Main motor stop cond            *)
                Package No                                             Cross reference for %M0245
                at belt package                                        -] [- 80
                brake   at
                disch   infeed
                 B104
                %I0027  %M0240
                         0073
                        Cap
                With    conv no
                Cap     queue
                %M0210  %M0610
                 0052    0171
                        Main     No caps
                        motor    before
                With    run      station
                Cap     cond     9
                %M0210  %M0243   %M0310
                 0052    0076     0127

Start                                                                  << RUNG 79  STEP #0398 >>
belt
brake
G005_SF
%Q0021                                                         %M0247
 0134            TMR                                           ( )    (* Stop M.motor after beltb          *)
                 0.10s                                                 Cross reference for %M0247
                                                                       -] [- 80
 CONST  PV
 +00010

                Stop
                M.motor
                after
                beltb
                %R0230
```

EM1.1TH900627en.fm

```
06-16-03  10:35                    GE FANUC SERIES 90-30/90-20/MICRO (v9.02)                    Page    20
                                        Tetra Cap Applicator 47 -0100
                                   48463-0001 ELD 001 AD 030612 JNT ECM:135545

                                                                                << RUNG 80  STEP #0401 >>
                Stop
Alarm           M.motor
fallen  With    after
package Cap     beltb

%M0037  %M0210  %M0247                                          %M0250
──┤ ├────┤/├────┤ ├──────────────────────────────────────────────( )──  (* Main motor stop cond            *)
 0246    0052    0079                                                   Cross reference for %M0250
Main                                                                    -] [- 80
motor                                                                   -]/[- 81
stop
cond

%M0245
──┤ ├──────────────────
 0078
                No caps
                or pack
                in      With
Step 3  Step 2  chain   Cap
STEP_3  STEP_2
%M0103  %M0102  %M0315  %M0210
──┤/├────┤ ├────┤ ├────┤ ├──────────
 0034    0030    0128    0052
                                Stop
                                M.motor
                        With    after
                        Cap     beltb

                        %M0210  %M0247
                        ──┤/├────┤ ├──
                         0052    0079
        Main
        motor
        stop
        cond

        %M0250
        ──┤ ├──────────────────────
         0080

Step 1  Step 2
STEP_1  STEP_2
%M0101  %M0102
──┤ ├────┤/├──────────────────────
 0028    0030

Main    Delay                           Cap on                                  << RUNG 81  STEP #0420 >>
motor   stop            Alarm   Alarm   carrier Alarm   Alarm   Index
stop    main            jammed  lead    before  air     cap     out of
cond    motor           outfeed rail    index   press   pusher  pos.

%M0250  %M0837          %M0875  %M0920  %M0270  %M0033  %M0915  %M0615
──┤/├────┤/├────────────┤/├────┤/├────┤/├────┤/├────┤/├────┤/├──────<+>
 0080    0036            0266    0312    0316    0226    0298    0175

Step 2  Step 3  Inching
STEP_2  STEP_3   S05H
%M0102  %M0103  %I0008
──┤ ├────┤/├────┤ ├──┐
 0030    0034
Wrong                   Door
stopPos         Door    applica
main            applica tor     Motor
motor           tor     circuit prot
                 L13            MOTORS
%M0268          %I0013  %I0014  %I0003
──┤ ├──────────┤ ├────┤ ├────┤ ├──────────────────────────────────────
 0090
        Carrier
Cond    chain
main    synch
motor   stop

%M0265  %T0017
──┤ ├────┤/├──┘
 0082    0074

        Freque.                                                         << RUNG 82  STEP #0441 >>
        convert
        appli-
        cator   Step 2
         K002   STEP_2
        %Q0018  %M0102                                          %M0265
──<+>────┤ ├────┤ ├──────────────────────────────────────────────( )──  (* Cond main motor                 *)
         0088    0030                                                   Cross reference for %M0265
                                                                        -] [- 81,86,87,285
                                                                        -]/[- 38

Program: D484631                    C:\LM90\TCAP47\D484631                                  Block: _MAIN
```

EM1.1TH900627en.fm

```
06-16-03  10:35                    GE FANUC SERIES 90-30/90-20/MICRO (v9.02)                    Page    21
                                        Tetra Cap Applicator 47 -0100
                                   48463-0001 ELD 001 AD 030612 JNT ECM:135545

                 Alarm                                                    << RUNG 83  STEP #0445 >>
Delay            clutch
off              main
inching Inching  motor
         S05H
%M0260  %I0008  %M0041                                  %M0261
──┤ ├──────┤ ├──────┤/├──────────────────────────────────────( )──  (* Inching                          *)
 0084           0242                                                  Cross reference for %M0261
                                                                      -] [- 83,85
Inching
%M0261
──┤ ├──
 0083

Inching                                                               << RUNG 84  STEP #0450 >>
 S05H
%I0008                                                  %M0260
──┤/├──┌──────┐──────────────────────────────────────────────( )──  (* Delay off inching                 *)
       │ TMR  │                                                      Cross reference for %M0260
       │0.10s │                                                      -] [- 83
 CONST─│PV    │
 +00001└──────┘

        Delay
        off
        inching

        %R0360

                                   Cap on                 Freque.     << RUNG 85  STEP #0453 >>
                        Alarm   Alarm   carrier Alarm   Alarm   convert
                        jammed  lead    before  air     cap     appli-
Step 1  Step 2  Inching outfeed rail    index   press   pusher  cator
STEP_1  STEP_2                                                   K002
%M0101  %M0102  %M0261  %M0875  %M0920  %M0270  %M0033  %M0915  %Q0018  %M0266
──┤ ├──────┤/├──────┤ ├──────┤/├──────┤/├──────┤/├──────┤/├──────┤ ├──────( )──  (* Inching main motor            *)
 0028    0030    0083    0266    0312    0316    0226    0298    0088            Cross reference for %M0266
                                                                                -] [- 86

Cond                                                                  << RUNG 86  STEP #0463 >>
main
motor
                                                        G002_SF
%M0265                                                  %Q0023
──┤ ├──────────────────────────────────────────────────────────( )──  (* Start main motor speed 1         *)
 0082                                                                  Cross reference for G002_SF
                                                                      -] [- 91,92
Inching
main
motor
%M0266
──┤ ├──
 0085

Cond                                                                  << RUNG 87  STEP #0466 >>
main
motor
                                                        G002_S1
%M0265                                                  %Q0019
──┤ ├──────────────────────────────────────────────────────────( )──  (* Main motor speed 2               *)
 0082                                                                  Cross reference for G002_S1
                                                                      -] [- 49,102,144,187,296,297
                                                                      -]/[- 45,70,90,97,103,118

        Door                                                          << RUNG 88  STEP #0468 >>
        applica
Step 1  tor
STEP_1    L13                                            K002
%M0101  %I0013                                          %Q0018
──┤ ├──────┤ ├──────────────────────────────────────────────( )──  (* Freque. convert appli- cator     *)
 0028                                                                  Cross reference for K002
                                                                      -] [- 82,85,122,175,236
                                                                      -]/[- 236

        Doors                                                         << RUNG 89  STEP #0471 >>
        in-
Step 1  feeder
STEP_1    L14                                            K003
%M0101  %I0031                                          %Q0012
──┤ ├──────┤ ├──────────────────────────────────────────────( )──  (* Freque. convert in- feeder       *)
 0028                                                                  Cross reference for K003
                                                                      -] [- 237
                                                                      -]/[- 237

Program: D484631                   C:\LM90\TCAP47\D484631                                   Block: _MAIN
```

EM1.1TH900627en.fm

```
06-16-03  10:35                    GE FANUC SERIES 90-30/90-20/MICRO (v9.02)                    Page    22
                                        Tetra Cap Applicator 47 -0100
                                 48463-0001 ELD 001 AD 030612 JNT ECM:135545

Carrier                                                                    << RUNG 90  STEP #0474 >>
chain
synch     Lock     Main
stop      doors    motor
          B135_1   speed 2
          G002_S1
%T0017    %Q0036   %Q0019                                   %M0268
──┤/├────┤ ├──────┤/├──────────────────────────────────────( )──  (* Wrong stopPos main motor          *)
 0074      0091     0087                                            Cross reference for %M0268
                                                                    -] [- 81,90
Alarm
angle
encoder

%M0710
──┤ ├──────────┐
                │
Wrong           │
stopPos         │
main            │
motor           │
                │
%M0268          │
──┤ ├──────────┘
 0090

Start                                                              << RUNG 91  STEP #0480 >>
main
motor
speed 1
G002_SF                                                   B135_1
%Q0023                                                    %Q0036
──┤ ├──────────────────────────────────────────────────────( )──  (* Lock doors                         *)
 0086                                                               Cross reference for B135_1
                                                                    -] [- 90
                                                          B134_1
                                                          %Q0037
                                                          ( )──  (* Lock tunnel                        *)
                                                                    Cross reference for B134_1
                                                                              NONE

                                                                   << RUNG 92  STEP #0483 >>
                Start                          Low     Empty-
                main                           level   ing
        With    motor                          paddle  In-
        Cap     speed 1 Step 3                 elevat  feeder
Step 2                  STEP_3                                      K022
STEP_2          G002_SF                                             %Q0022
%M0102  %M0210  %Q0023  %M0103                 %M0887  %M0540
──┤ ├────┤ ├────┤ ├────┤ ├──────────────────────┤/├────┤/├──┌──────┐──( )──  (* Cap conv                        *)
 0030    0052    0086    0034                   0272    0152  │OFDT  │                                  Cross reference for K022
                Cap                   Alarm                  │0.10s │                                  -] [- 160,185
                conv    Alarm         no cap                 │      │
                max     no cap        queue                  │      │
                queue   queue         LED     Step 3         │      │
                                       H034   STEP_3         │      │
                %M0525  %M0058        %M0162  %M0103         │      │
                ──┤/├────┤/├────┤/├────┤/├──┘        CONST ─│PV    │
                 0147    0333    0334    0034                 +00020 │
                Cap                                                  │
                conv                                                 │
                min                                                  │
                queue                                                │
                 B197                                                │
                %I0047                                               │
                ──┤/├──┘                                             │
                                                                     Delay
                                                                     off
                                                                     cap
                                                                     conv

                                                                     %R0357
```

EM1.1TH900627en.fm

```
06-16-03  10:35                    GE FANUC SERIES 90-30/90-20/MICRO (v9.02)                    Page    23
                                        Tetra Cap Applicator 47 -0100
                                   48463-0001 ELD 001 AD 030612 JNT ECM:135545

 (*****************************************************************************)
 (*                                                                           *)
 (* HOT MELT UNIT, PREHEATING NOZZLE                                          *)
 (*                                                                           *)
 (*****************************************************************************)

        With                                                                << RUNG 94  STEP #0500 >>
Step 1  Cap
STEP_1                                                          K006
%M0101  %M0210                                                 %Q0033
──┤ ├────┤ ├──────────────────────────────────────────────────────( )──  (* Hotmelt unit                    *)
 0028    0052                                                           Cross reference for K006
                                                                                NONE

Preheat                                                             << RUNG 95  STEP #0503 >>
pulse

%M0781
──┤/├──────────────────────────────────────────────────────N──>> STDPREH

 >>>>
```

```
06-16-03  10:35                    GE FANUC SERIES 90-30/90-20/MICRO (v9.02)                    Page    24
                                        Tetra Cap Applicator 47 -0100
                                  48463-0001 ELD 001 AD 030612 JNT ECM:135545

Inching                                                                    << RUNG 100  STEP #0516 >>
 S05H
%I0008                                                          %M0277
Ā──┤/├──────────────────────────────────────────────────────────( )──  (* Aux.mem preheat element nozzle   *)
                                                                           Cross reference for %M0277
Step 2                                                                     -]/[- 101
STEP_2
%M0102
Ā──┤/├──┐
 0030    │
         │
Step 3   │
STEP_3   │
%M0103   │
Ā──┤ ├──┘
 0034

Aux.mem                                                                    << RUNG 101  STEP #0520 >>
preheat
element
nozzle

%M0277                                                          %M0278
Ā──┤/├──┌──────┐──────────────────────────────────────────────( )──  (* Delay preheat element nozzle     *)
 0100    │OFDT  │                                                          Cross reference for %M0278
         │0.10s │                                                          -] [- 103
 CONST ──┤PV    │                                                          -]/[- 102
 +00005  └──────┘
         Delay
         preheat
         element
         nozzle

         %R0259

No                                Delay                                    << RUNG 102  STEP #0523 >>
package          Main             preheat
at      With     motor            element
infeed  Cap      speed 2          nozzle
         G002_S1
%M0235  %M0210  %Q0019           %M0278                         %M0279
Ā──┤/├──┬──┤ ├──┬──┤ ├──────────┬──┤/├──────────────────────( )──  (* Preheat nozzle element aux.mem   *)
 0072    │ 0052  │  0087        │                                       Cross reference for %M0279
         │       │ Pulsing      │                                       -] [- 103
         │       │ preheat      │                                       -]/[- 103
Auto     │       │ element      │
empty    │       │ on           │
%M0295   │       │ %M0275  %M0276 │                             %M0280
Ā──┤ ├──┘       └──┤ ├──┬──┤/├──┘──────────────────────────( )──  (* Fan preheat nozzle aux.mem       *)
 0116               0097    0099                                          Cross reference for %M0280
                   Pulsing Pulsing                                       -] [- 105
                   preheat preheat
         With      element element
         Cap       on      off
Step 2
STEP_2
%M0102  %M0210  %M0275  %M0276
Ā──┤ ├──┬──┤ ├──┬──┤ ├──┬──┤/├──┘
 0030    │ 0052  │  0097    0099
         │       │
         │       │

Preheat                                                                    << RUNG 103  STEP #0539 >>
nozzle
element
aux.mem

%M0279                                                          %M0281
Ā──┤ ├──┬──────────────────────────┌──────┐──────────────────( )──  (* Preheat nozzle element           *)
 0102    │                          │ONDTR │                            Cross reference for %M0281
         │                          │0.10s │                            -] [- 104
         │ Preheat                  │      │
Main     │ nozzle                   │      │
motor    │ element                  │      │
speed 2  │ aux.mem                  │      │
G002_S1  │                          │      │
%Q0019   │ %M0279                   │      │
Ā──┤/├──┬──┤/├──┬──────────────────┤R     │
 0087    │  0102  │                 │      │
Delay    │        │                 │      │
preheat  │        │                 │      │
element  │        │                 │      │
nozzle   │ Step 2 │ Step 3          │      │
         │ STEP_2 │ STEP_3          │      │
%M0278   │ %M0102 │ %M0103          │      │
Ā──┤ ├──┬──┤ ├──┬──┤/├──┬──────────┤PV    │
 0101    │  0030  │  0034  │ CONST ──┤      │
         │        │        │ +00010  └──────┘
         │        │        │
         │        │        │
         │        │        │
```

```
06-16-03  10:35                    GE FANUC SERIES 90-30/90-20/MICRO (v9.02)                    Page    25
                                        Tetra Cap Applicator 47 -0100
                                   48463-0001 ELD 001 AD 030612 JNT ECM:135545

Preheat Fan                                                                  << RUNG 104  STEP #0548 >>
nozzle  preheat
element nozzle
         K010                                                   K004
%M0281  %Q0034                                                  %Q0020
Ã──┤ ├────┤ ├──────────────────────────────────────────────────( )──  (* Preheat nozzle element          *)
 0103    0110                                                           Cross reference for K004
                                                                        -] [- 110,176,338
                                                                        -( )  109

Fan                                                                          << RUNG 105  STEP #0551 >>
preheat
nozzle
aux.mem
                                                                        K010
%M0280                                                                  %Q0034
Ã──┤ ├──┌──────┐──────────────────────────────────────────────────( )──  (* Fan preheat nozzle              *)
 0102   │OFDT  │                                                        Cross reference for K010
        │0.10s │                                                        -] [- 104
 CONST ─│PV    │                                                        -( )  110
 +00300 └──────┘
        Delay
        power
        off pre
        heatFan

        %R0434

├STDPREH:(nested)                                                            << RUNG 106  STEP #0554 >>

Preheat                                                                      << RUNG 107  STEP #0555 >>
pulse

%M0781
──┤ ├──────────────────────────────────────────────────────N──>>  PREH

 >>>>
```

```
06-16-03  10:35                    GE FANUC SERIES 90-30/90-20/MICRO (v9.02)                    Page    26
                                        Tetra Cap Applicator 47 -0100
                                   48463-0001 ELD 001 AD 030612 JNT ECM:135545

 (*************************************************************************)
 (*                                                                       *)
 (* INFEED TIMING, BELT BRAKE                                             *)
 (*                                                                       *)
 (*************************************************************************)

        Lower                                                          << RUNG 113  STEP #0568 >>
Step 2  infeed
STEP_2   B903
%M0102  %I0025                                                  %M0282
──┤ ├────┤/├──┌──────┐──────────────────────────────────────────( )──  (* Infeed lower off                  *)
 0030           │ TMR  │                                                Cross reference for %M0282
                │0.10s │                                                -]/[- 114
         CONST ─│ PV   │
         +00000 └──────┘

                Infeed
                lower
                off

                %R0127

Infeed  Lower                                                          << RUNG 114  STEP #0572 >>
conv    infeed
 K001    B903
%Q0017  %I0025                                                  %M0285
──┤ ├────┤ ├──────────┌──────┐──────────────────────────────────( )──  (* Queue infeed time                  *)
 0071   │            │ TMR  │                                            Cross reference for %M0285
        │            │0.10s │                                            -] [- 119,173,177
        │Infeed      │      │                                            -]/[- 173
        │lower       │      │
        │off         │      │
        │%M0282      │      │
        └────┤/├─────┘ CONST ─│ PV   │
         0113          +00010 └──────┘

                       Queue
                       infeed
                       time

                       %R0209

        Package        No pack                                         << RUNG 115  STEP #0578 >>
Lower   at belt        stop
infeed  brake          belt
 B903    B104   Step 0  brake
%I0025  %I0027  %M0100  %T0050                                  %M0290
──┤ ├────┤/├────┤ ├────┤/├──────────────────────────────────────( )──  (* Package at lower infeed           *)
                 0022    0131                                           Cross reference for %M0290
Package                                                                 -] [- 115,116
at
lower
infeed

%M0290
──┤ ├──┘
 0115

Package No              Last                                           << RUNG 116  STEP #0584 >>
at belt package         pack
brake   at      Lower   left
disch   infeed  infeed  machine
 B104            B903
%I0027  %M0235  %I0025  %T0040                                  %M0295
──┤ ├────┤ ├────┤/├────┤/├──────────────────────────────────────( )──  (* Auto empty                        *)
         0072           0129                                           Cross reference for %M0295
Package                                                                 -] [- 102,109,116,120,122,173,177
at
lower
infeed

%M0290
──┤ ├──┘
 0115
        No pack
        stop
Auto    belt
empty   brake

%M0295  %T0050
──┤ ├────┤/├──┘
 0116    0131

Program: D484631                   C:\LM90\TCAP47\D484631                                   Block: _MAIN
```

EM1.1TH900627en.fm

```
06-16-03  10:35                    GE FANUC SERIES 90-30/90-20/MICRO (v9.02)                    Page    27
                                        Tetra Cap Applicator 47 -0100
                                   48463-0001 ELD 001 AD 030612 JNT ECM:135545

Synch                                                                   << RUNG 117  STEP #0593 >>
pos
infeed
 AV_1
%M0200                                                   %T0030
──┤ ├──────────────────────────────────────────────────────(^)──  (* Infeed synch signal              *)
                                                                    Cross reference for %T0030
                                                                    -] [- 122

        Main                                                        << RUNG 118  STEP #0595 >>
        motor
Step 3  speed 2
STEP_3  G002_S1
%M0103  %Q0019                                           %M0300
──┤/├───┤/├──────────────────────────────────────────────( )──  (* Not allowed to run beltbr        *)
 0034    0087                                                       Cross reference for %M0300
Not     No caps                                                     -] [- 118
allowed before                                                      -]/[- 122
to run  station
beltbr  5

%M0300  %M0305
──┤ ├───┤/├──
 0118    0126

Queue                                                               << RUNG 119  STEP #0601 >>
infeed
time

%M0285                                                   %M0301
──┤ ├──┌──────┐──────────────────────────────────────────( )──  (* Queue infeed time               *)
 0114   │OFDT  │                                                   Cross reference for %M0301
        │0.10s │                                                   -] [- 120,122
 CONST ─│PV    │
 +00020 └──────┘

        Queue
        infeed
        time

        %R0425

        Been in                                                     << RUNG 120  STEP #0604 >>
Queue   Step 3  Alarm          Alarm   Alarm   Reduced Alarm
infeed  not     fallen  With   fallen  queue   speed   queue   Cap in
time    below 2 package Cap    package outfeed without cap     carrier
                                                        cap     chain
%M0301  %M0107  %M0037  %M0210 %M0820  %M0825  %M0214  %M0824  %M0960
──┤ ├───┤ ├───┤/├────┤/├────┤/├────┤/├────┤/├────┤/├────┤/├──────<+>
 0119    0025    0246    0052   0244    0249    0066    0292
│
│Auto
│empty
│
│%M0295
└──┤ ├──
   0116

        Run                                                         << RUNG 121  STEP #0615 >>
        enable

        %M0500                                           %M0302
<+>─────┤ ├──────────────────────────────────────────────( )──  (* Start belt brake                 *)
         0189                                                       Cross reference for %M0302
                                                                    -] [- 122

Program: D484631                    C:\LM90\TCAP47\D484631                                  Block: _MAIN
```

EM1.1TH900627en.fm

```
06-16-03  10:35                    GE FANUC SERIES 90-30/90-20/MICRO (v9.02)                    Page    28
                                          Tetra Cap Applicator 47 -0100
                                   48463-0001 ELD 001 AD 030612 JNT ECM:135545

Not      Cap in  Package                  Freque.                                << RUNG 122  STEP #0618 >>
allowed  carrier at belt  Infeed          convert
to run   chain   brake    synch           appli-
beltbr   pos 5   disch    signal          cator
          CAP_5   B104                     K002
%M0300   %M0405  %I0027   %T0030          %Q0018
──┤/├────┤ ├────┤ ├──────┤ ├──────────────┤ ├──────────────────────────────<+>
 0118     0125            0117             0088

Start
belt
brake

%M0302
──┤ ├──────────┘
 0121
                 Package
                 at belt Alarm   Alarm
         Pulse   brake   fallen  fallen
Step 3   Step up disch   package package
STEP_3    S01H_   B104
%M0103   %T0003  %I0027  %M0037  %M0820
──┤ ├────┤ ├────┤/├────┤/├────┤/├──┘
 0034     0017            0246    0244

Queue
infeed
time

%M0301
──┤ ├──────────┘
 0119

Auto
empty

%M0295
──┤ ├──────────┘
 0116

         Infeed  Inching                                                << RUNG 123  STEP #0633 >>
         conv    machine Step 3
          K001           STEP_3                                  G005_SF
         %Q0017  %M0109  %M0103                                   %Q0021
<+>──────┤ ├────┤/├────┬──┤ ├──────────────────────────────────────(S)──  (* Start belt brake                  *)
          0071    0026  │ 0034                                            Cross reference for G005_SF
                        │                                                 -] [- 49,125,131,144,256
                        │ With                                            -]/[- 79
                        │ Cap                                             -(R)  134
                        │
                        │ %M0210
                        └──┤ ├──┘
                           0052

Synch                                                                   << RUNG 124  STEP #0640 >>
pos
infeed
 AV_1
%M0200                                                           %T0035
──┤/├──────────────────────────────────────────────────────────────(^)──  (* End of synch signal              *)
                                                                          Cross reference for %T0035
                                                                          -] [- 125

Package                                                                 << RUNG 125  STEP #0642 >>
at belt Start           End of
brake   belt    With    synch
disch   brake   Cap     signal
 B104   G005_SF                                                   CAP_5
%I0027  %Q0021  %M0210  %T0035                                   %M0405
──┤ ├────┤ ├────┤/├────┤ ├──────────────────────────────────────(S)──  (* Cap in carrier chain pos 5       *)
          0123    0052    0124                                            Cross reference for CAP_5
                                                                          -] [- 122
                                                                          -]/[- 126,134
                                                                          FBIO  (142)

Cap in  Cap in  Cap in  Cap in  Cap in                                  << RUNG 126  STEP #0647 >>
index   index   carrier chain   carrier
wheel   wheel   chain   chain   chain
pos 1   pos 2   pos 3   pos 4   pos 5
 CAP_1   CAP_2   CAP_3   CAP_4   CAP_5
%M0401  %M0402  %M0403  %M0404  %M0405                         %M0305
──┤/├────┤/├────┤/├────┤/├────┤/├──────────────────────────────( )──  (* No caps before station 5         *)
 0139                            0125                                     Cross reference for %M0305
                                                                          -] [- 127,177
                                                                          -]/[- 118

Program: D484631                   C:\LM90\TCAP47\D484631                                   Block: _MAIN
```

EM1.1TH900627en.fm

```
06-16-03  10:35                    GE FANUC SERIES 90-30/90-20/MICRO (v9.02)                    Page    29
                                        Tetra Cap Applicator 47 -0100
                                   48463-0001 ELD 001 AD 030612 JNT ECM:135545

No caps Cap in  Cap in  Cap in  Cap in                                   << RUNG 127  STEP #0653 >>
before  carrier carrier carrier carrier
station chain   chain   chain   chain
5       pos 6   pos 7   pos 8   pos 9
         CAP_6   CAP_7   CAP_8   CAP_9
%M0305  %M0406  %M0407  %M0408  %M0409                          %M0310
──┤ ├────┤/├────┤/├────┤/├────┤/├──────────────────────────────( )──  (* No caps before station 9         *)
 0126                                                                   Cross reference for %M0310
                                                                        -] [- 78,128
                                                                        -]/[- 26

No caps Cap in  Cap in  Cap in  Cap in  Cap in                          << RUNG 128  STEP #0659 >>
before  carrier carrier carrier carrier carrier
station chain   chain   chain   chain   chain
9       pos 10  pos 11  pos 12  pos 13  pos 14
        CAP_10  CAP_11  CAP_12  CAP_13  CAP_14
%M0310  %M0410  %M0411  %M0412  %M0413  %M0414                  %M0315
──┤ ├────┤/├────┤/├────┤/├────┤/├────┤/├──────────────────────( )──  (* No caps or pack in chain         *)
 0127                                                                   Cross reference for %M0315
                                                                        -] [- 78,80,129

No caps                                                                 << RUNG 129  STEP #0666 >>
or pack
in      With
chain   Cap

%M0315  %M0210                                                  %T0040
──┤ ├────┤ ├──────────────────────────────────────────────────(^)──  (* Last pack left machine           *)
 0128    0052                                                           Cross reference for %T0040
                                                                        -] [- 133
                                                                        -]/[- 116

Package                                                                 << RUNG 130  STEP #0669 >>
at belt
brake
disch
 B104                                                           B_104_
%I0027                                                          %T0045
──┤ ├──────────────────────────────────────────────────────────(^)──  (* Package at belt brake disch      *)
                                                                        Cross reference for B_104_
                                                                        -] [- 134,182

No                                                                      << RUNG 131  STEP #0671 >>
package Start
at      belt
infeed  brake
        G005_SF
%M0235  %Q0021                                                  %T0050
──┤ ├────┤ ├──┌──────┐──────────────────────────────────────────(^)──  (* No pack stop belt brake          *)
 0072    0123  │ TMR  │                                                 Cross reference for %T0050
               │0.10s │                                                 -] [- 134
         CONST ─│ PV   │                                                 -]/[- 115,116
         +00150 │      │
               └──────┘
               No pack
               stop
               belt
               brake

               %R0221

Program: D484631                    C:\LM90\TCAP47\D484631                                   Block: _MAIN
```

EM1.1TH900627en.fm

```
06-16-03  10:35                    GE FANUC SERIES 90-30/90-20/MICRO (v9.02)                    Page    30
                                        Tetra Cap Applicator 47 -0100
                                   48463-0001 ELD 001 AD 030612 JNT ECM:135545

 >>>>
```

```
06-16-03  10:35                    GE FANUC SERIES 90-30/90-20/MICRO (v9.02)                    Page    31
                                        Tetra Cap Applicator 47 -0100
                                   48463-0001 ELD 001 AD 030612 JNT ECM:135545

 (*****************************************************************************)
 (*                                                                           *)
 (* CAP CONTROL, MASTER CONVEYOR                                              *)
 (*                                                                           *)
 (*****************************************************************************)

                 Carrier                                                    << RUNG 136  STEP #0699 >>
Check            chain
cap at  Cap at   shift
index   index    reg
 AV_6
%M0205  %M0600  %T0052                                          %M0395
──┤ ├──────┤ ├──────┤/├──────────────────────────────────────────( )──  (* Cap pushed by pusher            *)
         0169    0141                                                     Cross reference for %M0395
Cap                                                                       -] [- 136,138,181
pushed
by
pusher

%M0395
──┤ ├──────────┘
 0136

ALW_OFF                                                                    << RUNG 137  STEP #0704 >>
%S0008                                                          %M0400
──┤ ├──────────────────────────────────────────────────────────────( )──  (* CapFrom index to carrier        *)
                                                                           Cross reference for %M0400
                                                                           FBIO  142

Cap                                                                        << RUNG 138  STEP #0706 >>
pushed  Index
by      out of  With
pusher  pos.    Cap

%M0395  %M0615  %M0210                                          %T0055
──┤ ├──────┤/├──────┤ ├──────────────────────────────────────────(^)──  (* Cap to index wheel              *)
 0136    0175    0052                                                     Cross reference for %T0055
                                                                           -] [- 139

        Cap to                                                             << RUNG 139  STEP #0710 >>
        index
Step 2  wheel
STEP_2                                                           CAP_1
%M0102  %T0055                                                  %M0401
──┤ ├──────┤ ├──────────────────────────────────────────────────────(S)──  (* Cap in index wheel pos 1        *)
 0030    0138                                                              Cross reference for CAP_1
                                                                           -]/[- 126,178
                                                                           FBIO  142

 >>>>
```

```
06-16-03  10:35                    GE FANUC SERIES 90-30/90-20/MICRO (v9.02)                    Page    32
                                        Tetra Cap Applicator 47 -0100
                                 48463-0001 ELD 001 AD 030612 JNT ECM:135545
```

```
Carrier                                                                  << RUNG 142  STEP #0716 >>
chain
shift
reg

%T0052
──┤ ├──┌──────┐──
 0141    SHFR_
          BIT
Step 0
STEP_0
%M0100                  CAP_END
──┤/├──R    Q──%M0417
 0022     LEN
         00016
CapFrom
index
to
carrier
%M0400 ─IN
Cap in
index
wheel
pos 1
 CAP_1
%M0401 ─ST
```

```
Program: D484631                    C:\LM90\TCAP47\D484631                    Block: _MAIN
```

EM1.1TH900627en.fm

```
06-16-03  10:35                    GE FANUC SERIES 90-30/90-20/MICRO (v9.02)                    Page    33
                                        Tetra Cap Applicator 47 -0100
                                   48463-0001 ELD 001 AD 030612 JNT ECM:135545

 (*************************************************************************)
 (*                                                                       *)
 (* DRYING AIR NOZZLE                                                     *)
 (*                                                                       *)
 (*************************************************************************)

Main                                                                      << RUNG 144  STEP #0720 >>
motor   With
speed 2 Cap
G002_S1                                                     Y108
%Q0019  %M0210                                             %Q0001
──┤ ├──┤ ├──────────────────────────────────────────────────( )──  (* Drying air nozzle                *)
 0087    0052                                                      Cross reference for Y108
                                                                            NONE
Start
belt
brake
G005_SF
%Q0021
──┤ ├──
 0134
```

EM1.1TH900627en.fm

```
06-16-03  10:35                    GE FANUC SERIES 90-30/90-20/MICRO (v9.02)                    Page    34
                                          Tetra Cap Applicator 47 -0100
                                   48463-0001 ELD 001 AD 030612 JNT ECM:135545

 (*************************************************************************)
 (*                                                                       *)
 (* INFEEDER,PADDLE ELEVATOR                                              *)
 (*                                                                       *)
 (*************************************************************************)

Cap                                                                << RUNG 146  STEP #0725 >>
conv
max
queue
 B196
%I0046                                                   %M0525
──┤ ├──┌TMR──────────────────────────────────────────────(S)──  (* Cap conv max queue                *)
       │0.01s                                                    Cross reference for %M0525
                                                                 -]/[- 92,159
 CONST ─┤PV                                                      -(R)  147
 +00050
       └──────
        Cap
        conv
        max
        queue

        %R0416

        Cap                                                        << RUNG 147  STEP #0728 >>
        conv
        max
Step 2  queue
STEP_2   B196
%M0102  %I0046                                           %M0525
──┤ ├──┤/├──┌TMR──────────────────────────────────────────(R)──  (* Cap conv max queue                *)
 0030          │0.01s                                            Cross reference for %M0525
                                                                 -]/[- 92,159
         CONST ─┤PV                                              -(S)  146
         +00050
               └──────
                Cap
                conv
                no max
                queue

                %R0413

        Low                                                        << RUNG 148  STEP #0732 >>
        level   In-
        In-     feeder
Step 2  feeder  forward
STEP_2   B199   G010_SF
%M0102  %I0040  %Q0010                                   %M0530
──┤ ├──┤ ├──┤ ├──┌TMR──────────────────────────────────────(S)──  (* Low level In- feeder             *)
 0030           0161  │0.01s                                      Cross reference for %M0530
                                                                 -] [- 155
                CONST ─┤PV                                        -(R)  149
                +00300
                       └──────
                        Low
                        level
                        In-
                        feeder

                        %R0419

Low                                                                << RUNG 149  STEP #0737 >>
level
In-
feeder
 B199
%I0040                                                   %M0530
──┤/├──┌OFDT──────┌TMR──────────────────────────────────────(R)──  (* Low level In- feeder             *)
       │0.01s     │0.01s                                          Cross reference for %M0530
                                                                 -] [- 155
 CONST ─┤PV   CONST ─┤PV                                          -(S)  148
 +00015       +00100
       └──────     └──────
        No low      No low
        level       level
        infeed      In-
        2           feeder

        %R0431      %R0422

Empty-                                                             << RUNG 150  STEP #0741 >>
ing
In-
feeder
 S116H
%I0049                                                   %T0100
──┤ ├──────────────────────────────────────────────────(^)──  (* Pulse empty- ing   on             *)
                                                                 Cross reference for %T0100
                                                                 -] [- 152
                                                                 -]/[- 271

Program: D484631                   C:\LM90\TCAP47\D484631                                  Block: _MAIN
```

EM1.1TH900627en.fm

```
06-16-03  10:35                    GE FANUC SERIES 90-30/90-20/MICRO (v9.02)                    Page    35
                                        Tetra Cap Applicator 47 -0100
                                   48463-0001 ELD 001 AD 030612 JNT ECM:135545

Empty-                                                                    << RUNG 151  STEP #0743 >>
ing
In-
feeder
 S116H
%I0049                                                        %T0101
──┤/├──────────────────────────────────────────────────────────(^)──  (* Pulse empty- ing  off          *)
                                                                          Cross reference for %T0101
                                                                          -]/[- 152

                                                                          << RUNG 152  STEP #0745 >>
                Pulse
                empty-          Cap
                ing             chute
Step 2  Step 3  on              closed
STEP_2  STEP_3                   B200
%M0102  %M0103  %T0100          %I0050                        %M0540
──┤ ├────┤/├──┬──┤ ├──────────┬──┤/├──────────────────────────( )──  (* Empty- ing  In- feeder          *)
 0030    0034  │ 0150         │                                         Cross reference for %M0540
               │Empty-  Pulse │                                         -] [- 152,153,159,160
               │ing     empty-│                                         -]/[- 92,285,331
               │In-     ing   │
               │feeder  off   │
               │              │
               │%M0540  %T0101│
               └──┤ ├────┤/├──┘
                0152    0151

Empty-                                                                    << RUNG 153  STEP #0754 >>
ing
In-
feeder
                                                              H116S
%M0540                                                        %Q0035
──┤ ├──┬──────────────────────────────────────────────────────( )──  (* Empty In- feeder               *)
 0152  │                                                                 Cross reference for H116S
       │                                                                          NONE
Lamp   │
test   │
       │
%M0006 │
──┤ ├──┘
 0362

Alarm                                                                     << RUNG 154  STEP #0757 >>
no
rotate
In-feed

%M0925                                                        %M0547
──┤ ├──┬──────────────────────────────────────────────────────( )──  (* Not allowed to run elevat      *)
 0322  │                                                                 Cross reference for %M0547
Not    │                                                                 -] [- 154
allowed Rotate                                                           -]/[- 155
to run  guard                                                            -]/[- 155
elevat  In-feed
       │
%M0547 %T0095
──┤ ├────┤/├──┘
 0154    0320

        Alarm   Low     Not             Low                               << RUNG 155  STEP #0762 >>
        doors   level   allowed In-     level
        In-     In-     to run  feeder  paddle
Step 2  feeder  feeder  elevat  forward elevat
STEP_2                          G010_SF                        K020
%M0102  %M0035  %M0530  %M0547  %Q0010  %M0887                %Q0009
──┤ ├────┤/├────┤ ├────┤/├────┤ ├────┤/├──────────────────────( )──  (* Paddle elevat                  *)
 0030    0309    0149    0154    0161    0272                          Cross reference for K020
                                                                          -] [- 277

Alarm                                                                     << RUNG 156  STEP #0769 >>
no
rotate
In-feed

%M0925                                                        %T0130
──┤ ├──────────────────────────────────────────────────────────(^)──  (* Pulse no rotate In-feed         *)
 0322                                                                    Cross reference for %T0130
                                                                          -] [- 157

Pulse                                                                     << RUNG 157  STEP #0771 >>
no
rotate
In-feed

%T0130                                                        %M0552
──┤ ├──────────────────────────────────────────────────────────(SM)─  (* No rotate In- feeder            *)
 0156                                                                    Cross reference for %M0552
                                                                          -] [- 163
                                                                          -]/[- 160
                                                                          -(RM) 158

Program: D484631                   C:\LM90\TCAP47\D484631                                   Block: _MAIN
```

EM1.1TH900627en.fm

```
06-16-03  10:35                    GE FANUC SERIES 90-30/90-20/MICRO (v9.02)                    Page    36
                                        Tetra Cap Applicator 47 -0100
                                   48463-0001 ELD 001 AD 030612 JNT ECM:135545

In-                                                                          << RUNG 158  STEP #0773 >>
feeder
reverse
G010_SR
%Q0011                                                          %M0552
──┤ ├──────────────────────────────────────────────────────────(RM)─  (* No rotate In- feeder            *)
 0165                                                                    Cross reference for %M0552
                                                                         -] [- 163
                                                                         -]/[- 160
                                                                         -(SM) 157

        Alarm   Alarm           Cap             Alarm                    << RUNG 159  STEP #0775 >>
        doors   low             conv    Cap     door
        In-     level   With    max     chute   In-
Step 2  feeder  In-feed  Cap     queue   closed  feeder
STEP_2                                   B200    H030
%M0102  %M0035  %M0049  %M0210  %M0525  %I0050  %M0158
──┤ ├────┤/├────┤/├────┤ ├────┤/├────┤ ├────┤/├──────────────────────<+>
 0030    0309    0280    0052    0147            0310
                Empty-
                ing
                In-
                feeder

                %M0540
                ──┤ ├──────────────────────────
                 0152

                No      Low                                              << RUNG 160  STEP #0785 >>
        Cap     rotate  level
        conv    In-     paddle
         K022   feeder  elevat
        %Q0022  %M0552  %M0887                                  %M0550
<+>─────┤ ├────┤/├────┤/├──────────────────────────────────────( )──  (* Start In- feeder                *)
         0092    0158    0272                                            Cross reference for %M0550
        Empty-                                                           -] [- 161,166,321
        ing
        In-
        feeder

        %M0540
        ──┤ ├──
         0152

                Alarm                                                    << RUNG 161  STEP #0792 >>
Start   In-     no
In-     feeder  rotate
feeder  reverse In-feed
        G010_SR                                                 G010_SF
%M0550  %Q0011  %M0925                                          %Q0010
──┤ ├────┤/├────┤/├────┤ TMR ├──────────────────────────────────( )──  (* In- feeder forward              *)
 0160    0165    0322    0.10s                                           Cross reference for G010_SF
                         PV                                              -] [- 148,155,278
                CONST ─┤                                                 -]/[- 162
                +00005

                        In-
                        feeder
                        forward

                        %R0115

                Doors                                                    << RUNG 162  STEP #0797 >>
In-     Doors   in-
feeder  in-     feeder
forward feeder  circuit
G010_SF  L14
%Q0010  %I0031  %I0032                                          %M0555
──┤/├────┤ ├────┤ ├────┤ TMR ├──────────────────────────────────( )──  (* In- feeder reverse delay        *)
 0161                    0.10s                                           Cross reference for %M0555
                         PV                                              -] [- 163
                CONST ─┤
                +00025

                        In-
                        feeder
                        reverse
                        delay

                        %R0124

Program: D484631                   C:\LM90\TCAP47\D484631                                   Block: _MAIN
```

EM1.1TH900627en.fm

```
06-16-03  10:35                    GE FANUC SERIES 90-30/90-20/MICRO (v9.02)                    Page    37
                                        Tetra Cap Applicator 47 -0100
                                   48463-0001 ELD 001 AD 030612 JNT ECM:135545

In-     No                          Doors                                   << RUNG 163  STEP #0802 >>
feeder  rotate          In-     Doors   in-
reverse In-             feeder  in-     feeder
delay   feeder  Step 2  reverse feeder  circuit
                STEP_2          L14
%M0555  %M0552  %M0102  %M0554  %I0031  %I0032                  %M0553
──┤ ├────┤ ├──┬──┤ ├────┤/├────┤ ├────┤ ├──────────────────────( )──  (* In- feeder reverse              *)
 0162    0158  │  0030    0164                                          Cross reference for %M0553
               │                                                        -] [- 163,164,165
In-            │
feeder         │
reverse        │
               │
%M0553         │
──┤ ├──────────┘
 0163

In-                                                                     << RUNG 164  STEP #0810 >>
feeder
reverse

%M0553                                                          %M0554
──┤ ├──┌──────┐──────────────────────────────────────────────────( )──  (* In- feeder reverse              *)
 0163  │ TMR  │                                                         Cross reference for %M0554
       │0.01s │                                                         -]/[- 163,165
 CONST ─│ PV   │
 +00050└──────┘

       In-
       feeder
       reverse

       %R0118

In-     In-                                                             << RUNG 165  STEP #0813 >>
feeder  feeder
reverse reverse
                                                                G010_SR
%M0553  %M0554                                                  %Q0011
──┤ ├────┤/├──────────────────────────────────────────────────( )──  (* In- feeder reverse              *)
 0163    0164                                                           Cross reference for G010_SR
                                                                        -] [- 158
                                                                        -]/[- 161

Start                                                                   << RUNG 166  STEP #0816 >>
In-
feeder

%M0550                                                          %M0556
──┤ ├──┌──────┐──────────────────────────────────────────────────( )──  (* Cap blow In- feeder             *)
 0160  │OFDT  │                                                         Cross reference for %M0556
       │0.10s │                                                         -] [- 167
 CONST ─│ PV   │
 +00010└──────┘

       Cap
       blow
       In-
       feeder

       %R0109

Cap     Alarm                                                           << RUNG 167  STEP #0819 >>
blow    no
In-     rotate
feeder  In-feed
                                                                 Y162
%M0556  %M0925                                                  %Q0004
──┤ ├────┤/├──────────────────────────────────────────────────( )──  (* Cap blow In- feeder             *)
 0166    0322                                                           Cross reference for Y162
                                                                                NONE

Program: D484631                    C:\LM90\TCAP47\D484631                                  Block: _MAIN
```

EM1.1TH900627en.fm

```
06-16-03  10:35                    GE FANUC SERIES 90-30/90-20/MICRO (v9.02)                    Page    38
                                        Tetra Cap Applicator 47 -0100
                                   48463-0001 ELD 001 AD 030612 JNT ECM:135545

 (*************************************************************************)
 (*                                                                       *)
 (* PUSHER TO INDEX WHEEL                                                 *)
 (*                                                                       *)
 (*************************************************************************)

Cap at                                                                    << RUNG 169  STEP #0823 >>
index
 B193
%I0043                                                   %M0600
──┤ ├──┌──────┐──────────────────────────────────────────( )──  (* Cap at index                    *)
        │ TMR  │                                                 Cross reference for %M0600
        │0.01s │                                                 -] [- 136
 CONST ─│PV    │
 +00003 └──────┘

        Cap at
        index

        %R0401

Cap                                                                       << RUNG 170  STEP #0826 >>
conv
min
queue
 B197
%I0047                                                   %M0610
──┤/├──┌──────┐──────────────────────────────────────────(S)──  (* Cap conv no queue              *)
        │ TMR  │                                                 Cross reference for %M0610
        │0.10s │                                                 -] [- 78
 CONST ─│PV    │                                                 -]/[- 178
 +00010 └──────┘                                                 -(R)  171

        Cap
        conv no
        queue

        %R0404

Cap                                                                       << RUNG 171  STEP #0829 >>
conv
min
queue
 B197
%I0047                                                   %M0610
──┤ ├──┌──────┐──────────────────────────────────────────(R)──  (* Cap conv no queue              *)
        │ TMR  │                                                 Cross reference for %M0610
        │0.10s │                                                 -] [- 78
 CONST ─│PV    │                                                 -]/[- 178
 +00020 └──────┘                                                 -(S)  170

        Cap
        conv
        min
        queue

        %R0407

Package                                                                   << RUNG 172  STEP #0832 >>
at belt
brake
disch
 B104                                                    B104__
%I0027                                                   %T0060
──┤ ├──────────────────────────────────────────────────────(v)──  (* Package at belt brake disch     *)
                                                                  Cross reference for B104__
                                                                  -] [- 66,67,173

Program: D484631                   C:\LM90\TCAP47\D484631                    Block: _MAIN
```

EM1.1TH900627en.fm

```
06-16-03  10:35                    GE FANUC SERIES 90-30/90-20/MICRO (v9.02)                    Page    39
                                        Tetra Cap Applicator 47 -0100
                                   48463-0001 ELD 001 AD 030612 JNT ECM:135545

|        Package                                                          << RUNG 173  STEP #0834 >>
|Queue   at belt
|infeed  brake
|time    disch
|        B104__
|%M0285  %T0060          ┌──────┐                                  %M0510
├──┤ ├────┤ ├──────────>│UPCTR │──────────────────────────────────( )──  (* Infeed brake full                *)
|  0114    0172          │      │                                           Cross reference for %M0510
|                        │      │                                           -] [- 177
|Queue                   │      │
|infeed  Auto            │      │
|time    empty           │      │
|                        │      │
|%M0285  %M0295          │      │
├──┤/├────┤ ├──┬────────│R     │
|  0114    0116          │      │
|                        │      │
|Step 3                  │      │
|STEP_3                  │      │
|%M0103                  │      │
├──┤/├──────────┼─ CONST ─│PV    │
|  0034          │  +00002 │      │
|                        │      │
|Alarm                   │      │
|fallen                  │      │
|package                 │      │
|                        │      │
|%M0037                  │      │
├──┤ ├──────────┼────────└──────┘
|  0246          │
|AlarmNo         │
|package         │
|to              │
|infeed          │
|                │
|%M0040          │
├──┤ ├──────────┘
|  0260

|Synch                                                                    << RUNG 174  STEP #0843 >>
|pos
|pusher
|AV_5                                                            AV_5_
|%M0204                                                         %T0058
├──┤ ├──────────────────────────────────────────────────────────────(^)──  (* Start pusher *)
|                                                                          Cross reference for AV_5_
|                                                                          -] [- 66,67,179
|
|                Freque.                                                  << RUNG 175  STEP #0845 >>
|        Check   convert
|Cap at  index   appli-
|index   move    cator
|B193    AV_9    K002
|%I0043  %M0208  %Q0018                                          %M0615
├──┤ ├────┤ ├────┤ ├──────────────────────────────────────────────( )──  (* Index out of pos.               *)
|                 0088          │                                          Cross reference for %M0615
|                               │                                          -] [- 175,262,264
|Index   Pulse                  │                                          -]/[- 37,81,138,184
|out of  Alarm                  │
|pos.    Reset                  │
|         S03H_                 │
|%M0615  %T0004                 │
├──┤ ├────┤/├──────────────────┘
|  0175    0363

|Preheat                                                                  << RUNG 176  STEP #0852 >>
|nozzle
|element
|K004
|%Q0020                                                          %M0297
├──┤ ├──┬─ TMR ──────────────────────────────────────────────────( )──  (* Delay belt brake inlet           *)
|  0109  │ 0.10s                                                           Cross reference for %M0297
|        │                                                                 -] [- 180
|        │ CONST ─ PV
|        │ +00050
|        │
|        %R0445

Program: D484631                    C:\LM90\TCAP47\D484631                                   Block: _MAIN
```

EM1.1TH900627en.fm

```
06-16-03  10:35                    GE FANUC SERIES 90-30/90-20/MICRO (v9.02)                    Page    40
                                          Tetra Cap Applicator 47 -0100
                                   48463-0001 ELD 001 AD 030612 JNT ECM:135545

                 Alarm          Cap on                                          << RUNG 177  STEP #0855 >>
        Alarm    low            carrier Queue   Infeed
        fallen   hotmelt With   before  infeed  brake
Step 3  package  temp    Cap    index   time    full
STEP_3
%M0103  %M0037  %M0039  %M0210  %M0270  %M0285  %M0510
──┤ ├──────┤/├──────┤/├──────┤ ├──────┤/├──────┤ ├──────────────────────────<+>
 0034    0246    0254    0052    0316    0114    0173
                                        Queue   No caps Package
                                        infeed  before  at belt
                                        time    station brake
                                                5       disch
                                                         B104
                                        %M0285  %M0305  %I0027
                                        ──┤ ├──────┤ ├──────┤ ├──
                                         0114    0126

                                        Auto
                                        empty

                                        %M0295
                                        ──┤ ├──
                                         0116

                 Alarm                                   Cap in                 << RUNG 178  STEP #0869 >>
        Cap      missing Alarm   Alarm   Alarm   Alarm   index
        conv no  Cap on  fallen  queue   jammed  lead    wheel
        queue    package package outfeed outfeed rail    pos 1
                                                          CAP_1
        %M0610  %M0816  %M0820  %M0825  %M0875  %M0920  %M0401
<+>──────┤/├──────┤/├──────┤/├──────┤/├──────┤/├──────┤/├──────────────────<+>
         0171            0244    0249    0266    0312    0139

                 AlarmNo Alarm                   Reduced Alarm                  << RUNG 179  STEP #0878 >>
                 package no pack         Alarm   speed   no
        Start    to      from    Run     pre     no      cap
        pusher   infeed  infeed  enable  heater  package pusher
         AV_5_
        %T0058  %M0821  %M0621  %M0500  %M0921  %M0215  %M0910          %M0296
<+>──────┤ ├──────┤/├──────┤/├──────┤ ├──────┤/├──────┤/├──────┤/├──────────( )──  Cross reference for %M0296
         0174    0258    0182    0189    0338    0067    0288                        -] [- 180

        Delay                                                                   << RUNG 180  STEP #0887 >>
        belt
        brake
        inlet

%M0296  %M0297                                                          %M0620
──┤ ├──────┤ ├──────────────────────────────────────────────────────────( )──  (* Start pusher to index           *)
 0179    0176                                                                   Cross reference for %M0620
                                                                                -] [- 184

Cap                                                                             << RUNG 181  STEP #0890 >>
pushed
by
pusher

%M0395                                                                  %T0046
──┤ ├──────────────────────────────────────────────────────────────────(^)──  (* Cap to index                    *)
 0136                                                                           Cross reference for %T0046
                                                                                -] [- 182

Cap to                                                                          << RUNG 182  STEP #0892 >>
index

%T0046                                                                  %M0621
──┤ ├──────────────>UPCTR──────────────────────────────────────────────( )──  (* Alarm no pack from infeed       *)
 0181                 │                                                         Cross reference for %M0621
Package               │                                                         -] [- 256
at belt               │                                                         -]/[- 179
brake                 │
disch                 │
B_104_                │
%T0045                │
──┤ ├──────────────R  │
 0130                 │
                      │
Pulse                 │
Alarm                 │
Reset                 │
 S03H_                │
%T0004                │
──┤ ├──── CONST ─PV   │
 0363    +00003       │
Reset                 │
no pack               │        Alarm
from                  │        no pack
infeed                │        from
                      │        infeed
%M0622                │
──┤/├──────────────   │        %R0513
 0183
```

EM1.1TH900627en.fm

```
06-16-03  10:35                    GE FANUC SERIES 90-30/90-20/MICRO (v9.02)                    Page    41
                                        Tetra Cap Applicator 47 -0100
                                   48463-0001 ELD 001 AD 030612 JNT ECM:135545

Outfeed                                                                    << RUNG 183  STEP #0898 >>
jammed  Step 3
 B121   STEP_3
%I0033  %M0103                                                   %M0622
──┤ ├────┤ ├──────────────────────────────────────────────────────( )──  (* Reset no pack from infeed        *)
         0034                                                              Cross reference for %M0622
Reset                                                                      -] [- 183
no pack                                                                    -]/[- 182
from
infeed

%M0622
──┤ ├──
 0183

Start   Cap                                                                << RUNG 184  STEP #0902 >>
pusher  pusher  Alarm   Index
to      rear    cap     out of
index   pos     pusher  pos.
         B191                                                     Y160
%M0620  %I0041  %M0915  %M0615                                   %Q0002
──┤ ├────┤ ├────┤/├────┤/├──────────────────────────────────────( )──  (* Pusher,cap to index             *)
 0180            0298    0175                                              Cross reference for Y160
        Cap                                                                -] [- 184,297
Pusher, pusher                                                             -]/[- 185,296
cap to  front
index   pos
 Y160    B192
%Q0002  %I0042
──┤ ├────┤/├──
 0184

                Pusher,                                                    << RUNG 185  STEP #0910 >>
        With    cap to  Cap
Step 2  Cap     index   conv
STEP_2           Y160    K022                                     Y161
%M0102  %M0210  %Q0002  %Q0022                                   %Q0003
──┤ ├────┤ ├────┤/├────┤ ├──────────────────────────────────────( )──  (* Cap blow conv                    *)
 0030    0052    0184    0092                                              Cross reference for Y161
                                                                                   NONE
```

EM1.1TH900627en.fm

```
06-16-03  10:35                    GE FANUC SERIES 90-30/90-20/MICRO (v9.02)                    Page    42
                                        Tetra Cap Applicator 47 -0100
                                   48463-0001 ELD 001 AD 030612 JNT ECM:135545

 (*************************************************************************)
 (*                                                                       *)
 (* COMMUNICATION WITH OTHER EQUIPMENT                                    *)
 (*                                                                       *)
 (*************************************************************************)

        Main    Alarm   Alarm                                                << RUNG 187  STEP #0916 >>
        motor   fallen  queue
Step 3  speed 2 package outfeed
STEP_3  G002_S1                                                  K099
%M0103  %Q0019  %M0820  %M0825                                   %Q0040
──┤ ├────┤ ├────┤/├────┤/├──────────────────────────────────────( )──  (* Ready signal                        *)
 0034    0087    0244    0249                                            Cross reference for K099
                                                                         -]/[- 70
        Lower
        infeed
         B903
        %I0025
        ──┤/├──

Infeed  Outfeed                                                          << RUNG 188  STEP #0923 >>
conv    jammed
 K001    B121                                                    K098
%Q0017  %I0033                                                   %Q0031
──┤ ├────┤ ├──────────────────────────┬──────────────────────────( )──  (* Package coming                      *)
 0071                                  │ OFDT                                Cross reference for K098
                                       │ 0.10s                                     NONE
        Queue   Switch                 │
        outfeed in                     │
        left    right                  │
         B905    line                  │
        %I0038  %I0059                 │
        ──┤ ├────┤/├──────────────────┤
                                       │ CONST ─ PV
                                       │ +00100
        Queue           Switch         │
        outfeed         in             │
        right           right          │
         B917            line          │ Package
        %I0060           B916          │ coming
        ──┤ ├──────────┤ ├──────────────┘ %R0130
                Queue
        B917    outfeed
        connect left
                 B905
        %M0784  %I0038
        ──┤/├────┤ ├──

Run     Switch                                                           << RUNG 189  STEP #0937 >>
enable  in
down s  right
left    line
X090_1   B916
%I0053  %I0059                                                   %M0500
──┤ ├────┤/├──────────────────────────────────────────────────────( )──  (* Run enable                          *)
                                                                         Cross reference for %M0500
Run     Switch                                                           -] [- 121,179,303,343
enable  in                                                               -]/[- 77,134,302,304
down s  right
right   line
X090_7   B916
%I0058  %I0059
──┤ ├────┤ ├──
```

EM1.1TH900627en.fm

```
06-16-03  10:35                    GE FANUC SERIES 90-30/90-20/MICRO (v9.02)                    Page    43
                                        Tetra Cap Applicator 47 -0100
                                   48463-0001 ELD 001 AD 030612 JNT ECM:135545

 (*****************************************************************************)
 (*                                                                           *)
 (* LUBRICATION                                                               *)
 (*                                                                           *)
 (*****************************************************************************)

        Nmbr of                                                          << RUNG 191  STEP #0944 >>
Lubric  lubric
oil     at low
level   level
 B143
%I0037  %M0027                                                  %M0029
 ─┤ ├──┬─┤/├──────────────────────────────────────────────────( )──  (* Memory level lubri cant          *)
         │ 0196                                                        Cross reference for %M0029
Memory   │                                                             -] [- 191,192
level    │
lubri    │
cant     │
         │
%M0029   │
 ─┤ ├──┘
 0191

                Memory                                                   << RUNG 192  STEP #0948 >>
Lubric  Air     level
inter-  press   lubri
vall    switch  cant
         B100                                                    Y114
%M0013  %I0004  %M0029                                          %Q0030
 ─┤ ├──┬─┤ ├──┬─┤ ├──────────────────────────────────────────( )──  (* Lubri- cation                    *)
 0194           0191                                                   Cross reference for Y114
                                                                       -] [- 195

        Fault                                                            << RUNG 193  STEP #0952 >>
Pulse   no high
Alarm   lubric
Reset   press
 S03H_
%T0004  %M0015
 ─┤ ├──┬─┤ ├──┬─┤MOVE_├─
 0363   0197    │ INT │
                │     │
                │     │
                │     
```

```
06-16-03  10:35                    GE FANUC SERIES 90-30/90-20/MICRO (v9.02)                    Page    44
                                        Tetra Cap Applicator 47 -0100
                                   48463-0001 ELD 001 AD 030612 JNT ECM:135545

Lubric                                                                          << RUNG 196  STEP #0963 >>
finish

%M0014                                                          %M0027
 0195   >UPCTR                                                   ( )   (* Nmbr of lubric at low level      *)
                                                                        Cross reference for %M0027
Lubric                                                                  -]/[- 191
oil
level
 B143
%I0037
        R
 CONST  PV
 +00010
        Nmbr of
        lubric
        at low
        level

        %R0043

Lubric  Air             Pulse                                           << RUNG 197  STEP #0967 >>
inter-  press   Lubric  Alarm
vall    switch  press   Reset
         B100    B142   S03H_
%M0013  %I0004  %I0036  %T0004                                  %M0015
 0194                    0363   TMR                              ( )   (* Fault no high lubric press       *)
Fault                           0.10s                                   Cross reference for %M0015
no high                                                                 -] [- 193,197,199
lubric
press

%M0015
 0197                   CONST  PV
                        +00080
                                Fault
                                no high
                                lubric
                                press

                                %R0025

Lubric                                                                  << RUNG 198  STEP #0974 >>
press
 B142
%I0036                                                          %M0016
                        TMR                                     ( )   (* Fault no low lubric press        *)
                        0.10s                                           Cross reference for %M0016
Fault                                                                   -] [- 198,199
no low  Pulse
lubric  Alarm
press   Reset
         S03H_
%M0016  %T0004
 0198    0363   CONST  PV
                +00200
                        Fault
                        no low
                        lubric
                        press

                        %R0040

Lubric                                                                  << RUNG 199  STEP #0980 >>
oil
level
 B143
%I0037                                                          %M0073
                                                                ( )   (* Lubric fault                      *)
                                                                        Cross reference for %M0073
Fault                                                                   -] [- 228,230
no high                                                                 -]/[- 229
lubric
press

%M0015
 0197
Fault
no low
lubric
press

%M0016
 0198

Program: D484631                   C:\LM90\TCAP47\D484631                                   Block: _MAIN
```

EM1.1TH900627en.fm

```
06-16-03  10:35                    GE FANUC SERIES 90-30/90-20/MICRO (v9.02)                    Page    45
                                        Tetra Cap Applicator 47 -0100
                                   48463-0001 ELD 001 AD 030612 JNT ECM:135545

 >>>>
```

```
06-16-03  10:35                    GE FANUC SERIES 90-30/90-20/MICRO (v9.02)                    Page    46
                                        Tetra Cap Applicator 47 -0100
                                   48463-0001 ELD 001 AD 030612 JNT ECM:135545

 (*************************************************************************)
 (*                                                                       *)
 (* EXTERNAL HOSE BRAKE                                                   *)
 (*                                                                       *)
 (*************************************************************************)

Ext                                                                  << RUNG 203  STEP #0990 >>
hose
brake
sensor2
 B902
%I0016                                                   %M0012
──┤ ├──┌──────┐──────────────────────────────────────────( )──  (* Extern brake queue to DE         *)
        TMR                                                       Cross reference for %M0012
        0.10s                                                     -] [- 206
 CONST ─PV
 +00010
        └──────┘
        Extern
        brake
        queue
        to DE

        %R0016

        Ext                                                          << RUNG 204  STEP #0993 >>
        hose
        brake
Step 2  sensor1
STEP_2   B901
%M0102  %I0015                                           %M0010
──┤ ├──┤/├──┌──────┐──────────────────────────────────────( )──  (* Extern brake queue length        *)
 0030          TMR                                                 Cross reference for %M0010
               0.10s                                              -] [- 206
         CONST ─PV                                                -]/[- 205
         +00010
               └──────┘
               Extern
               brake
               queue
               length

               %R0010

Extern                                                               << RUNG 205  STEP #0997 >>
brake
queue
length

%M0010                                                   %M0011
──┤/├──┌──────┐──────────────────────────────────────────( )──  (* Extern brake space betw q        *)
 0204    TMR                                                      Cross reference for %M0011
         0.10s                                                    -]/[- 206
 CONST ─PV
 +00005
         └──────┘
         Extern
         brake
         space
         betw q

         %R0013

Program: D484631                    C:\LM90\TCAP47\D484631                    Block: _MAIN
```

EM1.1TH900627en.fm

```
06-16-03  10:35                    GE FANUC SERIES 90-30/90-20/MICRO (v9.02)                    Page    47
                                        Tetra Cap Applicator 47 -0100
                                   48463-0001 ELD 001 AD 030612 JNT ECM:135545

Extern                                                                  << RUNG 206  STEP #1000 >>
brake
queue
length  Step 1
        STEP_1                                              Y901
%M0010  %M0101                                             %Q0038
──┤ ├────┤ ├──────────────────────────────────────────────( )──  (* Ext hose brake                    *)
 0204   0028                                                       Cross reference for Y901
Extern                                                                     NONE
brake
space
betw q

%M0011
──┤/├──
 0205
Extern
brake
queue
to DE

%M0012
──┤ ├──
 0203

Alarm
fallen
package

%M0037
──┤ ├──
 0246
AlarmNo
package
to
infeed

%M0040
──┤ ├──
 0260

Step 2
STEP_2
%M0102
──┤/├──
 0030
```

EM1.1TH900627en.fm

```
06-16-03  10:35                    GE FANUC SERIES 90-30/90-20/MICRO (v9.02)                    Page    48
                                        Tetra Cap Applicator 47 -0100
                                   48463-0001 ELD 001 AD 030612 JNT ECM:135545

 (*************************************************************************)
 (*                                                                       *)
 (* SAFETY RELAYS                                                         *)
 (*                                                                       *)
 (*************************************************************************)

Em stop                                                          << RUNG 208  STEP #1009 >>
circuit

%I0002                                                   %Q0049
──┤ ├──────────────────────────────────────────────────────( )──  (* Emergency stop                  *)
                                                                 Cross reference for %Q0049
                                                                          NONE

Door                                                             << RUNG 209  STEP #1011 >>
applica
tor
circuit

%I0014                                                   %Q0050
──┤ ├──────────────────────────────────────────────────────( )──  (* Doors applicator                *)
                                                                 Cross reference for %Q0050
                                                                          NONE

Doors                                                            << RUNG 210  STEP #1013 >>
in-
feeder
circuit

%I0032                                                   %Q0051
──┤ ├──────────────────────────────────────────────────────( )──  (* Doors in- feeder                *)
                                                                 Cross reference for %Q0051
                                                                          NONE

Reset/                                                           << RUNG 211  STEP #1015 >>
Lamp
test
 S03H
%I0007                                                   %Q0052
──┤ ├──────────────────────────────────────────────────────( )──  (* Reset EMS relays                *)
                                                                 Cross reference for %Q0052
                                                                          NONE
In-             Door
feeder          applica
Restart Em stop tor
 S115     L12     L13
%I0012  %I0001  %I0013
──┤ ├────┤ ├────┤ ├──

Program: D484631                    C:\LM90\TCAP47\D484631                    Block: _MAIN
```

EM1.1TH900627en.fm

```
06-16-03  10:35                    GE FANUC SERIES 90-30/90-20/MICRO (v9.02)                    Page    49
                                        Tetra Cap Applicator 47 -0100
                                   48463-0001 ELD 001 AD 030612 JNT ECM:135545

 (*****************************************************************************)
 (*                                                                           *)
 (* ALARMS                                                                    *)
 (*                                                                           *)
 (*****************************************************************************)

        Alarm                                                                  << RUNG 213  STEP #1022 >>
        Em stop
Em stop LED
  L12    H006
%I0001  %M0151                                                   %M0030
──┤/├────┤/├──────────────────────────────────────────────────────(S)──  (* Alarm Em stop                    *)
        0215                                                                   Cross reference for %M0030
                                                                               -] [- 215
Em stop                                                                        -]/[- 23,69,215,355
circuit                                                                        -(R)  214
%I0002
──┤/├──

Pulse                                                                          << RUNG 214  STEP #1026 >>
Alarm
Reset
 S03H_
%T0004                                                           %M0030
──┤ ├──────────────────────────────────────────────────────────(R)──  (* Alarm Em stop                    *)
 0363                                                                          Cross reference for %M0030
                                                                               -] [- 215
                                                                               -]/[- 23,69,215,355
                                                                               -(S)  213

        Alarm                                                                  << RUNG 215  STEP #1028 >>
Em stop Em stop Step 0
  L12           STEP_0                                            H006
%I0001  %M0030  %M0100                                           %M0151
──┤/├────┤/├────┤ ├──────────────────────────────────────────────( )──  (* Alarm Em stop LED               *)
        0214    0022                                                           Cross reference for H006
                                                                               -]/[- 213,356
Em stop                                                                        FBIO  (370)
circuit

%I0002
──┤/├──

Alarm
Em stop Flash
         FLASH
%M0030  %M0003
──┤ ├────┤ ├──
 0214    0014

Door                    Alarm                                                  << RUNG 216  STEP #1036 >>
applica         Em stop doors
tor     Em stop circuit LED     Step 0
  L13     L12            H007   STEP_0
%I0013  %I0001  %I0002  %M0152  %M0100                           %M0031
──┤/├────┤ ├────┤ ├────┤/├────┤ ├──────────────────────────────(S)──  (* Alarm doors                       *)
                        0218    0022                                           Cross reference for %M0031
Door                                                                           -] [- 218
applica                                                                        -]/[- 23,218,344
tor                                                                            -(R)  217
circuit

%I0014
──┤/├──

Pulse                                                                          << RUNG 217  STEP #1043 >>
Alarm
Reset
 S03H_
%T0004                                                           %M0031
──┤ ├──────────────────────────────────────────────────────────(R)──  (* Alarm doors                       *)
 0363                                                                          Cross reference for %M0031
                                                                               -] [- 218
                                                                               -]/[- 23,218,344
                                                                               -(S)  216

Program: D484631                   C:\LM90\TCAP47\D484631                                   Block: _MAIN
```

EM1.1TH900627en.fm

```
06-16-03  10:35                    GE FANUC SERIES 90-30/90-20/MICRO (v9.02)                    Page    50
                                        Tetra Cap Applicator 47 -0100
                                   48463-0001 ELD 001 AD 030612 JNT ECM:135545

Door                                                                                << RUNG 218  STEP #1045 >>
applica Alarm                   Em stop
tor     doors   Step 0  Em stop circuit
  L13           STEP_0    L12                                          H007
%I0013  %M0031  %M0100  %I0001  %I0002                                %M0152
──┤/├────┤/├────┤ ├──────┤ ├──────┤ ├──────────────────────────────────( )──  (* Alarm doors LED                  *)
         0217    0022                                                           Cross reference for H007
Door                                                                            -]/[- 216,350
applica                                                                         FBIO  (370)
tor
circuit

%I0014
──┤/├──┘

Alarm
doors   Flash
         FLASH
%M0031  %M0003
──┤ ├──────┤ ├──┘
 0217    0014

        Alarm                                                                   << RUNG 219  STEP #1055 >>
        motor
Motor   prot
prot    LED
MOTORS   H008
%I0003  %M0153                                                        %M0032
──┤/├────┤/├──────────────────────────────────────────────────────────(S)──  (* Alarm motor prot                 *)
         0221                                                                   Cross reference for %M0032
                                                                                -] [- 221
                                                                                -]/[- 23,221,344
                                                                                -(R)  220

Pulse                                                                           << RUNG 220  STEP #1058 >>
Alarm
Reset
 S03H_
%T0004                                                                %M0032
──┤ ├──────────────────────────────────────────────────────────────(R)──  (* Alarm motor prot                 *)
 0363                                                                           Cross reference for %M0032
                                                                                -] [- 221
                                                                                -]/[- 23,221,344
                                                                                -(S)  219

        Alarm                                                                   << RUNG 221  STEP #1060 >>
Motor   motor
prot    prot    Step 0
MOTORS          STEP_0                                                   H008
%I0003  %M0032  %M0100                                                  %M0153
──┤/├────┤/├────┤ ├──────────────────────────────────────────────────( )──  (* Alarm motor prot LED             *)
         0220    0022                                                           Cross reference for H008
                                                                                -]/[- 219,350
Alarm                                                                           FBIO  (370)
motor
prot    Flash
         FLASH
%M0032  %M0003
──┤ ├──────┤ ├──┘
 0220    0014

Main                                                                            << RUNG 222  STEP #1067 >>
air
valve
 Y100
%Q0005                                                                  %M0070
──┤ ├──┌──────┐──────────────────────────────────────────────────────( )──  (* Check air press Step up          *)
 0048  │ TMR  │                                                               Cross reference for %M0070
       │0.10s │                                                               -] [- 223,238
 CONST─│PV    │
 +00050└──────┘
        Check
        air
        press
        Step up

        %R0031
```

```
06-16-03  10:35                    GE FANUC SERIES 90-30/90-20/MICRO (v9.02)                    Page    51
                                        Tetra Cap Applicator 47 -0100
                                   48463-0001 ELD 001 AD 030612 JNT ECM:135545

Check                                                                          << RUNG 223  STEP #1070 >>
air             Air
press           press
Step up         switch
                 B100
%M0070          %I0004                                                  %M0071
 0222                    TMR                                            ( )    (* Superv air press                  *)
                         0.10s                                                  Cross reference for %M0071
                                                                                -] [- 223,225
Superv  Pulse
air     Alarm
press   Reset
         S03H_
%M0071  %T0004
 0223    0363    CONST  PV
                 +00010

                        Superv
                        air
                        press

                        %R0034

Main            Air                                                            << RUNG 224  STEP #1077 >>
air             press
valve           switch
 Y100            B100
%Q0005          %I0004                                                  %M0072
 0048                    TMR                                            ( )    (* Check no air press                 *)
                         0.10s                                                  Cross reference for %M0072
                                                                                -] [- 224,225,227,344,350
Check   Pulse                                                                   -]/[- 355,356
no air  Alarm
press   Reset
         S03H_
%M0072  %T0004
 0224    0363    CONST  PV
                 +00010

                        Check
                        no air
                        press

                        %R0037

        Alarm                                                                  << RUNG 225  STEP #1084 >>
Superv  air
press   press
         LED
         H009
%M0071  %M0154                                                          %M0033
 0223    0227                                                           (S)    (* Alarm air press                   *)
                                                                                Cross reference for %M0033
Check                                                                           -] [- 38,227
no air                                                                          -]/[- 81,85,227,344,355
press                                                                           -(R)  226

%M0072
 0224

Pulse                                                                          << RUNG 226  STEP #1088 >>
Alarm
Reset
 S03H_
%T0004                                                                  %M0033
 0363                                                                   (R)    (* Alarm air press                   *)
                                                                                Cross reference for %M0033
                                                                                -] [- 38,227
                                                                                -]/[- 81,85,227,344,355
                                                                                -(S)  225

Air     Alarm   Check                                                          << RUNG 227  STEP #1090 >>
press   air     no air
switch  press   press   Step 0
 B100                   STEP_0                                          H009
%I0004  %M0033  %M0072  %M0100                                          %M0154
         0226    0224    0022                                           ( )    (* Alarm air press LED               *)
                                                                                Cross reference for H009
Alarm                                                                           -] [- 38
air                                                                             -]/[- 225,350,356
press   Flash                                                                   FBIO  (370)
         FLASH
%M0033  %M0003
 0226    0014
```

```
06-16-03  10:35                    GE FANUC SERIES 90-30/90-20/MICRO (v9.02)                    Page    52
                                        Tetra Cap Applicator 47 -0100
                                   48463-0001 ELD 001 AD 030612 JNT ECM:135545

|        Alarm                                                          << RUNG 228  STEP #1098 >>
|        lubri-
| Lubric cation
| fault  LED
|         H010
| %M0073 %M0155                                          %M0034
|──┤ ├────┤/├──────────────────────────────────────────────(S)──  (* Alarm lubri- cation              *)
|  0199   0230                                                     Cross reference for %M0034
|                                                                  -] [- 230
|                                                                  -]/[- 230,340,344
|                                                                  -(R)  229
|
| Pulse                                                                 << RUNG 229  STEP #1101 >>
| Alarm
| Reset
|  S03H_
| %T0004                                                 %M0034
|──┤ ├──────────────────────────────────────────────────────(R)──  (* Alarm lubri- cation              *)
|  0363  │                                                         Cross reference for %M0034
|        │                                                         -] [- 230
| Lubric │                                                         -]/[- 230,340,344
| fault  │                                                         -(S)  228
|        │
| %M0073 │
|──┤/├──┘
|  0199
|
| Alarm                                                                 << RUNG 230  STEP #1104 >>
| lubri-  Lubric
| cation  fault   Step 0
|                 STEP_0                                  H010
| %M0034  %M0073  %M0100                                 %M0155
|──┤/├────┤ ├──┬──┤ ├──────────────────────────────────────( )──  (* Alarm lubri- cation LED          *)
|  0229    0199   │ 0022                                           Cross reference for H010
|                 │                                                -]/[- 228,342,350
| Alarm           │                                                FBIO  (370)
| lubri-          │
| cation  Flash   │
|          FLASH  │
| %M0034  %M0003  │
|──┤ ├────┤ ├──┘
|  0229    0014
|
|  >>>>
```

```
06-16-03  10:35                    GE FANUC SERIES 90-30/90-20/MICRO (v9.02)                    Page    53
                                        Tetra Cap Applicator 47 -0100
                                   48463-0001 ELD 001 AD 030612 JNT ECM:135545

Electri Electri                                                          << RUNG 235  STEP #1121 >>
cal     cal
alarm   alarm   Step 0
                STEP_0                                          H012
%M0069  %M0044  %M0100                                          %M0170
──┤ ├──────┤/├──┤ ├──────────────────────────────────────────────( )──  (* Alarm electrical cabinet         *)
 0232    0234    0022                                                    Cross reference for H012
                                                                         -]/[- 233,342
Electri                                                                  FBIO  (370),(371)
cal
alarm   Flash
         FLASH
%M0044  %M0003
──┤ ├──────┤ ├──┘
 0234    0014

        Freque.                                                          << RUNG 236  STEP #1128 >>
        convert
Check   appli-
K002    cator
  K02    K002
%I0011  %Q0018                                                  %M0088
──┤ ├──────┤/├──────────┬──┤ TMR ├──────────────────────────────( )──  (* Check K002                        *)
         0088           │  0.10s │                                      Cross reference for %M0088
        Freque.         │        │                                      -] [- 236,238,240
        convert         │        │                                      -]/[- 24,355,356
Check   appli-          │        │
K002    cator           │        │
  K02    K002           │        │
%I0011  %Q0018          │        │
──┤/├──────┤ ├──────┬──┴──────┬─┴─┘
         0088         │ CONST ─┤ PV │
                      │ +00003 │    │
        Pulse         │        │    │
Check   Alarm         │        │    │
K002    Reset         │        │    │
         S03H_        │        │    │
%M0088  %T0004        │        │    │
──┤ ├──────┤/├──────┘        │    │
 0236    0363                 Check  │
                              K002   │
                              %R0439 │

        Freque.                                                          << RUNG 237  STEP #1138 >>
        convert
Check   in-
K003    feeder
  K03    K003
%I0064  %Q0012                                                  %M0082
──┤ ├──────┤/├──────────┬──┤ TMR ├──────────────────────────────( )──  (* Check K003                        *)
         0089           │  0.10s │                                      Cross reference for %M0082
        Freque.         │        │                                      -] [- 237,238,240
        convert         │        │                                      -]/[- 24,355,356
Check   in-             │        │
K003    feeder          │        │
  K03    K003           │        │
%I0064  %Q0012          │        │
──┤/├──────┤ ├──────┬──┴──────┬─┴─┘
         0089         │ CONST ─┤ PV │
                      │ +00005 │    │
        Pulse         │        │    │
Check   Alarm         │        │    │
K003    Reset         │        │    │
         S03H_        │        │    │
%M0082  %T0004        │        │    │
──┤ ├──────┤/├──────┘        │    │
 0237    0363                 Check  │
                              K003   │
                              %R0440 │
```

EM1.1TH900627en.fm

```
06-16-03  10:35                    GE FANUC SERIES 90-30/90-20/MICRO (v9.02)                    Page    54
                                        Tetra Cap Applicator 47 -0100
                                   48463-0001 ELD 001 AD 030612 JNT ECM:135545

                                                                                << RUNG 238  STEP #1148 >>
                                   Door
No                                 applica
freq.                   Door       tor
alarm   Inching         applica    circuit
G010_MB  S05H   ALW_OFF  tor        L13
%I0045  %I0008  %S0008  %I0013     %I0014                          %M0036
──┤/├────┤ ├────┤/├────┤ ├────┤ ├──┤ TMR ├──────────────────────(SM)─  (* Alarm freque convert          *)
                                    0.10s                                Cross reference for %M0036
        Check                                                            -] [- 38,240
        air                                                              -]/[- 23,240,344
        press                                                            -(RM) 239
        Step up

        %M0070
        ──┤ ├──
         0222                       CONST ─PV
                                    +00002

Check                               Timer
K002                                frq
                                    alarm
%M0088                              %R0055
──┤ ├──────────
 0236

Check
K003

%M0082
──┤ ├──────────
 0237

Pulse                                                                           << RUNG 239  STEP #1159 >>
Alarm
Reset
 S03H_
%T0004                                                          %M0036
──┤ ├──────────────────────────────────────────────────────────(RM)─  (* Alarm freque convert          *)
 0363                                                                   Cross reference for %M0036
                                                                        -] [- 38,240
                                                                        -]/[- 23,240,344
                                                                        -(SM) 238

                                                                        << RUNG 240  STEP #1161 >>
No      Alarm
freq.   freque
alarm   convert Step 0
G010_MB         STEP_0                                           H013
%I0045  %M0036  %M0100                                          %M0169
──┤/├────┤/├────┤ ├──────────────────────────────────────────( )──  (* Alarm freque convert          *)
         0239   0022                                                    Cross reference for H013
                                                                        -]/[- 350,356
Check                                                                   FBIO  (370),371
K002

%M0088
──┤ ├──
 0236

Check
K003

%M0082
──┤ ├──
 0237

Alarm
freque
convert Flash
         FLASH
%M0036  %M0003
──┤ ├────┤ ├──
 0239    0014

        Alarm                                                           << RUNG 241  STEP #1170 >>
Alarm   clutch
angle   main
encoder motor
         H011
%M0710  %M0156                                                  %M0041
──┤ ├────┤/├──────────────────────────────────────────────────(SM)─  (* Alarm clutch main motor      *)
         0243                                                           Cross reference for %M0041
                                                                        -] [- 243
                                                                        -]/[- 45,83,243,347
                                                                        -(RM) 242

Program: D484631                    C:\LM90\TCAP47\D484631                          Block: _MAIN
```

EM1.1TH900627en.fm

```
06-16-03  10:35                    GE FANUC SERIES 90-30/90-20/MICRO (v9.02)                    Page    55
                                        Tetra Cap Applicator 47 -0100
                                   48463-0001 ELD 001 AD 030612 JNT ECM:135545

Pulse                                                                  << RUNG 242  STEP #1173 >>
Alarm
Reset
 S03H_
%T0004                                                   %M0041
──┤ ├──────────────────────────────────────────────────────(RM)─  (* Alarm clutch main motor          *)
 0363                                                                Cross reference for %M0041
                                                                     -] [- 243
                                                                     -]/[- 45,83,243,347
                                                                     -(SM) 241

Alarm                                                                << RUNG 243  STEP #1175 >>
clutch
main
motor   Flash   Step 0
         FLASH  STEP_0                                     H011
%M0041  %M0003  %M0100                                    %M0156
──┤ ├────┤ ├────┤ ├──────────────────────────────────────────( )──  (* Alarm clutch main motor          *)
 0242    0014    0022                                                Cross reference for H011
Alarm                                                                -]/[- 241,352
clutch  Alarm                                                        FBIO  (370)
main    angle
motor   encoder

%M0041  %M0710
──┤/├────┤ ├──┘
 0242

Lower   Upper                                                        << RUNG 244  STEP #1182 >>
infeed  infeed  Step 1
 B903    B904   STEP_1
%I0025  %I0026  %M0101                                    %M0820
──┤ ├────┤/├────┤ ├──────┬──────┬──────────────────────────( )──  (* Alarm fallen package           *)
                 0028     │ TMR  │                                  Cross reference for %M0820
                          │0.01s │                                  -] [- 72,244,245,247
Alarm   Pulse             │      │                                  -]/[- 120,122,178,187
fallen  Alarm             │      │
package Reset             │      │
         S03H_            │      │
%M0820  %T0004            │      │
──┤ ├────┤/├──────────────┘ CONST ─PV│
 0244    0363             +00030  │
                                  │
                                  │
                                
```

```
06-16-03  10:35                    GE FANUC SERIES 90-30/90-20/MICRO (v9.02)                    Page    56
                                        Tetra Cap Applicator 47 -0100
                                   48463-0001 ELD 001 AD 030612 JNT ECM:135545

Been in          Switch                                                    << RUNG 248  STEP #1203 >>
Step 3  Queue    in
not     outfeed  right
below 2 left     line
         B905     B916
%M0107  %I0038   %I0059
──┤ ├────┤ ├────┤/├──────────────┬──────────────┬──────────────<+>
 0025                            │ OFDT         │ TMR
                                 │ 0.01s        │ 0.10s
                     Switch      │              │
        Queue        in          │              │
        outfeed      right       │              │
        right        line        │              │
         B917         B916        │              │
        %I0060       %I0059       │              │
        ──┤ ├──────────┤ ├────┘  CONST ─ PV     CONST ─ PV
                                  +00005         +00005
                     Queue
        B917         outfeed
        connect      left                Alarm          Alarm
                      B905               queue          queue
        %M0784       %I0038              outfeed        outfeed
        ──┤/├────┤ ├────┘
                                         %R0082         %R0088

                                                                   %M0825   << RUNG 249  STEP #1216 >>
<+>──────┬OFDT──────────────────────────────────────────────────────( )──  (* Alarm queue outfeed              *)
         │0.10s                                                              Cross reference for %M0825
CONST ─ PV                                                                   -] [- 250,252
+00015                                                                       -]/[- 45,120,178,187,251,342,343

        Alarm
        queue
        outfeed

        %R0146

        Alarm                                                              << RUNG 250  STEP #1219 >>
Alarm   queue
queue   outfeed
outfeed LED
         H015
%M0825  %M0133                                                     %M0038
──┤ ├────┤/├──────────────────────────────────────────────────────(S)──  (* Alarm queue outfeed              *)
 0249    0252                                                              Cross reference for %M0038
                                                                           -] [- 77,252
                                                                           -]/[- 75,252,341,349
                                                                           -(R)  251

Pulse                                                                      << RUNG 251  STEP #1222 >>
Alarm
Reset
 S03H_
%T0004                                                             %M0038
──┤ ├──────────────────────────────────────────────────────────────(R)──  (* Alarm queue outfeed              *)
 0363                                                                      Cross reference for %M0038
                                                                           -] [- 77,252
Alarm                                                                      -]/[- 75,252,341,349
queue                                                                      -(S)  250
outfeed

%M0825
──┤/├──┘
 0249

Alarm   Alarm                                                              << RUNG 252  STEP #1225 >>
queue   queue
outfeed outfeed Step 0
                STEP_0                                              H015
%M0038  %M0825  %M0100                                             %M0133
──┤/├────┤ ├────┤ ├──────────────────────────────────────────────( )──  (* Alarm queue outfeed LED          *)
 0251    0249    0022                                                      Cross reference for H015
                                                                           -] [- 77
Alarm                                                                      -]/[- 75,250,342,354
queue                                                                      FBIO  (369)
outfeed Flash
         FLASH
%M0038  %M0003
──┤ ├────┤ ├──┘
 0251    0014

        Alarm                                                              << RUNG 253  STEP #1232 >>
Hotmelt hotmelt
unit    unit    With
ready   LED     Cap     Step 2
         H016           STEP_2
%I0044  %M0134  %M0210  %M0102                                     %M0039
──┤/├────┤/├────┤ ├────┤ ├──────────────────────────────────────────(S)──  (* Alarm low hotmelt temp           *)
         0255    0052    0030                                              Cross reference for %M0039
                                                                           -] [- 255
                                                                           -]/[- 33,41,177,255,344
                                                                           -(R)  254

Program: D484631                          C:\LM90\TCAP47\D484631                                Block: _MAIN
```

EM1.1TH900627en.fm

```
06-16-03  10:35                    GE FANUC SERIES 90-30/90-20/MICRO (v9.02)                    Page    57
                                        Tetra Cap Applicator 47 -0100
                                   48463-0001 ELD 001 AD 030612 JNT ECM:135545

Pulse                                                                   << RUNG 254  STEP #1237 >>
Alarm
Reset
 S03H_
%T0004                                                   %M0039
──┤ ├──────────────────────────────────────────────────────(R)──  (* Alarm low hotmelt temp          *)
 0363                                                                Cross reference for %M0039
                                                                     -] [- 255
With                                                                 -]/[- 33,41,177,255,344
Cap                                                                  -(S)  253
%M0210
──┤/├──
 0052

        Alarm                                                           << RUNG 255  STEP #1240 >>
Hotmelt low
unit    hotmelt         With
ready   temp    Step 1  Cap     Step 0
                STEP_1          STEP_0                    H016
%I0044  %M0039  %M0101  %M0210  %M0100                    %M0134
──┤/├────┤/├────┤ ├────┤ ├────┤ ├──────────────────────────( )──  (* Alarm hotmelt unit LED          *)
         0254    0028    0052    0022                               Cross reference for H016
Alarm                                                                -]/[- 40,253,350
low                                                                  FBIO  (369)
hotmelt
temp    Flash
         FLASH
%M0039  %M0003
──┤ ├────┤ ├──────────────────────
 0254    0014

                        Package                                         << RUNG 256  STEP #1249 >>
        Start           at belt
Infeed  belt    Lower   brake
conv    brake   infeed  disch
 K001   G005_SF B903    B104
%Q0017  %Q0021  %I0025  %I0027                            %M0826
──┤ ├────┤ ├────┤ ├────┤/├──────┬──────────────────────────( )──  (* AlarmNo package to infeed       *)
 0071    0134                    │ TMR                              Cross reference for %M0826
AlarmNo                          │ 0.10s                            -] [- 256,258
package                          │
to      Pulse                    │
infeed  Alarm                    │
         Reset                   │
         S03H_                   │
%M0826  %T0004                   │
──┤ ├────┤/├──────────────────────┼─ CONST ─ PV
 0256    0363                    │  +00050
Alarm                            │
no pack                          │  No
from                             │  package
infeed                           │  to
                                 │  infeed
%M0621                           │
──┤ ├──────────────────────────────%R0091
 0182

        Ext                                                             << RUNG 257  STEP #1259 >>
        hose
Infeed  brake   Lower
conv    sensor1 infeed
 K001    B901    B903
%Q0017  %I0015  %I0025                                    %M0822
──┤ ├────┤ ├────┤ ├────┤/├──────┬──────────────────────────( )──  (* AlarmNo package to infeed       *)
 0071                            │ TMR                              Cross reference for %M0822
        Ext                      │ 0.10s                            -] [- 257,258
        hose                     │
        brake                    │
        sensor2                  │
         B902                    │
        %I0016                   │
        ──┤ ├──                  │
                                 │ CONST ─ PV
                                 │ +00050
AlarmNo                          │
package Pulse                    │  AlarmNo
to      Alarm                    │  package
infeed   Reset                   │  to
         S03H_                   │  infeed
%M0822  %T0004                   │
──┤ ├────┤/├──────────────────────%R0121
 0257    0363
```

```
06-16-03  10:35                    GE FANUC SERIES 90-30/90-20/MICRO (v9.02)                    Page    58
                                        Tetra Cap Applicator 47 -0100
                                   48463-0001 ELD 001 AD 030612 JNT ECM:135545

AlarmNo                                                                << RUNG 258  STEP #1269 >>
package
to
infeed

%M0826                                                      %M0821
──┤ ├──────────────────────────────────────────────────────────( )──  (* AlarmNo package to infeed        *)
 0256                                                                  Cross reference for %M0821
AlarmNo                                                                -] [- 72,77,133,259,261
package                                                                -]/[- 33,40,76,179
to
infeed

%M0822
──┤ ├──
 0257

AlarmNo         Alarm                                                  << RUNG 259  STEP #1272 >>
package         no pack
to              to
infeed  Step 0  infeed
        STEP_0   H017
%M0821  %M0100  %M0135                                      %M0040
──┤ ├────┤ ├────┤/├──────────────────────────────────────────(S)──  (* AlarmNo package to infeed        *)
 0258    0022    0261                                                  Cross reference for %M0040
                                                                       -] [- 173,206,261
                                                                       -]/[- 261,344
                                                                       -(R)  260

Pulse                                                                  << RUNG 260  STEP #1276 >>
Alarm
Reset
 S03H_
%T0004                                                      %M0040
──┤ ├──────────────────────────────────────────────────────────(R)──  (* AlarmNo package to infeed        *)
 0363                                                                  Cross reference for %M0040
                                                                       -] [- 173,206,261
                                                                       -]/[- 261,344
                                                                       -(S)  259

AlarmNo AlarmNo                                                        << RUNG 261  STEP #1278 >>
package package
to      to
infeed  infeed  Step 0
                STEP_0                                       H017
%M0040  %M0821  %M0100                                      %M0135
──┤/├────┤ ├────┤ ├──────────────────────────────────────────( )──  (* Alarm no pack to infeed          *)
 0260    0258    0022                                                  Cross reference for H017
AlarmNo                                                                -]/[- 259,350
package                                                                FBIO  (369)
to
infeed  Flash
         FLASH
%M0040  %M0003
──┤ ├────┤ ├──
 0260    0014

                Alarm                                                  << RUNG 262  STEP #1285 >>
Index           index
out of          out of
pos.    Step 1  pos.
        STEP_1   H018
%M0615  %M0101  %M0136                                      %M0045
──┤ ├────┤ ├────┤/├──────────────────────────────────────────(S)──  (* Alarm index out of pos.          *)
 0175    0028    0264                                                  Cross reference for %M0045
                                                                       -] [- 264
                                                                       -]/[- 264,347
                                                                       -(R)  263

Pulse                                                                  << RUNG 263  STEP #1289 >>
Alarm
Reset
 S03H_
%T0004                                                      %M0045
──┤ ├──────────────────────────────────────────────────────────(R)──  (* Alarm index out of pos.          *)
 0363                                                                  Cross reference for %M0045
                                                                       -] [- 264
                                                                       -]/[- 264,347
                                                                       -(S)  262

Program: D484631                   C:\LM90\TCAP47\D484631                                   Block: _MAIN
```

EM1.1TH900627en.fm

```
06-16-03  10:35                    GE FANUC SERIES 90-30/90-20/MICRO (v9.02)                    Page    59
                                        Tetra Cap Applicator 47 -0100
                                   48463-0001 ELD 001 AD 030612 JNT ECM:135545

Alarm                                                                          << RUNG 264  STEP #1291 >>
index   Index
out of  out of
pos.    pos.    Step 0
                STEP_0                                          H018
%M0045  %M0615  %M0100                                         %M0136
──┤/├──────┤ ├──────┤ ├──────────────────────────────────────────( )──  (* Alarm index out of pos.          *)
 0263    0175    0022                                                   Cross reference for H018
Alarm                                                                   -]/[- 262,352
index                                                                   FBIO  (369)
out of
pos.    Flash
         FLASH
%M0045  %M0003
──┤ ├──────┤ ├──┐
 0263    0014

Outfeed Infeed                                                         << RUNG 265  STEP #1298 >>
jammed  conv
 B121    K001
%I0033  %Q0017                                                         %M0870
──┤ ├──────┤ ├──────┬──────┤ TMR ├──────────────────────────────────( )──  (* Jammed outfeed                   *)
         0071       │      0.01s                                             Cross reference for %M0870
                    │                                                        -] [- 265,266,267,269
        Pulse       │                                                        -]/[- 37,45
Jammed  Alarm       │
outfeed Reset       │
         S03H_      │
%M0870  %T0004      │
──┤ ├──────┤/├──┐   │ CONST ─ PV
 0265    0363    │   │ +00050
                 │   │
                 │   │
                 │   │
```

```
06-16-03  10:35                    GE FANUC SERIES 90-30/90-20/MICRO (v9.02)                    Page    60
                                        Tetra Cap Applicator 47 -0100
                                   48463-0001 ELD 001 AD 030612 JNT ECM:135545

Low                                                                          << RUNG 270  STEP #1323 >>
level
paddle
elevat
 B198
%I0039                                                          %M0886
 ─┤ ├──┌──────┐──────────────────────────────────────────────────( )──  (* Low level paddle elevat          *)
        │ TMR  │                                                          Cross reference for %M0886
        │0.10s │                                                          -]/[- 271
 CONST ─│ PV   │
 +00010 └──────┘
        Low
        paddle
        elevat

        %R0475

        Low                   Pulse                                  << RUNG 271  STEP #1326 >>
        level                 empty-
        paddle  With    Pulse ing
Step 2  elevat  Cap     Step up on
STEP_2                   S01H_
%M0102  %M0886  %M0210  %T0003 %T0100                           %M0885
 ─┤ ├──┤/├──────┤ ├──────┤/├──────┤/├──┌──────┐──────────────────( )──  (* Low level paddle elevat          *)
 0030    0270    0052    0017   0150    │ TMR  │                          Cross reference for %M0885
                                        │0.10s │                          -] [- 272,274,276,277
                                CONST ─│ PV   │                          -]/[- 275,278
                                +00050 └──────┘
                                       Low
                                       level
                                       paddle
                                       elevat

                                       %R0472

        Low     Low     Cap                                            << RUNG 272  STEP #1333 >>
        level   level   conv
With    paddle  In-     max
Cap     elevat  feeder  queue
                 B199    B196
%M0210  %M0885  %I0040  %I0046                                  %M0887
 ─┤ ├──┤ ├──────┤ ├──────┤/├──┌──────┐──────────────────────────( )──  (* Low level paddle elevat          *)
 0052    0271                   │ TMR  │                                  Cross reference for %M0887
                                │0.10s │                                  -] [- 273,340,342
                        CONST ─│ PV   │                                  -]/[- 92,155,160,327,329,330,346,351
                        +00150 └──────┘
                               Low
                               level
                               paddle
                               elevat

                               %R0200

Low                                                                          << RUNG 273  STEP #1339 >>
level
paddle
elevat

%M0887                                                          %T0170
 ─┤ ├──────────────────────────────────────────────────────────(^)──  (* Pulse low lev elevat              *)
 0272                                                                    Cross reference for %T0170
                                                                         -] [- 274

Low     Alarm                                                        << RUNG 274  STEP #1341 >>
level   low lev
paddle  padElev
elevat  LED
         H024
%M0885  %M0140                                                  %M0047
 ─┤ ├──┤/├──────────────────────────────────────────────────────(S)──  (* Alarm low lev paddle elevat       *)
 0271    0276                                                            Cross reference for %M0047
        │                                                                -] [- 276
        │Pulse                                                           -]/[- 276,340,346
        │low lev                                                         -(R)  275
        │elevat
        │
        │%T0170
        └─┤ ├──
          0273
```

```
06-16-03  10:35                    GE FANUC SERIES 90-30/90-20/MICRO (v9.02)                    Page    61
                                        Tetra Cap Applicator 47 -0100
                                   48463-0001 ELD 001 AD 030612 JNT ECM:135545

Pulse                                                                   << RUNG 275  STEP #1346 >>
Alarm
Reset
 S03H_
%T0004                                                   %M0047
──┤ ├──────────────────────────────────────────────────────(R)──  (* Alarm low lev paddle elevat      *)
 0363                                                              Cross reference for %M0047
Low                                                                -] [- 276
level                                                              -]/[- 276,340,346
paddle                                                             -(S)  274
elevat

%M0885
──┤/├──
 0271

Alarm   Low                                                         << RUNG 276  STEP #1349 >>
low lev level
paddle  paddle
elevat  elevat  Step 0
                STEP_0                                    H024
%M0047  %M0885  %M0100                                   %M0140
──┤/├────┤ ├────┤ ├──────────────────────────────────────( )──  (* Alarm low lev padElev LED        *)
 0275    0271    0022                                              Cross reference for H024
Alarm                                                              -]/[- 274,342,351
low lev                                                            FBIO  (369)
paddle
elevat  Flash
         FLASH
%M0047  %M0003
──┤ ├────┤ ├──
 0275    0014

Low                                                                 << RUNG 277  STEP #1356 >>
level
paddle  Paddle
elevat  elevat
 B198    K020
%I0039  %Q0009                                           %M0880
──┤ ├────┤ ├──┌──────┐──────────────────────────────────( )──  (* No alarm empty PadElev            *)
         0155  ONDTR                                               Cross reference for %M0880
               0.10s                                               -] [- 278
Low
level
paddle
elevat

%M0885
──┤ ├──────────R
 0271

         CONST ─PV
         +00300
               └──────┘
               No
               alarm
               empty
               PadElev

               %R0469

        No      Low     Low                                         << RUNG 278  STEP #1361 >>
        alarm   level   level   In-     Pulse
        empty   paddle  In-     feeder  Alarm   With
Step 2  PadElev elevat  feeder  forward Reset   Cap
STEP_2                   B199   G010_SF  S03H_
%M0102  %M0880  %M0885  %I0040  %Q0010  %T0004  %M0210          %M0890
──┤ ├────┤ ├────┤/├────┤ ├────┤ ├────┤/├────┤ ├──┌──────┐──────( )──  (* Alarm low lev In- feeder         *)
 0030    0277    0271            0161    0363    0052  TMR          Cross reference for %M0890
Alarm                                                  0.10s        -] [- 278,279,281
low lev                                                             -]/[- 285,330
In-
feeder

%M0890
──┤ ├──────────────────────────────────────────────────
 0278                                          CONST ─PV
                                               +00160
                                                      └──────┘
                                                      Alarm
                                                      low
                                                      level
                                                      In-feed

                                                      %R0478

Program: D484631                          C:\LM90\TCAP47\D484631                          Block: _MAIN
```

EM1.1TH900627en.fm

```
06-16-03  10:35                    GE FANUC SERIES 90-30/90-20/MICRO (v9.02)                    Page    62
                                        Tetra Cap Applicator 47 -0100
                                   48463-0001 ELD 001 AD 030612 JNT ECM:135545

Alarm   Alarm                                                          << RUNG 279  STEP #1371 >>
low lev low lev
In-     In-feed
feeder  LED
         H025
%M0890  %M0141                                          %M0049
──┤ ├────┤/├──────────────────────────────────────────────(S)──  (* Alarm low level In-feed          *)
 0278    0281                                                      Cross reference for %M0049
                                                                   -] [- 281
                                                                   -]/[- 159,281,346
                                                                   -(R)  280

Pulse                                                              << RUNG 280  STEP #1374 >>
Alarm
Reset
 S03H_
%T0004                                                  %M0049
──┤ ├──────────────────────────────────────────────────(R)──  (* Alarm low level In-feed          *)
 0363                                                              Cross reference for %M0049
                                                                   -] [- 281
                                                                   -]/[- 159,281,346
                                                                   -(S)  279

Alarm   Alarm                                                      << RUNG 281  STEP #1376 >>
low     low lev
level   In-
In-feed feeder  Step 0
                STEP_0                                   H025
%M0049  %M0890  %M0100                                  %M0141
──┤/├────┤ ├────┤ ├──────────────────────────────────────( )──  (* Alarm low lev In-feed LED        *)
 0280    0278    0022                                              Cross reference for H025
Alarm                                                              -]/[- 279
low                                                                FBIO  (369)
level
In-feed Flash
         FLASH
%M0049  %M0003
──┤ ├────┤ ├──┘
 0280    0014

        Cap     Cap     Low     Low                                << RUNG 282  STEP #1383 >>
        conv    conv    level   level
Cap at  min     max     In-     paddle
index   queue   queue   feeder  elevat
 B193    B197    B196    B199    B198
%I0043  %I0047  %I0046  %I0040  %I0039                          %M0891
──┤/├────┤/├────┤/├────┤ ├────┤/├──────────────────────────────( )──  (* No caps in machine              *)
                                                                   Cross reference for %M0891
                                                                   -]/[- 283,284

Cap                                                                << RUNG 283  STEP #1389 >>
conv    No caps
max     in
queue   machine
 B196
%I0046  %M0891                                          %M0901
──┤ ├────┤/├──────────────────────────────────────────────( )──  (* Cap at max queue                 *)
         0282                                                      Cross reference for %M0901
                                                                   -] [- 283,284,330
Cap at
max
queue

%M0901
──┤ ├──┘
 0283

        Cap                                                        << RUNG 284  STEP #1393 >>
Cap at  conv    No caps
max     min     in
queue   queue   machine
         B197
%M0901  %I0047  %M0891                                  %M0902
──┤ ├────┤ ├────┤/├──────────────────────────────────────────( )──  (* Cap at min queue                 *)
 0283            0282                                              Cross reference for %M0902
                                                                   -] [- 284
Cap at
min
queue

%M0902
──┤ ├──────────┘
 0284

                Alarm   Empty-                                     << RUNG 285  STEP #1398 >>
                low lev ing     Cond
        With    In-     In-     main
Step 2  Cap     feeder  feeder  motor
STEP_2
%M0102  %M0210  %M0890  %M0540  %M0265                          %M0909
──┤ ├────┤ ├────┤/├────┤/├────┤ ├──────────────────────────────( )──  (* No cap at pusher                 *)
 0030    0052    0278    0152    0082                                Cross reference for %M0909
                                                                   -] [- 286

Program: D484631                          C:\LM90\TCAP47\D484631                          Block: _MAIN
```

EM1.1TH900627en.fm

```
06-16-03  10:35                    GE FANUC SERIES 90-30/90-20/MICRO (v9.02)                    Page    63
                                        Tetra Cap Applicator 47 -0100
                                   48463-0001 ELD 001 AD 030612 JNT ECM:135545

|        Check           Cap                                          << RUNG 286  STEP #1404 >>
|No cap  if cap          pusher
|at      missed  Cap at  front
|pusher  atindex index   pos
|         AV_7    B193    B192
|%M0909  %M0206  %I0043  %I0042                          %M0911
|──┤ ├────┤ ├────┤/├────┤ ├──────────────────────────────( )──  (* Check no cap at pusher          *)
|  0285                                                          Cross reference for %M0911
|                                                                -] [- 288
|                                                                -]/[- 287
|
|Check                                                           << RUNG 287  STEP #1409 >>
|no cap
|at
|pusher
|
|%M0911                                                  %M0912
|──┤/├──────────┌──────┐──────────────────────────────( )──  (* Check no cap at pusher          *)
|  0286         │ TMR  │                                        Cross reference for %M0912
|Check          │0.10s │                                        -] [- 288
|no cap         │      │                                        -]/[- 287,288
|at             │      │
|pusher         │      │
|               │      │
|%M0912         │      │
|──┤/├──────────┤      │
|  0287   CONST ─┤PV    │
|         +00600 │      │
|                └──────┘
|                Check
|                no cap
|                at
|                pusher
|
|                %R0271
|
|Check   Check                                                   << RUNG 288  STEP #1413 >>
|no cap  no cap
|at      at
|pusher  pusher
|
|%M0911  %M0912                                          %M0910
|──┤ ├────┤/├──────────┌──────┐──────────────────────────( )──  (* Alarm no cap at pusher         *)
|  0286   0287          │>UPCTR│                                 Cross reference for %M0910
|Check   Alarm          │      │                                 -] [- 289
|no cap  no cap         │      │                                 -]/[- 179,288,290
|at      at             │      │
|pusher  pusher         │      │
|                       │      │
|%M0912  %M0910         │      │
|──┤ ├────┤/├──────────┤R     │
|  0287   0288          │      │
|                       │      │
|Pulse                  │      │
|Alarm                  │      │
|Reset                  │      │
|S03H_                  │      │
|%T0004                 │      │
|──┤ ├──────────────────┤      │
|  0363           CONST ─┤PV    │
|                 +00003 │      │
|                        └──────┘
|                        Alarm
|                        no cap
|                        at
|                        pusher
|
|                        %R0100
|
|Alarm                                                           << RUNG 289  STEP #1420 >>
|no cap  AlarmNo
|at      cap at
|pusher  pusher
|         H026
|%M0910  %M0142                                          %M0056
|──┤ ├────┤/├──────────────────────────────────────────(S)──  (* Alarm no cap at pusher          *)
|  0288   0291                                                   Cross reference for %M0056
|                                                                -] [- 35,291
|                                                                -]/[- 345
|                                                                -(R)  290
|
|Pulse                                                           << RUNG 290  STEP #1423 >>
|Alarm
|Reset
|S03H_
|%T0004                                                  %M0056
|──┤ ├──────────────────────────────────────────────────(R)──  (* Alarm no cap at pusher          *)
|  0363                                                          Cross reference for %M0056
|Alarm                                                           -] [- 35,291
|no cap                                                          -]/[- 345
|at                                                              -(S)  289
|pusher  Step 3
|        STEP_3
|%M0910  %M0103
|──┤/├────┤ ├──┘
|  0288   0034

Program: D484631                   C:\LM90\TCAP47\D484631                                   Block: _MAIN
```

EM1.1TH900627en.fm

```
06-16-03  10:35                    GE FANUC SERIES 90-30/90-20/MICRO (v9.02)                    Page    64
                                        Tetra Cap Applicator 47 -0100
                                   48463-0001 ELD 001 AD 030612 JNT ECM:135545

Alarm                                                                   << RUNG 291  STEP #1428 >>
no cap
at
pusher  Flash   Step 0
         FLASH  STEP_0                                          H026
%M0056  %M0003  %M0100                                         %M0142
──┤ ├────┤ ├────┤ ├──────────────────────────────────────────────( )──  (* AlarmNo cap at pusher          *)
 0290    0014    0022                                                   Cross reference for H026
                                                                        -]/[- 289,351
                                                                        FBIO  (369)

Detect                                                                  << RUNG 292  STEP #1432 >>
of      Infeed  With
package conv    Cap
 B181    K001
%I0035  %Q0017  %M0210                                         %M0824
──┤ ├────┤ ├────┤ ├──┤ TMR ├──────────────────────────────────────( )──  (* Alarm queue cap detect          *)
         0071    0052   0.01s                                           Cross reference for %M0824
                                                                        -] [- 293,295
                 CONST ─┤PV │                                           -]/[- 33,40,45,120
                 +00100
                        └───┘

                        Alarm
                        cap
                        detect

                        %R0085

Alarm   Alarm   Alarm                                                   << RUNG 293  STEP #1437 >>
queue   CapMiss queue
cap     on pack cap
detect  LED     detect
         H027
%M0824  %M0143  %M0787                                         %M0050
──┤ ├────┤/├────┤ ├──────────────────────────────────────────────(S)──  (* Alarm queue cap detect          *)
 0292    0295                                                           Cross reference for %M0050
                                                                        -] [- 295
                                                                        -]/[- 295,346
                                                                        -(R)  294

Pulse                                                                   << RUNG 294  STEP #1441 >>
Alarm
Reset
 S03H_
%T0004                                                         %M0050
──┤ ├──────────────────────────────────────────────────────────────(R)──  (* Alarm queue cap detect          *)
 0363                                                                   Cross reference for %M0050
                                                                        -] [- 295
                                                                        -]/[- 295,346
                                                                        -(S)  293

Alarm   Alarm                                                           << RUNG 295  STEP #1443 >>
queue   queue
cap     cap
detect  detect  Step 0
                STEP_0                                          H027
%M0050  %M0824  %M0100                                         %M0143
──┤/├────┤ ├────┤ ├──────────────────────────────────────────────( )──  (* Alarm CapMiss on pack LED       *)
 0294    0292    0022                                                   Cross reference for H027
Alarm                                                                   -]/[- 293,351
queue                                                                   FBIO  (369)
cap
detect  Flash
         FLASH
%M0050  %M0003
──┤ ├────┤ ├──┤
 0294    0014
Alarm
missing
Cap on
package

%M0816
──┤ ├──┘

Program: D484631                    C:\LM90\TCAP47\D484631                                  Block: _MAIN
```

EM1.1TH900627en.fm

```
06-16-03  10:35                    GE FANUC SERIES 90-30/90-20/MICRO (v9.02)                    Page    65
                                        Tetra Cap Applicator 47 -0100
                                   48463-0001 ELD 001 AD 030612 JNT ECM:135545

                                                                                << RUNG 296  STEP #1451 >>
                                   Cap
                   Main    Pusher, pusher
         With      motor   cap to  rear
Step 2   Cap       speed 2 index   pos
STEP_2             G002_S1  Y160    B191
%M0102   %M0210    %Q0019  %Q0002  %I0041                          %M0913
 0030     0052      0087    0184    /                TMR                                ( )—   (* Alarm cap pusher return          *)
Alarm                                                0.01s                                      Cross reference for %M0913
cap      Pulse                                                                                  -] [- 296,298
pusher   Alarm
return   Reset
          S03H_
%M0913   %T0004
 0296     0363                                  CONST —PV
                                                +00040
                                                Alarm
                                                cap
                                                pusher
                                                return

                                                %R0410

                                   Cap                                          << RUNG 297  STEP #1461 >>
                   Main    Pusher, pusher
         With      motor   cap to  front
Step 2   Cap       speed 2 index   pos
STEP_2             G002_S1  Y160    B192
%M0102   %M0210    %Q0019  %Q0002  %I0042                          %M0914
 0030     0052      0087    0184    /                TMR                                ( )—   (* Alarm cap pusher forward         *)
Alarm                                                0.01s                                      Cross reference for %M0914
cap      Pulse                                                                                  -] [- 297,298
pusher   Alarm
forward  Reset
          S03H_
%M0914   %T0004
 0297     0363                                  CONST —PV
                                                +00040
                                                Alarm
                                                cap
                                                pusher
                                                forward

                                                %R0428

Alarm                                                                           << RUNG 298  STEP #1471 >>
cap
pusher
return

%M0913                                                                  %M0915
 0296                                                                          ( )—   (* Alarm cap pusher                 *)
Alarm                                                                              Cross reference for %M0915
cap                                                                                -] [- 299
pusher                                                                             -]/[- 37,81,85,184
forward

%M0914
 0297

         Alarm                                                                  << RUNG 299  STEP #1474 >>
Alarm    pusher
cap      cap to
pusher   index
          H028
%M0915   %M0144                                                         %M0054
 0298     0301                                                                 (S)—   (* Alarm cap pusher                 *)
                                                                                   Cross reference for %M0054
                                                                                   -] [- 301
                                                                                   -]/[- 345
                                                                                   -(R)  300

Pulse                                                                           << RUNG 300  STEP #1477 >>
Alarm
Reset
 S03H_
%T0004                                                                  %M0054
 0363                                                                         (R)—   (* Alarm cap pusher                 *)
                                                                                   Cross reference for %M0054
                                                                                   -] [- 301
                                                                                   -]/[- 345
                                                                                   -(S)  299

Program: D484631                   C:\LM90\TCAP47\D484631                                   Block: _MAIN
```

EM1.1TH900627en.fm

```
06-16-03  10:35                    GE FANUC SERIES 90-30/90-20/MICRO (v9.02)                    Page    66
                                        Tetra Cap Applicator 47 -0100
                                   48463-0001 ELD 001 AD 030612 JNT ECM:135545

Alarm                                                                   << RUNG 301  STEP #1479 >>
cap
pusher  Flash   Step 0
         FLASH  STEP_0                                          H028
%M0054  %M0003  %M0100                                         %M0144
──┤ ├──────┤ ├──────┤ ├──────────────────────────────────────────( )──  (* Alarm pusher cap to index        *)
 0300    0014    0022                                                   Cross reference for H028
                                                                        -]/[- 299,351
                                                                        FBIO  (369)

        Not                                                             << RUNG 302  STEP #1483 >>
        ready
Run     down
enable  stream
         H029
%M0500  %M0157                                                 %M0060
──┤/├──────┤/├──────────────────────────────────────────────────(S)──  (* Not ready down stream            *)
 0189    0304                                                           Cross reference for %M0060
                                                                        -] [- 304
                                                                        -]/[- 304,341,349
                                                                        -(R)  303

Pulse                                                                   << RUNG 303  STEP #1486 >>
Alarm
Reset
 S03H_
%T0004                                                         %M0060
──┤ ├──────────────────────────────────────────────────────────(R)──  (* Not ready down stream            *)
 0363                                                                   Cross reference for %M0060
                                                                        -] [- 304
Run                                                                     -]/[- 304,341,349
enable                                                                  -(S)  302

%M0500
──┤ ├──
 0189

Not                                                                     << RUNG 304  STEP #1489 >>
ready
down    Run
stream  enable  Step 0
                STEP_0                                          H029
%M0060  %M0500  %M0100                                         %M0157
──┤/├──────┤/├──────┤ ├──────────────────────────────────────────( )──  (* Not ready down stream            *)
 0303    0189    0022                                                   Cross reference for H029
Not                                                                     -]/[- 302,354
ready                                                                   FBIO  (370)
down
stream  Flash
         FLASH
%M0060  %M0003
──┤ ├──────┤ ├──
 0303    0014

                        Doors                                           << RUNG 305  STEP #1496 >>
                Doors   in-
        Em stop in-     feeder
Em stop circuit feeder  circuit
  L12            L14
%I0001  %I0002  %I0031  %I0032                                 %M0084
──┤ ├──────┤ ├──────┤/├──────┤ ├──┌──────────────────────────────( )──  (* Alarm doors In- feeder          *)
                                   │ TMR                                  Cross reference for %M0084
                                   │ 0.10s                                -]/[- 330
                                   │
                         CONST ────│PV
                         +00002    │
                                   └──────────────────────────────
                                 Alarm
                                 doors
                                 In-
                                 feeder

                                 %R0097

In-                                                                     << RUNG 306  STEP #1502 >>
feeder
Restart
 S115                                                           S115_
%I0012                                                         %T0090
──┤ ├──────────────────────────────────────────────────────────(^)──  (* In- feeder restart               *)
                                                                        Cross reference for S115_
                                                                        -] [- 309,336

Program: D484631                   C:\LM90\TCAP47\D484631                                   Block: _MAIN
```

EM1.1TH900627en.fm

```
06-16-03  10:35                    GE FANUC SERIES 90-30/90-20/MICRO (v9.02)                    Page    67
                                        Tetra Cap Applicator 47 -0100
                                   48463-0001 ELD 001 AD 030612 JNT ECM:135545

|        Door                                                                  << RUNG 307  STEP #1504 >>
|Door    applica
|applica tor
|tor     circuit
|  L13
|%I0013  %I0014                                                   %M0083
|──┤ ├────┤ ├──┌──────┐──────────────────────────────────────────( )──  (* Memory timer doors                *)
|            │ TMR  │                                                      Cross reference for %M0083
|            │0.10s │                                                      -] [- 308,310
|            │      │
|     CONST ─│PV    │
|     +00002 │      │
|            └──────┘
|            Timer
|            alarm
|            doors
|            infeed
|
|            %R0052
|
|        Alarm                                                                 << RUNG 308  STEP #1508 >>
|Doors   door                          Memory
|in-     In-                       Em stop timer
|feeder  feeder  Step 0  Em stop circuit doors
|  L14    H030   STEP_0    L12
|%I0031  %M0158  %M0100  %I0001  %I0002  %M0083                   %M0035
|──┤/├────┤/├────┤ ├────┤ ├────┤ ├────┤ ├──────────────────────────(S)──  (* Alarm doors In- feeder            *)
|        0310    0022                    0307                              Cross reference for %M0035
|Doors                                                                     -] [- 310,357
|in-                                                                       -]/[- 155,159,310,359
|feeder                                                                    -(R)  309
|circuit
|
|%I0032
|──┤/├──
|
|In-                                                                           << RUNG 309  STEP #1516 >>
|feeder
|restart
| S115_
|%T0090                                                           %M0035
|──┤ ├──────────────────────────────────────────────────────────(R)──  (* Alarm doors In- feeder            *)
| 0306                                                                     Cross reference for %M0035
|                                                                          -] [- 310,357
|Pulse                                                                     -]/[- 155,159,310,359
|Alarm                                                                     -(S)  308
|Reset
| S03H_
|%T0004
|──┤ ├──
| 0363
|
|        Alarm                                                                 << RUNG 310  STEP #1519 >>
|Doors   doors                         Memory
|in-     In-                       Em stop timer
|feeder  feeder  Step 0  Em stop circuit doors
|  L14           STEP_0    L12                                        H030
|%I0031  %M0035  %M0100  %I0001  %I0002  %M0083                   %M0158
|──┤/├────┤/├────┤ ├────┤ ├────┤ ├────┤ ├──────────────────────────( )──  (* Alarm door In- feeder            *)
|        0309    0022                    0307                              Cross reference for H030
|Doors                                                                     -] [- 311,357,360
|in-                                                                       -]/[- 159,308,351
|feeder                                                                    FBIO  (370)
|circuit
|
|%I0032
|──┤/├──
|
|Alarm
|doors
|In-
|feeder  Flash
|         FLASH
|%M0035  %M0003
|──┤ ├────┤ ├──┘
| 0309    0014
|
|Alarm                                                                         << RUNG 311  STEP #1530 >>
|door
|In-
|feeder
| H030                                                             H115S
|%M0158                                                           %Q0045
|──┤ ├──────────────────────────────────────────────────────────( )──  (* Mech Feeder restart               *)
| 0310                                                                     Cross reference for H115S
|                                                                                NONE
|Lamp
|test
|
|%M0006
|──┤ ├──
| 0362

Program: D484631                    C:\LM90\TCAP47\D484631                                   Block: _MAIN
```

EM1.1TH900627en.fm

```
06-16-03  10:35                    GE FANUC SERIES 90-30/90-20/MICRO (v9.02)                    Page    68
                                        Tetra Cap Applicator 47 -0100
                                   48463-0001 ELD 001 AD 030612 JNT ECM:135545

|        Lead                                                          << RUNG 312  STEP #1533 >>
|        rail in
|        upper
| Step 1 pos
| STEP_1  B129
| %M0101 %I0030                                          %M0920
|--| |----|/|-------------------------------------------( )--  (* Alarm lead rail                  *)
| 0028   |                                                       Cross reference for %M0920
|        |Lead                                                   -] [- 313,315
| Alarm  |rail                                                   -]/[- 37,45,81,85,178
| lead   |lower
| rail   |pos
|        | B202
| %M0052 |%I0054
|--| |----|/|--|
| 0314

|        Alarm                                                         << RUNG 313  STEP #1539 >>
| Alarm  lead
| lead   rail
| rail   LED
|         H031
| %M0920 %M0159                                          %M0052
|--| |----|/|-------------------------------------------(S)--  (* Alarm lead rail                  *)
| 0312   0315                                                   Cross reference for %M0052
|                                                               -] [- 312,315
|                                                               -]/[- 315,345
|                                                               -(R)  314

| Pulse                                                                << RUNG 314  STEP #1542 >>
| Alarm
| Reset
| S03H_
| %T0004                                                 %M0052
|--| |-------------------------------------------------(R)--  (* Alarm lead rail                  *)
| 0363                                                          Cross reference for %M0052
|                                                               -] [- 312,315
|                                                               -]/[- 315,345
|                                                               -(S)  313

| Alarm  Alarm                                                         << RUNG 315  STEP #1544 >>
| lead   lead
| rail   rail    Step 0
|                STEP_0                                   H031
| %M0052 %M0920  %M0100                                  %M0159
|--|/|----| |----| |-----------------------------------( )--  (* Alarm lead rail LED             *)
| 0314   0312    0022                                           Cross reference for H031
|                                                               -]/[- 313,351
| Alarm                                                         FBIO  (370)
| lead
| rail   Flash
|         FLASH
| %M0052 %M0003
|--| |----| |--|
| 0314   0014

| Cap on                                                               << RUNG 316  STEP #1551 >>
| carrier Door
| before  applica
| index   tor
| B189     L13
| %I0029 %I0013                                          %M0270
|--|/|----| |-----------------------------------------( )--  (* Cap on carrier before index      *)
| Cap on |                                                      Cross reference for %M0270
| carrier|                                                      -] [- 316,317,319
| before |                                                      -]/[- 37,45,75,81,85,177
| index  |
| %M0270 |
|--| |--|
| 0316

| Cap on Alarm                                                         << RUNG 317  STEP #1555 >>
| carrier cap on
| before  carrier
| index   BeforeI
|          H032
| %M0270 %M0160                                          %M0043
|--| |----|/|-------------------------------------------(S)--  (* Alarm  cap on carrierBeforeIndex *)
| 0316   0319                                                   Cross reference for %M0043
|                                                               -] [- 319
|                                                               -]/[- 319,345
|                                                               -(R)  318

Program: D484631                    C:\LM90\TCAP47\D484631                    Block: _MAIN
```

EM1.1TH900627en.fm

```
06-16-03  10:35                    GE FANUC SERIES 90-30/90-20/MICRO (v9.02)                    Page    69
                                        Tetra Cap Applicator 47 -0100
                                   48463-0001 ELD 001 AD 030612 JNT ECM:135545

Pulse                                                                          << RUNG 318  STEP #1558 >>
Alarm
Reset
 S03H_
%T0004                                                   %M0043
──┤ ├──────────────────────────────────────────────────────(R)──  (* Alarm  cap on carrierBeforeIndex *)
 0363                                                                Cross reference for %M0043
                                                                     -] [- 319
                                                                     -]/[- 319,345
                                                                     -(S)  317

Cap on  Alarm                                                          << RUNG 319  STEP #1560 >>
carrier cap on
before  carrier
index   BeforeI Step 0
                STEP_0                                    H032
%M0270  %M0043  %M0100                                   %M0160
──┤ ├────┤/├──┬──┤ ├──────────────────────────────────────( )──  (* Alarm  cap on carrierBeforeIndex *)
 0316    0318  │  0022                                            Cross reference for H032
        Alarm  │                                                  -]/[- 317,352
        cap on │                                                  FBIO  (370)
        carrier│
Flash   BeforeI│
 FLASH         │
%M0003  %M0043 │
──┤ ├────┤ ├──┘
 0014    0318

Rotate                                                                 << RUNG 320  STEP #1567 >>
guard
In-
feeder
 B201
%I0051                                                   %T0095
──┤ ├──────────────────────────────────────────────────────(^)──  (* Rotate guard In-feed            *)
                                                                     Cross reference for %T0095
                                                                     -]/[- 154,322

Start                                                                  << RUNG 321  STEP #1569 >>
In-
feeder

%M0550                                                   %M0557
──┤ ├──┌──────┐──────────────────────────────────────────( )──  (* Delay alarm start In-feed       *)
 0160  │ TMR  │                                                    Cross reference for %M0557
       │0.10s │                                                    -] [- 322
 CONST─│PV    │
 +00050└──────┘
        Delay
        alarm
        start
        In-feed

        %R0133

Delay                                                                  << RUNG 322  STEP #1572 >>
alarm   Rotate  Doors
start   guard   in-
In-feed In-feed feeder
                  L14
%M0557  %T0095  %I0031                                   %M0925
──┤ ├────┤/├──┬──┤ ├──┌──────┐──────────────────────────( )──  (* Alarm no rotate In-feed         *)
 0321    0320  │       │ TMR  │                                   Cross reference for %M0925
Alarm          │       │0.10s │                                   -] [- 154,156,322,323,325
no             │       │      │                                   -]/[- 161,167
rotate         │       │      │
In-feed        │       │      │
               │       │      │
%M0925         │       │      │
──┤ ├──────────┘  CONST─│PV    │
 0322             +00045└──────┘
                        Alarm
                        no
                        rotate
                        In-feed

                        %R0112

Alarm   AlarmNo                                                        << RUNG 323  STEP #1578 >>
no      rotate
rotate  In-feed
In-feed Led
         H033
%M0925  %M0161                                           %M0057
──┤ ├────┤/├──────────────────────────────────────────────(S)──  (* Alarm no rotate In-feed         *)
 0322    0325                                                        Cross reference for %M0057
                                                                     -] [- 325
                                                                     -]/[- 325,345
                                                                     -(R)  324

Program: D484631                   C:\LM90\TCAP47\D484631                                   Block: _MAIN
```

EM1.1TH900627en.fm

```
06-16-03  10:35                    GE FANUC SERIES 90-30/90-20/MICRO (v9.02)                    Page    70
                                        Tetra Cap Applicator 47 -0100
                                   48463-0001 ELD 001 AD 030612 JNT ECM:135545

Pulse                                                                   << RUNG 324  STEP #1581 >>
Alarm
Reset
 S03H_
%T0004                                                   %M0057
──┤ ├──────────────────────────────────────────────────────(R)──  (* Alarm no rotate In-feed          *)
 0363 │                                                            Cross reference for %M0057
      │                                                            -] [- 325
Doors │                                                            -]/[- 325,345
in-   │                                                            -(S)  323
feeder│
  L14 │
%I0031│
──┤/├─┘

Alarm   Alarm                                                           << RUNG 325  STEP #1584 >>
no      no
rotate  rotate
In-feed In-feed Step 0
                STEP_0                                    H033
%M0057  %M0925  %M0100                                   %M0161
──┤/├────┤ ├───┬┤ ├──────────────────────────────────────( )──  (* AlarmNo rotate In-feed Led      *)
 0324    0322   │ 0022                                            Cross reference for H033
Alarm           │                                                 -]/[- 323,352
no              │                                                 FBIO  (370)
rotate          │
In-feed Flash   │
         FLASH  │
%M0057  %M0003  │
──┤ ├────┤ ├───┘
 0324    0014

Low                                                                     << RUNG 326  STEP #1591 >>
level
In-
feeder
 B199                                                     B199_
%I0040                                                   %T0071
──┤/├──────────────────────────────────────────────────────(v)──  (* Pulse cap in In- feeder         *)
                                                                    Cross reference for B199_
                                                                    -] [- 327

Pulse   Low                                                             << RUNG 327  STEP #1593 >>
cap in  level
In-     paddle
feeder  elevat
 B199_
%T0071  %M0887                                           %M0932
──┤ ├────┤/├──────────────────────────────────────────────( )──  (* Cap in In- feeder               *)
 0326   0272                                                        Cross reference for %M0932
        │                                                           -] [- 327,328
Cap in  │
In-     │
feeder  │
        │
%M0932  │
──┤ ├───┘
 0327

        Cap                                                             << RUNG 328  STEP #1597 >>
Cap in  conv
In-     max
feeder  queue
         B196                                             B196_
%M0932  %I0046                                           %T0070
──┤ ├────┤ ├──────────────────────────────────────────────(^)──  (* Pulse max queue                 *)
 0327                                                               Cross reference for B196_
                                                                    -] [- 329
                                                                    -]/[- 330

        Low                                                             << RUNG 329  STEP #1600 >>
Pulse   level
max     paddle
queue   elevat
 B196_
%T0070  %M0887                                           %M0931
──┤ ├────┤/├──────────────────────────────────────────────( )──  (* Cap to max queue                *)
 0328   0272                                                        Cross reference for %M0931
        │                                                           -] [- 329,330
Cap to  │
max     │
queue   │
        │
%M0931  │
──┤ ├───┘
 0329

Program: D484631                    C:\LM90\TCAP47\D484631                    Block: _MAIN
```

EM1.1TH900627en.fm

```
06-16-03  10:35                    GE FANUC SERIES 90-30/90-20/MICRO (v9.02)                    Page    71
                                        Tetra Cap Applicator 47 -0100
                                   48463-0001 ELD 001 AD 030612 JNT ECM:135545

                Alarm   Alarm   Low     Cap                                     << RUNG 330  STEP #1604 >>
                doors   low lev level   conv    Cap at  Pulse   Cap to
        With    In-     In-     paddle  min     max     max     max
Step 2  Cap     feeder  feeder  elevat  queue   queue   queue   queue
STEP_2                                   B197            B196_
%M0102  %M0210  %M0084  %M0890  %M0887  %I0047  %M0901  %T0070  %M0931  %M0929
──┤ ├─────┤ ├─────┤/├─────┤/├─────┤/├─────┤ ├─────┤/├─────┤ ├─────( )──  (* Alarm no cap queue              *)
 0030    0052    0305    0278    0272            0283    0328    0329        Cross reference for %M0929
                                                                             -] [- 331

        Empty-                                                               << RUNG 331  STEP #1614 >>
Alarm   ing
no cap  In-
queue   feeder

%M0929  %M0540                                                      %M0930
──┤ ├─────┤/├──┌ TMR ┐──────────────────────────────────────────────( )──  (* Alarm no cap queue              *)
 0330    0152   │0.10s│                                                      Cross reference for %M0930
                │     │                                                      -] [- 332,334
         CONST ─│PV   │                                                      -]/[- 333
         +00070 └─────┘

                Alarm
                no cap
                queue

                %R0103

        Alarm                                                                << RUNG 332  STEP #1618 >>
Alarm   no cap
no cap  queue
queue   LED
         H034
%M0930  %M0162                                                      %M0058
──┤ ├─────┤/├──────────────────────────────────────────────────────(S)──  (* Alarm no cap queue              *)
 0331    0334                                                                Cross reference for %M0058
                                                                             -] [- 334
                                                                             -]/[- 92,334,346
                                                                             -(R)  333

Pulse                                                                        << RUNG 333  STEP #1621 >>
Alarm
Reset
 S03H_
%T0004                                                              %M0058
──┤ ├──┬──────────────────────────────────────────────────────────(R)──  (* Alarm no cap queue              *)
 0363   │                                                                    Cross reference for %M0058
        │                                                                    -] [- 334
Alarm   │                                                                    -]/[- 92,334,346
no cap  │                                                                    -(S)  332
queue   │
        │
%M0930  │
──┤/├──┘
 0331

Alarm   Alarm                                                                << RUNG 334  STEP #1624 >>
no cap  no cap
queue   queue   Step 0
                STEP_0                                               H034
%M0058  %M0930  %M0100                                              %M0162
──┤/├─────┤ ├──┬──┤ ├──────────────────────────────────────────────( )──  (* Alarm no cap queue LED          *)
 0333    0331   │ 0022                                                       Cross reference for H034
                │                                                            -]/[- 92,332,352
Alarm           │                                                            FBIO  (370)
no cap          │
queue   Flash   │
         FLASH  │
%M0058  %M0003  │
──┤ ├─────┤ ├──┘
 0333    0014

        Alarm                                                                << RUNG 335  STEP #1631 >>
Cap     cap
chute   chute
closed  openLED
 B200    H035
%I0050  %M0163                                                      %M0059
──┤/├─────┤/├──────────────────────────────────────────────────────(S)──  (* Alarm cap chute open            *)
         0337                                                                Cross reference for %M0059
                                                                             -] [- 337
                                                                             -]/[- 337,348
                                                                             -(R)  336
```

EM1.1TH900627en.fm

```
06-16-03  10:35                    GE FANUC SERIES 90-30/90-20/MICRO (v9.02)                    Page    72
                                        Tetra Cap Applicator 47 -0100
                                 48463-0001 ELD 001 AD 030612 JNT ECM:135545

Pulse                                                                          << RUNG 336  STEP #1634 >>
Alarm
Reset
 S03H_
%T0004                                                          %M0059
──┤ ├──────────────────────────────────────────────────────────(R)──  (* Alarm cap chute open            *)
 0363                                                                   Cross reference for %M0059
                                                                        -] [- 337
In-                                                                     -]/[- 337,348
feeder                                                                  -(S)  335
restart
 S115_
%T0090
──┤ ├──
 0306

Alarm                                                                          << RUNG 337  STEP #1637 >>
cap     Cap
chute   chute
open    closed  Step 0
         B200   STEP_0                                            H035
%M0059  %I0050  %M0100                                           %M0163
──┤/├────┤/├────┤ ├──────────────────────────────────────────────( )──  (* Alarm cap chute openLED         *)
 0336           0022                                                    Cross reference for H035
Alarm                                                                   -]/[- 335,353
cap                                                                     FBIO  (370)
chute
open    Flash
         FLASH
%M0059  %M0003
──┤ ├────┤ ├──
 0336    0014

Check   Preheat Current                                                        << RUNG 338  STEP #1644 >>
pre     nozzle  relay   With
heater  element connect Cap
A80_A81  K004
%I0056  %Q0020  %M0786  %M0210                                   %M0921
──┤ ├────┤ ├────┤ ├────┤ ├──┌─────┐──────────────────────────────( )──  (* Alarm pre heater               *)
         0109           0052 │ TMR │                                     Cross reference for %M0921
                             │0.10s│                                     -] [- 35,338,339
Alarm   Pulse                │     │                                     -]/[- 76,179,346
pre     Alarm                │     │
heater  Reset                │     │
         S03H_               │     │
%M0921  %T0004               │     │
──┤ ├────┤/├──────────CONST ─┤PV   │
 0338    0363        +00005  └─────┘
                             Delay
                             check
                             pre
                             heater

                             %R0265

Alarm                                                                          << RUNG 339  STEP #1653 >>
pre                     With
heater  Flash   Step 0  Cap
         FLASH  STEP_0                                            H036
%M0921  %M0003  %M0100  %M0210                                   %M0164
──┤ ├────┤ ├────┤ ├────┤ ├──────────────────────────────────────( )──  (* Alarm pre heater               *)
 0338    0014   0022    0052                                            Cross reference for H036
                                                                        FBIO  (370)
Current
relay   Slow
connect flash
        S_FLASH
%M0786  %M0001
──┤/├────┤ ├──
         0016

        Alarm                                                                  << RUNG 340  STEP #1661 >>
Alarm   low lev Electri
lubri-  paddle  cal
cation  elevat  alarm

%M0034  %M0047  %M0044                                           %M0094
──┤/├────┤/├────┤/├──────────────────────────────────────────────( )──  (* No  blue alarms on              *)
 0229   0275    0234                                                    Cross reference for %M0094
        Low                                                             -] [- 341,359,360,361
Lubric  level                                                           -]/[- 360,361
oil     paddle
level   elevat
 B143
%I0037  %M0887
──┤ ├────┤ ├──
         0272

Program: D484631                   C:\LM90\TCAP47\D484631                                   Block: _MAIN
```

EM1.1TH900627en.fm

```
06-16-03  10:35                    GE FANUC SERIES 90-30/90-20/MICRO (v9.02)                    Page    73
                                        Tetra Cap Applicator 47 -0100
                                   48463-0001 ELD 001 AD 030612 JNT ECM:135545

No              Not                                                          << RUNG 341  STEP #1668 >>
blue    Alarm   ready
alarms  queue   down
on      outfeed stream

%M0094  %M0038  %M0060                                  %M0090
──┤ ├──────┤/├──────┤/├──────────────────────────────────────────────( )──  (* No  blue alarms on              *)
 0340    0251    0303                                                         Cross reference for %M0090
                                                                             -] [- 359
                                                                             -]/[- 357

Alarm   Alarm   Alarm   Alarm                                                << RUNG 342  STEP #1672 >>
lubri-  low lev queue   electri
cation  padElev outfeed cal
LED     LED     LED     cabinet
 H010    H024    H015    H012
%M0155  %M0140  %M0133  %M0170                          %M0095
──┤/├────┤/├────┤/├────┤/├──────────────────────────────────────────────( )──  (* No  blue leds on                *)
 0230    0276    0252    0235                                                 Cross reference for %M0095
        Low                                                                  -] [- 343
Lubric  level   Alarm                                                        -]/[- 359
oil     paddle  queue
level   elevat  outfeed
 B143
%I0037  %M0887  %M0825
──┤ ├────┤ ├────┤/├──
         0272    0249

No      Alarm                                                                << RUNG 343  STEP #1682 >>
blue    queue   Run
leds on outfeed enable

%M0095  %M0825  %M0500                                  %M0091
──┤ ├──────┤/├──────┤ ├──────────────────────────────────────────────( )──  (* No  blue leds on                *)
 0342    0249    0189                                                         Cross reference for %M0091
                                                                             -]/[- 359

                                                Alarm   AlarmNo               << RUNG 344  STEP #1686 >>
        Alarm   Alarm   Alarm   Alarm   Alarm   low     package Alarm
Alarm   motor   air     lubri-  freque  fallen  hotmelt to      jammed
doors   prot    press   cation  convert package temp    infeed  outfeed

%M0031  %M0032  %M0033  %M0034  %M0036  %M0037  %M0039  %M0040  %M0042
──┤/├────┤/├────┤/├────┤/├────┤/├────┤/├────┤/├────┤/├────┤/├──────<+>
 0217    0220    0226    0229    0239    0246    0254    0260    0268
                Check   Lubric
                no air  oil
                press   level
                         B143
                %M0072  %I0037
                ──┤ ├────┤/├──
                 0224

        Alarm   Alarm                   Alarm   Alarm                        << RUNG 345  STEP #1700 >>
        cap on  missing Alarm   Alarm   no cap  no
        carrier Cap on  lead    cap     at      rotate
        BeforeI package rail    pusher  pusher  In-feed

        %M0043  %M0816  %M0052  %M0054  %M0056  %M0057
<+>─────┤/├────┤/├────┤/├────┤/├────┤/├────┤/├──────────────────────<+>
         0318            0314    0300    0290    0324

                        Alarm           Low     Alarm                        << RUNG 346  STEP #1708 >>
        Alarm           low     Alarm   level   queue
        no cap  With    level   pre     paddle  cap
        queue   Cap     In-feed heater  elevat  detect

        %M0058  %M0210  %M0049  %M0921  %M0887  %M0050
<+>─────┤/├────┤ ├────┤/├────┤/├────┤/├────┤/├──────────────────────<+>
         0333    0052    0280    0338    0272    0294
                                        Alarm   Alarm
                                        low lev queue
                With                    paddle  cap
                Cap                     elevat  detect

                %M0210                  %M0047  %M0787
                ──┤/├──                ──┤/├────┤/├──
                 0052                    0275

        Alarm   Alarm                                                        << RUNG 347  STEP #1722 >>
        clutch  index
        main    out of
        motor   pos.

        %M0041  %M0045                                  %M0087
<+>─────┤/├────┤/├──────────────────────────────────────────────────( )──  (* No yellow alarms on               *)
         0242    0263                                                         Cross reference for %M0087
                                                                             -] [- 32,348

Program: D484631                    C:\LM90\TCAP47\D484631                                   Block: _MAIN
```

EM1.1TH900627en.fm

```
06-16-03  10:35                    GE FANUC SERIES 90-30/90-20/MICRO (v9.02)                    Page    74
                                        Tetra Cap Applicator 47 -0100
                                   48463-0001 ELD 001 AD 030612 JNT ECM:135545

|No      Alarm                                                                << RUNG 348  STEP #1726 >>
|yellow  cap
|alarms  chute
|on      open
|
|%M0087  %M0059                                                   %M0092
|──┤ ├──────┤/├──────────────────────────────────────────────────( )──  (* No yellow alarms on              *)
|  0347    0336                                                            Cross reference for %M0092
|                                                                          -] [- 27,41,349,359
|
|No              Not                                                       << RUNG 349  STEP #1729 >>
|yellow  Alarm   ready
|alarms  queue   down
|on      outfeed stream
|
|%M0092  %M0038  %M0060                                           %M0096
|──┤ ├──────┤/├──────┤/├──────────────────────────────────────────( )──  (* No yellow alarms on              *)
|  0348    0251    0303                                                    Cross reference for %M0096
|                                                                          -] [- 360,361
|                                                                          -]/[- 357,360,361
|
|        Alarm   Alarm   Alarm           Alarm   Alarm   Alarm            << RUNG 350  STEP #1733 >>
|Alarm   motor   air     lubri-  Alarm   fallen  hotmelt no pack
|doors   prot    press   cation  freque package unit    to
|LED     LED     LED     LED     convert LED     LED     infeed
|  H007    H008    H009    H010    H013    H014    H016    H017
|%M0152  %M0153  %M0154  %M0155  %M0169  %M0132  %M0134  %M0135
|──┤/├──────┤/├──────┤/├──────┤/├──────┤/├──────┤/├──────┤/├──────────────<+>
|  0218    0221    0227    0230    0240    0247    0255    0261
|                 Check   Lubric                  Step 2
|                 no air  oil                     STEP_2
|                 press   level                   %M0102
|                         B143
|                 %M0072  %I0037
|                 ──┤ ├──────┤/├──
|                   0224                            0030
|
|        Alarm   Low             Alarm   Alarm   Alarm   Alarm           << RUNG 351  STEP #1748 >>
|        jammed  level   AlarmNo CapMiss pusher  door    lead
|        outfeed paddle  cap at  on pack cap to   In-     rail
|        LED     elevat  pusher  LED     index   feeder  LED
|         H023           H026    H027    H028    H030    H031
|        %M0139  %M0887  %M0142  %M0143  %M0144  %M0158  %M0159
|<+>──────┤/├──────┤/├──────┤/├──────┤/├──────┤/├──────┤/├──────────────<+>
|         0269    0272    0291    0295    0301    0310    0315
|                Alarm
|                low lev
|                padElev
|                LED
|                 H024
|                %M0140
|                ──┤/├──
|                  0276
|
|        Alarm   AlarmNo Alarm   Alarm   Alarm                           << RUNG 352  STEP #1759 >>
|        cap on  rotate  no cap  clutch  index
|        carrier In-feed queue   main    out of
|        BeforeI Led     LED     motor   pos.
|         H032    H033    H034    H011    H018
|        %M0160  %M0161  %M0162  %M0156  %M0136                   %M0089
|<+>──────┤/├──────┤/├──────┤/├──────┤/├──────┤/├──────────────────( )──  (* No yellow leds on               *)
|         0319    0325    0334    0243    0264                            Cross reference for %M0089
|                                                                          -] [- 32,353
|
|        Alarm                                                             << RUNG 353  STEP #1766 >>
|No      cap
|yellow  chute
|leds on openLED
|         H035
|%M0089  %M0163                                                   %M0093
|──┤ ├──────┤/├──────────────────────────────────────────────────( )──  (* No yellow leds on               *)
|  0352    0337                                                            Cross reference for %M0093
|                                                                          -] [- 27,354,359
|
|        Alarm   Not                                                       << RUNG 354  STEP #1769 >>
|No      queue   ready
|yellow  outfeed down
|leds on LED     stream
|         H015    H029
|%M0093  %M0133  %M0157                                           %M0097
|──┤ ├──────┤/├──────┤/├──────────────────────────────────────────( )──  (* No yellow leds on               *)
|  0353    0252    0304                                                    Cross reference for %M0097
|                                                                          -]/[- 360
|

Program: D484631                          C:\LM90\TCAP47\D484631                          Block: _MAIN
```

EM1.1TH900627en.fm

```
06-16-03  10:35                    GE FANUC SERIES 90-30/90-20/MICRO (v9.02)                    Page    75
                                        Tetra Cap Applicator 47 -0100
                                   48463-0001 ELD 001 AD 030612 JNT ECM:135545

|        Alarm                                                          << RUNG 355  STEP #1773 >>
|Alarm   air     Check   Check
|Em stop press   K002    K003
|
|%M0030  %M0033  %M0088  %M0082                                %M0098
|──┤/├───┤/├────┤/├─────┤/├──────────────────────────────────────( )──  (* No red alarms on                  *)
|  0214   0226    0236    0237                                          Cross reference for %M0098
|        |                                                              -] [- 27,32,41,359,360,361
|        |Check                                                         -]/[- 357,361
|        |no air
|        |press
|        |
|        |%M0072
|        └──┤/├──┘
|          0224
|
|        Alarm                                                          << RUNG 356  STEP #1780 >>
|Alarm   air     Alarm
|Em stop press   freque
|LED     LED     convert
|  H006   H009    H013
|%M0151  %M0154  %M0169                                        %M0099
|──┤/├───┤/├────┤/├──────────────────────────────────────────( )──  (* No red leds on                   *)
|  0215   0227    0240                                                  Cross reference for %M0099
|        |                                                              -] [- 359,360
|        |Check                                                         -]/[- 361
|        |no air  Check   Check
|        |press   K002    K003
|        |
|        |%M0072  %M0088  %M0082
|        └──┤/├────┤/├─────┤/├──┘
|          0224    0236    0237
|
|No                                                                     << RUNG 357  STEP #1790 >>
|blue
|alarms
|on      Flash   Step 0
|         FLASH  STEP_0                                         H03S
|%M0090  %M0003  %M0100                                        %M0147
|──┤/├───┤ ├─────┤ ├──────────────────────────────────────────( )──  (* Reset/ Lamp test LED             *)
|  0341   0014    0022                                                  Cross reference for H03S
|No                                                                     FBIO  (370)
|yellow
|alarms
|on
|
|%M0096
|──┤/├──┘
|  0349
|
|No red
|alarms
|on
|
|%M0098
|──┤/├──┘
|  0355
|Alarm   Alarm
|doors   door
|In-     In-
|feeder  feeder
|         H030
|%M0035  %M0158
|──┤ ├───┤ ├──────┘
|  0309   0310
|
|Setting
|encoder
|
|%M0209
|──┤ ├──────────┘
|
|Memory
|flash
|reset
|button  Flash   Step 0
|         FLASH  STEP_0
|%M0080  %M0003  %M0100
|──┤ ├───┤ ├─────┤ ├──┘
|  0358   0014    0022
|
```

EM1.1TH900627en.fm

```
06-16-03  10:35                    GE FANUC SERIES 90-30/90-20/MICRO (v9.02)                    Page    76
                                          Tetra Cap Applicator 47 -0100
                                   48463-0001 ELD 001 AD 030612 JNT ECM:135545

Em stop                                                                          << RUNG 358  STEP #1804 >>
circuit Em stop
          L12
%I0002  %I0001                                                   %M0080
──┤ ├────┤/├──────────┬──────────┬──────────────────────────────────( )──  (* Memory flash reset button        *)
                      │          │                                           Cross reference for %M0080
                      │          │                                           -] [- 357
Door                  │          │
applica               │          │
tor           Door    │          │
circuit Em stop applica│          │
          L12     tor │          │
          L12     L13 │          │
%I0014  %I0001  %I0013│          │
──┤ ├────┤ ├────┤/├──┘          │
                                 │
Doors                            │
in-           Door    Doors      │
feeder        applica in-        │
circuit Em stop tor   feeder     │
          L12     L13     L14    │
%I0032  %I0001  %I0013  %I0031   │
──┤ ├────┤ ├────┤ ├────┤/├──────┘
                                 │
                                 │
                                 │
```

```
06-16-03  10:35                    GE FANUC SERIES 90-30/90-20/MICRO (v9.02)                    Page    77
                                        Tetra Cap Applicator 47 -0100
                                   48463-0001 ELD 001 AD 030612 JNT ECM:135545

|No                                                                          << RUNG 360  STEP #1840 >>
|yellow                  No red
|alarms                  alarms  No red
|on              Flash   on      leds on Step 0
|                 FLASH                  STEP_0                      H101_2
|%M0096          %M0003  %M0098  %M0099  %M0100                      %Q0047
|──┤/├──────────┤ ├────┤ ├─────┤ ├─────┤ ├──────────────────────────( )──  (* Warning lamp Yellow              *)
|0349            0014    0355    0356    0022                                Cross reference for H101_2
|        No                                                                  -] [- 359
|No      blue
|yellow  alarms
|leds on on
|
|%M0097  %M0094
|──┤/├────┤/├──┐
|0354    0340  |
|        No     |
|No      yellow |
|yellow  alarms |
|leds on on     |
|               |
|%M0097  %M0096 %M0094
|──┤/├────┤ ├───┤ ├──┐
|0354    0349   0340 |
|Zero               |
|pos                |
|angle   Setting    |
|encoder encoder    |
| AV_10             |
|%M0211  %M0209     |
|──┤ ├────┤ ├──────┼──────────────────────────┐
|                   |                          |
|Alarm              |                          |
|door               |                          |
|In-                |                          |
|feeder             |                          |
| H030              |                          |
|%M0158             |                          |
|──┤ ├──────────────┘                          |
|0310                                          |
|                                              |
|        Warning                               |
|Lamp    lamp                                  |
|test    Red                                   |
|        H101_3                                |
|%M0006  %Q0048                                |
|──┤ ├────┤ ├──────────────────────────────────┘
|0362    0361

|No red                                                                      << RUNG 361  STEP #1860 >>
|alarms
|on              Flash           Step 0
|                 FLASH          STEP_0                              H101_3
|%M0098          %M0003          %M0100                              %Q0048
|──┤/├──────────┤ ├─────────────┤ ├──────────────────────────────────( )──  (* Warning lamp Red                 *)
|0355            0014            0022                                        Cross reference for H101_3
|        No                                                                  -] [- 360
|        blue
|No red  alarms
|leds on on
|
|%M0099  %M0094
|──┤/├────┤/├──┐
|0356    0340  |
|        No     |
|        yellow |
|        alarms |
|        on     |
|               |
|        %M0096 |
|        ──┤/├──┘
|         0349  |
|               |
|               No      No
|        No red yellow  blue
|No red  alarms alarms  alarms
|leds on on     on      on
|               |       |
|%M0099  %M0098 %M0096  %M0094
|──┤/├────┤ ├───┤ ├────┤ ├──┐
|0356    0355   0349    0340 |
|                           |
|+5 pos                     |
|angle   Setting            |
|encoder encoder            |
| AV_12                     |
|%M0213  %M0209             |
|──┤ ├────┤ ├──────────────┼──────────────────┐
|                           |                  |
|Lamp                       |                  |
|test                       |                  |
|                           |                  |
|%M0006                     |                  |
|──┤ ├──────────────────────┘                  |
|0362                                          |

Program: D484631                    C:\LM90\TCAP47\D484631                    Block: _MAIN
```

EM1.1TH900627en.fm

```
06-16-03  10:35                    GE FANUC SERIES 90-30/90-20/MICRO (v9.02)                    Page    78
                                        Tetra Cap Applicator 47 -0100
                                  48463-0001 ELD 001 AD 030612 JNT ECM:135545

Reset/                                                                  << RUNG 362  STEP #1878 >>
Lamp
test
 S03H
%I0007                                                   %M0006
──┤ ├──┌──────┐──────────────────────────────────────────( )──  (* Lamp test                        *)
        TMR                                                       Cross reference for %M0006
        0.10s                                                     -] [- 153,311,359,360,361,372
 CONST ─PV
 +00020
        └──────┘

        Lamp
        test

        %R0007

Reset/                                                                  << RUNG 363  STEP #1881 >>
Lamp
test
 S03H                                                     S03H_
%I0007                                                   %T0004
──┤ ├──────────────────────────────────────────────────────(^)──  (* Pulse Alarm Reset                *)
                                                                  Cross reference for S03H_
                                                                  -] [- 182,193,214,217,220,226,229,234,239,242,246,
                                                                        251,254,260,263,268,275,280,288,290,294,300,
                                                                        303,309,314,318,324,333,336
                                                                  -]/[- 175,197,198,223,224,236,237,244,256,257,265,
                                                                        278,296,297,338
```

EM1.1TH900627en.fm

```
06-16-03  10:35                    GE FANUC SERIES 90-30/90-20/MICRO (v9.02)                    Page    79
                                        Tetra Cap Applicator 47 -0100
                                   48463-0001 ELD 001 AD 030612 JNT ECM:135545

(*************************************************************************)
(*                                                                       *)
(* MULTIPLEX BOARD                                                       *)
(*                                                                       *)
(*************************************************************************)

FST_SCN                                                          << RUNG 365  STEP #1884 >>
%S0001                                                   %M0121
──┤ ├──┌MOVE_──────────────────────────────────────────────(R)──  (* Synch mplx train                  *)
       │ INT │                                                     Cross reference for %M0121
       │     │                                                     -] [- 367,377
       │     │                                                     -]/[- 366
       │     │                                                     -( )  366
       │     │
       │     │
       │     │
```

```
06-16-03  10:35                    GE FANUC SERIES 90-30/90-20/MICRO (v9.02)                    Page    80
                                        Tetra Cap Applicator 47 -0100
                                 48463-0001 ELD 001 AD 030612 JNT ECM:135545

Pulse                                                                          << RUNG 370  STEP #1897 >>
End
mplx
train

%T0006
 0368      MOVE_
            WORD

                   Copy of
                   data
Step up            word 2
LED
 H01S
%M0145 IN   Q     %R0703
        LEN
       00002

Pulse                                                                          << RUNG 371  STEP #1899 >>
End
mplx
train

%T0006
 0368      MOVE_
            WORD

Alarm              Copy of
freque             data
convert            word 3
 H013
%M0169 IN   Q     %R0705
        LEN
       00002

Lamp                                                                           << RUNG 372  STEP #1901 >>
test

%M0006
 0362      MOVE_
            WORD

                   Copy of
                   data
                   word 1

 CONST IN   Q     %R0701
   FFFF  LEN
       00006

Pulse                                                                          << RUNG 373  STEP #1903 >>
End
mplx
train

%T0006
 0368       SHL_
            WORD

Copy of
data
word 1

%R0701 IN B2
        LEN
       00002

                   Copy of
                   data
                   word 1

 CONST N    Q     %R0701
 +00011

ALW_OFF
%S0008
          B1

Program: D484631                   C:\LM90\TCAP47\D484631                   Block: _MAIN
```

EM1.1TH900627en.fm

```
06-16-03  10:35                    GE FANUC SERIES 90-30/90-20/MICRO (v9.02)                    Page    81
                                        Tetra Cap Applicator 47 -0100
                                  48463-0001 ELD 001 AD 030612 JNT ECM:135545

Pulse                                                                   << RUNG 374  STEP #1906 >>
End
mplx
train

%T0006
 0368      SHL_
           WORD

Copy of
data
word 2

%R0703 — IN B2 —
           LEN
          00002

                Copy of
                data
                word 2

 CONST —N    Q —%R0703
 +00011

ALW_OFF
%S0008
 B1

Pulse                                                                   << RUNG 375  STEP #1909 >>
End
mplx
train

%T0006
 0368      SHL_
           WORD

Copy of
data
word 3

%R0705 — IN B2 —
           LEN
          00002

                Copy of
                data
                word 3

 CONST —N    Q —%R0705
 +00011

ALW_OFF
%S0008
 B1

ALW_ON                                                                  << RUNG 376  STEP #1912 >>
%S0007                                                   %M0120
           LE_                                            ( )—  (* Cond send synch train            *)
           INT                                                  Cross reference for %M0120
                                                                -] [- 377,378,379,380
Length
synch
pulse
train

%R0501 — I1  Q

 CONST — I2
 +00010

Cond                                                                    << RUNG 377  STEP #1915 >>
send     Synch
synch    mplx
train    train
                                                         A072_17
%M0120   %M0121                                          %Q0041
 0376     0365                                           ( )—  (* Synch pulse train                *)
                                                                Cross reference for A072_17
                                                                         NONE
```

```
06-16-03  10:35                    GE FANUC SERIES 90-30/90-20/MICRO (v9.02)                    Page    82
                                        Tetra Cap Applicator 47 -0100
                                 48463-0001 ELD 001 AD 030612 JNT ECM:135545

Cond                                                                << RUNG 378  STEP #1918 >>
send
synch
train
                                                        A072_18
%M0120                                                  %Q0042
 0376    SHL_                                                  (* Data 1, pulse train                *)
         WORD                                           ( )—   Cross reference for A072_18
                                                                      NONE
Copy of
data
word 1
%R0701 — IN B2
          LEN
         00002
                Copy of
                data
                word 1
CONST —  N    Q —%R0701
 +00001
ALW_OFF
%S0008
         B1

Cond                                                                << RUNG 379  STEP #1922 >>
send
synch
train
                                                        A072_19
%M0120                                                  %Q0043
 0376    SHL_                                                  (* Data 2, pulse train                *)
         WORD                                           ( )—   Cross reference for A072_19
                                                                      NONE
Copy of
data
word 2
%R0703 — IN B2
          LEN
         00002
                Copy of
                data
                word 2
CONST —  N    Q —%R0703
 +00001
ALW_OFF
%S0008
         B1

Cond                                                                << RUNG 380  STEP #1926 >>
send
synch
train
                                                        A072_20
%M0120                                                  %Q0044
 0376    SHL_                                                  (* Data 3, pulse train                *)
         WORD                                           ( )—   Cross reference for A072_20
                                                                      NONE
Copy of
data
word 3
%R0705 — IN B2
          LEN
         00002
                Copy of
                data
                word 3
CONST —  N    Q —%R0705
 +00001
ALW_OFF
%S0008
         B1
```

EM1.1TH900627en.fm

```
06-16-03  10:35                    GE FANUC SERIES 90-30/90-20/MICRO (v9.02)                    Page    83
                                        Tetra Cap Applicator 47 -0100
                                   48463-0001 ELD 001 AD 030612 JNT ECM:135545

 (*****************************************************************************)
 (*                                                                           *)
 (* SIGNALS TO PLMS                                                           *)
 (*                                                                           *)
 (*****************************************************************************)

                Signals                                                << RUNG 382  STEP #1931 >>
                for
ALW_ON          PLMS
%S0007
 ──┤ ├──┬──────────────┐
          │ CALL PLMS_5  │
          │ (SUBROUTINE) │
          └──────────────┘

[      END OF PROGRAM LOGIC      ]
```

EM1.1TH900627en.fm

```
06-16-03  10:35                    GE FANUC SERIES 90-30/90-20/MICRO (v9.02)                    Page    84
                                          Tetra Cap Applicator 47 -0100
                                   48463-0001 ELD 001 AD 030612 JNT ECM:135545

[  START LD SUBROUTINE  PLMS_5   ]

[     VARIABLE DECLARATIONS      ]

[   START OF SUBROUTINE LOGIC    ]

 (*************************************************************************)
 (*                                                                       *)
 (* SIGNALS TO PLMS                                                       *)
 (*                                                                       *)
 (*************************************************************************)

 >>>>
```

```
06-16-03  10:35                    GE FANUC SERIES 90-30/90-20/MICRO (v9.02)                    Page    85
                                        Tetra Cap Applicator 47 -0100
                                   48463-0001 ELD 001 AD 030612 JNT ECM:135545

 >>>>
```

```
06-16-03  10:35                    GE FANUC SERIES 90-30/90-20/MICRO (v9.02)                    Page    86
                                        Tetra Cap Applicator 47 -0100
                                   48463-0001 ELD 001 AD 030612 JNT ECM:135545

DE Ext                                                                          << RUNG 13  STEP #0026 >>
signal
enable

%G0003
 0008                  AND_                          AND_
                       WORD                          WORD

DE Prod  Miscel-                Miscel- Miscel-                 Miscel-
time     laneous                laneous laneous                 laneous
         signals                signals signals                 signals
%G0004
 0127    %R0924        I1   Q   %R0924  %R0925        I1   Q    %R0925

Ready
for
prod

%G0005
 0011     CONST  I2                      CONST  I2
           03FF                           0000

 >>>>
```

```
06-16-03  10:35                    GE FANUC SERIES 90-30/90-20/MICRO (v9.02)                    Page    87
                                        Tetra Cap Applicator 47 -0100
                                   48463-0001 ELD 001 AD 030612 JNT ECM:135545

 >>>>
```

```
06-16-03  10:35                    GE FANUC SERIES 90-30/90-20/MICRO (v9.02)                    Page    88
                                          Tetra Cap Applicator 47 -0100
                                   48463-0001 ELD 001 AD 030612 JNT ECM:135545

 >>>>
```

```
06-16-03  10:35                    GE FANUC SERIES 90-30/90-20/MICRO (v9.02)                    Page    89
                                        Tetra Cap Applicator 47 -0100
                                   48463-0001 ELD 001 AD 030612 JNT ECM:135545

 >>>>
```

```
06-16-03  10:35                    GE FANUC SERIES 90-30/90-20/MICRO (v9.02)                    Page    90
                                          Tetra Cap Applicator 47 -0100
                                   48463-0001 ELD 001 AD 030612 JNT ECM:135545

 >>>>
```

```
06-16-03  10:35                    GE FANUC SERIES 90-30/90-20/MICRO (v9.02)                    Page    91
                                        Tetra Cap Applicator 47 -0100
                                   48463-0001 ELD 001 AD 030612 JNT ECM:135545

 (*************************************************************************)
 (*                                                                       *)
 (* DOWN TIME                                                             *)
 (*                                                                       *)
 (* Down time or Equipment stops are stops caused by the machine itself,  *)
 (* e.g. jam, door open. Only the reason that stops the machine shall be  *)
 (* logged. For example if a door is open the reason why this is done     *)
 (* should if possibly be logged instead of door open.                    *)
 (*                                                                       *)
 (*************************************************************************)

 >>>>
```

```
06-16-03  10:35                    GE FANUC SERIES 90-30/90-20/MICRO (v9.02)                    Page    92
                                          Tetra Cap Applicator 47 -0100
                                   48463-0001 ELD 001 AD 030612 JNT ECM:135545

 >>>>
```

```
06-16-03  10:35                    GE FANUC SERIES 90-30/90-20/MICRO (v9.02)                    Page    93
                                        Tetra Cap Applicator 47 -0100
                                   48463-0001 ELD 001 AD 030612 JNT ECM:135545

 >>>>
```

```
06-16-03  10:35                    GE FANUC SERIES 90-30/90-20/MICRO (v9.02)                    Page    94
                                          Tetra Cap Applicator 47 -0100
                                   48463-0001 ELD 001 AD 030612 JNT ECM:135545

 >>>>
```

```
06-16-03  10:35                    GE FANUC SERIES 90-30/90-20/MICRO (v9.02)                    Page    95
                                        Tetra Cap Applicator 47 -0100
                                   48463-0001 ELD 001 AD 030612 JNT ECM:135545

 >>>>
```

```
06-16-03  10:35                    GE FANUC SERIES 90-30/90-20/MICRO (v9.02)                    Page    96
                                          Tetra Cap Applicator 47 -0100
                                   48463-0001 ELD 001 AD 030612 JNT ECM:135545

 >>>>
```

```
06-16-03  10:35                          GE FANUC SERIES 90-30/90-20/MICRO (v9.02)                          Page    97
                                              Tetra Cap Applicator 47 -0100
                                         48463-0001 ELD 001 AD 030612 JNT ECM:135545

 >>>>
```

```
06-16-03  10:35                    GE FANUC SERIES 90-30/90-20/MICRO (v9.02)                    Page    98
                                          Tetra Cap Applicator 47 -0100
                                   48463-0001 ELD 001 AD 030612 JNT ECM:135545

 >>>>
```

```
06-16-03  10:35                    GE FANUC SERIES 90-30/90-20/MICRO (v9.02)                    Page    99
                                        Tetra Cap Applicator 47 -0100
                                   48463-0001 ELD 001 AD 030612 JNT ECM:135545

 (*************************************************************************)
 (*                                                                       *)
 (* IDLE TIME SIGNALS                                                     *)
 (*                                                                       *)
 (* Note that OR instuction is used. In register %R0924 Information signal  *)
 (* values can be present.                                                *)
 (*************************************************************************)

 >>>>
```

```
06-16-03  10:35                    GE FANUC SERIES 90-30/90-20/MICRO (v9.02)                    Page   100
                                          Tetra Cap Applicator 47 -0100
                                     48463-0001 ELD 001 AD 030612 JNT ECM:135545

 >>>>
```

```
06-16-03  10:35                    GE FANUC SERIES 90-30/90-20/MICRO (v9.02)                    Page   101
                                        Tetra Cap Applicator 47 -0100
                                   48463-0001 ELD 001 AD 030612 JNT ECM:135545

                                 No      No                                        << RUNG 111  STEP #0336 >>
                Manual  DE Ext   event   event
DE Prod No PLMS step    signal   in      in
time    alarm   down    enable   %R0922  %R0923

%G0004  %G0001  %G0002  %G0003   %G0022  %G0023
 /                                                 OR_
 0016    0043    0109    0008     0073    0097     WORD

                                         Miscel-          Miscel-
                                         laneous          laneous
                                         signals          signals

                                         %R0924 I1   Q    %R0924

                                          CONST I2
                                            2000

 >>>>
```

```
06-16-03  10:35                          GE FANUC SERIES 90-30/90-20/MICRO (v9.02)                          Page   102
                                                Tetra Cap Applicator 47 -0100
                                          48463-0001 ELD 001 AD 030612 JNT ECM:135545

|        Low                      No      No      No                                  << RUNG 119  STEP #0373 >>
|        level            DE Ext  event   event   event
| DE Prod In-feed No PLMS signal  in      in      in
| time    memory  alarm   enable  %R0922  %R0923  %R0924
|
| %G0004  %G0046  %G0001  %G0003  %G0022  %G0023  %G0024
|-┤/├────┤ ├────┤ ├────┤ ├────┤ ├────┤ ├────┤ ├──┌──────┐─
| 0016    0118    0043    0008    0073    0097    0116   │ OR_  │
|                                                        │ WORD │
|                                                Miscel-  │      │  Miscel-
|                                                laneous  │      │  laneous
|                                                signals  │      │  signals
|                                                %R0925 ─│I1  Q│─%R0925
|                                                 CONST ─│I2    │
|                                                  0004  └──────┘
|
| >>>>
```

```
06-16-03  10:35                    GE FANUC SERIES 90-30/90-20/MICRO (v9.02)                    Page   103
                                        Tetra Cap Applicator 47 -0100
                                   48463-0001 ELD 001 AD 030612 JNT ECM:135545

 >>>>
```

```
06-16-03  10:35                    GE FANUC SERIES 90-30/90-20/MICRO (v9.02)                    Page   104
                                          Tetra Cap Applicator 47 -0100
                                   48463-0001 ELD 001 AD 030612 JNT ECM:135545

 (*************************************************************************)
 (*                                                                       *)
 (* PACKAGE COUNTERS                                                      *)
 (*                                                                       *)
 (*************************************************************************)

 >>>>
```

```
06-16-03  10:35                    GE FANUC SERIES 90-30/90-20/MICRO (v9.02)                    Page   105
                                        Tetra Cap Applicator 47 -0100
                                   48463-0001 ELD 001 AD 030612 JNT ECM:135545

DE Ext                                                                          << RUNG 135  STEP #0432 >>
signal
enable

%G0003
 0008      MOVE_
            WORD

                 Reserv
                 for
Package          package
in               in

%R0920 — IN   Q — %R0926
          LEN
         00001

 >>>>
```

```
06-16-03  10:35                    GE FANUC SERIES 90-30/90-20/MICRO (v9.02)                    Page   106
                                        Tetra Cap Applicator 47 -0100
                                   48463-0001 ELD 001 AD 030612 JNT ECM:135545

DE Ext                                                                          << RUNG 141  STEP #0449 >>
signal
enable

%G0003
 0008          MOVE_
                WORD

Reserv
for
package
out                     Package
                        out

%R0928 ---- IN   Q ---- %R0921
             LEN
            00001

DE Ext                                                                          << RUNG 142  STEP #0451 >>
signal
enable

%G0003
 0008          MOVE_
                WORD

                        Reserv
                        for
Package                 package
out                     out

%R0921 ---- IN   Q ---- %R0928
             LEN
            00001

 >>>>
```

```
06-16-03  10:35                    GE FANUC SERIES 90-30/90-20/MICRO (v9.02)                    Page   107
                                        Tetra Cap Applicator 47 -0100
                                  48463-0001 ELD 001 AD 030612 JNT ECM:135545

Pulse                                                                          << RUNG 146  STEP #0459 >>
DE
enable
on

%G0051
 0144      MOVE_
            WORD

                Reserv
                for
                package
                in

 CONST     IN   Q   %R0926
  0000      LEN
           00004

[    END OF SUBROUTINE LOGIC     ]
```

```
06-16-03  10:35                    GE FANUC SERIES 90-30/90-20/MICRO (v9.02)                    Page   108
                                          Tetra Cap Applicator 47 -0100
                                   48463-0001 ELD 001 AD 030612 JNT ECM:135545

[  START LD SUBROUTINE  1T0001   ]

[     VARIABLE DECLARATIONS      ]

[   START OF SUBROUTINE LOGIC    ]

 >>>>
```

```
06-16-03  10:35                    GE FANUC SERIES 90-30/90-20/MICRO (v9.02)                    Page   109
                                        Tetra Cap Applicator 47 -0100
                                   48463-0001 ELD 001 AD 030612 JNT ECM:135545

 (*****************************************************************************)
 (*                                                                           *)
 (* ANGLE ENCODER                                                             *)
 (*                                                                           *)
 (*****************************************************************************)

Angle                                                                << RUNG 8  STEP #0008 >>
encoder

%I0024                                                     %M0024
──┤ ├──────────────────────────────────────────────────────────( )──  (* Bit 8 angle encoder              *)
                                                                     Cross reference for %M0024
                                                                     -] [- 9
                                                                     -]/[- 9
                                                                     FBIO  (16)

Bit 8                                                                << RUNG 9  STEP #0010 >>
angle   Angle
encoder encoder

%M0024  %I0023                                             %M0023
──┤ ├────┤/├──────────────────────────────────────────────────────( )──  (* Bit 7 angle encoder              *)
 0008                                                                Cross reference for %M0023
                                                                     -] [- 10
Bit 8                                                                -]/[- 10
angle   Angle                                                        FBIO  (16)
encoder encoder

%M0024  %I0023
──┤/├────┤ ├──
 0008

Bit 7                                                                << RUNG 10  STEP #0016 >>
angle   Angle
encoder encoder

%M0023  %I0022                                             %M0022
──┤ ├────┤/├──────────────────────────────────────────────────────( )──  (* Bit 6 angle encoder              *)
 0009                                                                Cross reference for %M0022
                                                                     -] [- 11
Bit 7                                                                -]/[- 11
angle   Angle                                                        FBIO  (16)
encoder encoder

%M0023  %I0022
──┤/├────┤ ├──
 0009

Bit 6                                                                << RUNG 11  STEP #0022 >>
angle   Angle
encoder encoder

%M0022  %I0021                                             %M0021
──┤ ├────┤/├──────────────────────────────────────────────────────( )──  (* Bit 5 angle encoder              *)
 0010                                                                Cross reference for %M0021
                                                                     -] [- 12
Bit 6                                                                -]/[- 12
angle   Angle                                                        FBIO  (16)
encoder encoder

%M0022  %I0021
──┤/├────┤ ├──
 0010

Bit 5                                                                << RUNG 12  STEP #0028 >>
angle   Angle
encoder encoder

%M0021  %I0020                                             %M0020
──┤ ├────┤/├──────────────────────────────────────────────────────( )──  (* Bit 4 angle encoder              *)
 0011                                                                Cross reference for %M0020
                                                                     -] [- 13
Bit 5                                                                -]/[- 13
angle   Angle                                                        FBIO  (16)
encoder encoder

%M0021  %I0020
──┤/├────┤ ├──
 0011

Program: D484631                    C:\LM90\TCAP47\D484631                    Block: 1T0001(SUBR 01)
```

EM1.1TH900627en.fm

```
06-16-03  10:35                    GE FANUC SERIES 90-30/90-20/MICRO (v9.02)                    Page   110
                                        Tetra Cap Applicator 47 -0100
                                 48463-0001 ELD 001 AD 030612 JNT ECM:135545

Bit 4                                                                   << RUNG 13  STEP #0034 >>
angle   Angle
encoder encoder

%M0020  %I0019                                          %M0019
─┤ ├──────┤/├──────────────────────────────────────────( )──  (* Bit 3 angle encoder              *)
 0012                                                           Cross reference for %M0019
                                                                -] [- 14
Bit 4                                                           -]/[- 14
angle   Angle                                                   FBIO  (16)
encoder encoder

%M0020  %I0019
─┤/├──────┤ ├─
 0012

Bit 3                                                           << RUNG 14  STEP #0040 >>
angle   Angle
encoder encoder

%M0019  %I0018                                          %M0018
─┤ ├──────┤/├──────────────────────────────────────────( )──  (* Bit 2 angle encoder              *)
 0013                                                           Cross reference for %M0018
                                                                -] [- 15
Bit 3                                                           -]/[- 15
angle   Angle                                                   FBIO  (16)
encoder encoder

%M0019  %I0018
─┤/├──────┤ ├─
 0013

Bit 2                                                           << RUNG 15  STEP #0046 >>
angle   Angle
encoder encoder

%M0018  %I0017                                          %M0017
─┤ ├──────┤/├──────────────────────────────────────────( )──  (* Bit 1 angle encoder              *)
 0014                                                           Cross reference for %M0017
                                                                FBIO  16
Bit 2
angle   Angle
encoder encoder

%M0018  %I0017
─┤/├──────┤ ├─
 0014

ALW_ON                                                          << RUNG 16  STEP #0052 >>
%S0007
─┤ ├──┌──────┐─
      │AND_  │
      │WORD  │
Bit 1 │      │
angle │      │ Angle
encoder      │ encoder
%M0017 ─I1  Q─%R0369
 CONST ─I2
   00FF
ALW_ON                                                  AV_1    << RUNG 17  STEP #0054 >>
%S0007                                                  %M0200
─┤ ├──┌──────┐──────────────────────────────────────────( )──  (* Synch pos infeed                 *)
      │RANGE │                                                  Cross reference for AV_1
      │ INT  │                                                  -] [- 78
 CONST ─L1  Q─
 +00190
 CONST ─L2
 +00200
Angle
encoder
%R0369 ─IN
```

EM1.1TH900627en.fm

```
06-16-03  10:35                    GE FANUC SERIES 90-30/90-20/MICRO (v9.02)                    Page   111
                                        Tetra Cap Applicator 47 -0100
                                   48463-0001 ELD 001 AD 030612 JNT ECM:135545

ALW_ON                                                                  AV_2    << RUNG 18  STEP #0057 >>
%S0007                                                                 %M0201
 ─┤ ├─ RANGE                                                          ─( )─  (* Carrier chain stop pos          *)
        INT                                                                    Cross reference for AV_2
                                                                                     NONE
 CONST ─ L1   Q
 +00110
 CONST ─ L2
 +00120
Angle
encoder
%R0369 ─ IN

ALW_ON                                                                  AV_3    << RUNG 19  STEP #0060 >>
%S0007                                                                 %M0202
 ─┤ ├─ RANGE                                                          ─( )─  (* Carrier chain shift reg          *)
        INT                                                                    Cross reference for AV_3
                                                                                     NONE
 CONST ─ L1   Q
 +00120
 CONST ─ L2
 +00130
Angle
encoder
%R0369 ─ IN

ALW_ON                                                                  AV_4    << RUNG 20  STEP #0063 >>
%S0007                                                                 %M0203
 ─┤ ├─ RANGE                                                          ─( )─  (* Synch pos hotmelt part 1         *)
        INT                                                                    Cross reference for AV_4
                                                                               -] [- 72
 CONST ─ L1   Q
 +00227
 CONST ─ L2
 +00255
Angle
encoder
%R0369 ─ IN

ALW_ON                                                                  AV_5    << RUNG 21  STEP #0066 >>
%S0007                                                                 %M0204
 ─┤ ├─ RANGE                                                          ─( )─  (* Synch pos pusher                 *)
        INT                                                                    Cross reference for AV_5
                                                                                     NONE
 CONST ─ L1   Q
 +00230
 CONST ─ L2
 +00240
Angle
encoder
%R0369 ─ IN

ALW_ON                                                                  AV_6    << RUNG 22  STEP #0069 >>
%S0007                                                                 %M0205
 ─┤ ├─ RANGE                                                          ─( )─  (* Check cap at index               *)
        INT                                                                    Cross reference for AV_6
                                                                                     NONE
 CONST ─ L1   Q
 +00040
 CONST ─ L2
 +00075
Angle
encoder
%R0369 ─ IN

Program: D484631                   C:\LM90\TCAP47\D484631                   Block: 1T0001(SUBR 01)
```

EM1.1TH900627en.fm

```
06-16-03  10:35                    GE FANUC SERIES 90-30/90-20/MICRO (v9.02)                    Page   112
                                        Tetra Cap Applicator 47 -0100
                                 48463-0001 ELD 001 AD 030612 JNT ECM:135545

ALW_ON                                                                  AV_7    << RUNG 23  STEP #0072 >>
%S0007                                                                  %M0206
-| |-  RANGE                                                           -( )-   (* Check if cap missed atindex      *)
       INT                                                                      Cross reference for AV_7
                                                                                          NONE
 CONST -L1  Q
 +00080
 CONST -L2
 +00090
Angle
encoder
%R0369 -IN

ALW_ON                                                                  AV_8    << RUNG 24  STEP #0075 >>
%S0007                                                                  %M0207
-| |-  RANGE                                                           -( )-   (* Check index in pos               *)
       INT                                                                      Cross reference for AV_8
                                                                                          NONE
 CONST -L1  Q
 +00208
 CONST -L2
 +00216
Angle
encoder
%R0369 -IN

ALW_ON                                                                  AV_9    << RUNG 25  STEP #0078 >>
%S0007                                                                  %M0208
-| |-  RANGE                                                           -( )-   (* Check index move                  *)
       INT                                                                      Cross reference for AV_9
                                                                                          NONE
 CONST -L1  Q
 +00150
 CONST -L2
 +00180
Angle
encoder
%R0369 -IN

ALW_ON                                                                  AV_13   << RUNG 26  STEP #0081 >>
%S0007                                                                  %M0216
-| |-  RANGE                                                           -( )-   (* Synch pos hotmelt part 2         *)
       INT                                                                      Cross reference for AV_13
                                                                                -] [- 72
 CONST -L1  Q
 +00000
 CONST -L2
 +00098
Angle
encoder
%R0369 -IN

ALW_ON                                                                  AV_14   << RUNG 27  STEP #0084 >>
%S0007                                                                  %M0218
-| |-  RANGE                                                           -( )-   (* Synch pos hotmelt dot           *)
       INT                                                                      Cross reference for AV_14
                                                                                -] [- 73
 CONST -L1  Q
 +00024
 CONST -L2
 +00036
Angle
encoder
%R0369 -IN

Program: D484631                    C:\LM90\TCAP47\D484631                    Block: 1T0001(SUBR 01)
```

EM1.1TH900627en.fm

```
06-16-03  10:35                    GE FANUC SERIES 90-30/90-20/MICRO (v9.02)                    Page   113
                                        Tetra Cap Applicator 47 -0100
                                 48463-0001 ELD 001 AD 030612 JNT ECM:135545

ALW_OFF                                                                  AV_15   << RUNG 28  STEP #0087 >>
%S0008                                                                  %M0219
──┤/├──┌──────┐──────────────────────────────────────────────────────( )──  (* Spare          *)
        RANGE │                                                              Cross reference for AV_15
         INT  │                                                              -] [- 73
 CONST ─ L1   Q │
 +00000         │
 CONST ─ L2     │
 +00002         │
Angle           │
encoder         │
%R0369 ─ IN     │
        └──────┘
```

```
06-16-03  10:35                    GE FANUC SERIES 90-30/90-20/MICRO (v9.02)                    Page   114
                                        Tetra Cap Applicator 47 -0100
                                   48463-0001 ELD 001 AD 030612 JNT ECM:135545

 (*************************************************************************)
 (*                                                                       *)
 (* SETTING ENCODER.                                                      *)
 (*                                                                       *)
 (*************************************************************************)

        Step                                                                << RUNG 30  STEP #0091 >>
Reset/  down            Reset
Lamp    push            setting
test    button  Step 0  encoder
 S03H    S02H   STEP_0
%I0007  %I0006  %M0100  %T0204                                  %M0209
──┤ ├────┤ ├────┤/├────┤/├──────────────────────────────────────( )──  (* Setting encoder                    *)
                         0033                                            Cross reference for %M0209
                                                                         -] [- 30,31
Setting                                                                  -]/[- 32,34
encoder

%M0209
──┤ ├──────────
 0030

Setting                                                                  << RUNG 31  STEP #0097 >>
encoder

%M0209                                                          %T0203
──┤ ├──┌──────┐──────────────────┌──────┐──────────────────────────(^)──  (* Pulse  1 sec                       *)
 0030  │ADD_  │                  │GE_   │                                  Cross reference for %T0203
       │INT   │                  │INT   │                                  -] [- 32,33
Pulse                Pulse   Pulse
1 sec                1 sec   1 sec
%R0437 ─I1   Q─%R0437  %R0437 ─I1   Q─
 CONST ─I2            CONST ─I2
 +00001                +01000

Pulse                                                                    << RUNG 32  STEP #0101 >>
1 sec

%T0203
──┤ ├──────────┌──────┐─
 0031          │MOVE_ │
               │INT   │
Setting                 Pulse
encoder                 1 sec
%M0209
──┤/├──  CONST ─IN   Q─%R0437
 0030   +00000  LEN
                00001

Pulse                                                                    << RUNG 33  STEP #0104 >>
1 sec

%T0203                                                          %T0204
──┤ ├──┌──────┐──────────────────┌──────┐──────────────────────────(^)──  (* Reset setting encoder            *)
 0031  │ADD_  │                  │GE_   │                                  Cross reference for %T0204
       │INT   │                  │INT   │                                  -] [- 34
Reset                Reset   Reset                                       -]/[- 30
setting              setting setting
encoder              encoder encoder
%R0438 ─I1   Q─%R0438  %R0438 ─I1   Q─
 CONST ─I2            CONST ─I2
 +00001                +00300

Reset                                                                    << RUNG 34  STEP #0108 >>
setting
encoder

%T0204
──┤ ├──────────┌──────┐─
 0033          │MOVE_ │
               │INT   │
Setting                 Reset
encoder                 setting
                        encoder
%M0209
──┤/├──  CONST ─IN   Q─%R0438
 0030   +00000  LEN
                00001
```

```
06-16-03  10:35                    GE FANUC SERIES 90-30/90-20/MICRO (v9.02)                    Page   115
                                        Tetra Cap Applicator 47 -0100
                                  48463-0001 ELD 001 AD 030612 JNT ECM:135545

ALW_ON                                                                  AV_10   << RUNG 35  STEP #0111 >>
%S0007                                                                 %M0211
──┤ ├──┌──────┐──────────────────────────────────────────────────────( )──  (* Zero pos angle encoder          *)
        │ EQ_  │                                                              Cross reference for AV_10
        │ INT  │                                                              -] [- 101
 CONST ─│I1  Q │─
 +00000 │      │
        │      │
Angle   │      │
encoder │      │
        │      │
%R0369 ─│I2    │
        └──────┘

ALW_ON                                                                  AV_11   << RUNG 36  STEP #0114 >>
%S0007                                                                 %M0212
──┤ ├──┌──────┐──────────────────────────────────────────────────────( )──  (* -5 pos angle encoder            *)
        │RANGE │                                                              Cross reference for AV_11
        │ INT  │                                                              -] [- 68
 CONST ─│L1  Q │─
 +00251 │      │
        │      │
 CONST ─│L2    │
 +00255 │      │
        │      │
Angle   │      │
encoder │      │
        │      │
%R0369 ─│IN    │
        └──────┘

ALW_ON                                                                  AV_12   << RUNG 37  STEP #0117 >>
%S0007                                                                 %M0213
──┤ ├──┌──────┐──────────────────────────────────────────────────────( )──  (* +5 pos angle encoder            *)
        │RANGE │                                                              Cross reference for AV_12
        │ INT  │                                                              -] [- 69
 CONST ─│L1  Q │─
 +00001 │      │
        │      │
 CONST ─│L2    │
 +00005 │      │
        │      │
Angle   │      │
encoder │      │
        │      │
%R0369 ─│IN    │
        └──────┘

Program: D484631                    C:\LM90\TCAP47\D484631                    Block: 1T0001(SUBR 01)
```

EM1.1TH900627en.fm

```
06-16-03  10:35                    GE FANUC SERIES 90-30/90-20/MICRO (v9.02)                    Page   116
                                          Tetra Cap Applicator 47 -0100
                                   48463-0001 ELD 001 AD 030612 JNT ECM:135545

 (*************************************************************************)
 (*                                                                       *)
 (* CHECK ENCODER                                                         *)
 (*                                                                       *)
 (*************************************************************************)

 >>>>
```

```
06-16-03  10:35                    GE FANUC SERIES 90-30/90-20/MICRO (v9.02)                    Page   117
                                        Tetra Cap Applicator 47 -0100
                                   48463-0001 ELD 001 AD 030612 JNT ECM:135545

 >>>>
```

```
06-16-03  10:35                    GE FANUC SERIES 90-30/90-20/MICRO (v9.02)                    Page   118
                                          Tetra Cap Applicator 47 -0100
                                   48463-0001 ELD 001 AD 030612 JNT ECM:135545

 >>>>
```

```
06-16-03  10:35                    GE FANUC SERIES 90-30/90-20/MICRO (v9.02)                    Page   119
                                        Tetra Cap Applicator 47 -0100
                                   48463-0001 ELD 001 AD 030612 JNT ECM:135545

ALW_ON                                                                          << RUNG 60  STEP #0168 >>
%S0007                                                          %T0141
 ─┤ ├─ EQ_                                                      ─(^)─  (* Pulse reset encoder check        *)
        INT                                                              Cross reference for %T0141
                                                                         -] [- 61
Angle
encoder
%R0369 ─ I1   Q
 CONST ─ I2
 +00001

Pulse                                                                   << RUNG 61  STEP #0171 >>
reset
encoder
check

%T0141
 ─┤ ├─ MOVE_
 0060    INT
                Check
                encoder
                passing
                0
 CONST ─ IN   Q ─ %R0783
 +00000   LEN
          00001

 >>>>
```

```
06-16-03  10:35                    GE FANUC SERIES 90-30/90-20/MICRO (v9.02)                    Page   120
                                        Tetra Cap Applicator 47 -0100
                                   48463-0001 ELD 001 AD 030612 JNT ECM:135545

 (*************************************************************************)
 (*                                                                       *)
 (* ALARM ENCODER.                                                        *)
 (*                                                                       *)
 (*************************************************************************)

        Reset                                                          << RUNG 67  STEP #0184 >>
Angle   alarm
encoder angle
OK      encoder Step 1
ENC_OK          STEP_1
%M0701  %T0205  %M0101                                   %M0710
──┤/├────┤/├────┤ ├──────────────────────────────────────( )──  (* Alarm angle encoder              *)
 0059    0070                                                      Cross reference for %M0710
                                                                   -] [- 67,68,69
Alarm
angle
encoder

%M0710
──┤ ├──┘
 0067

-5 pos  Alarm                                                      << RUNG 68  STEP #0189 >>
angle   angle
encoder encoder
 AV_11
%M0212  %M0710                                           %M0712
──┤ ├────┤ ├──────────────────────────────────────────────( )──  (* -5 pos angle encoder             *)
 0036    0067                                                      Cross reference for %M0712
                                                                   -] [- 68,70
-5 pos
angle
encoder

%M0712
──┤ ├──┘
 0068

+5 pos  Alarm                                                      << RUNG 69  STEP #0193 >>
angle   angle
encoder encoder
 AV_12
%M0213  %M0710                                           %M0713
──┤ ├────┤ ├──────────────────────────────────────────────( )──  (* +5 pos angle encoder             *)
 0037    0067                                                      Cross reference for %M0713
                                                                   -] [- 69,70
+5 pos
angle
encoder

%M0713
──┤ ├──┘
 0069

-5 pos  +5 pos                                                     << RUNG 70  STEP #0197 >>
angle   angle
encoder encoder

%M0712  %M0713                                           %T0205
──┤ ├────┤ ├──────────────────────────────────────────────(^)──  (* Reset alarm angle encoder        *)
 0068    0069                                                      Cross reference for %T0205
                                                                   -]/[- 67
```

EM1.1TH900627en.fm

```
06-16-03  10:35                    GE FANUC SERIES 90-30/90-20/MICRO (v9.02)                    Page   121
                                        Tetra Cap Applicator 47 -0100
                                   48463-0001 ELD 001 AD 030612 JNT ECM:135545

 (*****************************************************************************)
 (*                                                                           *)
 (* HOT MELT VALVE                                                            *)
 (*                                                                           *)
 (*****************************************************************************)

Been in Synch   Cap in                                                        << RUNG 72  STEP #0201 >>
Step 3  pos     index   Main    Index
not     hotmelt wheel   motor   out of
below 2 part 1  pos 2   speed 2 pos.
         AV_4    CAP_2  G002_S1                                   Y141
%M0107  %M0203  %M0402  %Q0019  %M0615                          %Q0008
──┤ ├────┤ ├────┤ ├──────┤ ├──────┤/├──────────────────────────────( )──  (* Hotmelt valve                    *)
        0020                                                                  Cross reference for Y141
        Synch                                                                 FBIO  (112)
        pos
        hotmelt
        part 2
         AV_13
        %M0216
          ──┤ ├──
          0026

Been in Synch   Cap in                                                        << RUNG 73  STEP #0209 >>
Step 3  pos     carrier Main    Index
not     hotmelt chain   motor   out of
below 2 dot     pos 3   speed 2 pos.
         AV_14   CAP_3  G002_S1                                   Y142
%M0107  %M0218  %M0403  %Q0019  %M0615                          %Q0007
──┤ ├────┤ ├────┤ ├──────┤ ├──────┤/├──────────────────────────────( )──  (* Hotmelt dot                      *)
        0027                                                                  Cross reference for Y142
        Spare                                                                 FBIO  (112)

         AV_15
        %M0219
          ──┤ ├──
          0028
```

EM1.1TH900627en.fm

```
06-16-03  10:35                    GE FANUC SERIES 90-30/90-20/MICRO (v9.02)                    Page   122
                                        Tetra Cap Applicator 47 -0100
                                   48463-0001 ELD 001 AD 030612 JNT ECM:135545

 (*************************************************************************)
 (*                                                                       *)
 (* CAP DETECTOR                                                          *)
 (*                                                                       *)
 (*************************************************************************)

Cap in                                                                << RUNG 75  STEP #0218 >>
carrier Main    Cap in
chain   motor   carrier
pos 7   speed 2 chain
 CAP_7  G002_S1
%M0407  %Q0019  %M0960                                        %M0959
──┤ ├────┤/├────┤/├──────────────────────────────────────────( )──  (* Cap in carrier chain            *)
         |       0077                                                 Cross reference for %M0959
Cap in   |                                                            -] [- 75,76
carrier  |
chain    |
pos 8    |
 CAP_8   |
%M0408   |
──┤ ├────┤
         |
Cap in   |
carrier  |
chain    |
pos 9    |
 CAP_9   |
%M0409   |
──┤ ├────┤
         |
Cap in   |
carrier  |
chain    |
pos 10   |
CAP_10   |
%M0410   |
──┤ ├────┘
         |
Cap in   |
carrier  |
chain    |
         |
%M0959   |
──┤ ├────┘
 0075

Cap in          Cap in                                                << RUNG 76  STEP #0226 >>
carrier         carrier
chain   Inching chain
         S05H
%M0959  %I0008  %M0960                                        %T0123
──┤ ├────┤ ├────┤/├──────────────────────────────────────────(^)──  (* Pulse cap in carrier chain      *)
 0075            0077                                                 Cross reference for %T0123
                                                                      -] [- 77

Pulse   Reset                                                         << RUNG 77  STEP #0230 >>
cap in  packIn
carrier carrier With
chain   chain   Cap

%T0123  %M0961  %M0210                                        %M0960
──┤ ├────┤/├────┤ ├──────────────────────────────────────────( )──  (* Cap in carrier chain            *)
 0076    0084                                                         Cross reference for %M0960
         |                                                            -] [- 77,78
Cap in   |                                                            -]/[- 75,76
carrier  |
chain    |
         |
%M0960   |
──┤ ├────┘
 0077

Cap in  Synch                                                         << RUNG 78  STEP #0235 >>
carrier pos
chain   infeed  Inching
         AV_1    S05H
%M0960  %M0200  %I0008                                        %T0200
──┤ ├────┤ ├────┤ ├──────────────────────────────────────────(^)──  (* Pulse noPack in chain           *)
 0077    0017                                                         Cross reference for %T0200
                                                                      -] [- 79

Program: D484631                   C:\LM90\TCAP47\D484631                    Block: 1T0001(SUBR 01)
```

EM1.1TH900627en.fm

```
06-16-03  10:35                    GE FANUC SERIES 90-30/90-20/MICRO (v9.02)                    Page   123
                                        Tetra Cap Applicator 47 -0100
                                   48463-0001 ELD 001 AD 030612 JNT ECM:135545

Pulse                                                                          << RUNG 79  STEP #0239 >>
noPack
in
chain

%T0200                                                          %M0963
 0078  >UPCTR                                                    ( )    (* No pack in carrier chain         *)
Reset                                                                   Cross reference for %M0963
packIn                                                                  -] [- 81
carrier                                                                 -]/[- 82
chain

%M0961
 0084  R

CONST
+00003  PV

        No pack
        in
        carrier
        chain

        %R0268

 >>>>
```

```
06-16-03  10:35                    GE FANUC SERIES 90-30/90-20/MICRO (v9.02)                    Page   124
                                        Tetra Cap Applicator 47 -0100
                                   48463-0001 ELD 001 AD 030612 JNT ECM:135545

Start                                                                          << RUNG 84  STEP #0255 >>
eject
package

%M0962                                                          %M0961
 0082    MOVE_                                                   (RM)-  (* Reset packIn carrier chain       *)
          INT                                                            Cross reference for %M0961
                                                                         -] [- 79
                                                                         -]/[- 77
                Reset                                                    -(SM) 83
                packIn
                carrier
                chain

 CONST  IN  Q  %R1001
 +00000  LEN
         00001

Detect                                          Alarm                  << RUNG 85  STEP #0258 >>
of      Detect                                  queue
missing of      Infeed          Extern  cap
Cap     package conv    Step 1  package detect
 B180    B181    K001   STEP_1  ejector
%I0034  %I0035  %Q0017 %M0101  %M0210  %Q0029  %M0824          %M0799
 0092                                                            ( )-  (* Missing Cap on package          *)
                                                                         Cross reference for %M0799
Start                                                                    -] [- 86
eject                                                                    -]/[- 87
package

%M0962
 0082

Missing
Cap on
package

%M0800
 0087

Missing                                                                << RUNG 86  STEP #0268 >>
Cap on
package

%M0799                                                          %M0800
 0085    ADD_                    GE_                             (SM)-  (* Missing Cap on package          *)
          INT                     INT                                    Cross reference for %M0800
                                                                         -] [- 85,88,97
Missing         Missing Missing                                          -]/[- 95
Cap on          Cap on  Cap on                                           -(RM) 87
package         package package

%R1006  I1  Q  %R1006  %R1006  I1  Q

 CONST  I2              CONST  I2
 +00001                 +00170

Missing                                                                << RUNG 87  STEP #0272 >>
Cap on
package

%M0799                                                          %M0800
 0085    MOVE_                                                   (RM)-  (* Missing Cap on package          *)
          INT                                                            Cross reference for %M0800
                                                                         -] [- 85,88,97
                Missing                                                  -]/[- 95
                Cap on                                                   -(SM) 86
                package

 CONST  IN  Q  %R1006
 +00000  LEN
         00001

Detect  Missing                                                        << RUNG 88  STEP #0275 >>
of      Cap on
package package
 B181
%I0035  %M0800                                                  %M0805
         0087                                                    ( )-  (* Start package ejector           *)
                                                                         Cross reference for %M0805
Start   Package                                                          -] [- 88,89,91
package ejector                                                          -]/[- 90,93
ejector ready

%M0805  %M0810
 0088    0090

Program: D484631                   C:\LM90\TCAP47\D484631                       Block: 1T0001(SUBR 01)
```

EM1.1TH900627en.fm

```
06-16-03  10:35                    GE FANUC SERIES 90-30/90-20/MICRO (v9.02)                    Page   125
                                        Tetra Cap Applicator 47 -0100
                                  48463-0001 ELD 001 AD 030612 JNT ECM:135545

Start                                                                          << RUNG 89  STEP #0281 >>
package
ejector

%M0805                                                                  %M0810
 0088     ADD_                          GE_                             (SM)-  (* Package ejector ready          *)
          INT                           INT                                    Cross reference for %M0810
                                                                               -] [- 93
Package   Package  Package                                                     -]/[- 88,91
eject     eject    eject                                                       -(RM) 90
ready     ready    ready

%R1002 - I1   Q - %R1002  %R1002 - I1   Q
CONST - I2                CONST - I2
+00001            +00300

Start                                                                          << RUNG 90  STEP #0285 >>
package
ejector

%M0805                                                                  %M0810
 0088     MOVE_                                                          (RM)-  (* Package ejector ready          *)
          INT                                                                    Cross reference for %M0810
                                                                                 -] [- 93
          Package                                                                -]/[- 88,91
          eject                                                                  -(SM) 89
          ready

CONST - IN   Q - %R1002
+00000   LEN
         00001

Start   Package                                                                << RUNG 91  STEP #0288 >>
package ejector
ejector ready

%M0805  %M0810                                                          %M0811
 0088    0090     ADD_                          GE_                      ( )-   (* Extern package ejector         *)
                  INT                           INT                             Cross reference for %M0811
                                                                                -] [- 92
        Delay     Delay   Delay
        Extern    Extern  Extern
        package   package package
        ejector   ejector ejector

        %R1003 - I1   Q - %R1003  %R1003 - I1   Q
         CONST - I2                CONST - I2
         +00001            +00150

Extern                                                                         << RUNG 92  STEP #0293 >>
package
ejector

                                                                        Y920
%M0811                                                                  %Q0029
 0091                                                                   ( )-   (* Extern package ejector         *)
                                                                                Cross reference for Y920
                                                                                -] [- 92
Extern  Start                                                                   -]/[- 85
package eject
ejector package
 Y920
%Q0029  %M0962
 0092    0082

Start                                                                          << RUNG 93  STEP #0298 >>
package
ejector

%M0805
 0088     MOVE_
          INT

Package                 Delay
ejector                 Extern
ready                   package
                        ejector
%M0810
 0090    CONST - IN   Q - %R1003
         +00000   LEN
                  00001

 T_SEC                                                                         << RUNG 94  STEP #0301 >>
%S0005                                                                  %T0201
                                                                        (^)-   (* Pulse  1 sec                   *)
                                                                                Cross reference for %T0201
                                                                                -] [- 95

Program: D484631                   C:\LM90\TCAP47\D484631                      Block: 1T0001(SUBR 01)
```

EM1.1TH900627en.fm

```
06-16-03  10:35                    GE FANUC SERIES 90-30/90-20/MICRO (v9.02)                    Page   126
                                        Tetra Cap Applicator 47 -0100
                                   48463-0001 ELD 001 AD 030612 JNT ECM:135545

Missing                                                                          << RUNG 95  STEP #0303 >>
Cap on  Pulse
package 1 sec

%M0800  %T0201                                                   %M0815
 0087    0094     ADD_                    GE_                    ( )   (* Check missing Cap on package     *)
                  INT                     INT                            Cross reference for %M0815
                                                                         -] [- 96,99
         Check   Check   Check                                           -]/[- 97
         missed  missed  missed
         cap on  cap on  cap on
         package package package

         %R1004 I1   Q  %R1004  %R1004 I1   Q
                                                
          CONST I2              CONST I2
          +00001                +00060

Check                                                                            << RUNG 96  STEP #0308 >>
missing
Cap on
package

%M0815
 0095     MOVE_
          INT

          Check
          missed
          cap on
          package

 CONST IN   Q  %R1004
 +00000  LEN
         00001

                  Check                                                          << RUNG 97  STEP #0310 >>
         Missing  missing
Step 2   Cap on   Cap on
STEP_2   package  package
%M0102  %M0800   %M0815                                          %T0202
 0087    0087     0095                                           (^)   (* Count missing Cap on package     *)
                                                                         Cross reference for %T0202
                                                                         -] [- 98

Count                                                                            << RUNG 98  STEP #0314 >>
missing
Cap on
package

%T0202                                                           %M0816
 0097     ADD_                    GE_                            (SM)  (* Alarm missing Cap on package     *)
          INT                     INT                                    Cross reference for %M0816
                                                                         -]/[- 99
Count    Count   Count                                                   -(RM) 99
missing  missing missing
Cap on   Cap on  Cap on
package  package package

%R1007 I1   Q  %R1007  %R1007 I1   Q
                                                
 CONST I2              CONST I2
 +00001                +00003

Check   Alarm                                                                    << RUNG 99  STEP #0318 >>
missing missing
Cap on  Cap on
package package

%M0815  %M0816                                                   %M0816
 0095    0098     MOVE_                                          (RM)  (* Alarm missing Cap on package     *)
                  INT                                                    Cross reference for %M0816
                                                                         -]/[- 99
Pulse                                                                    -(SM) 98
Alarm                                                
Reset                                                
 S03H_                                                
%T0004                                                
                                                
                                                
```

```
06-16-03  10:35                    GE FANUC SERIES 90-30/90-20/MICRO (v9.02)                    Page   127
                                        Tetra Cap Applicator 47 -0100
                                   48463-0001 ELD 001 AD 030612 JNT ECM:135545

 (*****************************************************************************)
 (*                                                                           *)
 (* CHECK MACHINE SPEED                                                       *)
 (*                                                                           *)
 (*****************************************************************************)

Zero                                                                  << RUNG 101  STEP #0324 >>
pos
angle
encoder
 AV_10
%M0211                                                      %T0142
──┤ ├──────────────────────────────────────────────────────(^)──  (* Pulse zero angle encoder          *)
 0035                                                                 Cross reference for %T0142
                                                                      -] [- 103,105,106,107
                                                                      -]/[- 104

Start                                                                 << RUNG 102  STEP #0326 >>
main
motor
speed 1
G002_SF
%Q0023
──┤ ├──────┬──────────────────────────────────────┬──
           │ MOVE_                                │ REAL_
           │  REAL                                │  TO_
           │                                      │  DINT
           │                                      │
           │          1 hour          1 hour      │      1 hour
           │          ms              ms          │      ms
           │                                      │
           │   CONST ─ IN  Q ─ %R0786             │ %R0786 ─ IN  Q ─ %R0790
           │ +3600000. LEN                        │
           │           00001                      │

Start   Pulse                                                         << RUNG 103  STEP #0329 >>
main    zero
motor   angle
speed 1 encoder
G002_SF
%Q0023  %T0142
──┤ ├────┤ ├──┬──
         0101  │ DIV_
               │ DINT
               │
               │          Speed
               │          main
               │ 1 hour   motor
               │ ms       rph
               │
               │ %R0790 ─ I1  Q ─ %R0784
               │
               │ 1
               │ package
               │ ms
               │
               │ %R0788 ─ I2

Start   Pulse                                                         << RUNG 104  STEP #0332 >>
main    zero
motor   angle
speed 1 encoder
G002_SF
%Q0023  %T0142
──┤ ├────┤/├──┬──
         0101  │ ADD_
               │ INT
               │
               │ 1        1
               │ package  package
               │ ms       ms
               │
               │ %R0788 ─ I1  Q ─ %R0788
               │
               │  CONST ─ I2
               │  +00001
```


EM1.1TH900627en.fm

```
06-16-03  10:35                    GE FANUC SERIES 90-30/90-20/MICRO (v9.02)                    Page   128
                                        Tetra Cap Applicator 47 -0100
                                 48463-0001 ELD 001 AD 030612 JNT ECM:135545

Pulse                                                                          << RUNG 105  STEP #0335 >>
zero
angle
encoder

%T0142
 0101      MOVE_
            INT

                1
                package
                ms

 CONST     IN   Q   %R0788
 +00000     LEN
            00001

Pulse   Start                                                                  << RUNG 106  STEP #0337 >>
zero    main
angle   motor
encoder speed 1
        G002_SF
%T0142  %Q0023                                                   %T0143
 0101    >UPCTR                                                   (^)   (* Pulse 10 machine cycles          *)
Start                                                                   Cross reference for %T0143
main                                                                    -] [- 106,109,110
motor
speed 1
G002_SF
%Q0023
          R

Pulse
10
machine
cycles

%T0143
 0106     CONST    PV
          +00010

                10
                machine
                cycles

                %R0796

Pulse   Start                                                                  << RUNG 107  STEP #0343 >>
zero    main
angle   motor
encoder speed 1
        G002_SF
%T0142  %Q0023
 0101      ADD_
            DINT

        10                  10
        machine             machine
        cycles              cycles

        %R0792    I1   Q    %R0792

        Speed
        main
        motor
        rph

        %R0784    I2
```

EM1.1TH900627en.fm

```
06-16-03  10:35                    GE FANUC SERIES 90-30/90-20/MICRO (v9.02)                    Page   129
                                        Tetra Cap Applicator 47 -0100
                                   48463-0001 ELD 001 AD 030612 JNT ECM:135545

 >>>>
```

```
06-16-03  10:35                    GE FANUC SERIES 90-30/90-20/MICRO (v9.02)                    Page   130
                                          Tetra Cap Applicator 47 -0100
                                   48463-0001 ELD 001 AD 030612 JNT ECM:135545

 >>>>
```

```
06-16-03  10:35                          GE FANUC SERIES 90-30/90-20/MICRO (v9.02)                          Page   131
                                              Tetra Cap Applicator 47 -0100
                                         48463-0001 ELD 001 AD 030612 JNT ECM:135545

==============================================================================
==========  GLOBAL  (%G)  GLOBAL CROSS REFERENCES
==============================================================================
REF.     BLOCK    NICKNAME   REF. DESCRIPTION / CROSS REFERENCES
-------  -------  -------- -------------------------------------
%G0001   PLMS_5            No PLMS alarm
                           -] [- 45,47,49,51,53,55,57,59,61,63,65,67,69,71,75,77,79,81,82,84,85,87,89,91,93,95,101,103,105,107,111,
                                 113,114,119,121,123,125
                           -(M)  43
%G0002   PLMS_5            Manual step down
                           -] [- 109,111
                           -(SM) 110
                           -(RM) 109
%G0003   PLMS_5            DE Ext signal enable
                           -] [- 16,30,31,43,45,47,49,51,53,55,57,59,61,63,65,67,69,71,75,77,79,81,82,84,85,87,89,91,93,95,101,103,
                                 105,107,111,113,114,118,119,121,123,125,127,132,134,138,140,141
                           -]/[- 12,13,127,135,142
                           -(M)  8
%G0004   PLMS_5            DE Prod time
                           -] [- 12,13,45,47,49,51,53,55,57,59,61,63,65,67,69,71,75,77,79,81,84,87,89,91,93,95,100,103,105,110,113,
                                 121,123,125
                           -]/[- 11,82,85,107,109,111,114,119
                           -(SM) 16
                           -(RM) 127
%G0005   PLMS_5            Ready for prod
                           -] [- 12,13
                           -(M)  11
%G0008   PLMS_5            Start DE prod time
                           -] [- 16
                           -(v)  15
%G0009   PLMS_5   B104_    Pulse package counter
                           -] [- 132
                           -(v)  130
%G0010   PLMS_5   B121_    Pulse package counter
                           -] [- 138
                           -(v)  137
%G0022   PLMS_5            No event in %R0922
                           -] [- 75,77,79,81,82,84,85,87,89,91,93,95,100,101,103,105,107,110,111,113,114,118,119,121,123,125
                           -(M)  73
%G0023   PLMS_5            No event in %R0923
                           -] [- 100,101,103,105,107,110,111,113,114,118,119,121,123,125
                           -(M)  97
%G0024   PLMS_5            No event in %R0924
                           -] [- 118,119,121,123,125
                           -(M)  116
%G0033   PLMS_5            Break enable signal
                           -]/[- 8
                           -(M)  6
%G0040   PLMS_5            No rotate In-feed memory
                           -] [- 81,82
                           -(M)  81
%G0041   PLMS_5            Superv air press
                           -] [- 100,101
                           -(M)  100
%G0044   PLMS_5            Queue outfeed memory
                           -] [- 105,107
                           -(M)  106
%G0045   PLMS_5            Low lev paddle elevat memory
                           -] [- 113,114
                           -(M)  113
%G0046   PLMS_5            Low level In-feed memory
                           -] [- 119
                           -(M)  118
%G0047   PLMS_5            No cap queue memory
                           -] [- 84,85
                           -(M)  84
%G0050   PLMS_5            Pulse package ejector
                           -] [- 140
                           -(^)  139
%G0051   PLMS_5            Pulse DE enable on
                           -] [- 145,146
                           -(^)  144

==============================================================================
==========  INPUT  (%I)  GLOBAL CROSS REFERENCES
==============================================================================
REF.     BLOCK    NICKNAME   REF. DESCRIPTION / CROSS REFERENCES
-------  -------  -------- -------------------------------------
%I0001   _MAIN    L12        Em stop
                           -] [- 23,211,216,218,305,308,310,358
                           -]/[- 213,215,358
%I0002   _MAIN               Em stop circuit
                           -] [- 23,208,216,218,305,308,310,358
                           -]/[- 213,215
%I0003   _MAIN    MOTORS     Motor prot
                           -] [- 23,69,81
                           -]/[- 219,221
%I0004   _MAIN    B100       Air press switch
                           -] [- 40,192,197,224,227
                           -]/[- 20,32,223
         PLMS_5            -]/[- 100
%I0005   _MAIN    S01H       Step up push button
                           -] [- 17
%I0006   _MAIN    S02H       Step down push button

Program: D484631                         C:\LM90\TCAP47\D484631                                  Global Cross Reference Tables
```

```
06-16-03  10:35                          GE FANUC SERIES 90-30/90-20/MICRO (v9.02)                          Page   132
                                                Tetra Cap Applicator 47 -0100
                                          48463-0001 ELD 001 AD 030612 JNT ECM:135545

REF.     BLOCK    NICKNAME   REF. DESCRIPTION / CROSS REFERENCES
-------  -------  -------- ------------------------------------
                           -] [- 19,20
                           -]/[- 18
         1T0001            -] [- 30
%I0007   _MAIN    S03H     Reset/ Lamp test
                           -] [- 211,362,363
         1T0001            -] [- 30
%I0008   _MAIN    S05H     Inching
                           -] [- 45,81,83,238
                           -]/[- 84,100
         1T0001            -] [- 76,78
%I0009   _MAIN    S07H     Choice cap-  no cap
                           -] [- 51
%I0010   _MAIN    S015H    Extra Lubric.
                           -] [- 201
%I0011   _MAIN    K02      Check K002
                           -] [- 236
                           -]/[- 133,236
%I0012   _MAIN    S115     In- feeder Restart
                           -] [- 211,306
%I0013   _MAIN    L13      Door applicator
                           -] [- 23,69,81,88,211,238,307,316,358
                           -]/[- 216,218,358
         PLMS_5            -] [- 138
%I0014   _MAIN             Door applicator circuit
                           -] [- 24,81,209,238,307,358
                           -]/[- 216,218
%I0015   _MAIN    B901     Ext hose brake sensor1
                           -] [- 204,257
                           -]/[- 70,72
%I0016   _MAIN    B902     Ext hose brake sensor2
                           -] [- 203,257
                           -]/[- 70
%I0017   1T0001            Angle encoder
                           -] [- 15
                           -]/[- 15
                           FBIO  5
%I0018   1T0001            Angle encoder
                           -] [- 14
                           -]/[- 14
                           FBIO  (5)
%I0019   1T0001            Angle encoder
                           -] [- 13
                           -]/[- 13
                           FBIO  (5)
%I0020   1T0001            Angle encoder
                           -] [- 12
                           -]/[- 12
                           FBIO  (5)
%I0021   1T0001            Angle encoder
                           -] [- 11
                           -]/[- 11
                           FBIO  (5)
%I0022   1T0001            Angle encoder
                           -] [- 10
                           -]/[- 10
                           FBIO  (5)
%I0023   1T0001            Angle encoder
                           -] [- 9
                           -]/[- 9
                           FBIO  (5)
%I0024   1T0001            Angle encoder
                           -] [- 8
                           FBIO  (5)
%I0025   _MAIN    B903     Lower infeed
                           -] [- 114,115,244,256
                           -]/[- 70,72,113,116,187,257
         1T0001            FBIO  (5)
%I0026   _MAIN    B904     Upper infeed
                           -]/[- 72,244
         1T0001            FBIO  (5)
%I0027   _MAIN    B104     Package at belt brake disch
                           -] [- 116,122,125,130,172,177
                           -]/[- 78,115,122,256
         PLMS_5            -] [- 15,130
         1T0001            FBIO  (5)
%I0028   _MAIN    B925     Package to infeed conv
                           -]/[- 70,72
         1T0001            FBIO  (5)
%I0029   _MAIN    B189     Cap on carrier before index
                           -]/[- 316
         1T0001            FBIO  (5)
%I0030   _MAIN    B129     Lead rail in upper pos
                           -]/[- 312
         1T0001            FBIO  (5)
%I0031   _MAIN    L14      Doors in- feeder
                           -] [- 89,162,163,322
                           -]/[- 305,308,310,324,358
         1T0001            FBIO  (5)
%I0032   _MAIN             Doors in- feeder circuit
                           -] [- 162,163,210,305,358
                           -]/[- 308,310
         1T0001            FBIO  5,(5)

Program: D484631                         C:\LM90\TCAP47\D484631                         Global Cross Reference Tables
```

EM1.1TH900627en.fm

```
06-16-03  10:35                          GE FANUC SERIES 90-30/90-20/MICRO (v9.02)                          Page   133
                                              Tetra Cap Applicator 47 -0100
                                         48463-0001 ELD 001 AD 030612 JNT ECM:135545

REF.     BLOCK    NICKNAME   REF. DESCRIPTION / CROSS REFERENCES
-------  -------  -------- -------------------------------------
%I0033   _MAIN    B121     Outfeed jammed
                           -] [- 43,69,183,188,265,266
         PLMS_5            -] [- 137
         1T0001            FBIO  6
%I0034   1T0001   B180     Detect of missing Cap
                           -]/[- 85
                           FBIO  (6)
%I0035   _MAIN    B181     Detect of package
                           -] [- 43,69,292
         1T0001            -] [- 85
                           -]/[- 88
                           FBIO  (6)
%I0036   _MAIN    B142     Lubric press
                           -] [- 198
                           -]/[- 197,201
         1T0001            FBIO  (6)
%I0037   _MAIN    B143     Lubric oil level
                           -] [- 191,196,340,342
                           -]/[- 199,344,350
         1T0001            FBIO  (6)
%I0038   _MAIN    B905     Queue outfeed left
                           -] [- 188,248
         PLMS_5            -] [- 105
         1T0001            FBIO  (6)
%I0039   _MAIN    B198     Low level paddle elevat
                           -] [- 270,277
                           -]/[- 282
         1T0001            FBIO  (6)
%I0040   _MAIN    B199     Low level In- feeder
                           -] [- 148,272,278,282
                           -]/[- 149,326
         1T0001            FBIO  (6)
%I0041   _MAIN    B191     Cap pusher rear pos
                           -] [- 184
                           -]/[- 296
         1T0001            FBIO  (6)
%I0042   _MAIN    B192     Cap pusher front pos
                           -] [- 286
                           -]/[- 184,297
         1T0001            FBIO  (6)
%I0043   _MAIN    B193     Cap at index
                           -] [- 169,175
                           -]/[- 282,286
         1T0001            FBIO  (6)
%I0044   _MAIN             Hotmelt unit ready
                           -] [- 32,75
                           -]/[- 253,255
         1T0001            FBIO  (6)
%I0045   _MAIN    G010_MB  No freq. alarm
                           -] [- 40
                           -]/[- 238,240
         1T0001            FBIO  (6)
%I0046   _MAIN    B196     Cap conv max queue
                           -] [- 42,146,283,328
                           -]/[- 147,272,282
         1T0001            FBIO  (6)
%I0047   _MAIN    B197     Cap conv min queue
                           -] [- 42,171,284
                           -]/[- 92,170,282,330
         1T0001            FBIO  (6)
%I0048   1T0001            FBIO  6,(6)
%I0049   _MAIN    S116H    Empty- ing  In- feeder
                           -] [- 150
                           -]/[- 151
%I0050   _MAIN    B200     Cap chute closed
                           -] [- 34,41,159
                           -]/[- 152,335,337
%I0051   _MAIN    B201     Rotate guard In- feeder
                           -] [- 320
%I0052   _MAIN    X090_5   Start conv from up stream
                           -]/[- 70
%I0053   _MAIN    X090_1   Run enable down s left
                           -] [- 189
%I0054   _MAIN    B202     Lead rail lower pos
                           -]/[- 312
%I0056   _MAIN    A80_A81  Check pre heater
                           -] [- 338
%I0057   _MAIN    F000     Surge filter
                           -]/[- 232
%I0058   _MAIN    X090_7   Run enable down s right
                           -] [- 189
%I0059   _MAIN    B916     Switch in right line
                           -] [- 56,188,189,248
                           -]/[- 57,188,189,248
         PLMS_5            -] [- 105
                           -]/[- 105
%I0060   _MAIN    B917     Queue outfeed right
                           -] [- 188,248
         PLMS_5            -] [- 105
%I0061   _MAIN    B918     Low speed right line
                           -] [- 56
%I0062   _MAIN    B906     Low speed left line

Program: D484631                         C:\LM90\TCAP47\D484631                         Global Cross Reference Tables
```

```
06-16-03  10:35                          GE FANUC SERIES 90-30/90-20/MICRO (v9.02)                          Page   134
                                                Tetra Cap Applicator 47 -0100
                                          48463-0001 ELD 001 AD 030612 JNT ECM:135545

REF.     BLOCK    NICKNAME   REF. DESCRIPTION / CROSS REFERENCES
-------  -------  -------- -------------------------------------
                           -] [- 57
%I0064   _MAIN    K03      Check K003
                           -] [- 237
                           -]/[- 237

==============================================================================
==========  OUTPUT  (%Q)  GLOBAL CROSS REFERENCES
==============================================================================
REF.     BLOCK    NICKNAME   REF. DESCRIPTION / CROSS REFERENCES
-------  -------  -------- -------------------------------------
%Q0001   _MAIN    Y108     Drying air nozzle
                           -( )  144
         1T0001            FBIO  112
%Q0002   _MAIN    Y160     Pusher,cap to index
                           -] [- 184,297
                           -]/[- 185,296
                           -( )  184
         1T0001            FBIO  (112)
%Q0003   _MAIN    Y161     Cap blow conv
                           -( )  185
         1T0001            FBIO  (112)
%Q0004   _MAIN    Y162     Cap blow In- feeder
                           -( )  167
         1T0001            FBIO  (112)
%Q0005   _MAIN    Y100     Main air valve
                           -] [- 222
                           -]/[- 224
                           -( )  48
         1T0001            FBIO  (112)
%Q0006   1T0001            FBIO  (112)
%Q0007   1T0001   Y142     Hotmelt dot
                           -( )  73
                           FBIO  (112)
%Q0008   1T0001   Y141     Hotmelt valve
                           -( )  72
                           FBIO  (112)
%Q0009   _MAIN    K020     Paddle elevat
                           -] [- 277
                           -( )  155
         1T0001            FBIO  (112)
%Q0010   _MAIN    G010_SF  In- feeder forward
                           -] [- 148,155,278
                           -]/[- 162
                           -( )  161
         1T0001            FBIO  (112)
%Q0011   _MAIN    G010_SR  In- feeder reverse
                           -] [- 158
                           -]/[- 161
                           -( )  165
         1T0001            FBIO  (112)
%Q0012   _MAIN    K003     Freque. convert in- feeder
                           -] [- 237
                           -]/[- 237
                           -( )  89
         1T0001            FBIO  (112)
%Q0013   1T0001            FBIO  (112)
%Q0014   1T0001            FBIO  (112)
%Q0015   1T0001            FBIO  (112)
%Q0016   1T0001            FBIO  112,(112)
%Q0017   _MAIN    K001     Infeed conv
                           -] [- 109,114,123,188,256,257,265,292
                           -]/[- 43,133
                           -( )  71
         PLMS_5            -] [- 132,138,140
         1T0001            -] [- 85
%Q0018   _MAIN    K002     Freque. convert appli- cator
                           -] [- 82,85,122,175,236
                           -]/[- 236
                           -( )  88
%Q0019   _MAIN    G002_S1  Main motor speed 2
                           -] [- 49,102,144,187,296,297
                           -]/[- 45,70,90,97,103,118
                           -( )  87
         PLMS_5            -]/[- 6,127
         1T0001            -] [- 51,56,58,65,72,73
                           -]/[- 52,75
%Q0020   _MAIN    K004     Preheat nozzle element
                           -] [- 110,176,338
                           -( )  104,109
%Q0021   _MAIN    G005_SF  Start belt brake
                           -] [- 49,125,131,144,256
                           -]/[- 79
                           -(S)  123
                           -(R)  134
%Q0022   _MAIN    K022     Cap conv
                           -] [- 160,185
                           -( )  92
%Q0023   _MAIN    G002_SF  Start main motor speed 1
                           -] [- 91,92
                           -( )  86
         1T0001            -] [- 102,103,104,106,107,109
                           -]/[- 106,110

Program: D484631                         C:\LM90\TCAP47\D484631                         Global Cross Reference Tables
```

EM1.1TH900627en.fm

```
06-16-03  10:35                          GE FANUC SERIES 90-30/90-20/MICRO (v9.02)                          Page   135
                                              Tetra Cap Applicator 47 -0100
                                         48463-0001 ELD 001 AD 030612 JNT ECM:135545

REF.     BLOCK    NICKNAME   REF. DESCRIPTION / CROSS REFERENCES
-------  -------  -------- -------------------------------------
%Q0029   PLMS_5   Y920     Extern package ejector
                           -] [- 139
         1T0001            -] [- 92
                           -]/[- 85
                           -( )  92
%Q0030   _MAIN    Y114     Lubri- cation
                           -] [- 195
                           -( )  192
%Q0031   _MAIN    K098     Package coming
                           -( )  188
%Q0032   _MAIN    P001     Hour meter
                           -( )  49
%Q0033   _MAIN    K006     Hotmelt unit
                           -( )  94
%Q0034   _MAIN    K010     Fan preheat nozzle
                           -] [- 104
                           -( )  105,110
%Q0035   _MAIN    H116S    Empty In- feeder
                           -( )  153
%Q0036   _MAIN    B135_1   Lock doors
                           -] [- 90
                           -( )  91
%Q0037   _MAIN    B134_1   Lock tunnel
                           -( )  91
%Q0038   _MAIN    Y901     Ext hose brake
                           -( )  206
%Q0039   _MAIN    K019     Step 0
                           -( )  46
%Q0040   _MAIN    K099     Ready signal
                           -]/[- 70
                           -( )  187
%Q0041   _MAIN    A072_17  Synch pulse train
                           -( )  377
%Q0042   _MAIN    A072_18  Data 1, pulse train
                           -( )  378
%Q0043   _MAIN    A072_19  Data 2, pulse train
                           -( )  379
%Q0044   _MAIN    A072_20  Data 3, pulse train
                           -( )  380
%Q0045   _MAIN    H115S    Mech Feeder restart
                           -( )  311
%Q0046   _MAIN    H101_1   Warning lamp Blue
                           -( )  359
%Q0047   _MAIN    H101_2   Warning lamp Yellow
                           -] [- 359
                           -( )  360
%Q0048   _MAIN    H101_3   Warning lamp Red
                           -] [- 360
                           -( )  361
%Q0049   _MAIN             Emergency stop
                           -( )  208
%Q0050   _MAIN             Doors applicator
                           -( )  209
%Q0051   _MAIN             Doors in- feeder
                           -( )  210
%Q0052   _MAIN             Reset EMS relays
                           -( )  211

==============================================================================
==========  INTERNAL  (%M)  GLOBAL CROSS REFERENCES
==============================================================================
REF.     BLOCK    NICKNAME   REF. DESCRIPTION / CROSS REFERENCES
-------  -------  -------- -------------------------------------
%M0001   _MAIN    S_FLASH  Slow flash
                           -] [- 16,339
                           -]/[- 16
                           -( )  16
%M0003   _MAIN    FLASH    Flash
                           -] [- 14,15,43,45,215,218,221,227,230,235,240,243,247,252,255,261,264,269,276,281,291,295,301,304,310,
                                 315,319,325,334,337,339,357,359,360,361
                           -]/[- 14
                           -( )  14
%M0004   _MAIN             Ready to Step up
                           -] [- 18,27,30,32,41,43,69
                           -( )  24
%M0006   _MAIN             Lamp test
                           -] [- 153,311,359,360,361,372
                           -( )  362
%M0007   _MAIN             Delay Step down
                           -]/[- 28
                           -( )  20
%M0010   _MAIN             Extern brake queue length
                           -] [- 206
                           -]/[- 205
                           -( )  204
%M0011   _MAIN             Extern brake space betw q
                           -]/[- 206
                           -( )  205
%M0012   _MAIN             Extern brake queue to DE
                           -] [- 206
                           -( )  203
%M0013   _MAIN             Lubric inter- vall

Program: D484631                         C:\LM90\TCAP47\D484631                         Global Cross Reference Tables
```

```
06-16-03  10:35                    GE FANUC SERIES 90-30/90-20/MICRO (v9.02)                    Page   136
                                          Tetra Cap Applicator 47 -0100
                                     48463-0001 ELD 001 AD 030612 JNT ECM:135545

REF.     BLOCK    NICKNAME   REF. DESCRIPTION / CROSS REFERENCES
-------  -------  -------- -------------------------------------
                           -] [- 192,197
                           -( )  194
%M0014   _MAIN             Lubric finish
                           -] [- 194,196
                           -( )  195
%M0015   _MAIN             Fault no high lubric press
                           -] [- 193,197,199
                           -( )  197
%M0016   _MAIN             Fault no low lubric press
                           -] [- 198,199
                           -( )  198
%M0017   1T0001            Bit 1 angle encoder
                           -( )  15
                           FBIO  16
%M0018   1T0001            Bit 2 angle encoder
                           -] [- 15
                           -]/[- 15
                           -( )  14
                           FBIO  (16)
%M0019   1T0001            Bit 3 angle encoder
                           -] [- 14
                           -]/[- 14
                           -( )  13
                           FBIO  (16)
%M0020   1T0001            Bit 4 angle encoder
                           -] [- 13
                           -]/[- 13
                           -( )  12
                           FBIO  (16)
%M0021   1T0001            Bit 5 angle encoder
                           -] [- 12
                           -]/[- 12
                           -( )  11
                           FBIO  (16)
%M0022   1T0001            Bit 6 angle encoder
                           -] [- 11
                           -]/[- 11
                           -( )  10
                           FBIO  (16)
%M0023   1T0001            Bit 7 angle encoder
                           -] [- 10
                           -]/[- 10
                           -( )  9
                           FBIO  (16)
%M0024   1T0001            Bit 8 angle encoder
                           -] [- 9
                           -]/[- 9
                           -( )  8
                           FBIO  (16)
%M0025   1T0001            FBIO  (16)
%M0026   1T0001            FBIO  (16)
%M0027   _MAIN             Nmbr of lubric at low level
                           -]/[- 191
                           -( )  196
         1T0001            FBIO  (16)
%M0028   1T0001            FBIO  (16)
%M0029   _MAIN             Memory level lubri cant
                           -] [- 191,192
                           -( )  191
         1T0001            FBIO  (16)
%M0030   _MAIN             Alarm Em stop
                           -] [- 215
                           -]/[- 23,69,215,355
                           -(S)  213
                           -(R)  214
         PLMS_5            -] [- 45
         1T0001            FBIO  (16)
%M0031   _MAIN             Alarm doors
                           -] [- 218
                           -]/[- 23,218,344
                           -(S)  216
                           -(R)  217
         PLMS_5            -] [- 49
         1T0001            FBIO  (16)
%M0032   _MAIN             Alarm motor prot
                           -] [- 221
                           -]/[- 23,221,344
                           -(S)  219
                           -(R)  220
         PLMS_5            -] [- 51
         1T0001            FBIO  (16)
%M0033   _MAIN             Alarm air press
                           -] [- 38,227
                           -]/[- 81,85,227,344,355
                           -(S)  225
                           -(R)  226
%M0034   _MAIN             Alarm lubri- cation
                           -] [- 230
                           -]/[- 230,340,344
                           -(S)  228
                           -(R)  229
%M0035   _MAIN             Alarm doors In- feeder

Program: D484631                   C:\LM90\TCAP47\D484631                   Global Cross Reference Tables
```

EM1.1TH900627en.fm

```
06-16-03  10:35                          GE FANUC SERIES 90-30/90-20/MICRO (v9.02)                          Page   137
                                              Tetra Cap Applicator 47 -0100
                                         48463-0001 ELD 001 AD 030612 JNT ECM:135545

REF.     BLOCK    NICKNAME   REF. DESCRIPTION / CROSS REFERENCES
-------  -------  -------- -------------------------------------
                           -] [- 310,357
                           -]/[- 155,159,310,359
                           -(S)  308
                           -(R)  309
         PLMS_5            -] [- 59
%M0036   _MAIN             Alarm freque convert
                           -] [- 38,240
                           -]/[- 23,240,344
                           -(SM) 238
                           -(RM) 239
         PLMS_5            -] [- 61
%M0037   _MAIN             Alarm fallen package
                           -] [- 80,173,206,247
                           -]/[- 75,120,122,177,247,344
                           -(S)  245
                           -(R)  246
%M0038   _MAIN             Alarm queue outfeed
                           -] [- 77,252
                           -]/[- 75,252,341,349
                           -(S)  250
                           -(R)  251
%M0039   _MAIN             Alarm low hotmelt temp
                           -] [- 255
                           -]/[- 33,41,177,255,344
                           -(S)  253
                           -(R)  254
         PLMS_5            -] [- 69
%M0040   _MAIN             AlarmNo package to infeed
                           -] [- 173,206,261
                           -]/[- 261,344
                           -(S)  259
                           -(R)  260
%M0041   _MAIN             Alarm clutch main motor
                           -] [- 243
                           -]/[- 45,83,243,347
                           -(SM) 241
                           -(RM) 242
         PLMS_5            -] [- 95
%M0042   _MAIN             Alarm jammed outfeed
                           -] [- 266,269
                           -]/[- 269,344
                           -(S)  267
                           -(R)  268
         PLMS_5            -] [- 71
%M0043   _MAIN             Alarm  cap on carrierBeforeIndex
                           -] [- 319
                           -]/[- 319,345
                           -(S)  317
                           -(R)  318
%M0044   _MAIN             Electrical alarm
                           -] [- 235
                           -]/[- 235,340
                           -(S)  233
                           -(R)  234
%M0045   _MAIN             Alarm index out of pos.
                           -] [- 264
                           -]/[- 264,347
                           -(S)  262
                           -(R)  263
         PLMS_5            -] [- 53
%M0047   _MAIN             Alarm low lev paddle elevat
                           -] [- 276
                           -]/[- 276,340,346
                           -(S)  274
                           -(R)  275
         PLMS_5            -] [- 113
%M0049   _MAIN             Alarm low level In-feed
                           -] [- 281
                           -]/[- 159,281,346
                           -(S)  279
                           -(R)  280
         PLMS_5            -] [- 118
%M0050   _MAIN             Alarm queue cap detect
                           -] [- 295
                           -]/[- 295,346
                           -(S)  293
                           -(R)  294
%M0052   _MAIN             Alarm lead rail
                           -] [- 312,315
                           -]/[- 315,345
                           -(S)  313
                           -(R)  314
         PLMS_5            -] [- 87
%M0054   _MAIN             Alarm cap pusher
                           -] [- 301
                           -]/[- 345
                           -(S)  299
                           -(R)  300
         PLMS_5            -] [- 77
%M0056   _MAIN             Alarm no cap at pusher
                           -] [- 35,291
                           -]/[- 345

Program: D484631                         C:\LM90\TCAP47\D484631                         Global Cross Reference Tables
```

```
06-16-03  10:35                    GE FANUC SERIES 90-30/90-20/MICRO (v9.02)                    Page   138
                                          Tetra Cap Applicator 47 -0100
                                     48463-0001 ELD 001 AD 030612 JNT ECM:135545

REF.     BLOCK    NICKNAME   REF. DESCRIPTION / CROSS REFERENCES
-------  -------  -------- -------------------------------------
                           -(S)  289
                           -(R)  290
         PLMS_5            -] [- 75
%M0057   _MAIN             Alarm no rotate In-feed
                           -] [- 325
                           -]/[- 325,345
                           -(S)  323
                           -(R)  324
%M0058   _MAIN             Alarm no cap queue
                           -] [- 334
                           -]/[- 92,334,346
                           -(S)  332
                           -(R)  333
%M0059   _MAIN             Alarm cap chute open
                           -] [- 337
                           -]/[- 337,348
                           -(S)  335
                           -(R)  336
         PLMS_5            -] [- 103
%M0060   _MAIN             Not ready down stream
                           -] [- 304
                           -]/[- 304,341,349
                           -(S)  302
                           -(R)  303
%M0069   _MAIN             Electrical alarm
                           -] [- 233,235
                           -( )  232
         PLMS_5            -] [- 27
                           -]/[- 28
%M0070   _MAIN             Check air press Step up
                           -] [- 223,238
                           -( )  222
%M0071   _MAIN             Superv air press
                           -] [- 223,225
                           -( )  223
         PLMS_5            -] [- 101
%M0072   _MAIN             Check no air press
                           -] [- 224,225,227,344,350
                           -]/[- 355,356
                           -( )  224
%M0073   _MAIN             Lubric fault
                           -] [- 228,230
                           -]/[- 229
                           -( )  199
         PLMS_5            -] [- 30
                           -]/[- 31
%M0080   _MAIN             Memory flash reset button
                           -] [- 357
                           -( )  358
%M0082   _MAIN             Check K003
                           -] [- 237,238,240
                           -]/[- 24,355,356
                           -( )  237
%M0083   _MAIN             Memory timer doors
                           -] [- 308,310
                           -( )  307
%M0084   _MAIN             Alarm doors In- feeder
                           -]/[- 330
                           -( )  305
         PLMS_5            -] [- 127
%M0087   _MAIN             No yellow alarms on
                           -] [- 32,348
                           -( )  347
%M0088   _MAIN             Check K002
                           -] [- 236,238,240
                           -]/[- 24,355,356
                           -( )  236
%M0089   _MAIN             No yellow leds on
                           -] [- 32,353
                           -( )  352
%M0090   _MAIN             No  blue alarms on
                           -] [- 359
                           -]/[- 357
                           -( )  341
%M0091   _MAIN             No  blue leds on
                           -]/[- 359
                           -( )  343
%M0092   _MAIN             No yellow alarms on
                           -] [- 27,41,349,359
                           -( )  348
%M0093   _MAIN             No yellow leds on
                           -] [- 27,354,359
                           -( )  353
%M0094   _MAIN             No  blue alarms on
                           -] [- 341,359,360,361
                           -]/[- 360,361
                           -( )  340
%M0095   _MAIN             No  blue leds on
                           -] [- 343
                           -]/[- 359
                           -( )  342
%M0096   _MAIN             No yellow alarms on

Program: D484631                   C:\LM90\TCAP47\D484631                   Global Cross Reference Tables
```

EM1.1TH900627en.fm

```
06-16-03  10:35                          GE FANUC SERIES 90-30/90-20/MICRO (v9.02)                          Page   139
                                              Tetra Cap Applicator 47 -0100
                                         48463-0001 ELD 001 AD 030612 JNT ECM:135545

REF.     BLOCK    NICKNAME   REF. DESCRIPTION / CROSS REFERENCES
-------  -------  -------- -------------------------------------
                           -] [- 360,361
                           -]/[- 357,360,361
                           -( )  349
         PLMS_5            -] [- 11
%M0097   _MAIN             No yellow leds on
                           -]/[- 360
                           -( )  354
         PLMS_5            -] [- 11
%M0098   _MAIN             No red alarms on
                           -] [- 27,32,41,359,360,361
                           -]/[- 357,361
                           -( )  355
         PLMS_5            -] [- 11
%M0099   _MAIN             No red leds on
                           -] [- 359,360
                           -]/[- 361
                           -( )  356
         PLMS_5            -] [- 11
%M0100   _MAIN    STEP_0   Step 0
                           -] [- 27,29,43,46,51,53,54,115,215,216,218,221,227,230,235,240,243,245,247,252,255,259,261,264,269,276,
                                 281,291,295,301,304,308,310,315,319,325,334,337,339,357,359,360,361
                           -]/[- 24,44,142
                           -(S)  21
                           -(R)  22
         PLMS_5            -] [- 8
         1T0001            -]/[- 30
%M0101   _MAIN    STEP_1   Step 1
                           -] [- 28,29,30,32,42,43,69,80,85,88,89,94,133,206,244,255,262,312
                           -]/[- 22,43
                           -( )  28
         PLMS_5            -] [- 34,36
                           -]/[- 33,37
         1T0001            -] [- 67,85
%M0102   _MAIN    STEP_2   Step 2
                           -] [- 25,26,28,30,31,33,40,43,48,66,67,69,77,80,81,82,92,97,102,103,113,139,147,148,152,155,159,163,185,
                                 204,253,266,271,278,285,296,297,330
                           -]/[- 20,29,43,51,80,85,100,133,206,350,359
                           -( )  30
         1T0001            -] [- 97
%M0103   _MAIN    STEP_3   Step 3
                           -] [- 25,30,33,39,92,100,122,123,177,183,187,194,290
                           -]/[- 18,26,31,43,66,67,80,81,92,103,118,134,152,173
                           -( )  34
         PLMS_5            -] [- 11,16,37,39,65,81,84,106,113,118
                           -]/[- 36,40,127
%M0107   _MAIN             Been in Step 3 not below 2
                           -] [- 25,78,120,248
                           -]/[- 26
                           -( )  25
         PLMS_5            -] [- 132
         1T0001            -] [- 72,73
%M0109   _MAIN             Inching machine
                           -] [- 45,133
                           -]/[- 41,123
                           -( )  26
%M0111   _MAIN             Ready for Step 1
                           -] [- 28,43
                           -( )  27
%M0112   _MAIN             Ready for Step 2
                           -] [- 30,31,43,359
                           -( )  32
%M0113   _MAIN             Ready for Step 3
                           -] [- 33,39,43
                           -( )  41
%M0115   _MAIN             Go to step 1
                           -]/[- 30,32
                           -( )  38
%M0116   _MAIN             Go to step 1
                           -] [- 32
                           -]/[- 38
                           -( )  37
%M0117   _MAIN             Cap in machine
                           -] [- 41,42
                           -( )  42
%M0120   _MAIN             Cond send synch train
                           -] [- 377,378,379,380
                           -( )  376
%M0121   _MAIN             Synch mplx train
                           -] [- 367,377
                           -]/[- 366
                           -( )  366
                           -(R)  365
%M0122   _MAIN             End of mplx train
                           -] [- 367,368
                           -( )  367
%M0129   _MAIN    H001     Step 1 lamp
                           -( )  29
                           FBIO  369
%M0130   _MAIN    H002     Step 2 lamp
                           -( )  31
                           FBIO  (369)
%M0131   _MAIN    H003     Step 3 lamp

Program: D484631                         C:\LM90\TCAP47\D484631                         Global Cross Reference Tables
```

```
06-16-03  10:35                    GE FANUC SERIES 90-30/90-20/MICRO (v9.02)                    Page   140
                                          Tetra Cap Applicator 47 -0100
                                     48463-0001 ELD 001 AD 030612 JNT ECM:135545

REF.     BLOCK    NICKNAME   REF. DESCRIPTION / CROSS REFERENCES
-------  -------  -------- -------------------------------------
                           -( )  39
                           FBIO  (369)
%M0132   _MAIN    H014     Alarm fallen package LED
                           -]/[- 245,350
                           -( )  247
                           FBIO  (369)
%M0133   _MAIN    H015     Alarm queue outfeed LED
                           -] [- 77
                           -]/[- 75,250,342,354
                           -( )  252
                           FBIO  (369)
%M0134   _MAIN    H016     Alarm hotmelt unit LED
                           -]/[- 40,253,350
                           -( )  255
                           FBIO  (369)
%M0135   _MAIN    H017     Alarm no pack to infeed
                           -]/[- 259,350
                           -( )  261
                           FBIO  (369)
%M0136   _MAIN    H018     Alarm index out of pos.
                           -]/[- 262,352
                           -( )  264
                           FBIO  (369)
%M0137   _MAIN    H021     Cap  LED
                           -( )  53
                           FBIO  (369)
%M0138   _MAIN    H022     No Cap  LED
                           -( )  54
                           FBIO  (369)
%M0139   _MAIN    H023     Alarm jammed outfeed LED
                           -]/[- 267,351
                           -( )  269
                           FBIO  (369)
%M0140   _MAIN    H024     Alarm low lev padElev LED
                           -]/[- 274,342,351
                           -( )  276
                           FBIO  (369)
%M0141   _MAIN    H025     Alarm low lev In-feed LED
                           -]/[- 279
                           -( )  281
                           FBIO  (369)
%M0142   _MAIN    H026     AlarmNo cap at pusher
                           -]/[- 289,351
                           -( )  291
                           FBIO  (369)
%M0143   _MAIN    H027     Alarm CapMiss on pack LED
                           -]/[- 293,351
                           -( )  295
                           FBIO  (369)
%M0144   _MAIN    H028     Alarm pusher cap to index
                           -]/[- 299,351
                           -( )  301
                           FBIO  (369)
%M0145   _MAIN    H01S     Step up LED
                           -] [- 29,31,39
                           -( )  43
                           FBIO  370
%M0146   _MAIN    H02S     Step down LED
                           -( )  44
                           FBIO  (370)
%M0147   _MAIN    H03S     Reset/ Lamp test LED
                           -( )  357
                           FBIO  (370)
%M0148   _MAIN    H04S     Spare
                           FBIO  (370)
%M0149   _MAIN    H05S     Inching LED
                           -( )  45
                           FBIO  (370)
%M0150   _MAIN    H06S     Spare
                           FBIO  (370)
%M0151   _MAIN    H006     Alarm Em stop LED
                           -]/[- 213,356
                           -( )  215
                           FBIO  (370)
%M0152   _MAIN    H007     Alarm doors LED
                           -]/[- 216,350
                           -( )  218
                           FBIO  (370)
%M0153   _MAIN    H008     Alarm motor prot LED
                           -]/[- 219,350
                           -( )  221
                           FBIO  (370)
%M0154   _MAIN    H009     Alarm air press LED
                           -] [- 38
                           -]/[- 225,350,356
                           -( )  227
                           FBIO  (370)
%M0155   _MAIN    H010     Alarm lubri- cation LED
                           -]/[- 228,342,350
                           -( )  230
                           FBIO  (370)
%M0156   _MAIN    H011     Alarm clutch main motor

Program: D484631                    C:\LM90\TCAP47\D484631                    Global Cross Reference Tables
```

EM1.1TH900627en.fm

```
06-16-03  10:35                          GE FANUC SERIES 90-30/90-20/MICRO (v9.02)                          Page   141
                                              Tetra Cap Applicator 47 -0100
                                         48463-0001 ELD 001 AD 030612 JNT ECM:135545

REF.     BLOCK    NICKNAME   REF. DESCRIPTION / CROSS REFERENCES
-------  -------  -------- -------------------------------------
                           -]/[- 241,352
                           -( )  243
                           FBIO  (370)
%M0157   _MAIN    H029     Not ready down stream
                           -]/[- 302,354
                           -( )  304
                           FBIO  (370)
%M0158   _MAIN    H030     Alarm door In- feeder
                           -] [- 311,357,360
                           -]/[- 159,308,351
                           -( )  310
                           FBIO  (370)
%M0159   _MAIN    H031     Alarm lead rail LED
                           -]/[- 313,351
                           -( )  315
                           FBIO  (370)
%M0160   _MAIN    H032     Alarm  cap on carrierBeforeIndex
                           -]/[- 317,352
                           -( )  319
                           FBIO  (370)
%M0161   _MAIN    H033     AlarmNo rotate In-feed Led
                           -]/[- 323,352
                           -( )  325
                           FBIO  (370)
%M0162   _MAIN    H034     Alarm no cap queue LED
                           -]/[- 92,332,352
                           -( )  334
                           FBIO  (370)
%M0163   _MAIN    H035     Alarm cap chute openLED
                           -]/[- 335,353
                           -( )  337
                           FBIO  (370)
%M0164   _MAIN    H036     Alarm pre heater
                           -( )  339
                           FBIO  (370)
%M0165   _MAIN             FBIO  (370)
%M0166   _MAIN             FBIO  (370)
%M0167   _MAIN             FBIO  (370)
%M0168   _MAIN             FBIO  (370)
%M0169   _MAIN    H013     Alarm freque convert
                           -]/[- 350,356
                           -( )  240
                           FBIO  (370),371
%M0170   _MAIN    H012     Alarm electrical cabinet
                           -]/[- 233,342
                           -( )  235
                           FBIO  (370),(371)
%M0171   _MAIN             FBIO  (370),(371)
%M0172   _MAIN             FBIO  (370),(371)
%M0173   _MAIN             FBIO  (370),(371)
%M0174   _MAIN             FBIO  (370),(371)
%M0175   _MAIN             FBIO  (370),(371)
%M0176   _MAIN             FBIO  (370),(371)
%M0177   _MAIN             FBIO  (371)
%M0178   _MAIN             FBIO  (371)
%M0179   _MAIN             FBIO  (371)
%M0180   _MAIN             FBIO  (371)
%M0181   _MAIN             FBIO  (371)
%M0182   _MAIN             FBIO  (371)
%M0183   _MAIN             FBIO  (371)
%M0184   _MAIN             FBIO  (371)
%M0185   _MAIN             FBIO  (371)
%M0186   _MAIN             FBIO  (371)
%M0187   _MAIN             FBIO  (371)
%M0188   _MAIN             FBIO  (371)
%M0189   _MAIN             FBIO  (371)
%M0190   _MAIN             FBIO  (371)
%M0191   _MAIN             FBIO  (371)
%M0192   _MAIN             FBIO  (371)
%M0193   _MAIN             FBIO  (371)
%M0194   _MAIN             FBIO  (371)
%M0195   _MAIN             FBIO  (371)
%M0196   _MAIN             FBIO  (371)
%M0197   _MAIN             FBIO  (371)
%M0198   _MAIN             FBIO  (371)
%M0199   _MAIN             FBIO  (371)
%M0200   _MAIN    AV_1     Synch pos infeed
                           -] [- 117
                           -]/[- 124,134
                           FBIO  (371)
         1T0001            -] [- 78
                           -( )  17
%M0201   _MAIN    AV_2     Carrier chain stop pos
                           -] [- 74
         1T0001            -( )  18
%M0202   _MAIN    AV_3     Carrier chain shift reg
                           -] [- 141
         1T0001            -( )  19
%M0203   1T0001   AV_4     Synch pos hotmelt part 1
                           -] [- 72
                           -( )  20
%M0204   _MAIN    AV_5     Synch pos pusher

Program: D484631                         C:\LM90\TCAP47\D484631                         Global Cross Reference Tables
```

```
06-16-03  10:35                          GE FANUC SERIES 90-30/90-20/MICRO (v9.02)                          Page   142
                                                Tetra Cap Applicator 47 -0100
                                          48463-0001 ELD 001 AD 030612 JNT ECM:135545

REF.     BLOCK    NICKNAME   REF. DESCRIPTION / CROSS REFERENCES
-------  -------  -------- -------------------------------------
                           -] [- 174
         1T0001             -( )  21
%M0205   _MAIN    AV_6     Check cap at index
                           -] [- 136
         1T0001             -( )  22
%M0206   _MAIN    AV_7     Check if cap missed atindex
                           -] [- 286
         1T0001             -( )  23
%M0207   1T0001   AV_8     Check index in pos
                           -( )  24
%M0208   _MAIN    AV_9     Check index move
                           -] [- 175
         1T0001             -( )  25
%M0209   _MAIN             Setting encoder
                           -] [- 357,359,360,361
         1T0001             -] [- 30,31
                            -]/[- 32,34
                            -( )  30
%M0210   _MAIN             With Cap
                           -] [- 26,52,53,66,78,80,92,94,102,109,123,129,134,138,144,159,177,185,253,255,271,272,278,285,292,296,
                                 297,330,338,339,346
                            -]/[- 32,41,52,54,66,67,80,120,125,134,254,346
                            -(M)  52
         PLMS_5             -] [- 19
                            -]/[- 18
         1T0001             -] [- 77,85
%M0211   _MAIN    AV_10    Zero pos angle encoder
                           -] [- 360
         1T0001             -] [- 101
                            -( )  35
%M0212   _MAIN    AV_11    -5 pos angle encoder
                           -] [- 359
         1T0001             -] [- 68
                            -( )  36
%M0213   _MAIN    AV_12    +5 pos angle encoder
                           -] [- 361
         1T0001             -] [- 69
                            -( )  37
%M0214   _MAIN             Reduced speed without cap
                           -] [- 66,134
                            -]/[- 120
                            -( )  66
%M0215   _MAIN             Reduced speed no package
                           -] [- 67
                            -]/[- 66,179
                            -( )  67
%M0216   1T0001   AV_13    Synch pos hotmelt part 2
                           -] [- 72
                            -( )  26
%M0217   _MAIN             Infeed conv aux.mem
                           -] [- 69,71
                            -( )  69
%M0218   1T0001   AV_14    Synch pos hotmelt dot 1
                           -] [- 73
                            -( )  27
%M0219   1T0001   AV_15    Spare
                           -] [- 73
                            -( )  28
%M0220   _MAIN             Low speed right line
                           -] [- 61,62,66,67
                            -]/[- 59,66,67
                            -( )  56
%M0221   _MAIN             Low speed left line
                           -] [- 64,65,66,67
                            -]/[- 59,66,67
                            -( )  57
%M0223   _MAIN             Machine stoped,stop conv
                            -]/[- 71
                            -( )  70
%M0235   _MAIN             No package at infeed
                           -] [- 73,116,131
                            -]/[- 102,109
                            -( )  72
%M0240   _MAIN             No package at infeed
                           -] [- 78
                            -( )  73
%M0242   _MAIN             Stop main motor
                           -] [- 78
                            -( )  77
%M0243   _MAIN             Main motor run cond
                            -]/[- 78
                            -( )  76
%M0245   _MAIN             Main motor stop cond
                           -] [- 80
                            -( )  78
%M0247   _MAIN             Stop M.motor after beltb
                           -] [- 80
                            -( )  79
%M0250   _MAIN             Main motor stop cond
                           -] [- 80
                            -]/[- 81
                            -( )  80

Program: D484631                         C:\LM90\TCAP47\D484631                         Global Cross Reference Tables
```

EM1.1TH900627en.fm

```
06-16-03  10:35                          GE FANUC SERIES 90-30/90-20/MICRO (v9.02)                          Page   143
                                              Tetra Cap Applicator 47 -0100
                                         48463-0001 ELD 001 AD 030612 JNT ECM:135545

REF.     BLOCK    NICKNAME   REF. DESCRIPTION / CROSS REFERENCES
-------  -------  -------- -------------------------------------
%M0260   _MAIN             Delay off inching
                           -] [- 83
                           -( )  84
%M0261   _MAIN             Inching
                           -] [- 83,85
                           -( )  83
%M0265   _MAIN             Cond main motor
                           -] [- 81,86,87,285
                           -]/[- 38
                           -( )  82
%M0266   _MAIN             Inching main motor
                           -] [- 86
                           -( )  85
%M0268   _MAIN             Wrong stopPos main motor
                           -] [- 81,90
                           -( )  90
%M0270   _MAIN             Cap on carrier before index
                           -] [- 316,317,319
                           -]/[- 37,45,75,81,85,177
                           -( )  316
         PLMS_5            -] [- 93
%M0275   _MAIN             Pulsing preheat element on
                           -] [- 99,102
                           -( )  97
%M0276   _MAIN             Pulsing preheat element off
                           -]/[- 97,102
                           -( )  99
%M0277   _MAIN             Aux.mem preheat element nozzle
                           -]/[- 101
                           -( )  100
%M0278   _MAIN             Delay preheat element nozzle
                           -] [- 103
                           -]/[- 102
                           -( )  101
%M0279   _MAIN             Preheat nozzle element aux.mem
                           -] [- 103
                           -]/[- 103
                           -( )  102
%M0280   _MAIN             Fan preheat nozzle aux.mem
                           -] [- 105
                           -( )  102
%M0281   _MAIN             Preheat nozzle element
                           -] [- 104
                           -( )  103
%M0282   _MAIN             Infeed lower off
                           -]/[- 114
                           -( )  113
%M0285   _MAIN             Queue infeed time
                           -] [- 119,173,177
                           -]/[- 173
                           -( )  114
%M0290   _MAIN             Package at lower infeed
                           -] [- 115,116
                           -( )  115
%M0295   _MAIN             Auto empty
                           -] [- 102,109,116,120,122,173,177
                           -( )  116
%M0296   _MAIN             -] [- 180
                           -( )  179
%M0297   _MAIN             Delay belt brake inlet
                           -] [- 180
                           -( )  176
%M0300   _MAIN             Not allowed to run beltbr
                           -] [- 118
                           -]/[- 122
                           -( )  118
%M0301   _MAIN             Queue infeed time
                           -] [- 120,122
                           -( )  119
%M0302   _MAIN             Start belt brake
                           -] [- 122
                           -( )  121
%M0303   _MAIN             Stop belt brake
                           -] [- 134
                           -( )  133
%M0305   _MAIN             No caps before station 5
                           -] [- 127,177
                           -]/[- 118
                           -( )  126
%M0310   _MAIN             No caps before station 9
                           -] [- 78,128
                           -]/[- 26
                           -( )  127
%M0315   _MAIN             No caps or pack in chain
                           -] [- 78,80,129
                           -( )  128
%M0395   _MAIN             Cap pushed by pusher
                           -] [- 136,138,181
                           -( )  136
%M0400   _MAIN             CapFrom index to carrier
                           -( )  137
                           FBIO  142

Program: D484631                         C:\LM90\TCAP47\D484631                         Global Cross Reference Tables
```

```
06-16-03  10:35                    GE FANUC SERIES 90-30/90-20/MICRO (v9.02)                    Page   144
                                          Tetra Cap Applicator 47 -0100
                                     48463-0001 ELD 001 AD 030612 JNT ECM:135545

REF.     BLOCK    NICKNAME   REF. DESCRIPTION / CROSS REFERENCES
-------  -------  -------- -------------------------------------
%M0401   _MAIN    CAP_1    Cap in index wheel pos 1
                           -]/[- 126,178
                           -(S)  139
                           FBIO  142
%M0402   _MAIN    CAP_2    Cap in index wheel pos 2
                           -]/[- 126
                           FBIO  (142)
         1T0001            -] [- 72
%M0403   _MAIN    CAP_3    Cap in carrier chain pos 3
                           -]/[- 126
                           FBIO  (142)
         1T0001            -] [- 73
%M0404   _MAIN    CAP_4    Cap in carrier chain pos 4
                           -]/[- 126
                           FBIO  (142)
%M0405   _MAIN    CAP_5    Cap in carrier chain pos 5
                           -] [- 122
                           -]/[- 126,134
                           -(S)  125
                           FBIO  (142)
%M0406   _MAIN    CAP_6    Cap in carrier chain pos 6
                           -]/[- 127
                           FBIO  (142)
%M0407   _MAIN    CAP_7    Cap in carrier chain pos 7
                           -]/[- 127
                           FBIO  (142)
         1T0001            -] [- 75
%M0408   _MAIN    CAP_8    Cap in carrier chain pos 8
                           -]/[- 127
                           FBIO  (142)
         1T0001            -] [- 75
%M0409   _MAIN    CAP_9    Cap in carrier chain pos 9
                           -]/[- 127
                           FBIO  (142)
         1T0001            -] [- 75
%M0410   _MAIN    CAP_10   Cap in carrier chain pos 10
                           -]/[- 128
                           FBIO  (142)
         1T0001            -] [- 75
%M0411   _MAIN    CAP_11   Cap in carrier chain pos 11
                           -]/[- 128
                           FBIO  (142)
%M0412   _MAIN    CAP_12   Cap in carrier chain pos 12
                           -]/[- 128
                           FBIO  (142)
%M0413   _MAIN    CAP_13   Cap in carrier chain pos 13
                           -]/[- 128
                           FBIO  (142)
%M0414   _MAIN    CAP_14   Cap in carrier chain pos 14
                           -]/[- 128
                           FBIO  (142)
%M0415   _MAIN    CAP_15   Spare
                           FBIO  (142)
%M0416   _MAIN    CAP_16   Spare
                           FBIO  (142)
%M0417   _MAIN    CAP_END  FBIO  142
%M0500   _MAIN             Run enable
                           -] [- 121,179,303,343
                           -]/[- 77,134,302,304
                           -( )  189
         PLMS_5            -]/[- 105
%M0510   _MAIN             Infeed brake full
                           -] [- 177
                           -( )  173
%M0525   _MAIN             Cap conv max queue
                           -]/[- 92,159
                           -(S)  146
                           -(R)  147
%M0530   _MAIN             Low level In- feeder
                           -] [- 155
                           -(S)  148
                           -(R)  149
%M0540   _MAIN             Empty- ing  In- feeder
                           -] [- 152,153,159,160
                           -]/[- 92,285,331
                           -( )  152
%M0547   _MAIN             Not allowed to run elevat
                           -] [- 154
                           -]/[- 155
                           -( )  154
%M0550   _MAIN             Start In- feeder
                           -] [- 161,166,321
                           -( )  160
%M0552   _MAIN             No rotate In- feeder
                           -] [- 163
                           -]/[- 160
                           -(SM) 157
                           -(RM) 158
%M0553   _MAIN             In- feeder reverse
                           -] [- 163,164,165
                           -( )  163
%M0554   _MAIN             In- feeder reverse

Program: D484631                   C:\LM90\TCAP47\D484631                   Global Cross Reference Tables
```

```
06-16-03  10:35                    GE FANUC SERIES 90-30/90-20/MICRO (v9.02)                    Page   145
                                        Tetra Cap Applicator 47 -0100
                                   48463-0001 ELD 001 AD 030612 JNT ECM:135545

REF.     BLOCK    NICKNAME   REF. DESCRIPTION / CROSS REFERENCES
-------  -------  --------  ------------------------------------
                            -]/[- 163,165
                            -( )  164
%M0555   _MAIN              In- feeder reverse delay
                            -] [- 163
                            -( )  162
%M0556   _MAIN              Cap blow In- feeder
                            -] [- 167
                            -( )  166
%M0557   _MAIN              Delay alarm start In-feed
                            -] [- 322
                            -( )  321
%M0600   _MAIN              Cap at index
                            -] [- 136
                            -( )  169
%M0610   _MAIN              Cap conv no queue
                            -] [- 78
                            -]/[- 178
                            -(S)  170
                            -(R)  171
%M0615   _MAIN              Index out of pos.
                            -] [- 175,262,264
                            -]/[- 37,81,138,184
                            -( )  175
         1T0001             -]/[- 72,73
%M0620   _MAIN              Start pusher to index
                            -] [- 184
                            -( )  180
%M0621   _MAIN              Alarm no pack from infeed
                            -] [- 256
                            -]/[- 179
                            -( )  182
%M0622   _MAIN              Reset no pack from infeed
                            -] [- 183
                            -]/[- 182
                            -( )  183
%M0701   1T0001   ENC_OK    Angle encoder OK
                            -]/[- 63,67
                            -(S)  49,63
                            -(R)  56,59
%M0702   1T0001             Delayed signal main motor
                            -] [- 56,58
                            -(S)  51
                            -(R)  52
%M0705   1T0001             New position
                            -] [- 56
                            -( )  54
%M0706   1T0001             Reset angle encoder OK
                            -] [- 59
                            -( )  58
%M0710   _MAIN              Alarm angle encoder
                            -] [- 38,45,90,241,243
                            -]/[- 23
         1T0001             -] [- 67,68,69
                            -( )  67
%M0712   1T0001             -5 pos angle encoder
                            -] [- 68,70
                            -( )  68
%M0713   1T0001             +5 pos angle encoder
                            -] [- 69,70
                            -( )  69
%M0781   _MAIN              Preheat pulse
                            -] [- 107
                            -]/[- 95
                            FBIO  10
%M0782   _MAIN              Contin low speed
                            -] [- 59,61,64,66,67
                            -]/[- 62,65,66,67
                            FBIO  10
%M0783   _MAIN              Spare
                            FBIO  10
%M0784   _MAIN              B917 connect
                            -]/[- 188,248
                            FBIO  11
         PLMS_5             -]/[- 105
%M0785   _MAIN              Spare
                            FBIO  11
%M0786   _MAIN              Current relay connect
                            -] [- 338
                            -]/[- 339
                            FBIO  11
%M0787   _MAIN              Alarm queue cap detect
                            -] [- 293
                            -]/[- 33,346
                            FBIO  12
         PLMS_5             -] [- 89
%M0799   1T0001             Missing Cap on package
                            -] [- 86
                            -]/[- 87
                            -( )  85
%M0800   1T0001             Missing Cap on package
                            -] [- 85,88,97
                            -]/[- 95

Program: D484631                   C:\LM90\TCAP47\D484631                   Global Cross Reference Tables
```

```
06-16-03  10:35                    GE FANUC SERIES 90-30/90-20/MICRO (v9.02)                    Page   146
                                          Tetra Cap Applicator 47 -0100
                                     48463-0001 ELD 001 AD 030612 JNT ECM:135545

REF.     BLOCK    NICKNAME   REF. DESCRIPTION / CROSS REFERENCES
-------  -------  -------- -------------------------------------
                           -(SM) 86
                           -(RM) 87
%M0805   1T0001            Start package ejector
                           -] [- 88,89,91
                           -]/[- 90,93
                           -( )  88
%M0810   1T0001            Package ejector ready
                           -] [- 93
                           -]/[- 88,91
                           -(SM) 89
                           -(RM) 90
%M0811   1T0001            Extern package ejector
                           -] [- 92
                           -( )  91
%M0815   1T0001            Check missing Cap on package
                           -] [- 96,99
                           -]/[- 97
                           -( )  95
%M0816   _MAIN             Alarm missing Cap on package
                           -] [- 295
                           -]/[- 33,75,178,345
         PLMS_5            -] [- 79
         1T0001            -]/[- 99
                           -(SM) 98
                           -(RM) 99
%M0820   _MAIN             Alarm fallen package
                           -] [- 72,244,245,247
                           -]/[- 120,122,178,187
                           -( )  244
         PLMS_5            -] [- 65,127
%M0821   _MAIN             AlarmNo package to infeed
                           -] [- 72,77,133,259,261
                           -]/[- 33,40,76,179
                           -( )  258
         PLMS_5            -] [- 67
%M0822   _MAIN             AlarmNo package to infeed
                           -] [- 257,258
                           -( )  257
%M0824   _MAIN             Alarm queue cap detect
                           -] [- 293,295
                           -]/[- 33,40,45,120
                           -( )  292
         PLMS_5            -] [- 89
         1T0001            -]/[- 85
%M0825   _MAIN             Alarm queue outfeed
                           -] [- 250,252
                           -]/[- 45,120,178,187,251,342,343
                           -( )  249
         PLMS_5            -] [- 105
%M0826   _MAIN             AlarmNo package to infeed
                           -] [- 256,258
                           -( )  256
%M0835   _MAIN             Stop main motor
                           -] [- 36
                           -( )  35
%M0837   _MAIN             Delay stop main motor
                           -]/[- 33,37,76,81
                           -( )  36
         PLMS_5            -] [- 75
%M0870   _MAIN             Jammed outfeed
                           -] [- 265,266,267,269
                           -]/[- 37,45
                           -( )  265
%M0875   _MAIN             Alarm jammed outfeed
                           -]/[- 81,85,178
                           -( )  266
%M0880   _MAIN             No alarm empty PadElev
                           -] [- 278
                           -( )  277
%M0885   _MAIN             Low level paddle elevat
                           -] [- 272,274,276,277
                           -]/[- 275,278
                           -( )  271
%M0886   _MAIN             Low level paddle elevat
                           -]/[- 271
                           -( )  270
%M0887   _MAIN             Low level paddle elevat
                           -] [- 273,340,342
                           -]/[- 92,155,160,327,329,330,346,351
                           -( )  272
%M0890   _MAIN             Alarm low lev In- feeder
                           -] [- 278,279,281
                           -]/[- 285,330
                           -( )  278
%M0891   _MAIN             No caps in machine
                           -]/[- 283,284
                           -( )  282
%M0901   _MAIN             Cap at max queue
                           -] [- 283,284,330
                           -( )  283
%M0902   _MAIN             Cap at min queue
                           -] [- 284

Program: D484631                   C:\LM90\TCAP47\D484631                   Global Cross Reference Tables
```

EM1.1TH900627en.fm

```
06-16-03  10:35                          GE FANUC SERIES 90-30/90-20/MICRO (v9.02)                          Page   147
                                              Tetra Cap Applicator 47 -0100
                                         48463-0001 ELD 001 AD 030612 JNT ECM:135545

REF.     BLOCK    NICKNAME   REF. DESCRIPTION / CROSS REFERENCES
-------  -------  -------- -------------------------------------
                           -( )  284
%M0909   _MAIN             No cap at pusher
                           -] [- 286
                           -( )  285
%M0910   _MAIN             Alarm no cap at pusher
                           -] [- 289
                           -]/[- 179,288,290
                           -( )  288
%M0911   _MAIN             Check no cap at pusher
                           -] [- 288
                           -]/[- 287
                           -( )  286
%M0912   _MAIN             Check no cap at pusher
                           -] [- 288
                           -]/[- 287,288
                           -( )  287
%M0913   _MAIN             Alarm cap pusher return
                           -] [- 296,298
                           -( )  296
%M0914   _MAIN             Alarm cap pusher forward
                           -] [- 297,298
                           -( )  297
%M0915   _MAIN             Alarm cap pusher
                           -] [- 299
                           -]/[- 37,81,85,184
                           -( )  298
%M0920   _MAIN             Alarm lead rail
                           -] [- 313,315
                           -]/[- 37,45,81,85,178
                           -( )  312
%M0921   _MAIN             Alarm pre heater
                           -] [- 35,338,339
                           -]/[- 76,179,346
                           -( )  338
         PLMS_5            -] [- 91
%M0925   _MAIN             Alarm no rotate In-feed
                           -] [- 154,156,322,323,325
                           -]/[- 161,167
                           -( )  322
         PLMS_5            -] [- 81
%M0929   _MAIN             Alarm no cap queue
                           -] [- 331
                           -( )  330
         PLMS_5            -] [- 84
%M0930   _MAIN             Alarm no cap queue
                           -] [- 332,334
                           -]/[- 333
                           -( )  331
         PLMS_5            -] [- 85
%M0931   _MAIN             Cap to max queue
                           -] [- 329,330
                           -( )  329
%M0932   _MAIN             Cap in In- feeder
                           -] [- 327,328
                           -( )  327
%M0959   1T0001            Cap in carrier chain
                           -] [- 75,76
                           -( )  75
%M0960   _MAIN             Cap in carrier chain
                           -]/[- 120
         1T0001            -] [- 77,78
                           -]/[- 75,76
                           -( )  77
%M0961   1T0001            Reset packIn carrier chain
                           -] [- 79
                           -]/[- 77
                           -(SM) 83
                           -(RM) 84
%M0962   1T0001            Start eject package
                           -] [- 83,85,92
                           -]/[- 84
                           -(SM) 81
                           -(RM) 82
%M0963   1T0001            No pack in carrier chain
                           -] [- 81
                           -]/[- 82
                           -( )  79

==============================================================================
==========  TEMPORARY  (%T)  GLOBAL CROSS REFERENCES
==============================================================================
REF.     BLOCK    NICKNAME   REF. DESCRIPTION / CROSS REFERENCES
-------  -------  -------- -------------------------------------
%T0001   _MAIN             Pulse Step up
                           -] [- 21,28,30,33
                           -(^)  18
%T0002   _MAIN    S02H_    Pulse Step down
                           -] [- 22
                           -]/[- 30,33
                           -(^)  19
         PLMS_5            -] [- 110
%T0003   _MAIN    S01H_    Pulse Step up

Program: D484631                         C:\LM90\TCAP47\D484631                                  Global Cross Reference Tables
```

```
06-16-03  10:35                          GE FANUC SERIES 90-30/90-20/MICRO (v9.02)                          Page   148
                                                Tetra Cap Applicator 47 -0100
                                          48463-0001 ELD 001 AD 030612 JNT ECM:135545

REF.     BLOCK    NICKNAME   REF. DESCRIPTION / CROSS REFERENCES
-------  -------  -------- -------------------------------------
                           -] [- 18,69,98,122
                           -]/[- 70,72,271
                           -(^)  17
         PLMS_5            -] [- 109
%T0004   _MAIN    S03H_    Pulse Alarm Reset
                           -] [- 182,193,214,217,220,226,229,234,239,242,246,251,254,260,263,268,275,280,288,290,294,300,303,309,
                                 314,318,324,333,336
                           -]/[- 175,197,198,223,224,236,237,244,256,257,265,278,296,297,338
                           -(^)  363
         1T0001            -] [- 49,99
%T0005   _MAIN             Pulse fast flash
                           -] [- 16
                           -]/[- 16
                           -(^)  15
%T0006   _MAIN             Pulse End mplx train
                           -] [- 14,369,370,371,373,374,375
                           -]/[- 14
                           -(^)  368
%T0010   _MAIN             Choice Cap   no Cap
                           -] [- 52
                           -]/[- 52
                           -(^)  51
%T0017   _MAIN             Carrier chain synch stop
                           -]/[- 81,90
                           -(^)  74
%T0030   _MAIN             Infeed synch signal
                           -] [- 122
                           -(^)  117
%T0035   _MAIN             End of synch signal
                           -] [- 125
                           -(^)  124
%T0040   _MAIN             Last pack left machine
                           -] [- 133
                           -]/[- 116
                           -(^)  129
%T0045   _MAIN    B_104_   Package at belt brake disch
                           -] [- 134,182
                           -(^)  130
%T0046   _MAIN             Cap to index
                           -] [- 182
                           -(^)  181
%T0050   _MAIN             No pack stop belt brake
                           -] [- 134
                           -]/[- 115,116
                           -(^)  131
%T0052   _MAIN             Carrier chain shift reg
                           -] [- 142
                           -]/[- 136
                           -(^)  141
%T0055   _MAIN             Cap to index wheel
                           -] [- 139
                           -(^)  138
%T0058   _MAIN    AV_5_    Start pusher
                           -] [- 66,67,179
                           -(^)  174
%T0060   _MAIN    B104__   Package at belt brake disch
                           -] [- 66,67,173
                           -(v)  172
%T0070   _MAIN    B196_    Pulse max queue
                           -] [- 329
                           -]/[- 330
                           -(^)  328
%T0071   _MAIN    B199_    Pulse cap in In- feeder
                           -] [- 327
                           -(v)  326
%T0090   _MAIN    S115_    In- feeder restart
                           -] [- 309,336
                           -(^)  306
%T0095   _MAIN             Rotate guard In-feed
                           -]/[- 154,322
                           -(^)  320
%T0100   _MAIN             Pulse empty- ing   on
                           -] [- 152
                           -]/[- 271
                           -(^)  150
%T0101   _MAIN             Pulse empty- ing  off
                           -]/[- 152
                           -(^)  151
%T0123   1T0001            Pulse cap in carrier chain
                           -] [- 77
                           -(^)  76
%T0130   _MAIN             Pulse no rotate In-feed
                           -] [- 157
                           -(^)  156
%T0140   1T0001            Pulse scan counter
                           -] [- 43,45,54,63,65
                           -(^)  41
%T0141   1T0001            Pulse reset encoder check
                           -] [- 61
                           -(^)  60
%T0142   1T0001            Pulse zero angle encoder
                           -] [- 103,105,106,107

Program: D484631                         C:\LM90\TCAP47\D484631                          Global Cross Reference Tables
```

```
06-16-03  10:35                          GE FANUC SERIES 90-30/90-20/MICRO (v9.02)                          Page   149
                                              Tetra Cap Applicator 47 -0100
                                         48463-0001 ELD 001 AD 030612 JNT ECM:135545

REF.     BLOCK    NICKNAME   REF. DESCRIPTION / CROSS REFERENCES
-------  -------  -------- -------------------------------------
                           -]/[- 104
                           -(^)  101
%T0143   1T0001            Pulse 10 machine cycles
                           -] [- 106,109,110
                           -(^)  106
%T0170   _MAIN             Pulse low lev elevat
                           -] [- 274
                           -(^)  273
%T0200   1T0001            Pulse noPack in chain
                           -] [- 79
                           -(^)  78
%T0201   1T0001            Pulse  1 sec
                           -] [- 95
                           -(^)  94
%T0202   1T0001            Count missing Cap on package
                           -] [- 98
                           -(^)  97
%T0203   1T0001            Pulse  1 sec
                           -] [- 32,33
                           -(^)  31
%T0204   1T0001            Reset setting encoder
                           -] [- 34
                           -]/[- 30
                           -(^)  33
%T0205   1T0001            Reset alarm angle encoder
                           -]/[- 67
                           -(^)  70

==============================================================================
==========  REGISTER  (%R)  GLOBAL CROSS REFERENCES
==============================================================================
REF.     BLOCK    NICKNAME   REF. DESCRIPTION / CROSS REFERENCES
-------  -------  -------- -------------------------------------
%R0007   _MAIN             Lamp test
                           FBIO  362
%R0008   _MAIN             FBIO  (362)
%R0009   _MAIN             FBIO  (362)
%R0010   _MAIN             Extern brake queue length
                           FBIO  204
%R0011   _MAIN             FBIO  (204)
%R0012   _MAIN             FBIO  (204)
%R0013   _MAIN             Extern brake space betw q
                           FBIO  205
%R0014   _MAIN             FBIO  (205)
%R0015   _MAIN             FBIO  (205)
%R0016   _MAIN             Extern brake queue to DE
                           FBIO  203
%R0017   _MAIN             FBIO  (203)
%R0018   _MAIN             FBIO  (203)
%R0019   _MAIN    LUB_INT  Lubric inter vall
                           FBIO  193,194,201
%R0020   _MAIN             FBIO  (194)
%R0021   _MAIN             FBIO  (194)
%R0022   _MAIN    LUB_TME  Lubric time
                           FBIO  195
%R0023   _MAIN             FBIO  (195)
%R0024   _MAIN             FBIO  (195)
%R0025   _MAIN             Fault no high lubric press
                           FBIO  197
%R0026   _MAIN             FBIO  (197)
%R0027   _MAIN             FBIO  (197)
%R0028   _MAIN             Delay Step down
                           FBIO  20
%R0029   _MAIN             FBIO  (20)
%R0030   _MAIN             FBIO  (20)
%R0031   _MAIN             Check air press Step up
                           FBIO  222
%R0032   _MAIN             FBIO  (222)
%R0033   _MAIN             FBIO  (222)
%R0034   _MAIN             Superv air press
                           FBIO  223
%R0035   _MAIN             FBIO  (223)
%R0036   _MAIN             FBIO  (223)
%R0037   _MAIN             Check no air press
                           FBIO  224
%R0038   _MAIN             FBIO  (224)
%R0039   _MAIN             FBIO  (224)
%R0040   _MAIN             Fault no low lubric press
                           FBIO  198
%R0041   _MAIN             FBIO  (198)
%R0042   _MAIN             FBIO  (198)
%R0043   _MAIN             Nmbr of lubric at low level
                           FBIO  196
%R0044   _MAIN             FBIO  (196)
%R0045   _MAIN             FBIO  (196)
%R0052   _MAIN             Timer alarm doors infeed
                           FBIO  307
%R0053   _MAIN             FBIO  (307)
%R0054   _MAIN             FBIO  (307)
%R0055   _MAIN             Timer frq alarm
                           FBIO  238
%R0056   _MAIN             FBIO  (238)

Program: D484631                         C:\LM90\TCAP47\D484631                         Global Cross Reference Tables
```

```
06-16-03  10:35                    GE FANUC SERIES 90-30/90-20/MICRO (v9.02)                    Page   150
                                          Tetra Cap Applicator 47 -0100
                                     48463-0001 ELD 001 AD 030612 JNT ECM:135545

REF.     BLOCK    NICKNAME   REF. DESCRIPTION / CROSS REFERENCES
-------  -------  -------- ------------------------------------
%R0057   _MAIN             FBIO  (238)
%R0073   _MAIN             Alarm fallen package
                           FBIO  244
%R0074   _MAIN             FBIO  (244)
%R0075   _MAIN             FBIO  (244)
%R0082   _MAIN             Alarm queue outfeed
                           FBIO  248
%R0083   _MAIN             FBIO  (248)
%R0084   _MAIN             FBIO  (248)
%R0085   _MAIN             Alarm cap detect
                           FBIO  292
%R0086   _MAIN             FBIO  (292)
%R0087   _MAIN             FBIO  (292)
%R0088   _MAIN             Alarm queue outfeed
                           FBIO  248
%R0089   _MAIN             FBIO  (248)
%R0090   _MAIN             FBIO  (248)
%R0091   _MAIN             No package to infeed
                           FBIO  256
%R0092   _MAIN             FBIO  (256)
%R0093   _MAIN             FBIO  (256)
%R0097   _MAIN             Alarm doors In- feeder
                           FBIO  305
%R0098   _MAIN             FBIO  (305)
%R0099   _MAIN             FBIO  (305)
%R0100   _MAIN             Alarm no cap at pusher
                           FBIO  288
%R0101   _MAIN             FBIO  (288)
%R0102   _MAIN             FBIO  (288)
%R0103   _MAIN             Alarm no cap queue
                           FBIO  331
%R0104   _MAIN             FBIO  (331)
%R0105   _MAIN             FBIO  (331)
%R0109   _MAIN             Cap blow In- feeder
                           FBIO  166
%R0110   _MAIN             FBIO  (166)
%R0111   _MAIN             FBIO  (166)
%R0112   _MAIN             Alarm no rotate In-feed
                           FBIO  322
%R0113   _MAIN             FBIO  (322)
%R0114   _MAIN             FBIO  (322)
%R0115   _MAIN             In- feeder forward
                           FBIO  161
%R0116   _MAIN             FBIO  (161)
%R0117   _MAIN             FBIO  (161)
%R0118   _MAIN             In- feeder reverse
                           FBIO  164
%R0119   _MAIN             FBIO  (164)
%R0120   _MAIN             FBIO  (164)
%R0121   _MAIN             AlarmNo package to infeed
                           FBIO  257
%R0122   _MAIN             FBIO  (257)
%R0123   _MAIN             FBIO  (257)
%R0124   _MAIN             In- feeder reverse delay
                           FBIO  162
%R0125   _MAIN             FBIO  (162)
%R0126   _MAIN             FBIO  (162)
%R0127   _MAIN             Infeed lower off
                           FBIO  113
%R0128   _MAIN             FBIO  (113)
%R0129   _MAIN             FBIO  (113)
%R0130   _MAIN             Package coming
                           FBIO  188
%R0131   _MAIN             FBIO  (188)
%R0132   _MAIN             FBIO  (188)
%R0133   _MAIN             Delay alarm start In-feed
                           FBIO  321
%R0134   _MAIN             FBIO  (321)
%R0135   _MAIN             FBIO  (321)
%R0146   _MAIN             Alarm queue outfeed
                           FBIO  249
%R0147   _MAIN             FBIO  (249)
%R0148   _MAIN             FBIO  (249)
%R0200   _MAIN             Low level paddle elevat
                           FBIO  272
%R0201   _MAIN             FBIO  (272)
%R0202   _MAIN             FBIO  (272)
%R0203   _MAIN             No package at infeed
                           FBIO  72
%R0204   _MAIN             FBIO  (72)
%R0205   _MAIN             FBIO  (72)
%R0206   _MAIN             Alarm jammed outfeed
                           FBIO  265
%R0207   _MAIN             FBIO  (265)
%R0208   _MAIN             FBIO  (265)
%R0209   _MAIN             Queue infeed time
                           FBIO  114
%R0210   _MAIN             FBIO  (114)
%R0211   _MAIN             FBIO  (114)
%R0218   _MAIN             Machine stoped, stop conv
                           FBIO  70
%R0219   _MAIN             FBIO  (70)

Program: D484631                   C:\LM90\TCAP47\D484631                   Global Cross Reference Tables
```

```
06-16-03  10:35                    GE FANUC SERIES 90-30/90-20/MICRO (v9.02)                    Page   151
                                        Tetra Cap Applicator 47 -0100
                                   48463-0001 ELD 001 AD 030612 JNT ECM:135545

REF.     BLOCK    NICKNAME   REF. DESCRIPTION / CROSS REFERENCES
-------  -------  -------- -------------------------------------
%R0220   _MAIN             FBIO  (70)
%R0221   _MAIN             No pack stop belt brake
                           FBIO  131
%R0222   _MAIN             FBIO  (131)
%R0223   _MAIN             FBIO  (131)
%R0230   _MAIN             Stop M.motor after beltb
                           FBIO  79
%R0231   _MAIN             FBIO  (79)
%R0232   _MAIN             FBIO  (79)
%R0233   _MAIN             Choice Cap   no Cap
                           FBIO  51
%R0234   _MAIN             FBIO  (51)
%R0235   _MAIN             FBIO  (51)
%R0259   _MAIN             Delay preheat element nozzle
                           FBIO  101
%R0260   _MAIN             FBIO  (101)
%R0261   _MAIN             FBIO  (101)
%R0265   _MAIN             Delay check pre heater
                           FBIO  338
%R0266   _MAIN             FBIO  (338)
%R0267   _MAIN             FBIO  (338)
%R0268   1T0001            No pack in carrier chain
                           FBIO  79
%R0269   1T0001            FBIO  (79)
%R0270   1T0001            FBIO  (79)
%R0271   _MAIN             Check no cap at pusher
                           FBIO  287
%R0272   _MAIN             FBIO  (287)
%R0273   _MAIN             FBIO  (287)
%R0357   _MAIN             Delay off  cap conv
                           FBIO  92
%R0358   _MAIN             FBIO  (92)
%R0359   _MAIN             FBIO  (92)
%R0360   _MAIN             Delay off inching
                           FBIO  84
%R0361   _MAIN             FBIO  (84)
%R0362   _MAIN             FBIO  (84)
%R0363   _MAIN             Stop main motor
                           FBIO  77
%R0364   _MAIN             FBIO  (77)
%R0365   _MAIN             FBIO  (77)
%R0366   _MAIN             No package at infeed
                           FBIO  73
%R0367   _MAIN             FBIO  (73)
%R0368   _MAIN             FBIO  (73)
%R0369   1T0001            Angle encoder
                           FBIO  16,17,18,19,20,21,22,23,24,25,26,27,28,35,36,37,45,60
%R0372   _MAIN             Delay powerOn preheat element
                           FBIO  103
%R0373   _MAIN             FBIO  (103)
%R0374   _MAIN             FBIO  (103)
%R0386   _MAIN             Plusing preheat on timer
                           FBIO  97,98
%R0387   _MAIN             FBIO  (97)
%R0388   _MAIN             FBIO  (97)
%R0389   _MAIN             Pulsing preheat off timer
                           FBIO  99
%R0390   _MAIN             FBIO  (99)
%R0391   _MAIN             FBIO  (99)
%R0392   _MAIN             Delay stop main motor
                           FBIO  36
%R0393   _MAIN             FBIO  (36)
%R0394   _MAIN             FBIO  (36)
%R0395   _MAIN             Delay power off pre heatFan
                           FBIO  110
%R0396   _MAIN             FBIO  (110)
%R0397   _MAIN             FBIO  (110)
%R0401   _MAIN             Cap at index
                           FBIO  169
%R0402   _MAIN             FBIO  (169)
%R0403   _MAIN             FBIO  (169)
%R0404   _MAIN             Cap conv no queue
                           FBIO  170
%R0405   _MAIN             FBIO  (170)
%R0406   _MAIN             FBIO  (170)
%R0407   _MAIN             Cap conv min queue
                           FBIO  171
%R0408   _MAIN             FBIO  (171)
%R0409   _MAIN             FBIO  (171)
%R0410   _MAIN             Alarm cap pusher return
                           FBIO  296
%R0411   _MAIN             FBIO  (296)
%R0412   _MAIN             FBIO  (296)
%R0413   _MAIN             Cap conv  no max queue
                           FBIO  147
%R0414   _MAIN             FBIO  (147)
%R0415   _MAIN             FBIO  (147)
%R0416   _MAIN             Cap conv max queue
                           FBIO  146
%R0417   _MAIN             FBIO  (146)
%R0418   _MAIN             FBIO  (146)
%R0419   _MAIN             Low level In- feeder

Program: D484631                   C:\LM90\TCAP47\D484631                   Global Cross Reference Tables
```

```
06-16-03  10:35                    GE FANUC SERIES 90-30/90-20/MICRO (v9.02)                    Page   152
                                          Tetra Cap Applicator 47 -0100
                                     48463-0001 ELD 001 AD 030612 JNT ECM:135545

REF.     BLOCK    NICKNAME   REF. DESCRIPTION / CROSS REFERENCES
-------  -------  -------- -------------------------------------
                           FBIO  148
%R0420   _MAIN              FBIO  (148)
%R0421   _MAIN              FBIO  (148)
%R0422   _MAIN              No low level In- feeder
                           FBIO  149
%R0423   _MAIN              FBIO  (149)
%R0424   _MAIN              FBIO  (149)
%R0425   _MAIN              Queue infeed time
                           FBIO  119
%R0426   _MAIN              FBIO  (119)
%R0427   _MAIN              FBIO  (119)
%R0428   _MAIN              Alarm cap pusher forward
                           FBIO  297
%R0429   _MAIN              FBIO  (297)
%R0430   _MAIN              FBIO  (297)
%R0431   _MAIN              No low level infeed 2
                           FBIO  149
%R0432   _MAIN              FBIO  (149)
%R0433   _MAIN              FBIO  (149)
%R0434   _MAIN              Delay  power  off preheatFan
                           FBIO  105
%R0435   _MAIN              FBIO  (105)
%R0436   _MAIN              FBIO  (105)
%R0437   1T0001             Pulse  1 sec
                           FBIO  31,32
%R0438   1T0001             Reset setting encoder
                           FBIO  33,34
%R0439   _MAIN              Check K002
                           FBIO  236
%R0440   _MAIN              Check K003
                           FBIO  (236),237
%R0441   _MAIN              FBIO  (236),(237)
%R0442   _MAIN              FBIO  (237)
%R0445   _MAIN              FBIO  176
%R0446   _MAIN              FBIO  (176)
%R0447   _MAIN              FBIO  (176)
%R0469   _MAIN              No alarm empty PadElev
                           FBIO  277
%R0470   _MAIN              FBIO  (277)
%R0471   _MAIN              FBIO  (277)
%R0472   _MAIN              Low level paddle elevat
                           FBIO  271
%R0473   _MAIN              FBIO  (271)
%R0474   _MAIN              FBIO  (271)
%R0475   _MAIN              Low level paddle elevat
                           FBIO  270
%R0476   _MAIN              FBIO  (270)
%R0477   _MAIN              FBIO  (270)
%R0478   _MAIN              Alarm low level In-feed
                           FBIO  278
%R0479   _MAIN              FBIO  (278)
%R0480   _MAIN              FBIO  (278)
%R0501   _MAIN              Length synch pulse train
                           FBIO  365,367,376
%R0502   _MAIN              FBIO  (367)
%R0503   _MAIN              FBIO  (367)
%R0507   _MAIN              Reduced speed no package
                           FBIO  67
%R0508   _MAIN              FBIO  (67)
%R0509   _MAIN              FBIO  (67)
%R0510   _MAIN              Infeed brake full
                           FBIO  173
%R0511   _MAIN              FBIO  (173)
%R0512   _MAIN              FBIO  (173)
%R0513   _MAIN              Alarm no pack from infeed
                           FBIO  182
%R0514   _MAIN              FBIO  (182)
%R0515   _MAIN              FBIO  (182)
%R0524   _MAIN              Reduced speed without cap
                           FBIO  66
%R0525   _MAIN              FBIO  (66)
%R0526   _MAIN              FBIO  (66)
%R0530   _MAIN              Low speed left line
                           FBIO  57
%R0531   _MAIN              FBIO  (57)
%R0532   _MAIN              FBIO  (57)
%R0533   _MAIN              Low speed left line
                           FBIO  57
%R0534   _MAIN              FBIO  (57)
%R0535   _MAIN              FBIO  (57)
%R0536   _MAIN              Low speed right line
                           FBIO  56
%R0537   _MAIN              FBIO  (56)
%R0538   _MAIN              FBIO  (56)
%R0539   _MAIN              Low speed right line
                           FBIO  56
%R0540   _MAIN              FBIO  (56)
%R0541   _MAIN              FBIO  (56)
%R0701   _MAIN              Copy of data word 1
                           FBIO  369,372,373,378
%R0702   _MAIN              FBIO  (372),(373),(378)
%R0703   _MAIN              Copy of data word 2

Program: D484631                   C:\LM90\TCAP47\D484631                   Global Cross Reference Tables
```

```
06-16-03  10:35                          GE FANUC SERIES 90-30/90-20/MICRO (v9.02)                          Page   153
                                              Tetra Cap Applicator 47 -0100
                                         48463-0001 ELD 001 AD 030612 JNT ECM:135545

REF.     BLOCK    NICKNAME   REF. DESCRIPTION / CROSS REFERENCES
-------  -------  -------- -------------------------------------
                            FBIO  370,(372),374,379
%R0704   _MAIN              FBIO  (370),(372),(374),(379)
%R0705   _MAIN              Copy of data word 3
                            FBIO  371,(372),375,380
%R0706   _MAIN              FBIO  (371),(372),(375),(380)
%R0721   _MAIN              Preheat pulse
                            FBIO  9,10
%R0722   _MAIN              Contin low speed
                            FBIO  (9),10
%R0723   _MAIN              Spare
                            FBIO  (9),10
%R0724   _MAIN              B917 connect
                            FBIO  (9),11
%R0725   _MAIN              Spare
                            FBIO  (9),11
%R0726   _MAIN              Current relay connect
                            FBIO  (9),11
%R0727   _MAIN              Alarm queue cap detect
                            FBIO  (9),12
%R0770   _MAIN              Reduced speed
                            FBIO  59,61,62,64,65,66,67
%R0775   1T0001   NEW_POS   New position
                            FBIO  54,63,65
%R0776   1T0001   OLD_POS   Old position
                            FBIO  56,58,63,65
%R0777   1T0001   DIF_POS   Diff in pos
                            FBIO  63
%R0778   1T0001   LOW_LIM   Angle update lower limit
                            FBIO  47,63
%R0779   1T0001   HI_LIM    Angle update higher limit
                            FBIO  47,63
%R0780   1T0001             Scan counter
                            FBIO  41,43
%R0781   1T0001             Angle encoder
                            FBIO  45,54
%R0782   1T0001             Delayed signal main motor
                            FBIO  51,52
%R0783   1T0001             Check encoder passing 0
                            FBIO  58,61
%R0784   1T0001             Speed main motor rph
                            FBIO  103,107
%R0785   1T0001             FBIO  (103),(107)
%R0786   1T0001             1 hour ms
                            FBIO  102
%R0787   1T0001             FBIO  (102)
%R0788   1T0001             1 package ms
                            FBIO  103,104,105
%R0789   1T0001             FBIO  (103)
%R0790   1T0001             1 hour ms
                            FBIO  102,103
%R0791   1T0001             FBIO  (102),(103)
%R0792   1T0001             10 machine cycles
                            FBIO  107,109,110
%R0793   1T0001             10 machine cycles
                            FBIO  (107),(109),(110)
%R0794   1T0001             Speed main motor rph
                            FBIO  109
%R0795   1T0001             FBIO  (109)
%R0796   1T0001             10 machine cycles
                            FBIO  106
%R0797   1T0001             FBIO  (106)
%R0798   1T0001             FBIO  (106)
%R0920   PLMS_5             Package in
                            FBIO  134,135,145
%R0921   PLMS_5             Package out
                            FBIO  141,142,(145)
%R0922   PLMS_5             Down time signals
                            FBIO  12,43,45,47,49,51,53,55,57,59,61,63,65,67,69,71,73
%R0923   PLMS_5             Down time signals
                            FBIO  12,43,75,77,79,82,85,87,89,91,93,95,97
%R0924   PLMS_5             Miscel-laneous signals
                            FBIO  8,13,16,18,19,21,22,24,25,27,28,30,31,33,34,36,37,39,40,43,101,103,107,111,114,116,127,144
%R0925   PLMS_5             Miscel-laneous signals
                            FBIO  13,43,119,121,123,125
%R0926   PLMS_5             Reserv for package in
                            FBIO  132,134,135,146
%R0927   PLMS_5             FBIO  (132),(146)
%R0928   PLMS_5             Reserv for package out
                            FBIO  138,140,141,142,(146)
%R0929   PLMS_5             FBIO  (138),(140),(146)
%R0950   PLMS_5             Package at belt brake
                            FBIO  130
%R0951   PLMS_5             FBIO  (130)
%R0952   PLMS_5             FBIO  (130)
%R0953   PLMS_5             Outfeed jammed
                            FBIO  137
%R0954   PLMS_5             FBIO  (137)
%R0955   PLMS_5             FBIO  (137)
%R0963   PLMS_5             Break enable signal
                            FBIO  6
%R0964   PLMS_5             FBIO  (6)
%R0965   PLMS_5             FBIO  (6)

Program: D484631                         C:\LM90\TCAP47\D484631                         Global Cross Reference Tables
```

```
06-16-03  10:35                          GE FANUC SERIES 90-30/90-20/MICRO (v9.02)                          Page   154
                                                Tetra Cap Applicator 47 -0100
                                          48463-0001 ELD 001 AD 030612 JNT ECM:135545

REF.     BLOCK    NICKNAME   REF. DESCRIPTION / CROSS REFERENCES
-------  -------  -------- -------------------------------------
%R1000   1T0001            Start eject package
                           FBIO  81,82
%R1001   1T0001            Reset packIn carrier chain
                           FBIO  83,84
%R1002   1T0001            Package eject ready
                           FBIO  89,90
%R1003   1T0001            Delay Extern package ejector
                           FBIO  91,93
%R1004   1T0001            Check missed cap on package
                           FBIO  95,96
%R1006   1T0001            Missing Cap on package
                           FBIO  86,87
%R1007   1T0001            Count missing Cap on package
                           FBIO  98,99

==============================================================================
==========  SYSTEM REFERENCE  (%S)  GLOBAL CROSS REFERENCES
==============================================================================
REF.     BLOCK    NICKNAME   REF. DESCRIPTION / CROSS REFERENCES
-------  -------  -------- -------------------------------------
%S0001   _MAIN    FST_SCN  -] [- 61,62,201,365
                           -]/[- 28
         1T0001   FST_SCN  -] [- 49
%S0005   1T0001   T_SEC    -] [- 94
%S0006   _MAIN    T_MIN    -] [- 194
%S0007   _MAIN    ALW_ON   -] [- 9,10,11,12,72,376,382
         PLMS_5   ALW_ON   -] [- 22,25,73,97,116,144
         1T0001   ALW_ON   -] [- 5,6,16,17,18,19,20,21,22,23,24,25,26,27,28,35,36,37,41,47,60,112
%S0008   _MAIN    ALW_OFF  -] [- 137,373,374,375,378,379,380
                           -]/[- 238
         PLMS_5   ALW_OFF  -] [- 21,24,47,55,57,63,121,123,125
%S0011   _MAIN    OVR_PRE  -] [- 232
%S0014   _MAIN    PLC_BAT  -] [- 232

==============================================================================
==========  IDENTIFIER NAME GLOBAL CROSS REFERENCES
==============================================================================
IDENTIFIER   BLOCK    REF. DESCRIPTION / CROSS REFERENCES
----------   -------  ----------------------------------
PLMS_5       _MAIN    Signals for PLMS
                      CALL  382
```

EM1.1TH900627en.fm

06-16-03 10:38 GE FANUC SERIES 90-30/90-20/MICRO (v9.02) Page 155
Tetra Cap Applicator 47 -0100
48463-0001 ELD 001 AD 030612 JNT ECM:135545

RACK 0

PS	1	2	3	4	5	6	7	8	9	10
PROGRAMMED CONFIGURATION										
PWR321	CPU363	MDL646	MDL646	MDL646	MDL742	MDL742	MDL742	MDL646	MDL742	
		I DC16	I DC16	I DC16	Q DC16	Q DC16	Q DC16	I DC16	Q DC16	
		RefAdr %I0001	RefAdr %I0017	RefAdr %I0033	RefAdr %Q0001	RefAdr %Q0017	RefAdr %Q0033	RefAdr %I0049	RefAdr %Q0049	

EM1.1TH900627en.fm

```
06-16-03  10:38                          GE FANUC SERIES 90-30/90-20/MICRO (v9.02)                          Page   156
                                                Tetra Cap Applicator 47 -0100
                                          48463-0001 ELD 001 AD 030612 JNT ECM:135545

      SERIES 90-30 MODULE IN RACK 0 SLOT  0
┌──────────────────────────── SOFTWARE  CONFIGURATION ────────────────────────────
│ SLOT   Catalog #: IC693PWR321            PWR SUP 120/240VAC, 125VDC STD
│   0
│
│PWR321──────────────────────────────────────────────────────────────────────────
│
│
│
│
│
│
│
│
│
└──────

      SERIES 90-30 MODULE IN RACK 0 SLOT  1
────────────────────────────── SOFTWARE  CONFIGURATION ────────────────────────────
│ SLOT   Catalog #: IC693CPU363            SERIES 90-30 CPU, MODEL 363
│   1
│
│CPU363──────────────────────────────────────────────────────────────────────────
│        IOScan-Stop: NO        Baud Rate  : 19200
│        Pwr Up Mode: LAST      Parity     : ODD
│        Logic/Cfg  : RAM       Stop Bits  : 1
│        Registers  : RAM       Modem TT   :   0       1/100 Second / Count
│        Passwords  : ENABLED   Idle Time  :  10       Seconds
│        R/S Switch : DISABLED
│        Mem Protect: DISABLED
│        Chksum Wrds:   8       Sweep Mode : CNST SWP
│        Tmr Faults : DISABLED  Sweep Tmr  :    10     msec
└──────

      SERIES 90-30 MODULE IN RACK 0 SLOT  1
────────────────────────────── SOFTWARE  CONFIGURATION ────────────────────────────
│ SLOT   Catalog #: IC693CPU363            SERIES 90-30 CPU, MODEL 363
│   1
│
│CPU363──────────────────────────────────────────────────────────────────────────
│        Port 1 Mode: SNP       Port 2 Mode: SNP
│        SNP Mode   : SLAVE     SNP Mode   : SLAVE
│        Baud Rate  : 19200     Baud Rate  : 19200
│        Flow Contrl: NONE      Flow Contrl: NONE
│        Parity     : ODD       Parity     : ODD
│        Stop Bits  : 1         Stop Bits  : 1
│        Timeout    : LONG      Timeout    : LONG
│        TurnA Delay:   0       TurnA Delay:   0
│        SNP ID     :           SNP ID     :
└──────

      SERIES 90-30 MODULE IN RACK 0 SLOT  2
────────────────────────────── SOFTWARE  CONFIGURATION ────────────────────────────
│ SLOT   Catalog #: IC693MDL646            INPUT 24 VDC 16PT POS/NEG FAST
│   2    Ref Addr :   %I0001               Size  : 16
│
│MDL646──────────────────────────────────────────────────────────────────────────
│
│I DC16
│
│
│
│RefAdr
│%I0001
│
│
└──────

Folder: C:\LM90\TCAP47\D484631                                                                                  Slot
```

EM1.1TH900627en.fm

```
06-16-03  10:38                          GE FANUC SERIES 90-30/90-20/MICRO (v9.02)                          Page   157
                                              Tetra Cap Applicator 47 -0100
                                         48463-0001 ELD 001 AD 030612 JNT ECM:135545

      SERIES 90-30 MODULE IN RACK 0 SLOT  3
┌──────┬──────────────────── SOFTWARE  CONFIGURATION ──────────────────────────
│ SLOT │  Catalog #: IC693MDL646            INPUT 24 VDC 16PT POS/NEG FAST
│   3  │  Ref Addr :   %I0017               Size  : 16
│      │
│MDL646├──────────────────────────────────────────────────────────────────────
│      │
│I DC16│
│      │
│      │
│      │
│RefAdr│
│%I0017│
│      │
│      │
│      │
└──────┘

      SERIES 90-30 MODULE IN RACK 0 SLOT  4
┌──────┬──────────────────── SOFTWARE  CONFIGURATION ──────────────────────────
│ SLOT │  Catalog #: IC693MDL646            INPUT 24 VDC 16PT POS/NEG FAST
│   4  │  Ref Addr :   %I0033               Size  : 16
│      │
│MDL646├──────────────────────────────────────────────────────────────────────
│      │
│I DC16│
│      │
│      │
│      │
│RefAdr│
│%I0033│
│      │
│      │
│      │
└──────┘

      SERIES 90-30 MODULE IN RACK 0 SLOT  5
┌──────┬──────────────────── SOFTWARE  CONFIGURATION ──────────────────────────
│ SLOT │  Catalog #: IC693MDL742            OUTPUT 12/24 VDC 1A 16PT POS
│   5  │  Ref Addr :   %Q0001               Size  : 16
│      │
│MDL742├──────────────────────────────────────────────────────────────────────
│      │
│Q DC16│
│      │
│      │
│      │
│RefAdr│
│%Q0001│
│      │
│      │
│      │
└──────┘

      SERIES 90-30 MODULE IN RACK 0 SLOT  6
┌──────┬──────────────────── SOFTWARE  CONFIGURATION ──────────────────────────
│ SLOT │  Catalog #: IC693MDL742            OUTPUT 12/24 VDC 1A 16PT POS
│   6  │  Ref Addr :   %Q0017               Size  : 16
│      │
│MDL742├──────────────────────────────────────────────────────────────────────
│      │
│Q DC16│
│      │
│      │
│      │
│RefAdr│
│%Q0017│
│      │
│      │
│      │
└──────┘

Folder: C:\LM90\TCAP47\D484631                                                                                  Slot
```

EM1.1TH900627en.fm

```
06-16-03  10:38                          GE FANUC SERIES 90-30/90-20/MICRO (v9.02)                          Page   158
                                                  Tetra Cap Applicator 47 -0100
                                          48463-0001 ELD 001 AD 030612 JNT ECM:135545

      SERIES 90-30 MODULE IN RACK 0 SLOT  7
 ------------------------- SOFTWARE  CONFIGURATION ---------------------------
 SLOT   Catalog #: IC693MDL742            OUTPUT 12/24 VDC 1A 16PT POS
    7   Ref Addr :   %Q0033              Size  : 16
 MDL742-------------------------------------------------------------------
 Q DC16
 RefAdr
 %Q0033

      SERIES 90-30 MODULE IN RACK 0 SLOT  8
 ------------------------- SOFTWARE  CONFIGURATION ---------------------------
 SLOT   Catalog #: IC693MDL646            INPUT 24 VDC 16PT POS/NEG FAST
    8   Ref Addr :   %I0049              Size  : 16
 MDL646-------------------------------------------------------------------
 I DC16
 RefAdr
 %I0049

      SERIES 90-30 MODULE IN RACK 0 SLOT  9
 ------------------------- SOFTWARE  CONFIGURATION ---------------------------
 SLOT   Catalog #: IC693MDL742            OUTPUT 12/24 VDC 1A 16PT POS
    9   Ref Addr :   %Q0049              Size  : 16
 MDL742-------------------------------------------------------------------
 Q DC16
 RefAdr
 %Q0049

Folder: C:\LM90\TCAP47\D484631                                                                                  Slot
```

EM1.1TH900627en.fm

14 Other information

EM1.1TH900626en.fm

This page intentionally left blank

EM1.1TH900626en.fm

Tetra Pak