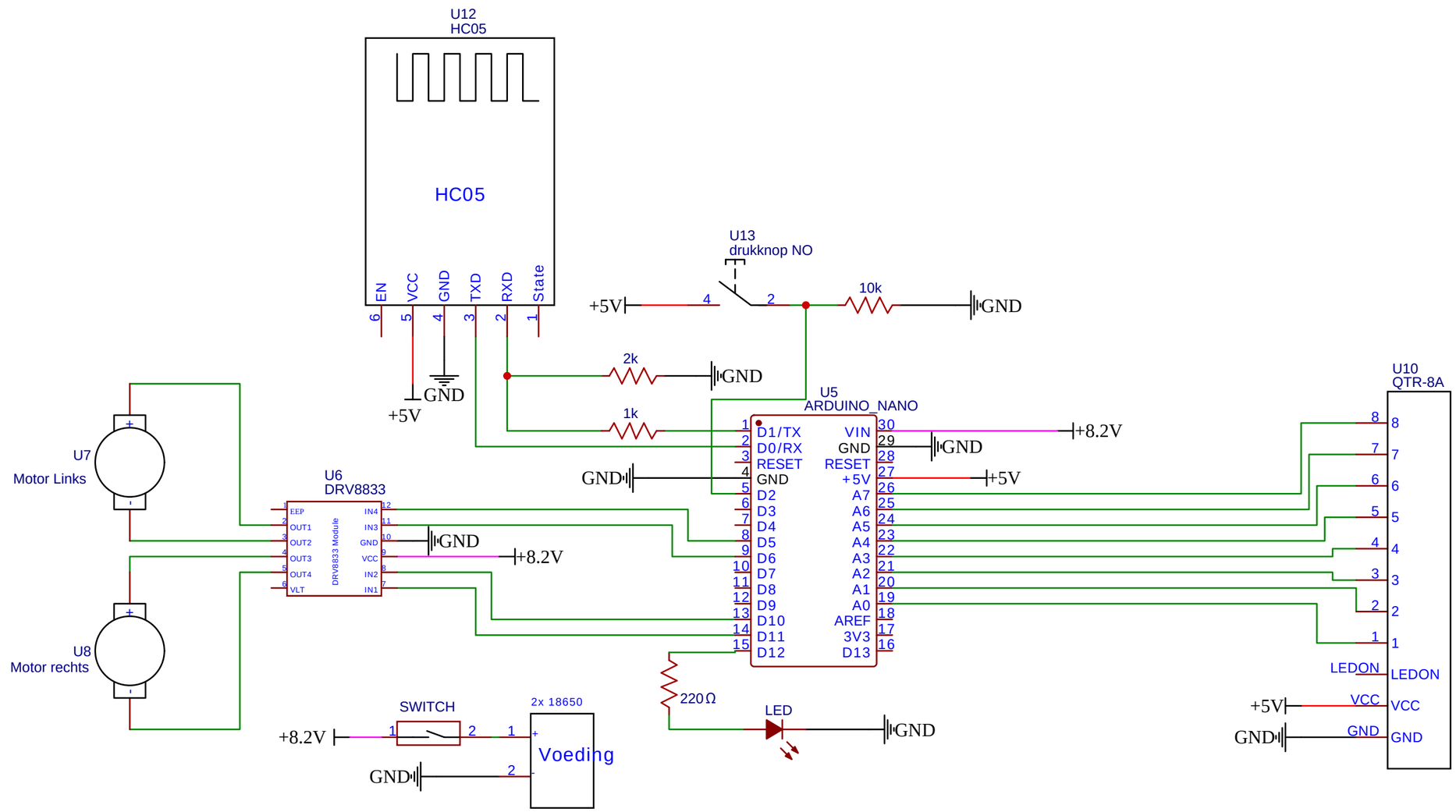

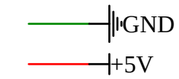

TITLE: Sheet_5		REV: 1.0
嘉立创EDA	Company: Your Company	Sheet: 1/1
	Date: 2022-12-12 Drawn By: xander5848	