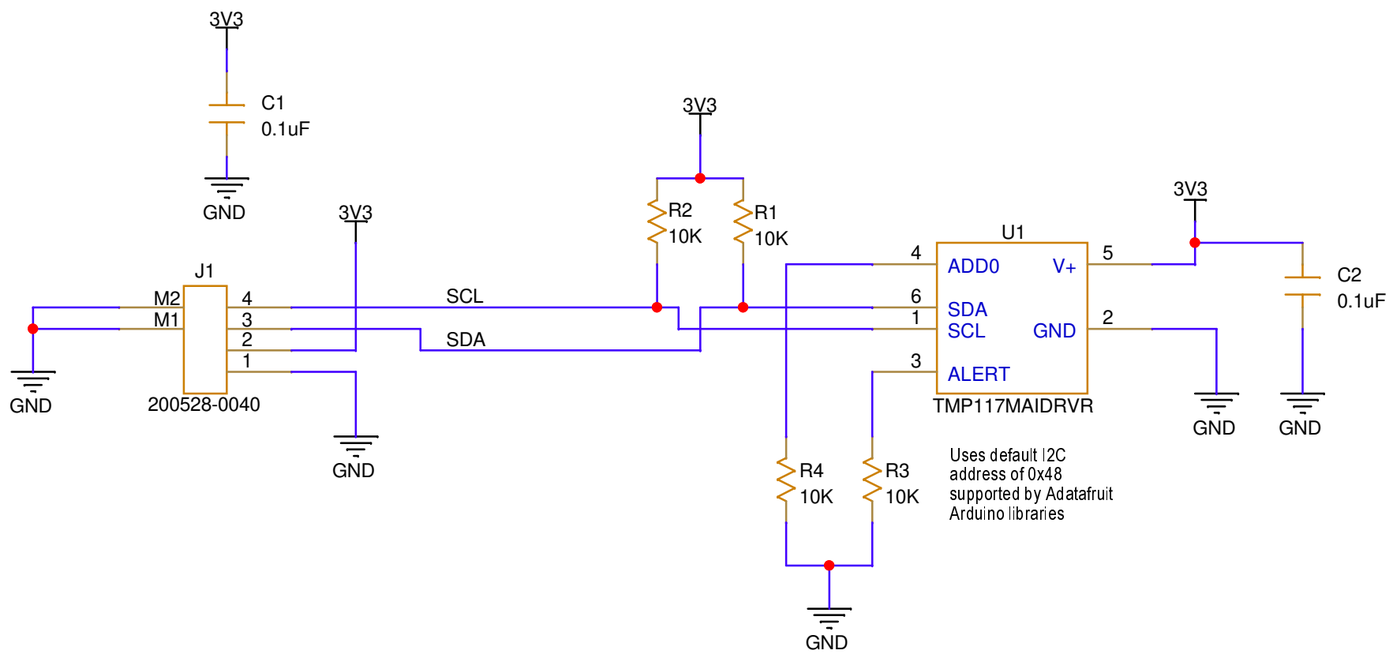

Title	FPC Temperature Sensor - I2C	
Size A	Document Number <Doc>	Rev 1
Date: Wednesday, June 25, 2025	Sheet 1 of 1	