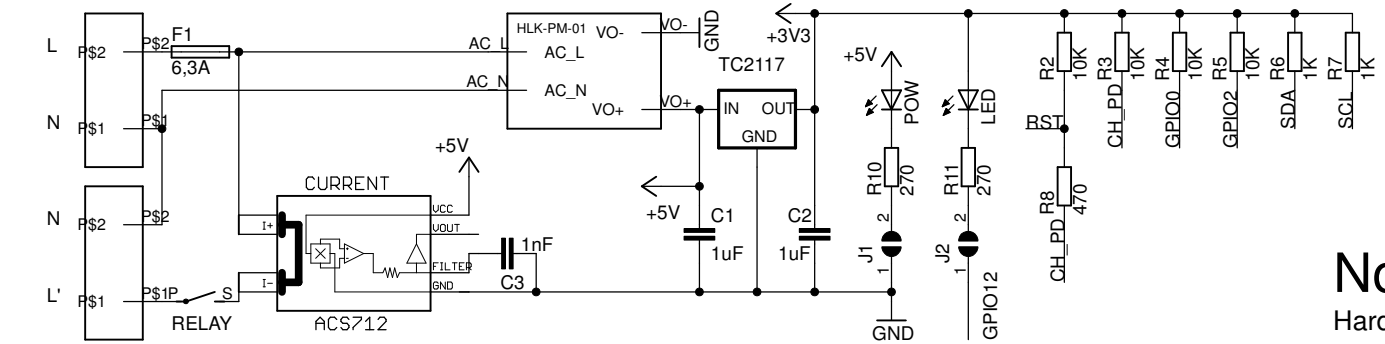

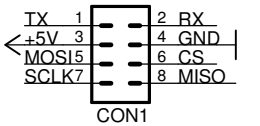

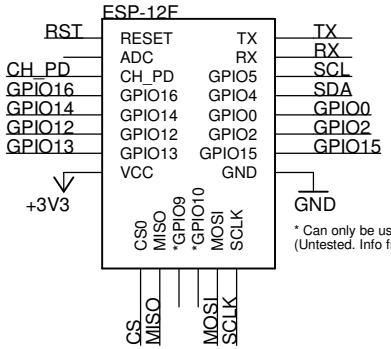

* Can only be used on the ESP12-D
(Untested. Info from esp8266 wiki)

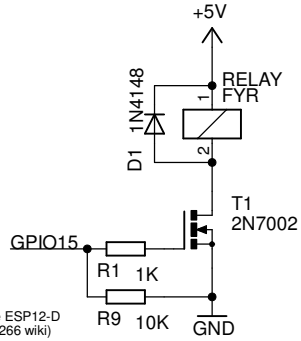

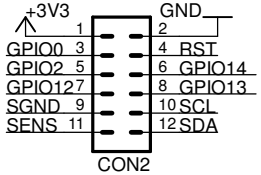

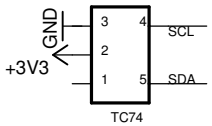

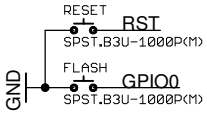

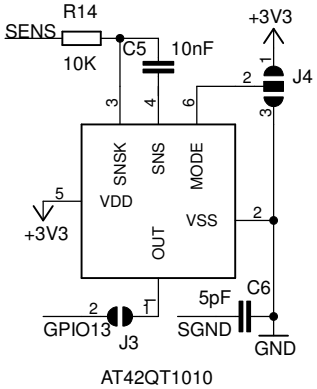

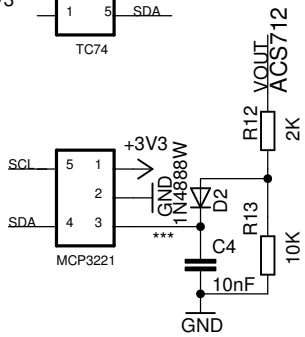

*** Reference ACS712 datasheet
page 10,Application 4.

Notes

Hardware

TC74	I²C Thermal Sensor -65C - +127C, 100 kHz
MCP3221	I²C 12-Bit A/D Converter 1 Channel, 400 kHz, 100kHz
ACS712	20A Current Sensor 2.1 kVRMS Voltage Isolation
AT42QT1010	Capacitive Touch Sensor Fast and Slow Mode

Description

J1	Power LED
J2	LED on GPIO12
J3	Touch Sensor on GPIO13
J4	Touch Sensor Mode L-slow Mode, H-fast Mode

Current sensing through MCP3221
Relay connected to GPIO15

Released under the Creative Commons Attribution Share-Alike 4.0 License
http://creativecommons.org/licenses/by-sa/4.0
Design by: DOC

open hardware

Electronic Solutions

TITLE: esp-wifi-sensor-switch

Document Number: REV:

Date: 21.01.2017 14:51:04 Sheet: 1/1