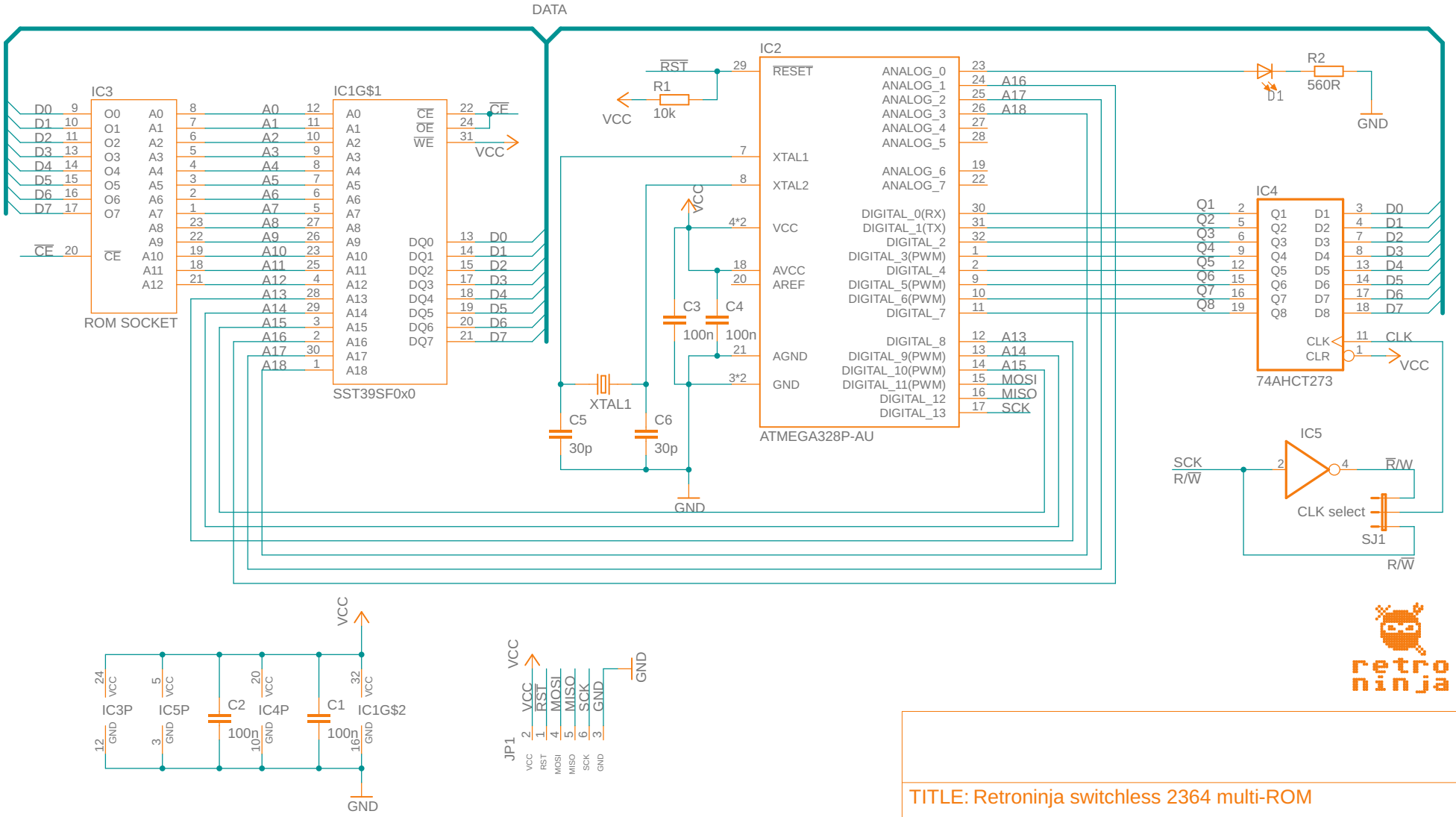

TITLE: Retroninja switchless 2364 multi-ROM

Document Number:

REV: 3

Date: 17 August 2021

Sheet: 1/1