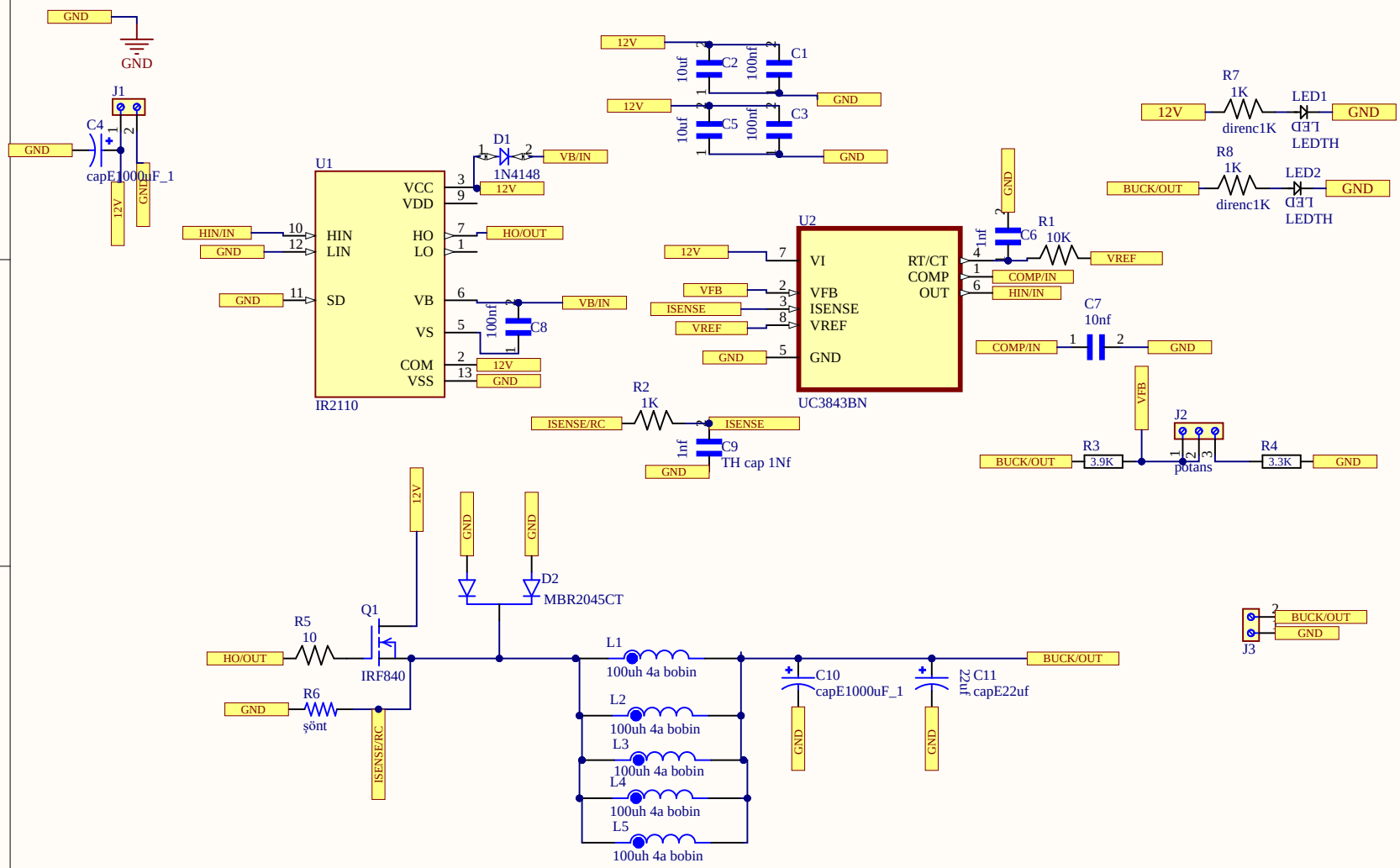

Title		
Size A4	Number	Revision
Date: 9.29.2025		Sheet of
File: C:\Users\..\Sheet1.SchDoc		Drawn By:

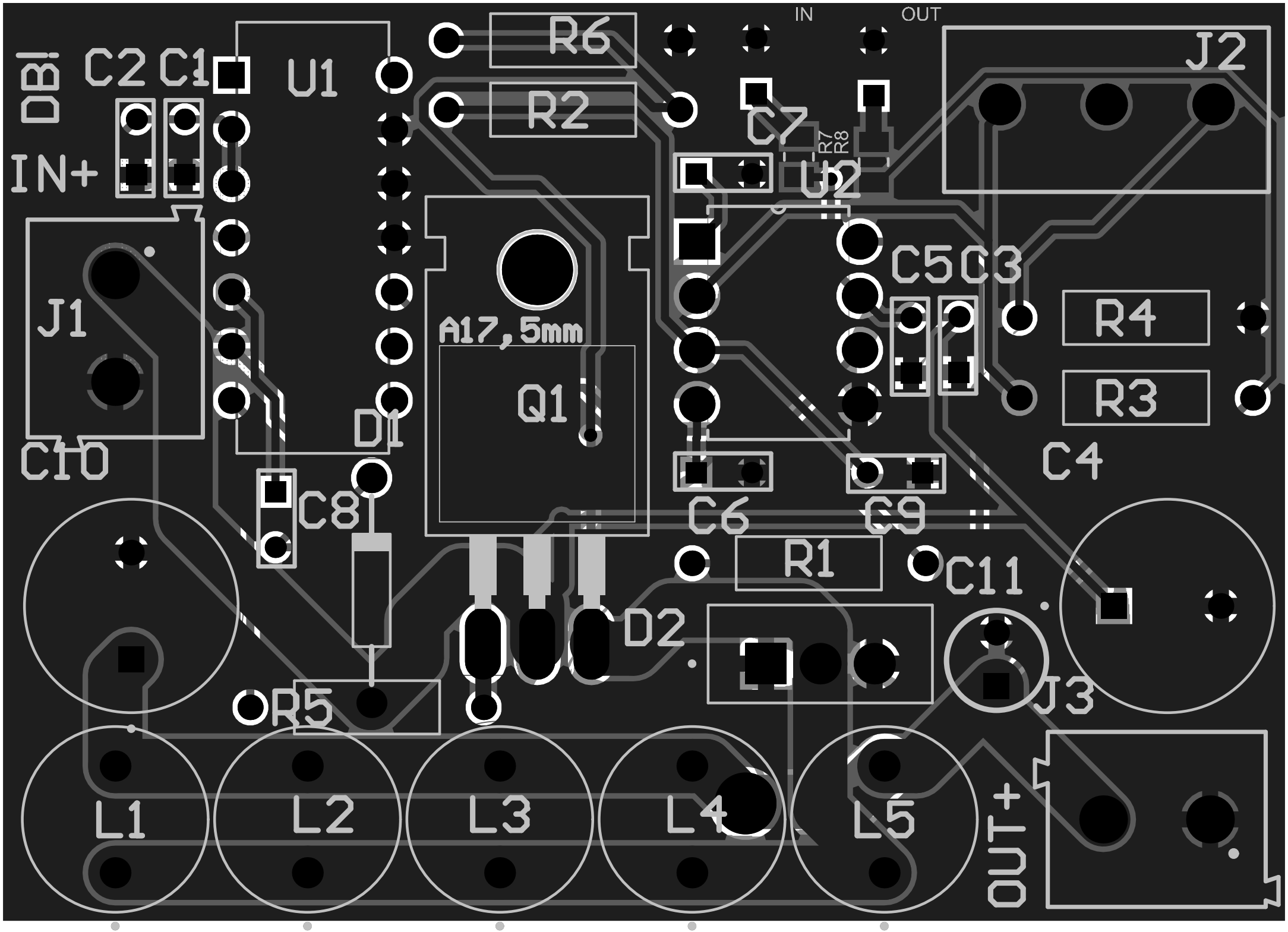
DBI
C2
C1
IN+
U1
R6
R2
IN
OUT
J2
C7
R7
R8
U2
J1
A17,5mm
Q1
C5
C3
R4
R3
D1
C10
C8
C6
C9
C4
R1
C11
D2
R5
J3
L1
L2
L3
L4
L5
OUT+