Base (Gallium East)

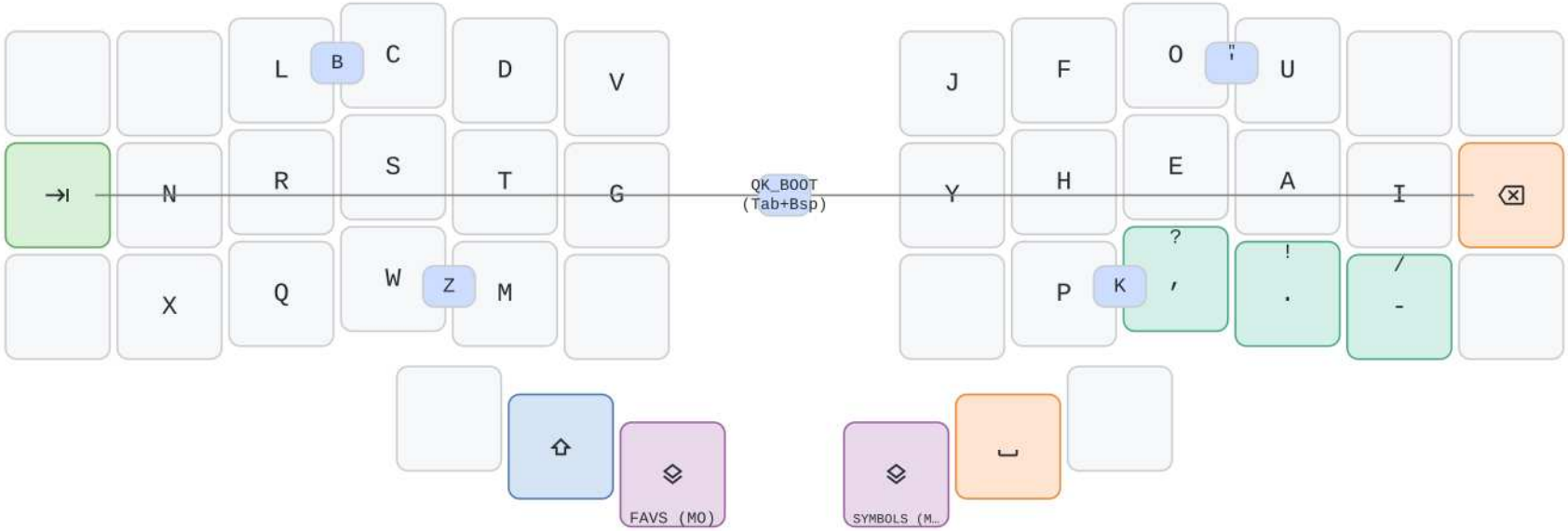

FAVS

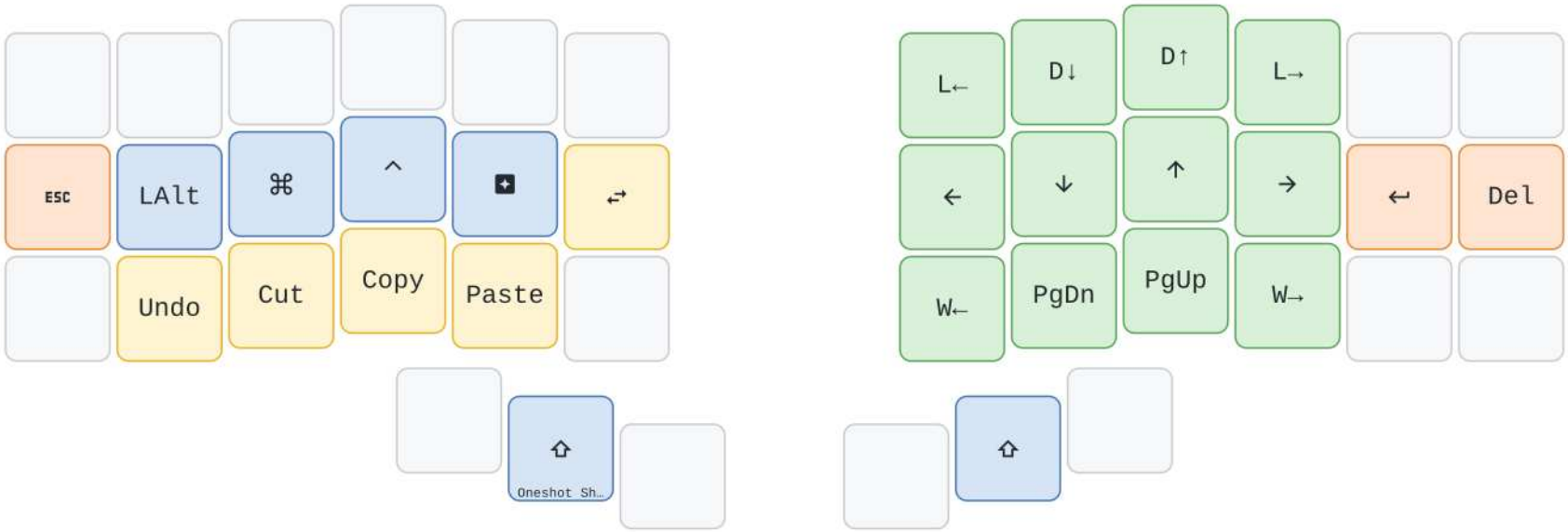

SYMBOLS

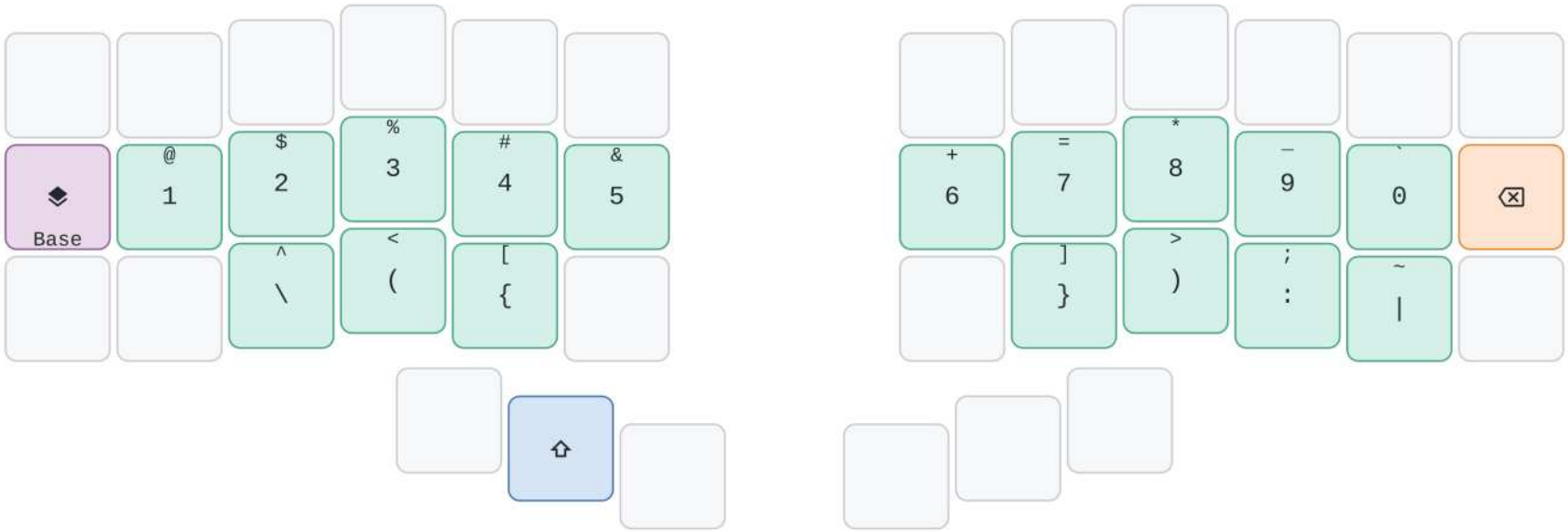

ACCENTS

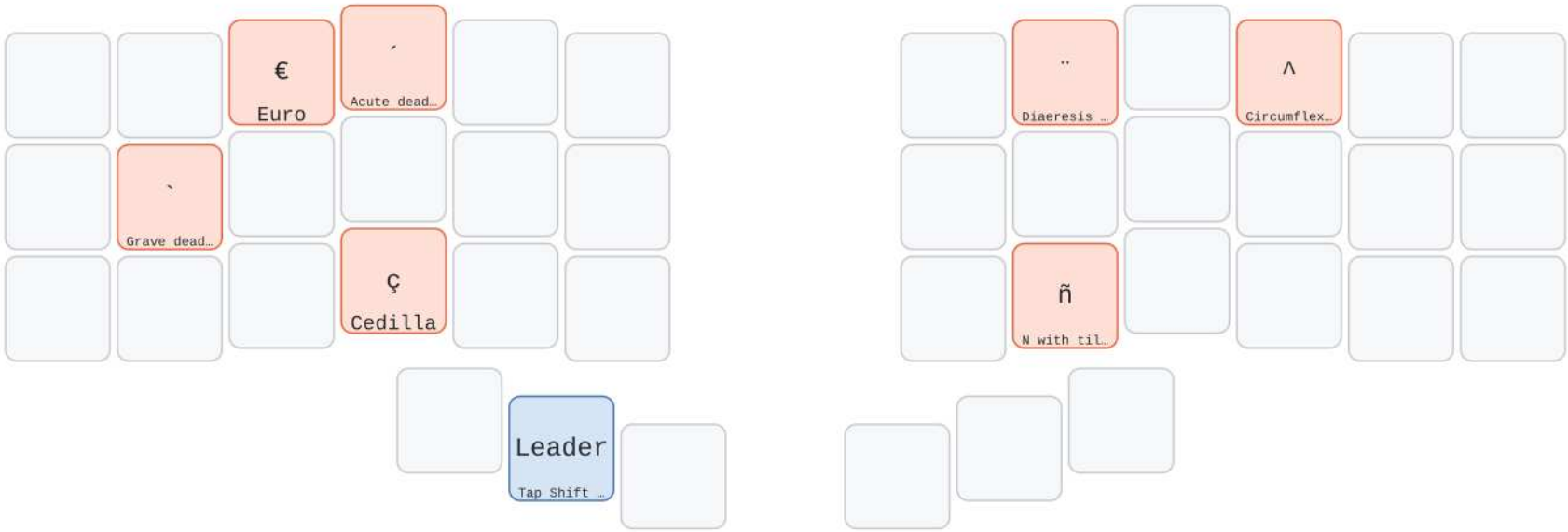
€
Euro
´
Acute dead…
`
Grave dead…
Ç
Cedilla
Leader
Tap Shift …
¨
Diaeresis …
^
Circumflex…
ñ
N with til…