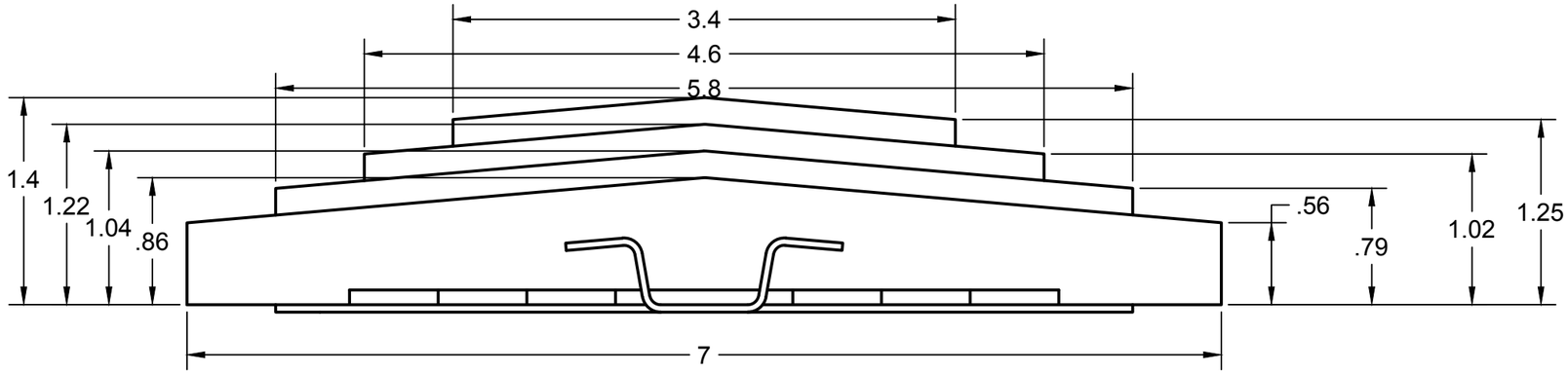

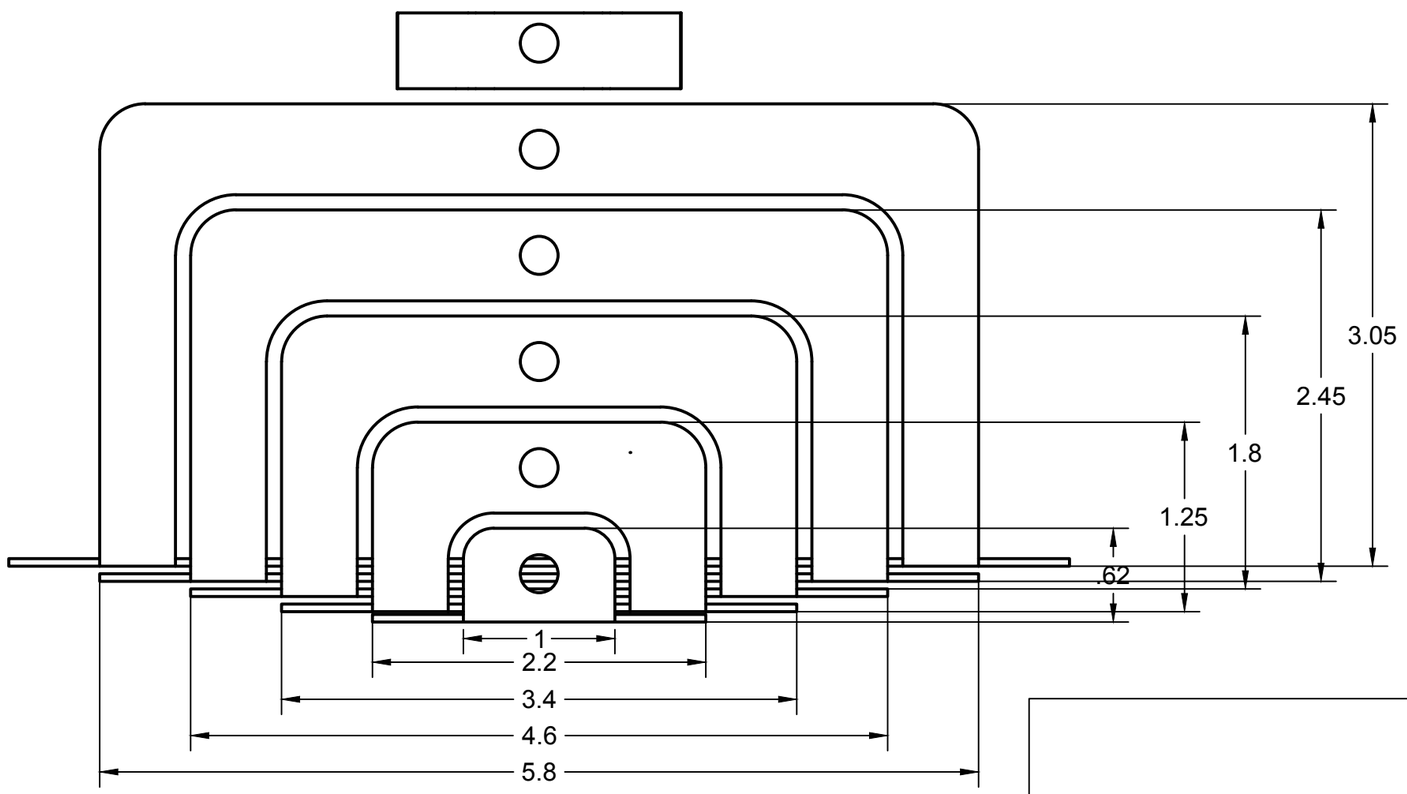

	PROJECT Bridgeport			
	TITLE Way Cover 7			
APPROVED	SIZE	CODE	DWG NO	REV
CHECKED	B			
DRAWN Daniel Matthews 11/9/2019	SCALE 1:1	WEIGHT	SHEET 1/1	