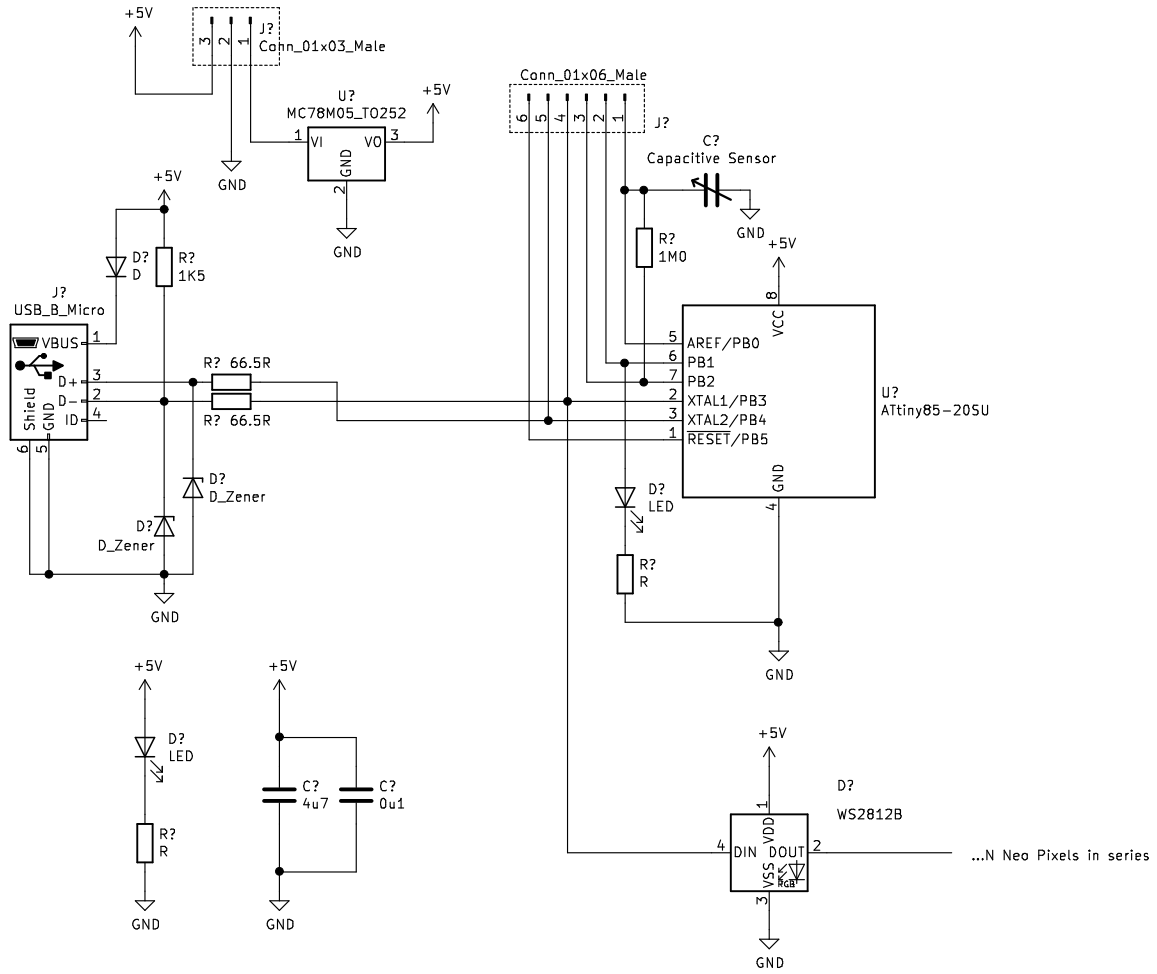

Sheet: /
File: captouch_digispark_lights.sch

Title: Digispark ATTiny85 clone (micro USB) 5V board with capacitive touch control for neo pixels

Size: A4	Date: 2019-02-20	**Rev:** 0.1
KiCad E.D.A. eeschema 5.0.2-bee76a070ubuntu18.04.1		Id: 1/1