| CLOMN SIZE | BASE PLATE | | | | ANCHOR RODS | | | GROUT | WELD | PL WASHER | |
|---|---|---|---|---|---|---|---|---|---|---|---|
| | A | B | C | D | No. | E | F | G | W1 | P1 | W2 |
| 3½"Ø | ¾" | 12" | 12" | 2" | 4 | 1"Ø | 12" | 2" | ¼" | 3/16"x2½"x2½" | 3/16" |
| | | | | | | | | | | | |
| | | | | | | | | | | | |
| | | | | | | | | | | | |

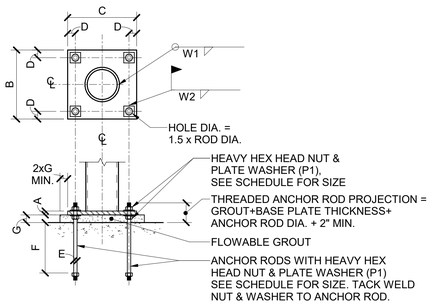


13 COLUMN BASE PLATE AND ANCHOR ROD SCHEDULE/ DETAIL

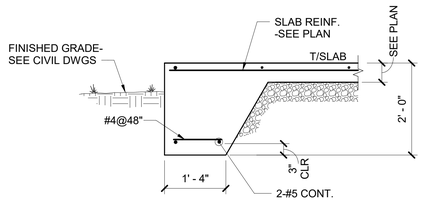


12 SECTION

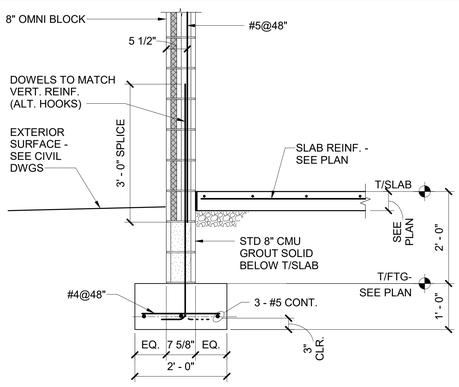


11 SECTION AT EXTERIOR WALL FOOTING

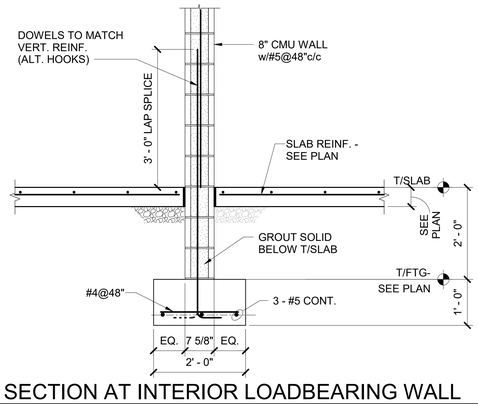


10 SECTION AT INTERIOR LOADBEARING WALL

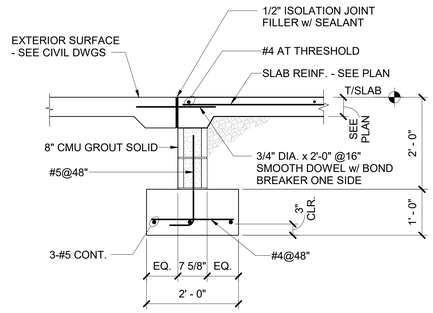


9 SECTION AT DOOR

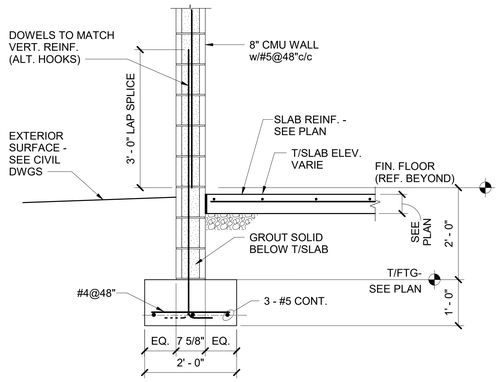


8 SECTION

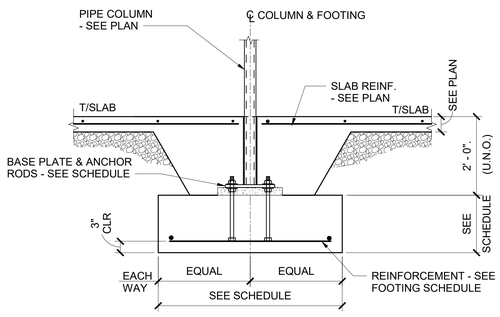


7 SECTION AT HSS COLUMN

| MARK | SIZE | REINF. EW BOT. | PEDESTAL | | | REMARKS |
|---|---|---|---|---|---|---|
| | | | SIZE | REINF. | TIES | |
| F3.0 | 3'-0"x3'-0"x1'-3" | 4-#5 | | | | |
| | | | | | | |
| | | | | | | |
| | | | | | | |
| | | | | | | |
| | | | | | | |
| | | | | | | |
| | | | | | | |
| | | | | | | |
| | | | | | | |
| | | | | | | |

6 COLUMN FOOTING AND PEDESTAL SCHEDULE

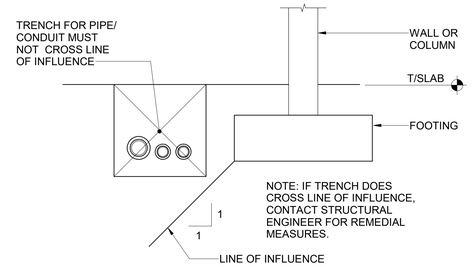


5E PIPE/CONDUIT TRENCH PARALLEL TO FOOTING

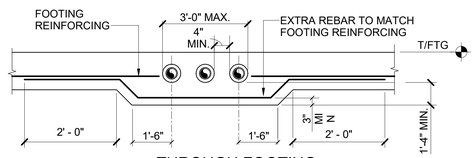


THROUGH FOOTING

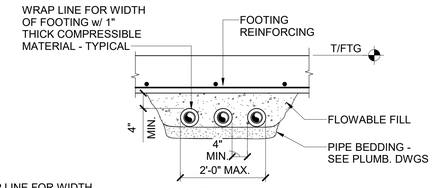


UNDER FOOTING
(PIPES PLACED AFTER FOOTING)

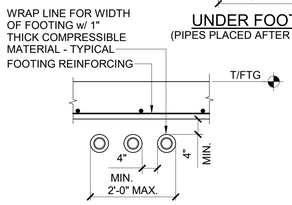


UNDER FOOTING
(PIPES PLACE PRIOR TO FOOTING)

5D PIPE/CONDUIT LINES PERPENDICULAR

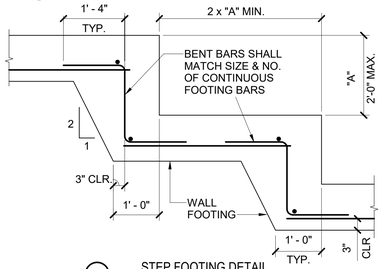


5C STEP FOOTING DETAIL

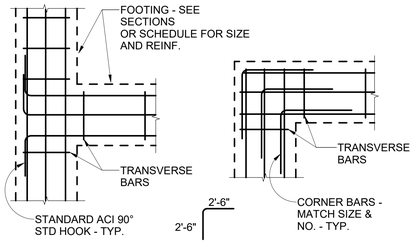


5B FOOTING CORNER REINFORCEMENT

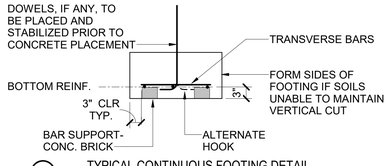


5A TYPICAL CONTINUOUS FOOTING DETAIL

5 TYPICAL FOOTING DETAILS

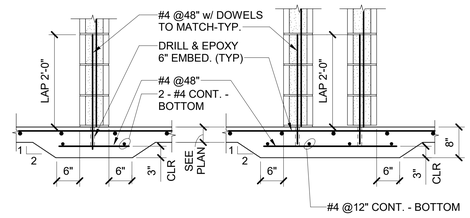


AT CONTINUOUS SLAB AT DOUBLE WALL

4 THICKENED SLAB AT NON-LOADBEARING CMU WALLS

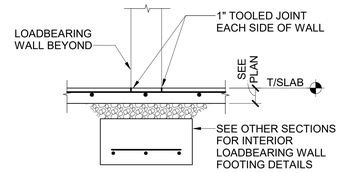


3 CONTRACTION JOINT AT DOORS

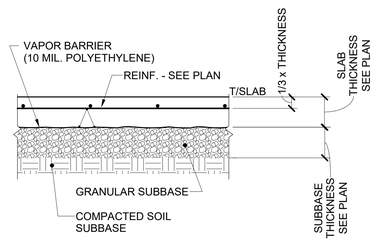


2 TYPICAL SLAB SECTION

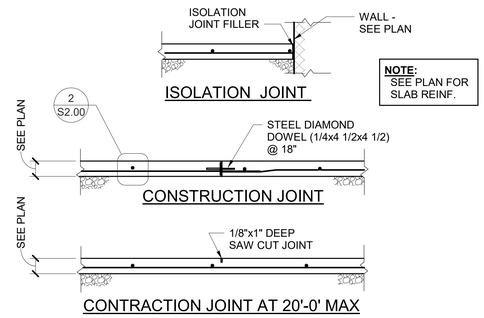


1 TYPICAL SLAB-ON GRADE DETAILS


GMC
Goodwyn Mills Cawood, LLC
3310 West End Avenue, Suite 420
Nashville, TN 37203
T 615.333.7200
GMCNETWORK.COM


| ISSUE | DATE |
|---|---|
| PERMIT DOCUMENTS | 12/12/2023 |

DRAWN BY: RV
CHECKED BY: JHP


Structural Design Group
220 Great Circle Road, Suite 106
Nashville, Tennessee 37228
p. 615.255.5537
f. 615.255.1486


SDG Project No. 2023-211.00

FRANKLIN CO. ANIMAL CONTROL FACILITY
GEARGE FRALEY PARKWAY
WINCHESTER, TN 37398

GMC #ANAS230037

JAMES H. PARKER III — 12/12/23 — STATE OF TENNESSEE

FOUNDATION SECTIONS AND DETAILS

S2.00

12/12/2023 11:04:57 AM