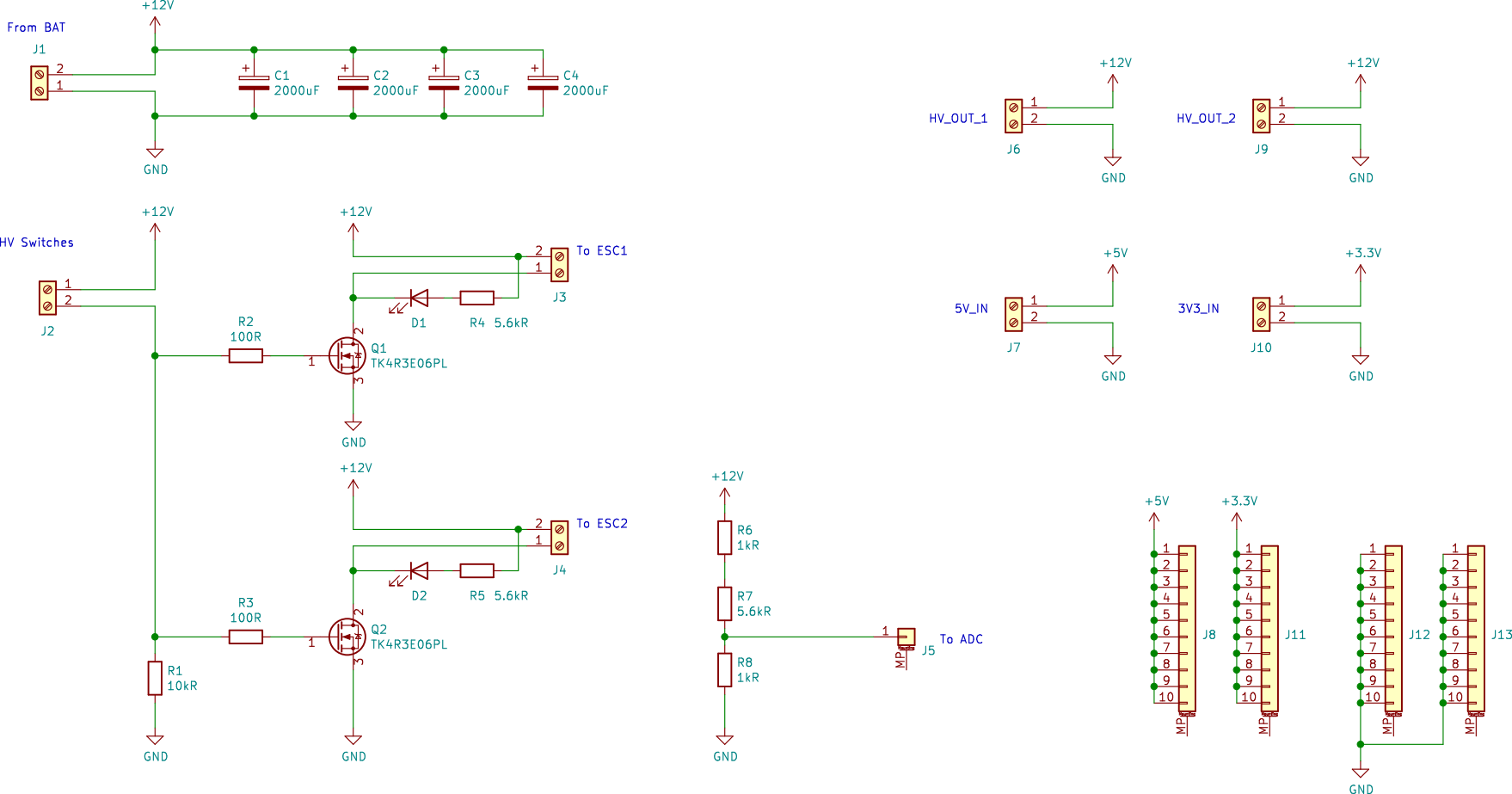
From BAT
J1
+12V
C1
2000uF
C2
2000uF
C3
2000uF
C4
2000uF
GND
HV_OUT_1
J6
HV_OUT_2
J9
5V_IN
J7
3V3_IN
J10
+5V
+3.3V
HV Switches
J2
R2
100R
Q1
TK4R3E06PL
D1
R4 5.6kR
To ESC1
J3
R3
100R
Q2
TK4R3E06PL
D2
R5 5.6kR
To ESC2
J4
R1
10kR
R6
1kR
R7
5.6kR
R8
1kR
To ADC
J5
MP
J8
J11
J12
J13