3 The MPEG Data Stream

The abbreviation MPEG, first of all, stands for Moving Pictures Experts Group, that is to say MPEG deals mainly with the digital transmission of moving pictures. However, the data signal defined in the MPEG-2 Standard can also generally carry data which have nothing at all to do with video and audio and could be Internet data, for example. And indeed, throughout the world there are MPEG applications in which it would be futile to look for video and audio signals. Thus, in Wollongong, about 70 km south of Sydney in Australia, an Australian pay TV provider is operating a pure data broadcasting service using MPEG-2 data signals via MMDS (Microwave Multipoint Distribution System). "Austar" are here providing their customers with fast Internet links in the Mbit/s range.

MPEG = Moving Pictures Expert Group

MPEG-1	MPEG-2	MPEG-4	MPEG-7	MPEG-21
Part1: systems ISO/IEC11172-1 "PES layer"	Part1: systems ISO/IEC13818-1 "Transportation"	Part1: systems ISO/IEC14496	Metadata, XML based ISO/IEC15938 "Multimedia Content Description Interface"	additional "tools" ISO/IEC21000
Part2: video ISO/IEC11172-2	Part2: video ISO/IEC13818-2	Part2: video ISO/IEC14496-2		
Part3: audio ISO/IEC11172-3	Part3: audio ISO/IEC13818-3	Part3: audio (AAC) ISO/IEC14496-3		
	Part6: DSM-CC ISO/IEC13818-6	Part10: video (AVC, H.264) ISO/14496-10		
	Part7: AAC ISO/IEC13818-7			

Fig. 3.1. MPEG standards

As in the MPEG Standard itself, first the general structure of the MPEG data signal will be described in complete isolation from video and audio. An understanding of the data signal structure is also of greater importance

in practice than a detailed understanding of the video and audio coding which will be discussed later.

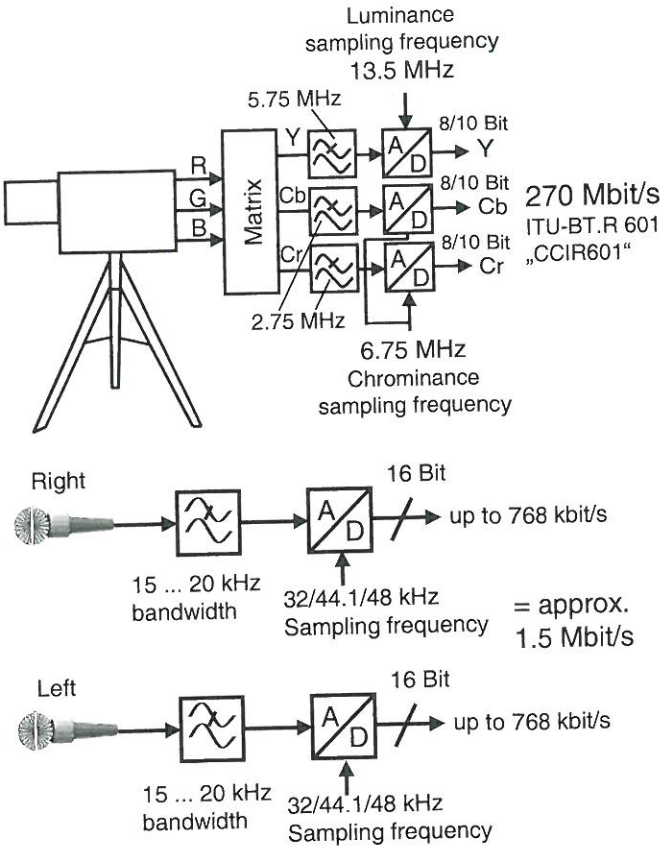

Fig. 3.2. Video and audio data signals

All the same, the description of the data signal structure will begin with the uncompressed video and audio signals. An SDTV (Standard Definition Television) signal without data reduction has a data rate of 270 Mbit/s and a digital stereo audio signal in CD quality has a data rate of about 1.5 Mbit/s (Fig. 3.2.).

The video signals are compressed to about 1 Mbit/s in MPEG-1 and to about 2 - 7 Mbit/s in MPEG-2. The video data rate can be constant or variable (statistical multiplex). The audio signals have a data rate of about 100 - 400 kbit/s (mostly 192 kbit/s) after compression (to be discussed in a

separate chapter) but the audio data rate is always constant and a multiple of 8 kbit/s. The compression itself will be dealt with in a separate chapter. The compressed video and audio signals in MPEG are called "elementary streams", ES in brief. There are thus video streams, audio streams and, quite generally, data streams, the latter containing any type of compressed or uncompressed data. Immediately after having been compressed (i.e. encoded), all the elementary streams are divided into variable-length packets, both in MPEG-1 and in MPEG-2 (Fig. 3.3.).

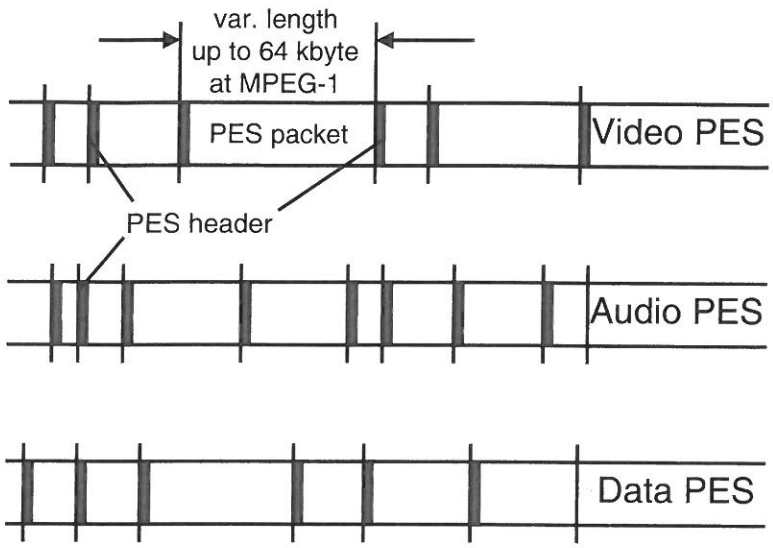

Fig. 3.3. MPEG Elementary Streams

Since it is possible to have sometimes more and sometimes less compression depending on the instantaneous video and audio content, variable-length containers are needed in the data signal. These containers carry one or more compressed frames in the case of the video signal and one or more compressed audio signal segments in the case of the audio signal. These elementary streams (Fig. 3.3.) thus divided into packets are called "packetized elementary streams", or simply PES for short. Each PES packet usually has a size of up to 64 kbytes. It consists of a relatively short header and of a payload. The header contains inter alia a 16-bit-long length indicator for the maximum packet length of 64 kbytes. The payload part contains either the compressed video and audio streams or a pure data stream. According to the MPEG Standard, however, the video packets can also be longer than 64 kbytes in some cases. The length indicator is then set to

zero and the MPEG decoder has to use other mechanisms for finding the end of the packet.

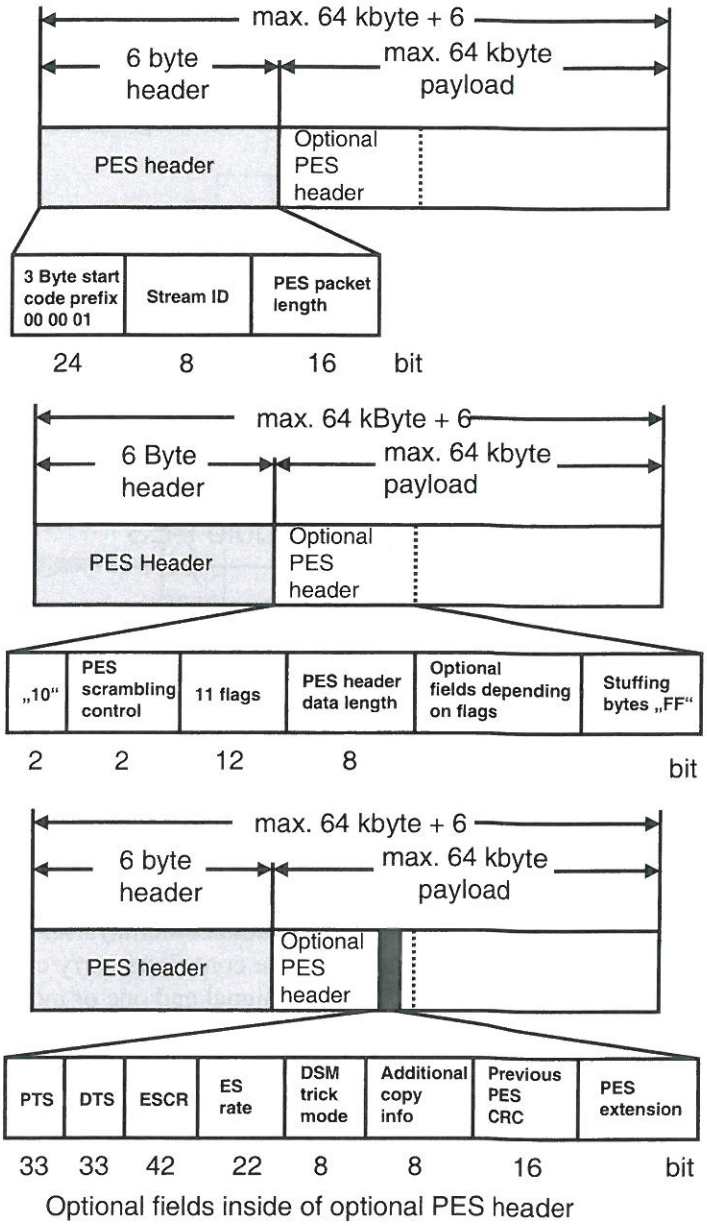

Fig. 3.4. The PES packet

3.1 The Packetized Elementary Stream (PES)

All elementary streams in MPEG are first packetized in variable-length packets called PES packets. The packets, which primarily have a length of 64 kbytes, begin with a PES header of 6 bytes minimum length. The first 3 bytes of this header represent the "start code prefix", the content of which is always 00 00 01 and which is used for identifying the start of a PES packet. The byte following the start code is the "stream ID" which describes the type of elementary stream following in the payload. It indicates whether it is, e.g. a video stream, an audio stream or a data stream which follows. After that there are two "packet length" bytes which are used to address the up to 64 kbytes of payload. If both of these bytes are set to zero, a PES packet having a length which may exceed these 64 kbytes can be expected. The MPEG decoder then has to use other arrangements to find the PES packet limits, e.g. the start code.

After these 6 bytes of PES header, an "optional PES header" is transmitted which is an optional extension of the PES header and is adapted to the requirements of the elementary stream currently being transmitted. It is controlled by 11 flags in a total of 12 bits in this optional PES header. These flags show which components are actually present in the "optional fields" in the optional PES header and which are not. The total length of the PES header is shown in the "PES header data length" field. The optional fields in the optional header contain, among other things, the "Presentation Time Stamps" (PTS) and the "decoding time stamps" (DTS) which are important for synchronizing video and audio. At the end of the optional PES header there may also be stuffing bytes. Following the complete PES header, the actual payload of the elementary stream is transmitted which can usually be up to 64 kbytes long or even longer in special cases, plus the optional header.

In MPEG-1, video PES packets are simply multiplexed with PES packets and stored on a data medium (Fig. 3.5.). The maximum data rate is about 1.5 Mbit/s for video and audio and the data stream only includes a video stream and an audio stream.

This "Packetized Elementary Stream" (PES) with its relatively long packet structures is not, however, suitable for transmission and especially not for broadcasting a number of programs in one multiplexed data signal.

In MPEG-2, on the other hand, the objective has been to assemble up to 6, 10 or even 20 independent TV or radio programs to form one common multiplexed MPEG-2 data signal. This data signal is then transmitted via satellite, cable or terrestrial transmission links. To this end, the long PES packets are additionally divided into smaller packets of constant-length.

From the PES packets, 184-byte-long pieces are taken and to these another 4-byte-long header is added (Fig. 3.6.), making up 188-byte-long packets called "transport stream packets" which are then multiplexed.

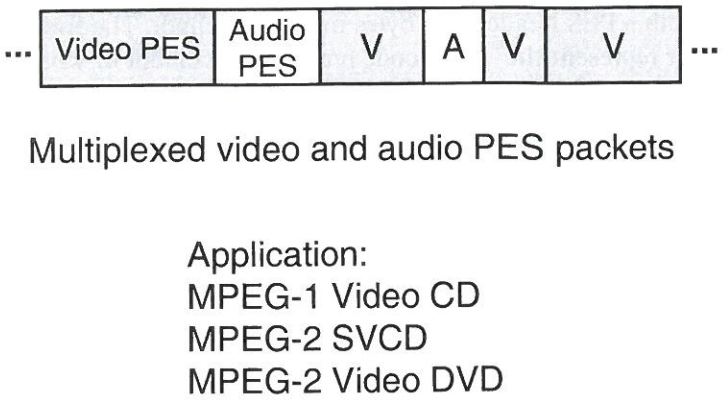

Fig. 3.5. Multiplexed PES packets

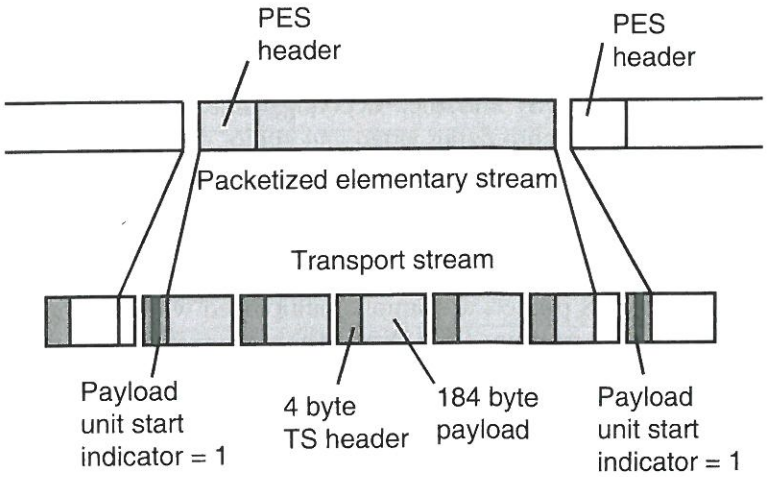

Fig. 3.6. Forming MPEG-2 transport stream packets

To do this, first the transport stream packets of one program are multiplexed together. A program can consist of one or more video and audio signals and an extreme example of this is a Formula 1 transmission with a

number of camera angles (track, spectators, car, helicopter) and presented in different languages. All the multiplexed data streams of all the programs are then multiplexed again and combined to form a complete data stream which is called an "MPEG-2 transport stream" (TS for short).

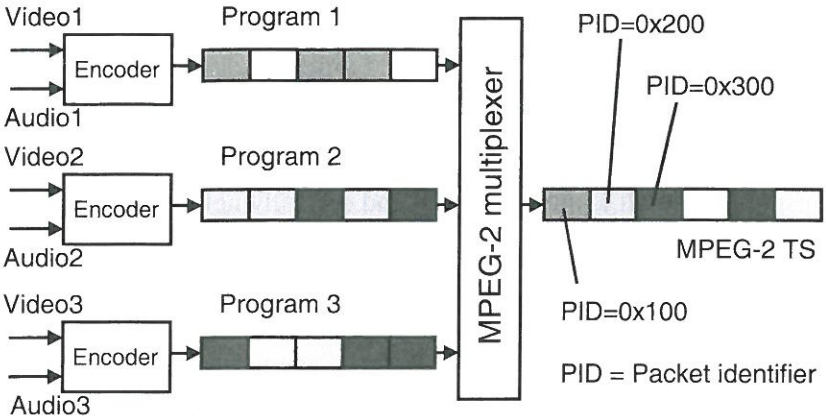

Fig. 3.7. Multiplexed MPEG-2 transport stream packets

An MPEG-2 transport stream contains the 188-byte-long transport stream packets of all programs with all their video, audio and data signals. Depending on the data rates, packets of one or the other elementary streams will occur more or less frequently in the MPEG-2 transport stream. For each program there is one MPEG encoder which encodes all elementary streams, generates a PES structure and then packetizes these PES packets into transport stream packets. The data rate for each program is usually approx. 2 - 7 Mbit/s but the aggregate data rate for video, audio and data can be constant or vary in accordance with the program content at the time. This is then called "statistical multiplex". The transport streams of all the programs are then combined in a multiplexed MPEG-2 data stream to form one overall transport stream (Fig. 3.7.) which can then have a data rate of up to about 40 Mbit/s. There are often up to 6, 8 or 10 or even 20 programs in one transport stream. The data rates can vary during the transmission but the overall data rate has to remain constant. A program can contain video and audio, only audio (audio broadcast) or only data, and the structure is thus flexible and can also change during the transmission. To be able to determine the current structure of the transport

stream during the decoding, the transport stream also carries lists describing the structure, so-called "tables".

3.2 The MPEG-2 Transport Stream Packet

The MPEG-2 transport stream consists of packets having a constant length (Fig. 3.8.). This length is always 188 bytes, with 4 bytes of header and 184 bytes of payload. The payload contains the video, audio or general data. The header contains numerous items of importance to the transmission of the packets. The first header byte is the "sync byte". It always has a value of 47_{hex} (0x47 in C/C++ syntax) and is spaced a constant 188 bytes apart in the transport stream. It is quite possible, and certainly not illegal, for there to be a byte having the value 0x47 somewhere else in the packet.

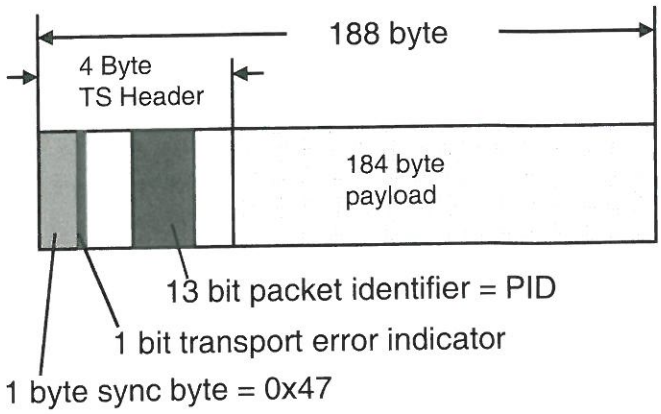

Fig. 3.8. MPEG-2 transport stream packet

The sync byte is used for synchronizing the packet to the transport stream and it is its value plus the constant spacing which is being used for synchronization. According to MPEG, synchronization at the decoder occurs after five transport stream packets have been received. Another important component of the transport stream is the 13 bit-long "packet identifier" or PID for short. The PID describes the current content of the payload part of this packet. The hexadecimal 13 bit number in combination with tables also included in the transport stream show which elementary stream or content this is.

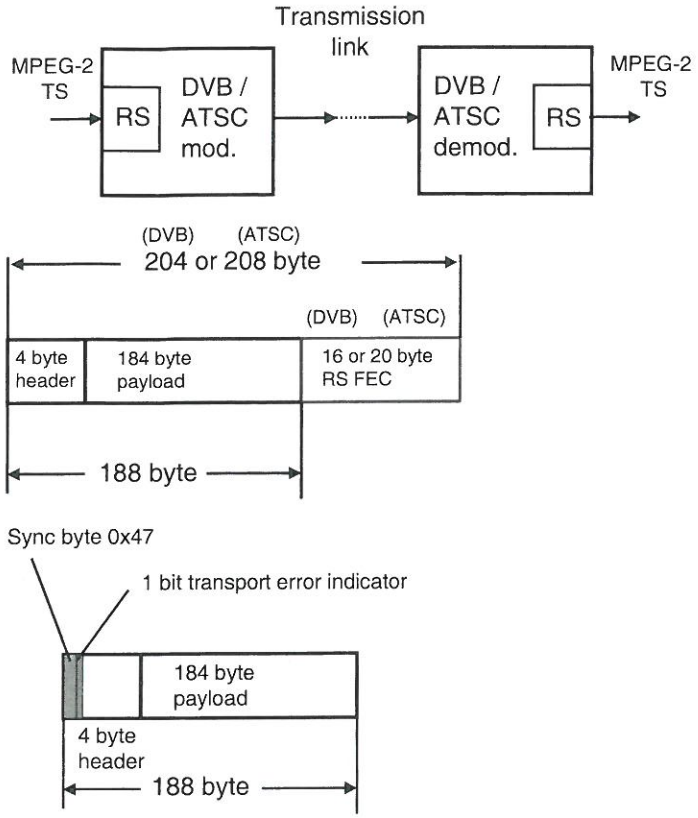

Fig. 3.9. Reed-Solomon FEC

The bit immediately following the sync bit is the "transport error indicator" bit (Fig. 3.8.). With this bit, transport stream packets are flagged as errored after their transmission. It is set by demodulators at the end of the transmission link if e.g. too many errors have occurred and there had been no further possibility to correct these by means of error correction mechanisms used during the transmission. In DVB (Digital Video Broadcasting), e.g., the primary error protection used is always the Reed Solomon error correction code (Fig. 3.9.). In one of the first stages of the (DVB-S, DVB-C or DVB-T) modulator, 16 bytes of error protection are added to the initially 188 bytes of the packet. These 16 bytes of error protection are a special checksum which can be used for repairing up to 8 errors per packet at the receiving end. If, however, there are more than 8 errors in a packet, there is no further possibility for correcting the errors, the error protection has failed and the packet is flagged as errored by the transport error indica-

tor. This packet must now no longer be decoded by the MPEG decoder which, instead, has to mask the error which, in most cases, can be seen as a type of "blocking" in the picture.

It may be necessary occasionally to transmit more than 4 bytes of header per transport stream packet. The header is extended into the payload field in this case. The payload part becomes correspondingly shorter but the total packet length remains a constant 188 bytes. This extended header is called an "adaptation field" (Fig. 3.10.). The other contents of the header and of the adaptation field will be discussed later. "Adaptation control bits" in the 4 byte-long header show if there is an adaptation field or not.

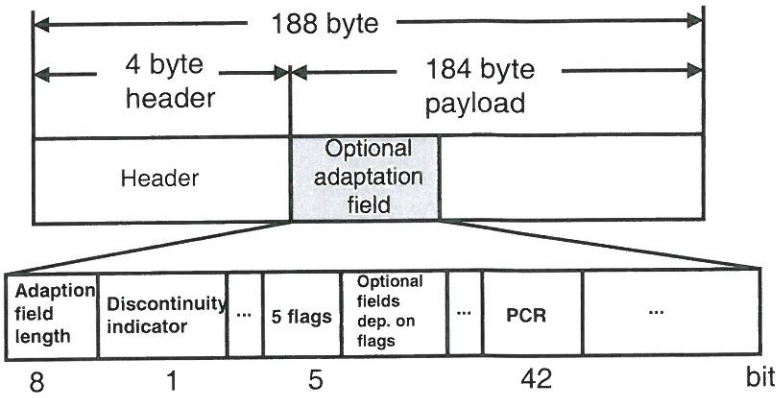

Fig. 3.10. Adaptation field

The structure and especially the length of a transport stream packet are very similar to a type of data transmission known from telephony and LAN technology, namely the "asynchronous transfer mode" or ATM in short. Today, ATM is used both in long-haul networks for telephony and Internet calls and for interconnecting computers in a LAN network in buildings. ATM also has a packet structure. The length of one ATM cell is 53 bytes containing 5 bytes of header and 48 bytes of payload. Right at the beginning of MPEG-2 it was considered to transmit MPEG-2 data signals via ATM links. Hence the length of an MPEG-2 transport stream packet. Taking into consideration one special byte in the payload part of an ATM cell, this leaves 47 bytes of payload data. It is then possible to transmit 188 bytes of useful information by means of 4 ATM cells, corresponding exactly to the length of one MPEG-2 transport stream packet. And indeed, MPEG-2 transmissions over ATM links are nowadays a fact of life. Ex-

amples of this are found, e.g. in Austria where all national studios of the Austrian broadcasting institution ORF (Österreichischer Rundfunk) are linked via an ATM network (called LNET). In Germany, too, MPEG streams are exchanged over ATM links.

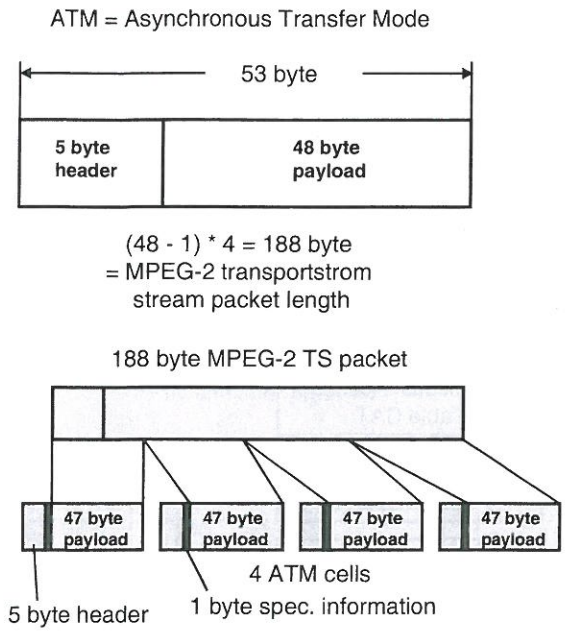

Fig. 3.11. ATM cell

When MPEG signals are transmitted via ATM links, various transmission modes called ATM Adaptation Layers can be applied at the ATM level. The mode shown in Fig. 3.11. corresponds to ATM Adaptation Layer 1 without FEC (i.e. AAL1 without FEC (forward error correction)). ATM Adaptation Layer 1 with FEC (AAL1 with FEC) or ATM Adaptation Layer 5 (AAL5) are also possible. The most suitable layer appears to be AAL1 with FEC since the contents are error-protected during the ATM transmission in this case.

The fact that the MPEG-2 transport stream is a completely asynchronous data signal is of particularly decisive significance. There is no way of knowing what information will follow in the next time slot (= transport stream packet). This can only be determined by means of the PID of the transport stream packet. The actual payload data rates in the payload can fluctuate; there may be stuffing to supplement the missing 184 bytes. This asynchronism has great advantages with regard to future flexibility, mak-

ing it possible to implement any new method without much adaptation. But there are also disadvantages: the receiver must always be monitoring and thus uses more power; unequal error protection as, e.g., in DAB (digital audio broadcasting) cannot be applied and different contents can not be protected to a greater or lesser degree as required.

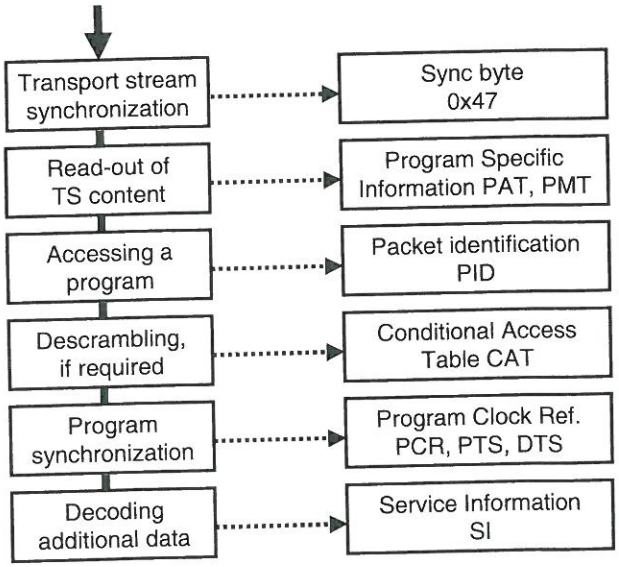

Fig. 3.12. Information for the receiver

3.3 Information for the Receiver

In the following paragraphs, the components of the transport stream which are necessary for the receiver will be considered. Necessary components means in this case: What does the receiver, i.e. the MPEG decoder, need for extracting from the large number of transport stream packets with the most varied contents exactly those which are needed for decoding the desired program? In addition, the decoder must be able to synchronize correctly to this program. The MPEG-2 transport stream is a completely asynchronous signal and its contents occur in a purely random fashion or on demand in the individual time slots. There is no absolute rule which can be used for determining what information will be contained in the next transport stream packet. The decoder and every element on the transmission link must lock to the packet structure. The PID (packet identifier) can be

used for finding out what is actually being transmitted in the respective element. On the one hand, this asynchronism has advantages because of the total flexibility provided but there are also disadvantages with regard to power saving. Every single transport stream packet must first be analysed in the receiver.

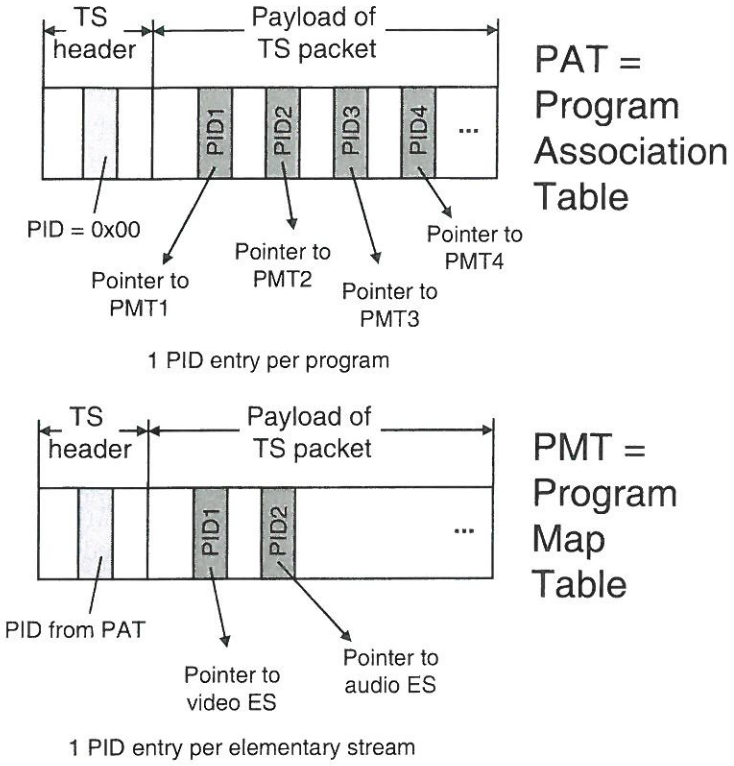

Fig. 3.13. PAT and PMT

3.3.1 Synchronizing to the Transport Stream

When the MPEG-2 decoder input is connected to an MPEG-2 transport stream, it must first lock to the transport stream, i.e. to the packet structure. The decoder, therefore, looks for the sync bytes in the transport stream. These always have the value of 0x47 and always appear at the beginning of a transport stream packet. They are thus present at constant intervals of 188 bytes. These two factors together, the constant value of 0x47 and the constant spacing of 188 bytes, are used for the synchronization. If a byte

having a value of 0x47 appears, the decoder will examine the positions of n times 188 bytes before and after this byte in the transport stream for the presence of another sync byte. If there is, then this is a sync byte. If not, then this is simply some code word which has accidentally assumed this value. It is inevitable that the code word of 0x47 will also occur in the continuous transport stream. Synchronization will occur after 5 transport stream packets and the decoder will lose lock after a loss of 3 packets (as quoted in the MPEG-2 Standard).

3.3.2 Reading out the Current Program Structure

The number and the structure of the programs transmitted in the transport stream is flexible and open. The transport stream can contain one program with one video and audio elementary stream, or there can be 20 programs or more, some with only audio, some with video and audio and some with video and a number of audio signals which are being broadcast. It is, therefore, necessary to include certain lists in the transport stream which describe the instantaneous structure of the transport stream.

These lists provide the so-called "program specific information", or PSI in short (Fig. 3.13.). They are tables which are occasionally transmitted in the payload part. The first table is the "Program Association Table" (PAT). This table occurs precisely once per transport stream but is repeated every 0.5 sec.. This table shows how many programs there are in this transport stream. Transport stream packets containing this table have the value zero as packet identifier (PID) and can thus be easily identified. In the payload part of the program association table, a list of special PIDs is transmitted. There is exactly one PID per program in the program association table (Fig. 3.13.).

These PIDs are pointers, as it were, to other information describing each individual program in more detail. They point to other tables, the so-called "Program Map Tables" (PMT). The program map tables, in turn, are special transport stream packets with a special payload part and special PID. The PIDs of the PMTs are transmitted in the PAT. If it is intended to receive, e.g. program No.3, PID no. 3 is selected in the list of all PIDs in the payload part in the program association table (PAT). If this is, e.g. 0x1FF3, the decoder looks for transport stream packets having PID = 0x1FF3 in their header. These packets are then the program map table for program no. 3 in the transport stream. The program map table, in turn, contains PIDs which are the PIDs for all elementary streams contained in this program (video, audio, data).

Since there can be a number of video and audio streams - as for instance in a Formula-1 broadcast in various languages - the viewer must select the elementary streams to be decoded. Ultimately he will select exactly 2 PIDs - one for the video stream and one for the audio stream, resulting e.g. in the two hexadecimal numbers PID1 = 0x100 and PID2 = 0x110. PID1 is then e.g. the PID for the video stream to be decoded and PID2 is the PID for the audio stream to be decoded. From now on, the MPEG-2 decoder will only be interested in these transport stream packets, collect them, i.e. demultiplex them and assemble them again to form the PES packets. It is precisely these PES packets which are supplied to the video and audio decoder in order to generate another video-and-audio signal.

The composition of the transport stream can change during the transmission, e.g. local programs can only be transmitted within certain windows. A set-top box decoder, e.g. for DVB-S signals must, therefore, continuously monitor in the background the instantaneous structure of the transport stream, read out the PAT and PMTs and adapt to new situations. The header of a table contains a so-called version management for this purpose which signals to the receiver whether something has changed in the structure. It is regrettable that this does still not hold true for all DVB receivers. A receiver often recognizes a change in the program structure only after a new program search has been started. In many regions in Germany, so-called "regional window programs" are inserted into the public service broadcast programs at certain times of the day. These are implemented by a so-called "dynamic PMT", i.e. the contents of the PMT are altered and signal changes in the PIDs of the elementary streams.

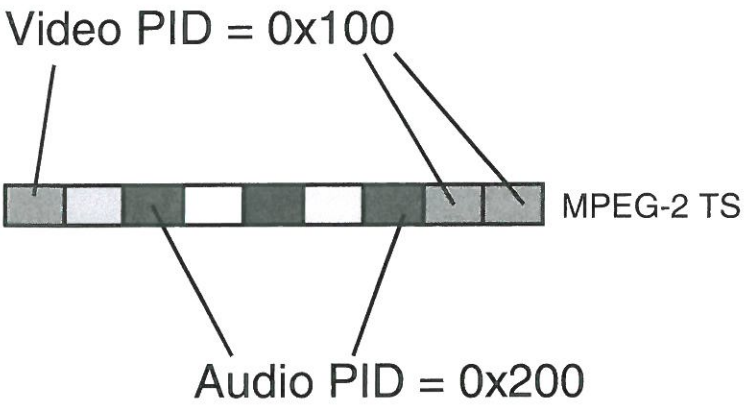

Fig. 3.14. Accessing a program via video and audio PIDs

3.3.3 Accessing a Program

After the PIDs of all elementary streams contained in the transport stream have become known from the information contained in the PAT and the PMTs and the user has committed himself to a program, a video and audio stream, precisely two PIDs are now defined (Fig. 3.14.): the PID for the video signal to be decoded and the PID for the audio signal to be decoded. The MPEG-2 decoder, on instruction by the user of the set-top box, will now only be interested in these packets. Assuming then that the video PID is 0x100 and the audio PID is 0x110: in the following demultiplexing process all TS packets with 0x100 will be assembled into video PES packets and supplied to the video decoder. The same applies to the 0x110 audio packets which are collected together and reassembled to form PES packets which are supplied to the audio decoder. If the elementary streams are not scrambled, they can now also be decoded directly.

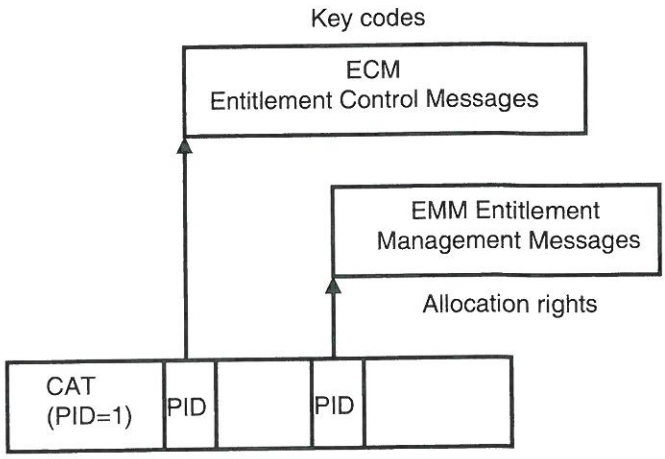

Fig. 3.15. The Conditional Access Table

3.3.4 Accessing Scrambled Programs

However, the elementary streams are transmitted scrambled. All or some of the elementary streams are transmitted protected by an electronic code in the case of pay TV or for licencing reasons involving local restrictions on reception. The elementary streams are scrambled (Fig. 3.17.) by various methods (Viaccess, Betacrypt, Irdeto, Conax, Nagravision etc.) and cannot

be received without additional hardware and authorization. This additional hardware must be supplied with the appropriate descrambling and authorization data from the transport stream. For this purpose, a special table is transmitted in the transport stream, the "conditional access table" (CAT) (Fig. 3.15.).

The CAT supplies the PIDs for other data packets in the transport stream in which this descrambling information is transmitted. This additional descrambling information is called ECM (entitlement control message) and EMM (entitlement management message). The ECMs are used for transmitting the scrambling codes and the EMMs are used for user administration. The important factor is that only the elementary streams themselves may be scrambled, and no transport stream headers (or tables, either). Neither is it permitted to scramble the transport stream header or the adaptation field.

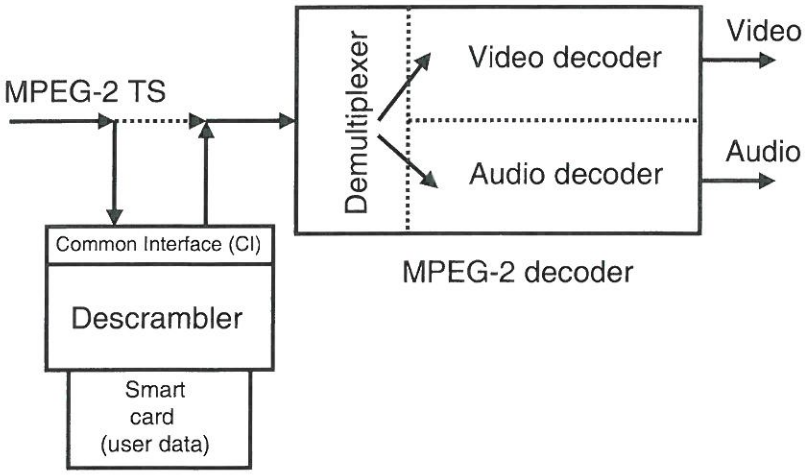

Fig. 3.16. Descrambling in the DVB receiver

The descrambling itself is done outside the MPEG decoder in additional hardware related to the descrambling method, which can be plugged into a so-called "common interface" (CI) in the set-top box. The transport stream is looped through this hardware before being processed further in the MPEG decoder. The information from the ECMs and EMMs and the user's personal code from the smart card then enable the streams to be descrambled.

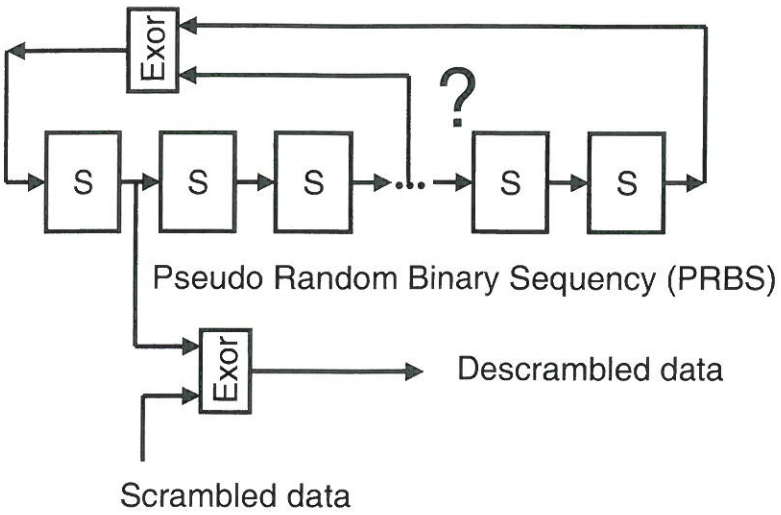

Fig. 3.17. Scrambling and descrambling by PRBS generator in the CA system and the receiver

3.3.5 Program Synchronisation (PCR, DTS, PTS)

Once the PIDs for video and audio have been determined and any scrambled programs have been descrambled and the streams have been demultiplexed, video and audio PES packets are generated again. These are then supplied to the video and audio decoder. The actual decoding, however, requires a few more synchronization steps. The first step consists of linking the receiver clock to the transmitter clock. As indicated initially, the luminance signal is sampled at 13.5 MHz and the two chrominance signals are sampled at 6.75 MHz. 27 MHz is a multiple of these sampling frequencies, which is why this frequency is used as reference, or basic, frequency for all processing steps in the MPEG encoding at the transmitter end. A 27 MHz oscillator in the MPEG encoder feeds the "system time clock" (STC). The STC is essentially a 42 bit counter which is clocked by this same 27 MHz clock and starts again at zero after an overflow. The LSB positions do not go up to FFF but only to 300. Approximately every 26.5 hours the counter restarts at zero. At the receiving end, another system time clock (STC) must be provided, i.e. another 27 MHz oscillator connected to a 42 bit counter is needed. However, the frequency of this 27 MHz oscillator must be in complete synchronism with the transmitting end, and the 42 bit counter must also count in complete synchronism.

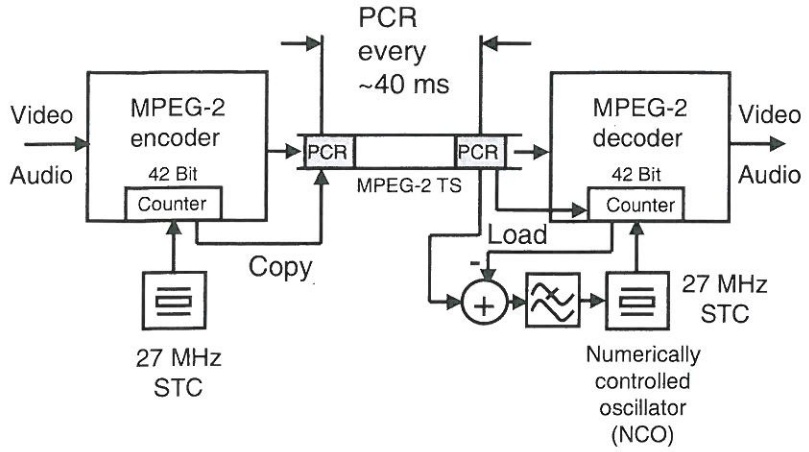

Fig. 3.18. Program Clock Reference

To accomplish this, reference information is transmitted in the MPEG data stream (Fig. 3.18.). In MPEG-2, these are the "Program Clock Reference" (PCR) values which are nothing else than an up-to-date copy of the STC counter fed into the transport stream at a certain time. The data stream thus carries an accurate internal "clock time". All coding and decoding processes are controlled by this clock time. To do this, the receiver, i.e. the MPEG decoder, must read out the "clock time", namely the PCR values, and compare them with its own internal system clock, that is to say its own 42 bit counter.

If the received PCR values are locked to the system clock in the decoder, the 27 MHz clock at the receiving end matches the transmitting end. If there is a deviation, a controlled variable for a PLL can be generated from the magnitude of the deviation, i.e. the oscillator at the receiving end can be corrected. In parallel, the 42 bit count is always reset to the received PCR value, a basic requirement for system initialization and in the event of a program change.

The PCR values must be present in sufficient numbers, that is to say with a maximum spacing, and relatively accurately, that is to say free of jitter. According to MPEG, the maximum spacing per program is 40 ms between individual PCR values. The PCR jitter must be less than ± 500 ns. PCR problems manifest themselves in the first instance in that instead of a color picture, a black/white picture is displayed. PCR jitter problems can occur during the remultiplexing of a transport stream, among other things. The reason is that e.g., the order of the transport stream packets is changed

without the PCR information continued in them also being changed. There is frequently a PCR jitter of up to ± 30 µs even though only ± 500 ns is allowed. This can be handled by many set-top boxes but not by all. The PCR information is transmitted in the adaptation field of a transport stream packet belonging to the corresponding program. The precise information about the type of TS packets in which this is done can be found in the corresponding program map table (PMT). The PMT contains the so-called PCR_PID which, however, corresponds to the video PID of the respective program in most cases. After program clock synchronization has been achieved, the video and audio coding steps are then executed in lock with the system time clock (STC).

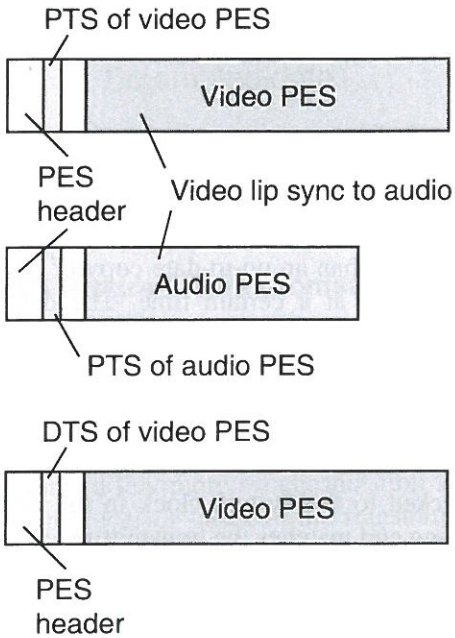

Fig. 3.19. PTS and DTS

However, another problem now presents itself. Video and audio must be decoded and reproduced with lip synchronization. In order to be able to achieve "lip sync", i.e. synchronization between video and audio, additional timing information is keyed into the headers of the video and audio PESs. This timing information is derived from the system time clock (STC, 42 bits). Using the 33 most significant bits (MSB) of the STC, these

values are entered into the video and audio PES headers at maximum intervals of 700 ms and are called "presentation time stamps" (PTS)

As will be seen later in the section on video coding, the order in which the compressed picture information is transmitted will differ from the order in which it is recorded. The frame sequence is now scrambled in conformity with certain coding rules, a necessary measure in order to save memory space in the decoder. To recover the original sequence, additional time stamps must be keyed into the video stream. These are called "decoding time stamps" (DTS) and are also transmitted in the PES header.

An MPEG-2 decoder in a set-top box is then able to decode the video and audio streams of a program, resulting again in video and audio signals, either in analog form or in digital form.

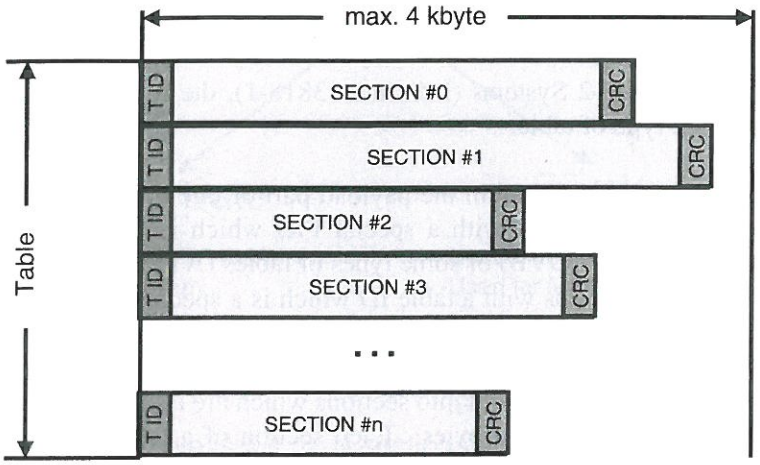

Fig. 3.20. Sections and tables

3.3.6 Additional Information in the Transport Stream (SI/PSI/PSIP)

According to MPEG, the information transmitted in the transport stream is fairly hardware-oriented, only relating to the absolute minimum requirements, as it were. However, this does not make the operation of a set-top box particularly user-friendly. For example, it makes sense, and is necessary, to transmit program names for identification purposes. It is also desirable to simplify the search for adjacent physical transmission channels. It is also necessary to transmit electronic program guides (EPG) and time and date information. In this respect, both the European DVB Project

group and the US ATSC Project group have defined additional information for the transmission of digital video and audio programs which is intended to simplify the operation of set-top boxes and make it much more user-friendly.

3.3.7 Non-Private and Private Sections and Tables

To cope with any extensions, the MPEG Group has incorporated an "open door" in the MPEG-2 Standard. In addition to the "program specific information" (PSI), the "program map table" (PMT) and the "conditional access table" (CAT), it created the possibility to incorporate so-called "private sections and private tables" (Fig. 3.20.) in the transport stream. The group has defined mechanisms which specify what a section or table has to look like, what its structure has to be and by what rules it is to be linked into the transport stream.

According to MPEG-2 Systems (ISO/IEC 13818-1), the following was specified for each type of table:

- A table is transmitted in the payload part of one or more transport stream packets with a special PID which is reserved for only this table (DVB) or some types of tables (ATSC).
- Each table begins with a table ID which is a special byte which identifies only this table alone. The table ID is the first payload byte of a table.
- Each table is subdivided into sections which are allowed to have a maximum size of 4 bytes. Each section of a table is terminated with a 32-bit-long CRC checksum over the entire section.

The "Program Specific Information" (PSI) has exactly the same structure. The PAT has a PID of zero and begins with a table ID of zero. The PMT has the PIDs defined in the PAT as PID and has a table ID of 2. The CAT has a PID and a table ID of one in each case. The PSI can be composed of one or more transport stream packets for PAT, PMT and CAT depending on content.

Apart from the PSI tables PAT, PMT and CAT mentioned above, another table, the so-called "network information table" (NIT) was provided in principle but not standardized in detail. It was actually implemented as part of the DVB (Digital Video Broadcasting) project.

All tables are implemented through the mechanism of sections. There are non-private and private sections (Fig. 3.21.). Non-private sections are defined in the original MPEG-2 Systems Standard. All others are corre-

spondingly private. The non-private sections include the PSI tables and the private ones include the SI sections of DVB and the MPEG-2 DSM-CC (Digital Storage Media Command and Control) sections which are used for data broadcasting. The header of a table contains administration of the version number of a table and information about the number of sections of which a table is made up. A receiver must first of all scan through the header of these sections before it can evaluate the rest of the sections and tables. Naturally, all sections must be broken down from an original maximum length of 4 kbytes to maximally 148 bytes payload length of an MPEG-2 transport stream packet before they are transmitted.

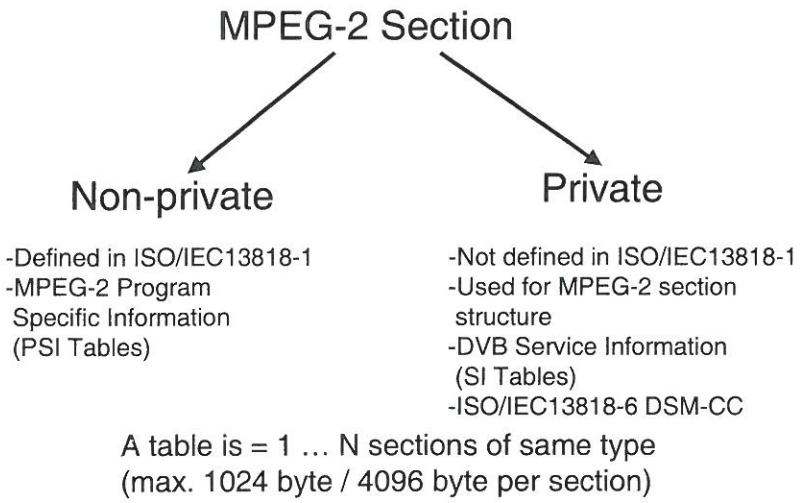

Fig. 3.21. Sections and tables according to MPEG-2

In the case of PSI/SI, the limit of the section length has been lowered to 1 kbyte in almost all tables, the only exception being the EIT (Event Information Table) which is used for transmitting the electronic program guide (EPG). The sections of the EIT can assume the maximum length of 4 kbytes because they carry a large amount of information as in the case of a week-long EPG.

If a section begins in a transport stream packet (Fig. 3.22.), the payload unit start indicator of its header is set to "1". The TS header is then followed immediately by the pointer which points (in number of bytes) to the actual beginning of the section. In most cases (and always in the case of

PSI/SI), this pointer is set to zero which means that the section begins immediately after the pointer.

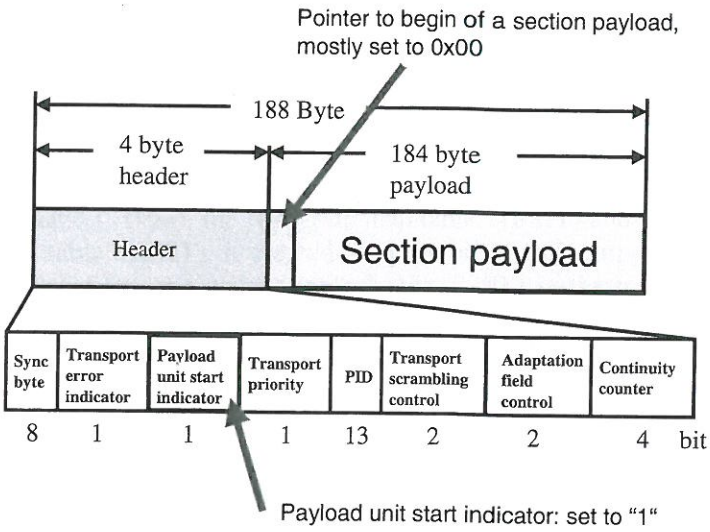

Fig. 3.22. Beginning of a section in an MPEG-2 transport stream packet

```
table_id                                  8 Bit
section_syntax_indicator                  1
private_indicator                         1
reserved                                  2
section_length                            12
if (section_syntax_indicator == 0)
  table_body1() /* short table */
else
  table_body2() /* long table */
if (section_syntax_indicator == 1)
  CRC                                     32 Bit
```

Fig. 3.23. Structure of a section

If the pointer has a value which differs from zero, remainders of the preceding section can still be found in this transport stream packet. This is utilized for saving TS packets, an example being MPE (multi-protocol encapsulation) over DSM-CC sections in the case of IP over MPEG-2 (see DVB-H).

The structure of sections always follow the same plan (Fig. 3.23., Fig. 3.24.). A section begins with the table_ID, a byte which signals the type of table. The section_syntax_indicator bit indicates whether this is a short type of section (bit = 0) or a long one (bit = 1). If it is a long section, this is then followed by an extended header which contains, among other things, the version management of the section and its length and the number of the last section. The version number indicates if the content of the section has changed (e.g. in case of a dynamic PMT or if the program structure has changed). A long section is always concluded with a 32-bit-long CRC checksum over the entire section.

```
table_body1()
{
 for (i=0;i<N;i++)
  data_byte                    8 Bit
}
```

```
table_body2()
{
 table_id_extension            16 Bit
 reserved                      2
 version_number                5
 current_next_indicator        1
 section_number                8
 last_section_number           8

 for (i=0;i<N;i++)
  data_byte                    8 Bit
}
```

Fig. 3.24. Structure of the section payload

The detailed structure of a PAT and PMT can now also be understood more easily. A PAT (Fig. 3.25, Fig. 3.26) begins with the table_ID = 0x00. Its type is that of a non-private long table, i.e. the version management follows in the header. Since the information about the program structure to be transmitted is very short, a single section is virtually always sufficient (last_section_no = 0) and it also fits inside a transport packet. In the program loop, the program number and the associated program map ID are listed for each program. Program No. Zero is a special exception, it informs about the PID of the later NIT (program information table). The PAT is then concluded with the CRC checksum. There is one PAT per transport stream but it is repeated every 0.5 sec. In the header of the table, an unambiguous number, the transport stream_ID, is allocated to the transport stream via which it can be addressed in a network (e.g. a satellite network with many transport streams). The PAT does not contain any text information.

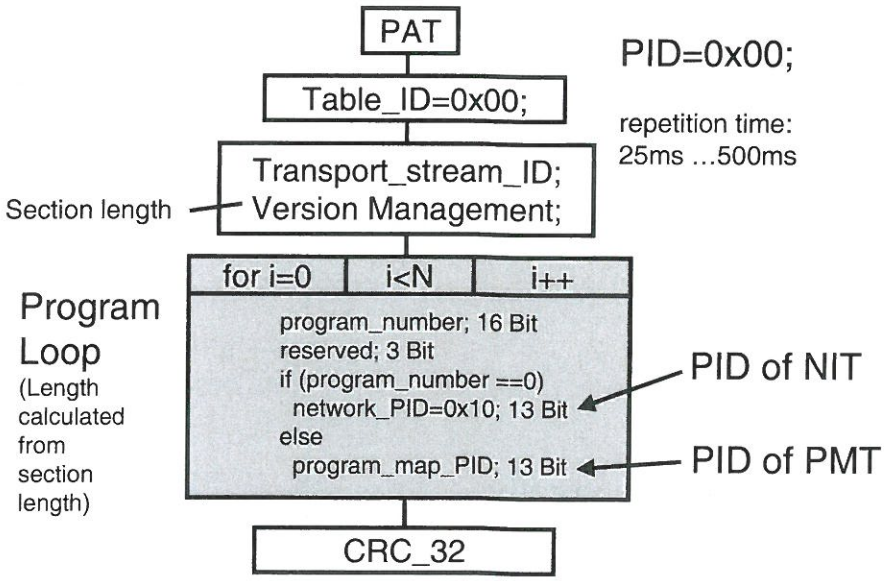

Fig. 3.25. Detailed structure of the PAT

The program map table (PMT) begins with the table_ID = 0x02. The PID is signalled via the PAT and is in the range of 0x20 ... 0x1FFE. The PMT is also a so-called non-private tale with version management and concluding CRC checksum. The header of the PMT carries the program_no, already familiar from the PAT. The program_no in PAT and PMT must match, i.e. be equal.

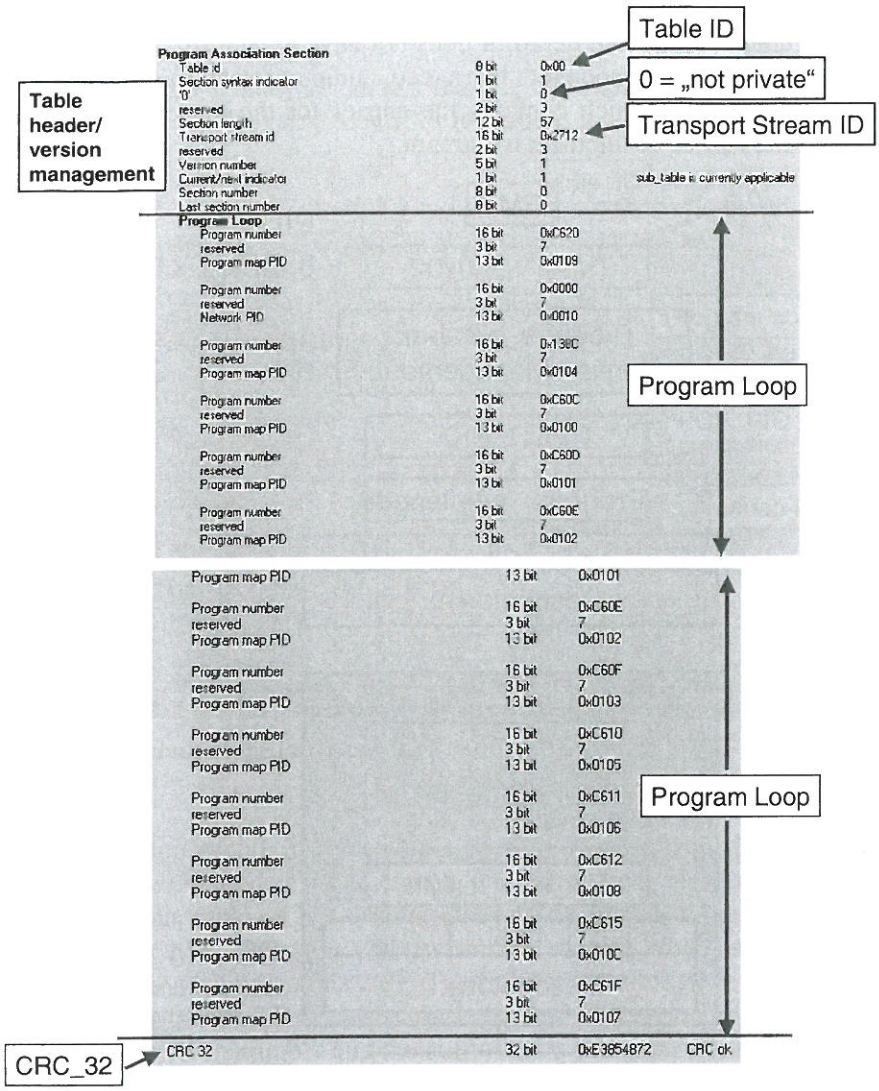

Program Association Section			
Table id	8 bit	0x00	
Section syntax indicator	1 bit	1	
'0'	1 bit	0	
reserved	2 bit	3	
Section length	12 bit	57	
Transport stream id	16 bit	0x2712	
reserved	2 bit	3	
Version number	5 bit	1	
Current/next indicator	1 bit	1	sub_table is currently applicable
Section number	8 bit	0	
Last section number	8 bit	0	
Program Loop			
Program number	16 bit	0xC620	
reserved	3 bit	7	
Program map PID	13 bit	0x0109	
Program number	16 bit	0x0000	
reserved	3 bit	7	
Network PID	13 bit	0x0010	
Program number	16 bit	0x138C	
reserved	3 bit	7	
Program map PID	13 bit	0x0104	
Program number	16 bit	0xC60C	
reserved	3 bit	7	
Program map PID	13 bit	0x0100	
Program number	16 bit	0xC60D	
reserved	3 bit	7	
Program map PID	13 bit	0x0101	
Program number	16 bit	0xC60E	
reserved	3 bit	7	
Program map PID	13 bit	0x0102	
Program map PID	13 bit	0x0101	
Program number	16 bit	0xC60E	
reserved	3 bit	7	
Program map PID	13 bit	0x0102	
Program number	16 bit	0xC60F	
reserved	3 bit	7	
Program map PID	13 bit	0x0103	
Program number	16 bit	0xC610	
reserved	3 bit	7	
Program map PID	13 bit	0x0105	
Program number	16 bit	0xC611	
reserved	3 bit	7	
Program map PID	13 bit	0x0106	
Program number	16 bit	0xC612	
reserved	3 bit	7	
Program map PID	13 bit	0x0108	
Program number	16 bit	0xC615	
reserved	3 bit	7	
Program map PID	13 bit	0x010C	
Program number	16 bit	0xC61F	
reserved	3 bit	7	
Program map PID	13 bit	0x0107	
CRC 32	32 bit	0xE3654872	CRC ok

Fig. 3.26. Details of the Program Association Table (practical example)

The header of the PMT is followed by the program_info_loop into which various descriptors can be inserted as required which describe program components in more detail. It does not have to be utilized, however. The actual program components like video, audio or teletext are identified via the stream loop which contains the entries for the respective stream type and the PID of the elementary stream.

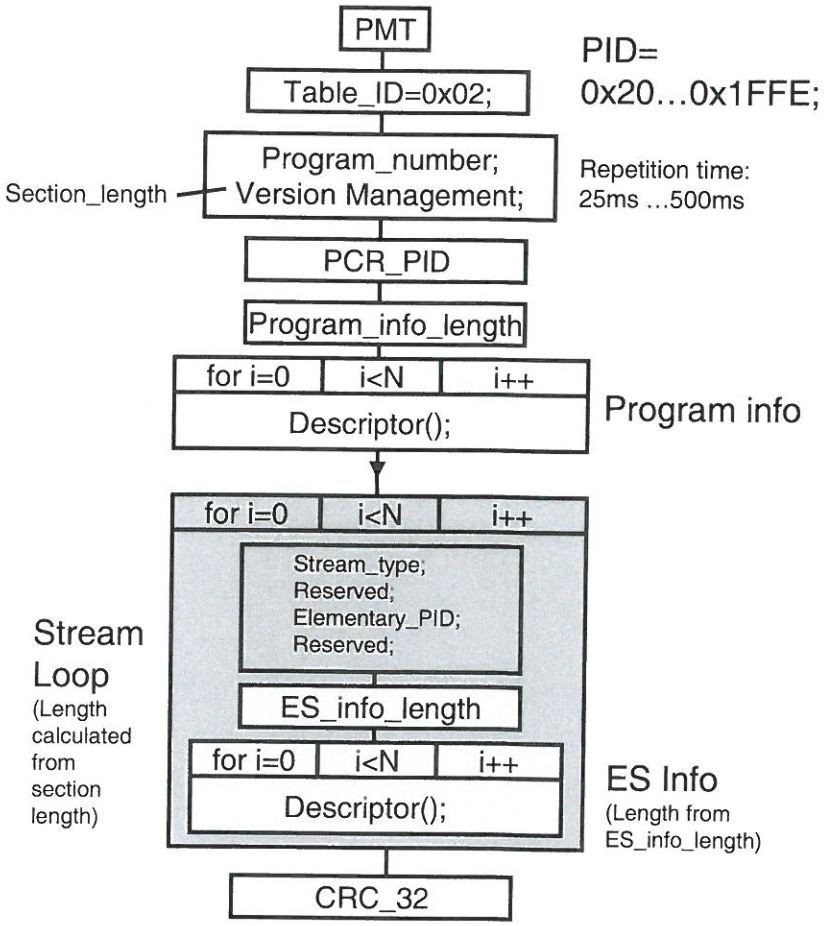

Fig. 3.27. Detailed structure of the Program Map Table

It is possible to include a number of descriptors for each program component in the ES_info_loop. There is one PMT for each program and it is sent out every 0.5 sec. There is no text information in the PMT, either.

Fig. 3.28. shows an actual example of the structure of a Program Map Table, which is quite short in this case. It will be discussed in more detail as representative of many other tables following. The example, recorded with an MPEG-2 analyzer, shows that the PMT begins with the table ID 0x02, a byte which clearly identifies it as such.

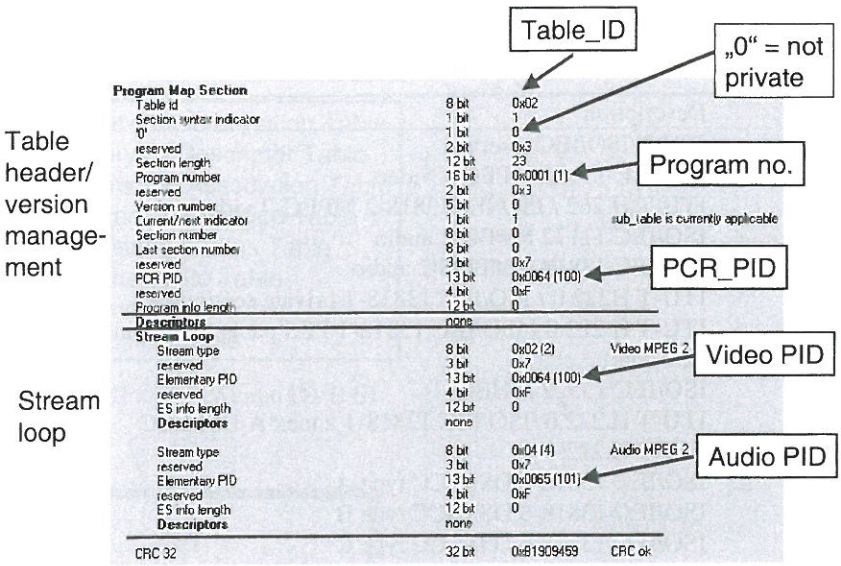

Program Map Section			
Table id	8 bit	0x02	
Section syntax indicator	1 bit	1	
'0'	1 bit	0	
reserved	2 bit	0x3	
Section length	12 bit	23	
Program number	16 bit	0x0001 (1)	
reserved	2 bit	0x3	
Version number	5 bit	0	
Current/next indicator	1 bit	1	sub_table is currently applicable
Section number	8 bit	0	
Last section number	8 bit	0	
reserved	3 bit	0x7	
PCR PID	13 bit	0x0064 (100)	
reserved	4 bit	0xF	
Program info length	12 bit	0	
Descriptors	none		
Stream Loop			
Stream type	8 bit	0x02 (2)	Video MPEG 2
reserved	3 bit	0x7	
Elementary PID	13 bit	0x0064 (100)	
reserved	4 bit	0xF	
ES info length	12 bit	0	
Descriptors	none		
Stream type	8 bit	0x04 (4)	Audio MPEG 2
reserved	3 bit	0x7	
Elementary PID	13 bit	0x0065 (101)	
reserved	4 bit	0xF	
ES info length	12 bit	0	
Descriptors	none		
CRC 32	32 bit	0xB1909459	CRC ok

Fig. 3.28. Details of the Program Map Table (practical example)

The section syntax indicator bit is set to "1" and tells one that this is a long table with version management. The subsequent bit is set to "0" and identifies this table as a so/called non/private MPEG table. The section length says how long this current section of this table happens to be, namely 23 bytes long in this case. The field of the table_ID extension contains the program number; there must also be a corresponding entry in the PAT. The version number and the current/next indicator signal a change in the program map table. This information must be continuously checked by a receiver which must respond to a change in the program structure (dynamic PMT) if necessary. The section number tells what section this happens to be and the Last Section No informs about the number of the last section of a table. It is set to zero in this case, i.e. the table consists of only one section.

The PCR_PID (program check reference – packet identifier) provides the PID on which the PCR value is broadcast. This is the video PID in most cases.

There should now be a program_info loop but there is none in this example, a fact which is signalled by the length indicator "program_info_length = 0.

However, the stream loop provides information about the video and audio PID. The stream type (see Table 3.1.) shows the type of payload, namely MPEG-2 video and MPEG-2 audio in this case.

Table 3.1. Stream types of the Program Map Table

Value	Description
0x00	ITU-T/ISO/IEC reserved
0x01	ISO/IEC 11172 MPEG-1 video
0x02	ITU-T H.262 / ISO/IEC13818-2 MPEG-2 video
0x03	ISO/IEC 11172 MPEG-1 audio
0x04	ISO/IEC 13818-3 MPEG-2 audio
0x05	ITU-T H222.0 / ISO/IEC 13818-1 private sections
0x06	ITU-T H.222.0 / ISO/IEC 13818-1 PES packets containing private data
0x07	ISO/IEC 13522 MHEG
0x08	ITU-T H.222.0 /ISO/IEC 13818-1 annex A DSM-CC
0x09	ITU-T H.222.1
0x0A	ISO/IEC 13818-6 DSM-CC type A
0x0B	ISO/IEC 13818-6 DSM-CC type B
0x0C	ISO/IEC 13818-6 DSM-CC type C
0x0D	ISO/IEC 13818-6 DSM-CC type D
0x0E	ISO/IEC 13818-1 auxiliary
0x0F-0x7F	ITU-T H.222.0 / ISO/IEC 13818-1 reserved
0x80-0xFF	User private

3.3.8 The Service Information according to DVB (SI)

Taking advantage of the "private section" and "private table" features, the European DVB Group has introduced numerous additional tables intended to simplify the operation of the set-top boxes or quite generally of the DVB receivers. Called "service information" (SI), they are defined in ETSI Standard ETS300468.

They are the following tables (Fig. 3.29.): the "network information table" (NIT), the "service descriptor table" (SDT), the "bouquet association table" (BAT), the "event information table" (EIT), the "running status table" (RST), the "time&date table" (TDT), the "time offset table" (TOT)

and, finally, the "stuffing table" (ST). These eight tables will now be described in more detail.

PAT	Program Association Table	MPEG-2 PSI Program Specific Information
PMT's	Program Map Table	
CAT	Conditional Access Table	
(NIT)	Network Information Table	
Private Sections / Tables		

NIT	Network Information Table	DVB SI Service Information
SDT	Service Descriptor Table	
BAT	Bouquet Association Table	
EIT	Event Information Table	
RST	Running Status Table	
TDT	Time&Date Table	
TOT	Time Offset Table	
ST	Stuffing Table	

Fig. 3.29. MPEG-2 PSI and DVB SI

NIT
Network Information Table
(PID=0x10, Table_ID=0x40/0x41)

Information about
physical network
(satellite, cable, terrestrial)

Netzwork provider name,
transmission parameter
(RF, QAM, FEC)

Fig. 3.30. Network Information Table (NIT)

The "network information table" (NIT) (Fig. 3.30., Fig. 3.31., Fig. 3.32.) describes all physical parameters of a DVB transmission channel. It contains, e.g. the received frequency and the type of transmission (satellite, cable, terrestrial) and also all the technical data of the transmission, i.e. error protection, type of modulation etc.. This table has the purpose of optimizing the channel scan as much as possible. A set-top box is able to store all the parameters of a physical channel when scanning during setup, and it

is possible, e.g. to broadcast information about all available physical channels within a network (e.g. satellite, cable), making it possible to do away with the actual physical search for channels.

The NIT contains the following information:

- Transmission path (satellite, cable, terrestrial)
- Received frequency
- Type of modulation
- Error protection
- Transmission parameters

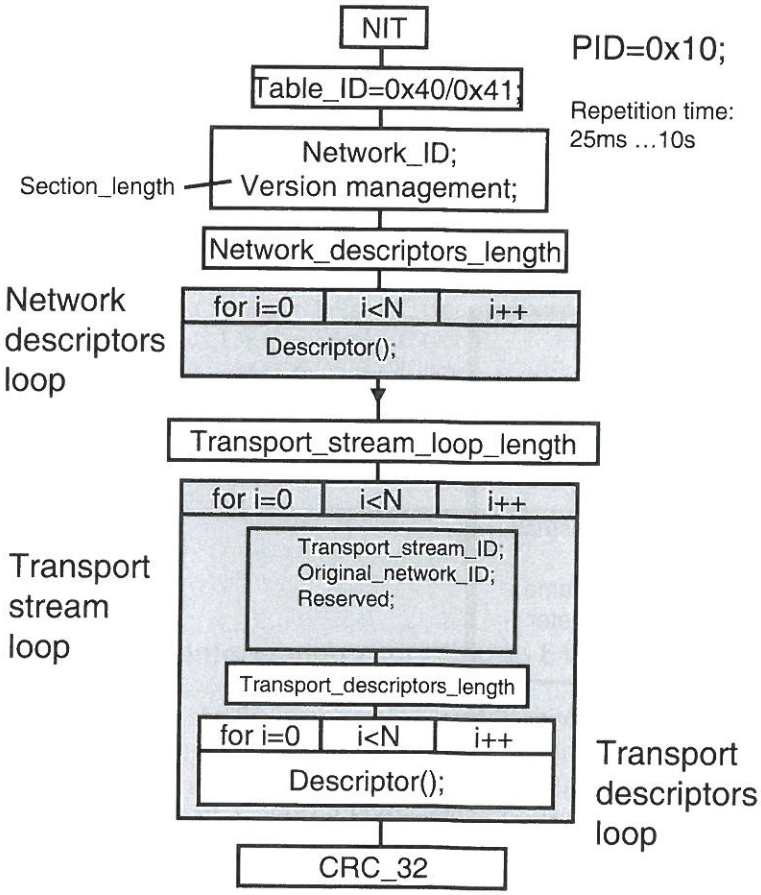

Fig. 3.31. Structure of the Network Information Table (NIT)

The important factor in relation to the NIT is that many receivers, i.e. set-top boxes, may behave in a "peculiar" manner if the transmission parameters in the NIT do not match the actual transmission. If, e.g. the transmit frequency given in the NIT does not correspond to the actual received frequency, many receivers, without any indication of reasons, may simply refuse to reproduce any picture or sound.

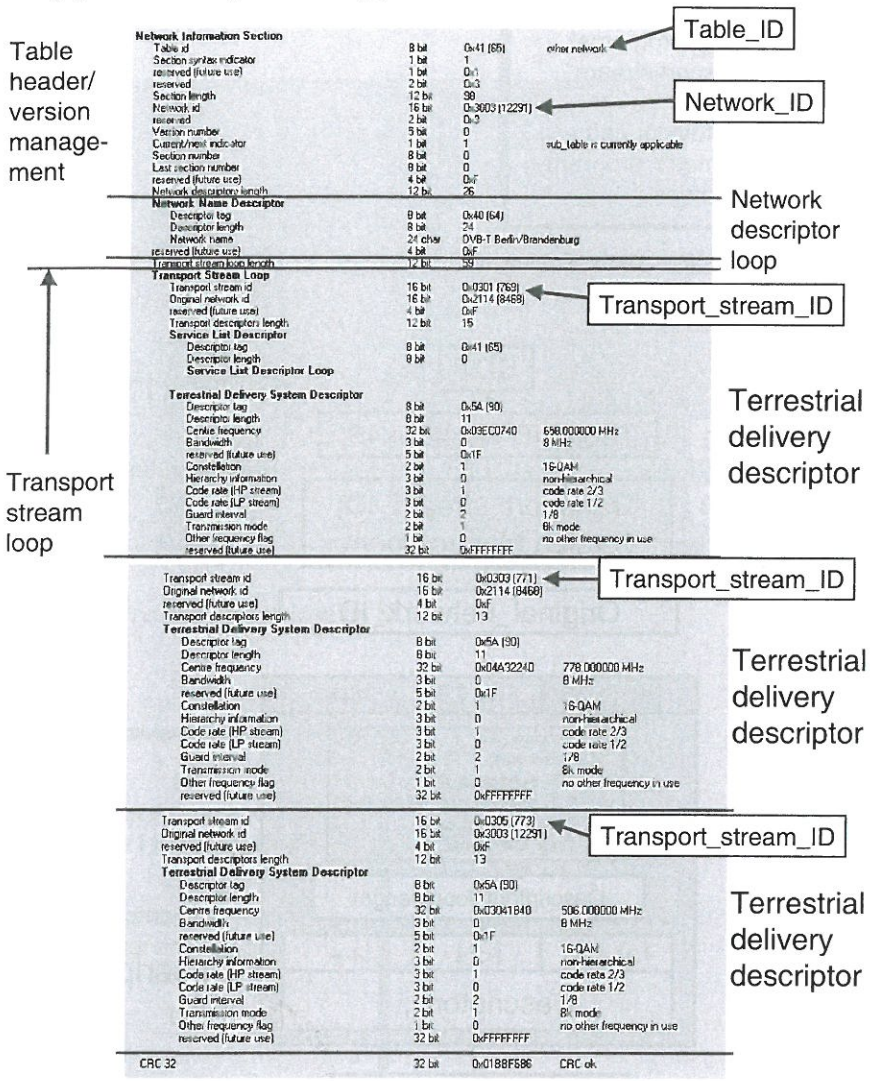

Fig. 3.32. Practical example of a Network Information Table (NIT)

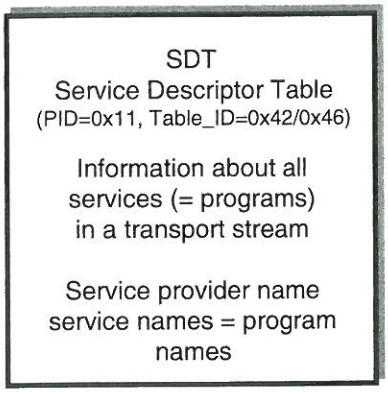

Fig. 3.33. Service Descriptor Table (SDT)

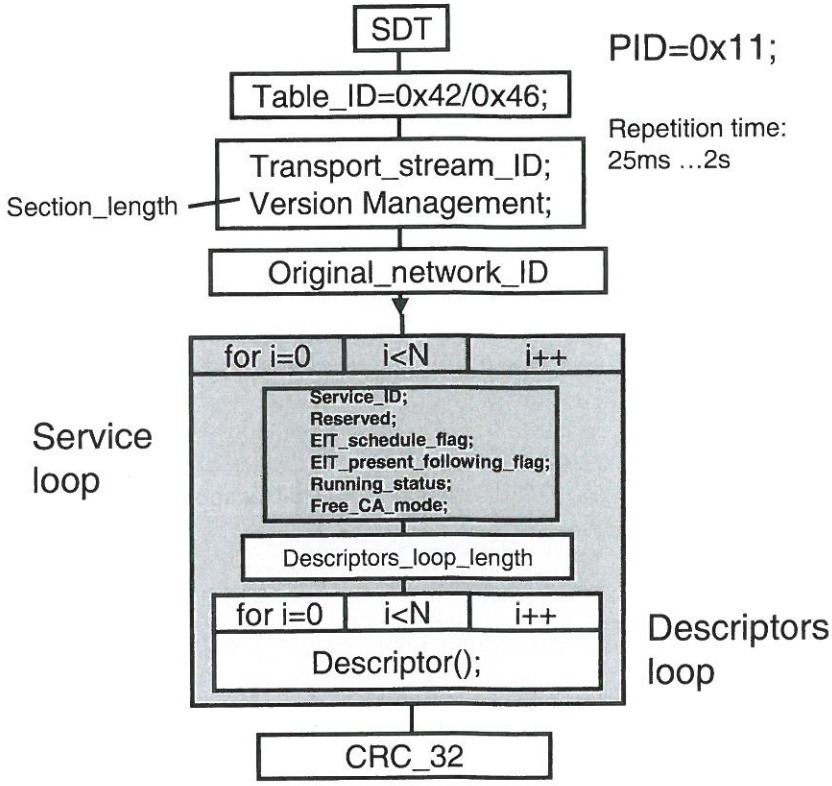

Fig. 3.34. Structure of the Service Descriptor Table (SDT)

The "service descriptor table" (SDT) contains more detailed descriptions of the programs carried in the transport stream, the "services". Among other things, these are the program titles such as, e.g. "CNN", "CBS", "Eurosport", "ARD", "ZDF", "BBC", "ITN" etc.. That is to say, in parallel with the program PIDs entered in the PAT, the SDT now contains textual information for the user. This is intended to facilitate the operation of the receiving device by providing lists of text.

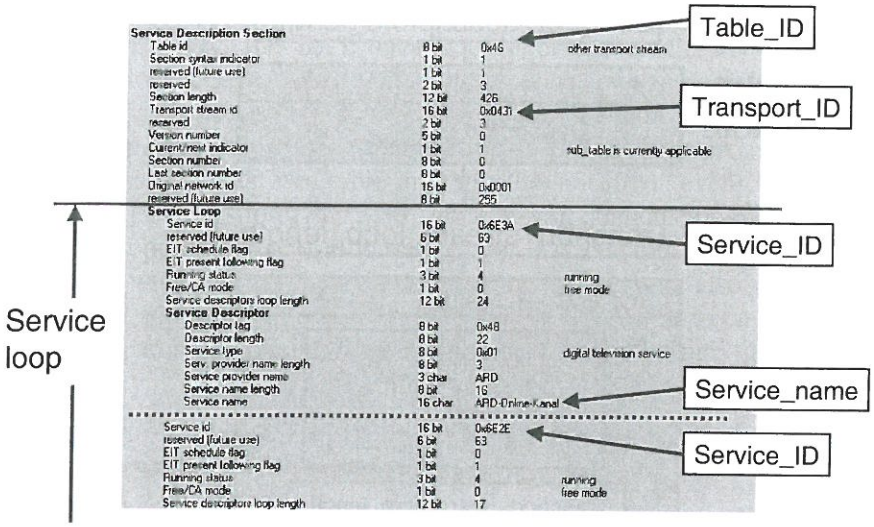

Service Description Section			
Table id	8 bit	0x46	other transport stream
Section syntax indicator	1 bit	1	
reserved (future use)	1 bit	1	
reserved	2 bit	3	
Section length	12 bit	426	
Transport stream id	16 bit	0x043f	
reserved	2 bit	3	
Version number	5 bit	0	
Current/next indicator	1 bit	1	sub_table is currently applicable
Section number	8 bit	0	
Last section number	8 bit	0	
Original network id	16 bit	0x0001	
reserved (future use)	8 bit	255	
Service Loop			
Service id	16 bit	0x6E3A	
reserved (future use)	6 bit	63	
EIT schedule flag	1 bit	0	
EIT present following flag	1 bit	1	
Running status	3 bit	4	running
Free/CA mode	1 bit	0	free mode
Service descriptors loop length	12 bit	24	
Service Descriptor			
Descriptor tag	8 bit	0x48	
Descriptor length	8 bit	22	
Service type	8 bit	0x01	digital television service
Serv. provider name length	8 bit	3	
Service provider name	3 char	ARD	
Service name length	8 bit	16	
Service name	16 char	ARD-Online-Kanal	
Service id	16 bit	0x6E2E	
reserved (future use)	6 bit	63	
EIT schedule flag	1 bit	0	
EIT present following flag	1 bit	1	
Running status	3 bit	4	running
Free/CA mode	1 bit	0	free mode
Service descriptors loop length	12 bit	17	

Fig. 3.35. Practical Example of an SDT

BAT
Bouquet Association Table
(PID=0x11, Table_ID=0x4A)

Combining some services to one bouquet

Fig. 3.36. Bouquet Association Table

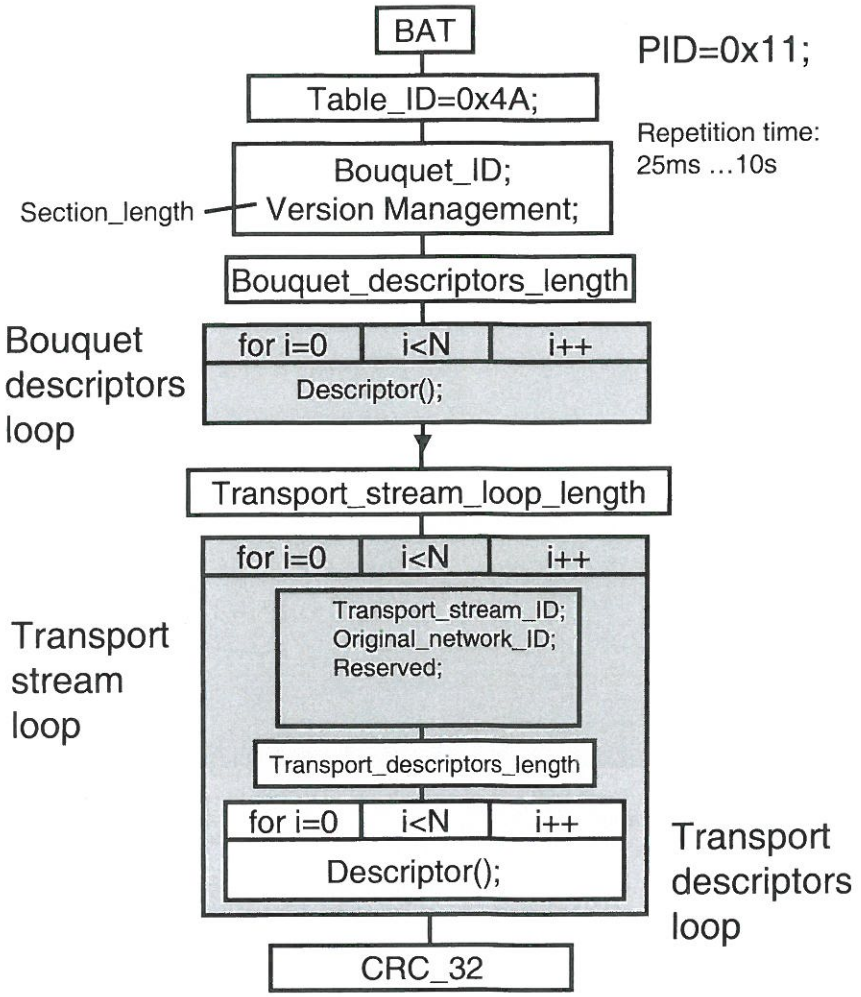

Fig. 3.37. Structure of a Bouquet Association Table (BAT)

A close relative of the service descriptor table is the "bouquet association table" (BAT). SDT and BAT have the same PID and differ only in the table ID. Whereas the SDT describes the program structure of one physical channel, a BAT describes the program structure of several physical channels or of a large number of physical channels.

The BAT is thus nothing else than a multi-channel program table. It provides an overview of all services contained in a group. Program providers can make use of e.g. an entire bouquet of physical channels if a single channel is insufficient for transmitting the complete range of programs

provided. An example of this is the pay TV provider "Premiere". A handful of satellite or cable DVB channels are combined here to form a bouquet of this provider's channels. The associated BAT is transmitted in all individual channels and links this bouquet together.

In fact, however, a bouquet association table is found very rarely in a transport stream. The broadcasters ARD and ZDF in Germany, and Premiere, are broadcasting a BAT for their respective bouquet and sometimes a BAT can be found in networks of cable network providers.

But frequently, the BAT doesn't exist at all, as already mentioned. When it does exist, it tells by way of so-called linkage descriptors which service of a particular service ID can be found in which transport streams.

Many providers are also transmitting an "electronic program guide" (EPG) which has its own table in DVB, the so-called "event information table", or EIT for short (Fig. 3.38. and 3.39.). It contains the planned starting and stopping times of all broadcasts of, e.g. one day or one week. The structure which is possible here is very flexible and also allows any amount of additional information to be transmitted. Unfortunately it is true that this feature is not supported by all set-top boxes, or only inadequately so.

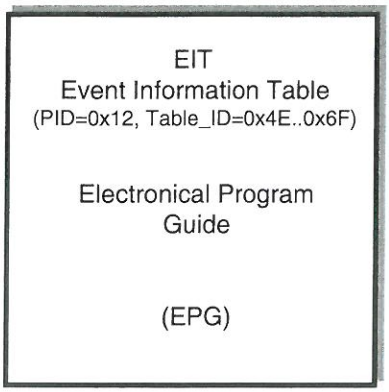

Fig. 3.38. EIT

Frequently, however, there are variations and delays in the planned starting and stopping times of broadcasts. To be able to start and stop, e.g. a video recorder at a given time, the relevant control information is transmitted in the "Running Status Table" (RST). The RST can thus be compared to the VPS (video program system) signal in the data line of an analog TV signal. The RST is currently not being used in practice, or, at least,

has not been found by the author in a transport stream anywhere in the world, excepting "synthetic" transport streams. Instead, the data line containing the VPS has been adapted within DVB for controlling video recorders and similar recording media.

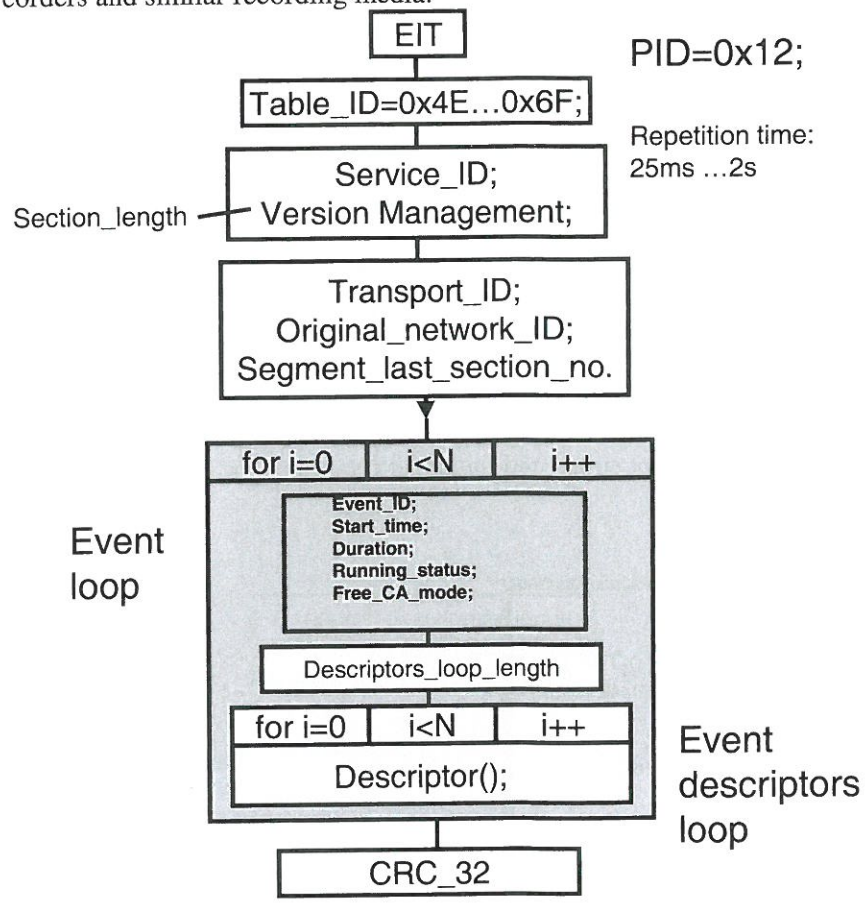

Fig. 3.39. Structure of the Event Information Table (EIT)

The operation of the set-top box also requires the transmission of the current clock time and the current date. This is done in two stages. In the "Time&Date Table" (TDT) (Fig. 3.42. and 3.43.), Greenwich Mean Time (GMT or UTC), i.e. the current clock time on the Zero-Degree meridian without any daylight saving time shift is transmitted. The respective applicable time offsets can then be broadcast in a "time offset table" (TOT) (Fig. 3.42. and 3.43.) for the various time zones. It depends on the software of the set-top box how the information contained in the TDT and TOT is

evaluated, and to what extent. Complete support for this broadcast time information would require the set-top box to be informed of its current location and in a country having a number of time zones such as Australia, especially, more attention should be paid to this point.

It may sometimes be necessary to cancel certain information, especially tables in the transport stream. After a DVB-S signal has been received in a CATV head station, it can quite easily happen that, e.g. the NIT must be exchanged or overwritten or that individual programs must be rendered unusable for relaying. This can be done by means of the "stuffing table" (ST) (Fig. 3.44.) which enables information in the transport stream to be overwritten.

Event Information Section			
Table id	8 bit	0x50	actual transport stream, schedule
Section syntax indicator	1 bit	1	
reserved (future use)	1 bit	1	
reserved	2 bit	3	
Section length	12 bit	1731	
Service id	16 bit	0x6DD1	Service_ID
reserved	2 bit	3	
Version number	5 bit	27	
Current/next indicator	1 bit	1	sub_table is currently applicable
Section number	8 bit	8	
Last section number	8 bit	56	
Transport stream id	16 bit	0x044D	Transport_stream_ID
Original network id	16 bit	0x0001	
Segment last section number	8 bit	8	
Last table id	8 bit	80	
Event Loop			
Event id	16 bit	0x4916	Event_ID
Start time	40 bit	0xCA7A	2000/10/17
		0x030000	03:00:00
Duration	24 bit	0x003000	00:30:00
Running status	3 bit	0	undefined
Free/CA mode	1 bit	0	free mode
Descriptors loop length	12 bit	352	
Short Event Descriptor			
Descriptor tag	8 bit	0x4D	
Descriptor length	8 bit	9	
ISO 639 language code	3 char	deu	
Event name length	8 bit	4	
Event name	4 char	nano	
Text length	8 bit	0	
Text name	0 char		
Reserved Descriptor			
Descriptor tag	8 bit	0x69	
Descriptor length	8 bit	3	
Descriptor Data (hex)	3 bytes	F2 E0 00	

Start Time & Duration

Fig. 3.40. Event Information Table (practical example)

RST
Running Status Table
(PID=0x13,Table ID=0x71)

Current status of a event

Fig. 3.41. Running Status Table (RST)

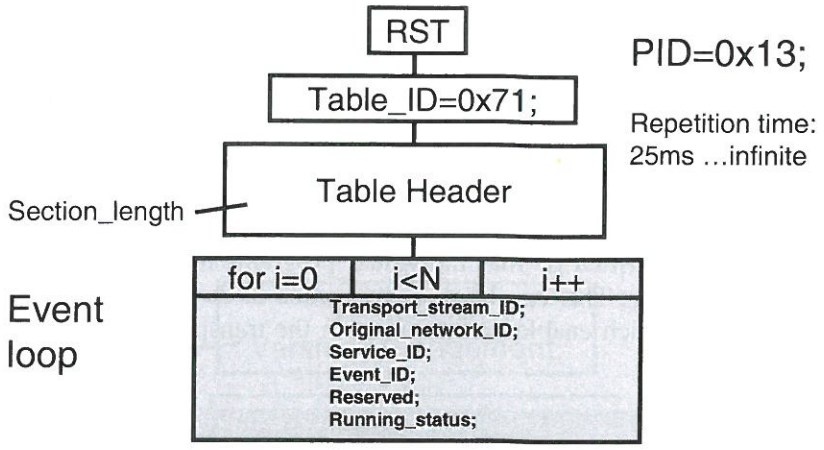

Fig. 3.42. Structure of the Running Status Table (RST)

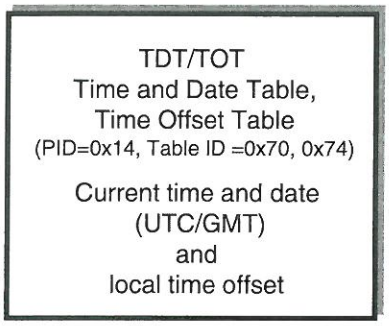

Fig. 3.43. Time and Date Table (TDT) and Time Offset Table (TOT)

The PIDs and the table IDs for the service information have been permanently allocated within DVB in Table 3.2.

The PSI/SI tables are linked to one another via the most varied identifiers (Fig. 3.45.). These are both PIDs and special, table-dependent identifiers. In the PAT, the PMT_PIDs are chained together by way of the prog_no. To each prog_no, a PMT_PID is allocated which refers to a transport stream packet with the corresponding PMT of this associated program. The prog_no can then also be found in the header of the respective PMT. Prog_no = 0 is allocated to the NIT where the PID of the NIT can be found.

Time and Date Section			
Table id	8 bit	0x70	
Section syntax indicator	1 bit	0	
reserved (future use)	1 bit	1	
reserved	2 bit	3	
Section length	12 bit	5	
UTC time	40 bit	0xCA79	2000/10/16
		0x105827	10:58:27
Time Offset Section			
Table id	8 bit	0x73 (115)	
Section syntax indicator	1 bit	0	
reserved (future use)	1 bit	0x1	
reserved	2 bit	0x3	
Section length	12 bit	26	
UTC time	40 bit	0xCA79	2000/10/16
		0x112519	11:25:19
reserved	4 bit	0xF	
Descriptors loop length	12 bit	15	
Local Time Offset Descriptor			
Descriptor tag	8 bit	0x58 (88)	
Descriptor length	8 bit	13	
Country Loop			
Country code	3 char	DEU	
Country region id	6 bit	0	no time zone extension used
reserved	1 bit	0x1	
Local time offset polarity	1 bit	0	local time is advanced to UTC
Local time offset	16 bit	0x0200	02:00
Time of change	40 bit	0xCA86	2000/10/29
		0x030000	03:00:00
Next time offset	16 bit	0x0100	01:00
CRC 32	32 bit	0xD49C603D	CRC ok

Fig. 3.44. Example of a Time and Date Table (TDT and Time Offset Table (TOT)

ST
Stuffing Table
(Table ID=0x72)

Cancellation
of sections
and tables in a
distribution network

e.g. at cable headends

Fig. 3.45. Stuffing Table (ST)

Table 3.2. PIDs and table IDs of the PSI/SI tables

Table	PID	Table_ID
PAT	0x0000	0x00
PMT	0x0020...0x1FFE	0x02
CAT	0x0001	0x01
NIT	0x0010	0x40...0x41
BAT	0x0011	0x4A
SDT	0x0011	0x42, 0x46
EIT	0x0012	0x4E...0x6F
RST	0x0013	0x71
TDT	0x0014	0x70
TOT	0x0014	0x73
ST	0x0010...0x0014	0x72

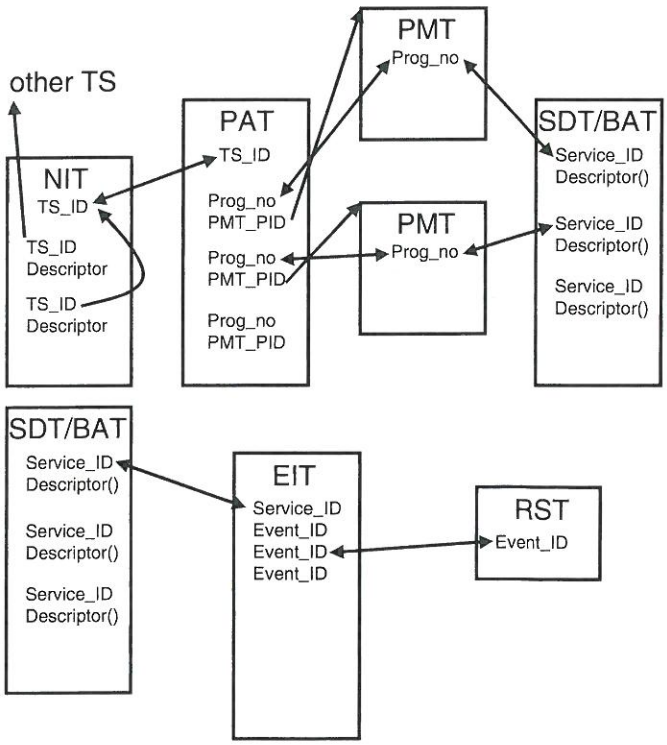

Fig. 3.46. Links between the PSI/SI tables

In the NIT, the physical parameters of all transport streams of a network are described via their TS_IDs. A TS_ID corresponds to the current transport stream; precisely this TS_ID can be found in the header of the PAT at the position of the Table ID extension.

The services (= programs) contained in this transport stream are listed in the service descriptor table via the service IDs. The service IDs must correspond to the prog_no in the PAT and in the PMTs.

This is continued in the EIT: there is an EIT for every service. In the header of the EIT, the table_ID_extension corresponds to the service_ID of the associated program. In the EIT, the events are associated with these by way of event_IDs. If there are associated RSTs, then these are chained to the respective RST via these event_IDs.

Table 3.3. Repetition rates of the PSI/SI tables according to MPEG/DVB

PSI/SI table	Max. interval (complete table)	Min. interval (single sections)
PAT	0.5 s	25 ms
CAT	0.5 s	25 ms
PMT	0.5 s	25 ms
NIT	10 s	25 ms
SDT	2 s	25 ms
BAT	10 s	25 ms
EIT	2 s	25 ms
RST	-	25 ms
TDT	30 s	25 ms
TOT	30 s	25 ms

The repetition rates of the PSI/SI tables are regulated through MPEG-2 Systems [ISO&IEC 13818/1] and DVB/SI [ETS 300468] (Table 3.3)

3.4 The PSIP according to the ATSC

In the US, a separate standard was specified for digital terrestrial and cable TV. This is the ATSC standard, where ATSC stands for Advanced Television System Committee. During the work on the ATSC standard, the decision was made to use the MPEG-2 transport stream with MPEG-2 video and AC-3 Dolby Digital audio as the baseband signal. The type of modulation used is 8 or 16VSB. In addition, it was recognized that other tables going beyond PSI are needed. Like the SI tables in DVB, ATSC, therefore,

has the PSIP tables, listed below and described in more detail in the text which follows.

PAT	Program Association Table	MPEG-2 PSI Program Specific Information
PMTs	Program Map Table	
CAT	Conditional Access Table	
Private Tables		

MGT	Master Guide Table	ATSC PSIP Program and System Information Protocol
EIT	Event Information Table	
ETT	Extended Text Table	
STT	System Time Table	
RTT	Rating Region Table	
CVCT	Cable Virtual Channel Table	
TVCT	Terrestrial Virtual Channel Table	

Fig. 3.47. ATSC PSIP tables

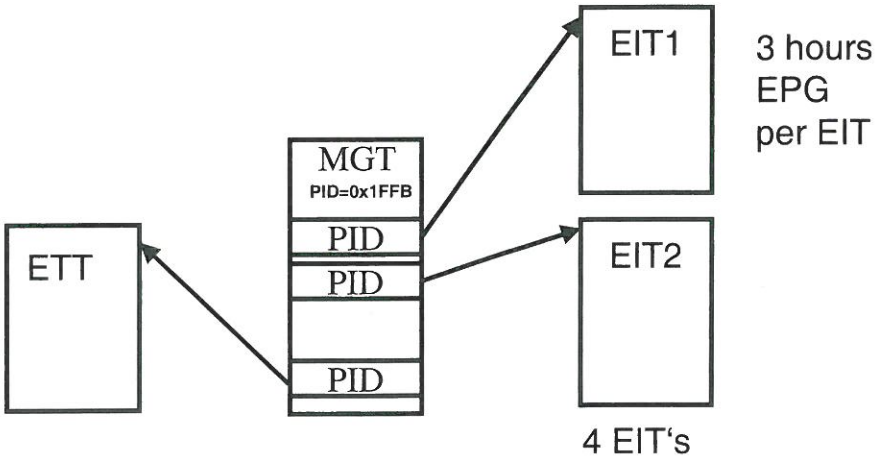

Fig. 3.48. Referencing the PSIP in the MGT

PSIP stands for "program and system information protocol" and is nothing else than another way of representing similar information to that given in the previous section on DVB SI. In ATSC, the following tables are used: the Master Guide Table (MGT) (Fig. 3.47.), the Event Information Table (EIT), the Extended Text Table (ETT), the System Time Table

(STT), the Rating Region Table (RRT), and the Cable Virtual Channel Table (CVCT) or the Terrestrial Virtual Channel Table (TVCT).

According to ATSC, the PSI tables defined in MPEG-2 and provided in the MPEG Standard are used for accessing the video and audio streams, i.e. the transport stream carries one PAT and several PMTs. The conditional access information is also referenced via a CAT.

The actual ATSC tables are implemented as "private tables". The Master Guide Table, the main table, so to say, contains the PIDs for some of these ATSC tables. The Master Guide Table can be recognized by the packet ID = 0x1FFB and the table ID = 0xC7. The transport stream must contain at least four Event Information Tables (EIT-0, EIT-1, EIT-2, EIT-3) and the PIDs for these EITs are found in the Master Guide Table. Up to 128 further Event Information Tables are possible but are optional. An EIT contains a 3-hour section of an electronic program guide (EPG). Together with the 4 mandatory EITs, it is thus possible to cover a period of 12 hours. Furthermore, Extended Text Tables can be optionally accessed through the MGT. Each existing Extended Text Table (ETT) is allocated to one EIT. Thus, e.g. ETT-0 contains extended text information for EIT-0. It is possible to have up to a total of 128 ETTs.

Table 3.4. PSIP tables

Table	PID	Table ID
Program Association Table (PAT)	0x0	0x0
Program Map Table (PMT)	über PAT	0x2
Conditional Access Table (CAT)	0x1	0x1
Master Guide Table (MGT)	0x1FFB	0xC7
Terrestrial Virtual Channel Table (TVCT)	0x1FFB	0xC8
Cable Virtual Channel Table (CVCT)	0x1FFB	0xC9
Rating Region Table (RRT)	0x1FFB	0xCA
Event Information Table (EIT)	über PAT	0xCB
Extended Text Table (ETT)	über PAT	0xCC
System Time Table (STT)	0x1FFB	0xCD

In the Virtual Channel Table, which can be present either as Terrestrial Virtual Channel Table (TVCT) or as Cable Virtual Channel Table (CVCT) depending on the transmission path, identification information for the virtual channels, i.e. programs, contained in a multiplexed transport stream are transmitted. The VCT contains, among other things, the program names. The VCT is thus comparable to the SDT table in DVB:

In the System Time Table (STT), all the necessary time information is transmitted. The STT can be recognized by the packet ID = 0x1FFB and the table ID = 0xCD. In the STT, the GPS (Global Positioning System)

time and the time difference between GPS time and UTC (Universal Time Coordinated (= GMT)) is transmitted. The Rating Region Table (RRT) can be used for restricting the size of the audience in terms of age or region. In addition to the information about region (e.g. a Federal State in the US), information relating to the minimum age set for the program currently being broadcast is also included. Using the RRT, a type of parental lock can thus be implemented in the set-top box. The RRT is recognized by the packet ID = 0x1FFB and the table ID = 0xCA.

The PIDs and Table IDs of the PSIP tables are listed in Table 3.4.

3.5 ARIB Tables according to ISDB-T

Like DVB (Digital Video Broadcasting) and ATSC (Advanced Television Systems Committee), Japan, too, has defined its own tables in its ISDB-T (Integrated Services Digital Broadcasting – Terrestrial) standard. These are called ARIB (Association of Radio Industries and Business) tables according to ARIB Std. B.10.

According to the ARIB standard, the following tables are proposed:

Table 3.5. ARIB tables

Type	Name	Note
PAT	Program Association Table	ISO/IEC 13818-1 MPEG-2
PMT	Program Map Table	ISO/IEC 13818-1 MPEG-2
CAT	Conditional Access Table	ISO/IEC 13818-1 MPEG-2
NIT	Network Information Table	like DVB-SI, ETS 300468
SDT	Service Description Table	like DVB-SI, ETS 300468
BAT	Bouquet Association Table	like DVB-SI, ETS 300468
EIT	Event Information Table	like DVB-SI, ETS 300468
RST	Running Status Table	like DVB-SI, ETS 300468
TDT	Time&Date Table	like DVB-SI, ETS 300468
TOT	Time Offset Table	like DVB-SI, ETS 300468
LIT	Local Event Information Table	
ERT	Event Relation Table	
ITT	Index Transmission Table	
PCAT	Partial Content Announcement Table	
ST	Stuffing Table	like DVB-SI, ETS 300468
BIT	Broadcaster Information Table	
NBIT	Network Board Information Table	

LDT	Linked Description Table
and others	
ECM	Entitlement Control Message
EMM	Entitlement Management Message
DCT	Download Control Table
DLT	Download Table
SIT	Selection Information Table
SDTT	Software Download Trigger Table
DSM-CC	Digital Storage Media Command & Control

Table 3.6. PID's and table IDs of the ARIB tables

Table	PID	Table ID
PAT	0x0000	0x00
CAT	0x0001	0x01
PMT	über PAT	0x02
DSM-CC	über PMT	0x3A...0x3E
NIT	0x0010	0x40, 0x41
SDT	0x0011	0x42, 0x46
BAT	0x0011	0x4A
EIT	0x0012	0x4E...0x6F
TDT	0x0014	0x70
RST	0x0013	0x71
ST	all except 0x0000, 0x0001, 0x0014	0x72
TOT	0x0014	0x73
DIT	0x001E	0x7E
SIT	0x001F	0x7F
ECM	via PMT	0x82...0x83
EMM	via CAT	0x84...0x85
DCT	0x0017	0xC0
DLT	via DCT	0xC1
PCAT	0x0022	0xC2
SDTT	0x0023	0xC3
BIT	0x0024	0xC4
NBIT	0x0025	0xC5, 0xC6
LDT	0x0025	0xC7
LIT	via PMT or 0x0020	0xD0

The BAT, PMT and CAT tables fully correspond to the MPEG-2 PSI. Similarly, the NIT, SDT, BAT, EIT, RST, TDT. TOT and ST tables have

exactly the same structure as in DVB SI and also have the same functionality. The ARIB Standard thus also makes reference to ETSI 300468.

3.6 DMB-T (China) Tables

China, too, have their own digital terrestrial television standard named DMB-T – Digital Multimedia Broadcasting – Terrestrial. It can be assumed that there is also an independent or modified or copied table of comparable significance to DVB-SI but there have been no publications regarding what modifications, if any, were made.

3.7 Other Important Details of the MPEG-2 Transport Stream

In the section below, other details of the MPEG-2 transport stream will be discussed in more detail.

Apart from the sync bytes (synchronization to the transport stream) already mentioned, the transport stream error indicator and the packet identifier (PID), the transport stream header also contains:

- the Payload Unit Start Indicator,
- the Transport Priority,
- the Transport Scrambling Control,
- the Adaptation Field Control, and
- the Continuity Counter.

The Payload Unit Start Indicator is a bit which marks the start of a payload. If this bit is set, it means that a new payload is starting in this transport stream packet: this transport stream packet contains either the start of a video or audio PES packet plus PES header, or the beginning of a table plus table ID as the first byte in the payload part of the transport stream packet.

3.7.1 The Transport Priority

This bit indicates that this transport stream packet has a higher priority than other TS packets with the same PID.

3.7.2 The Transport Scrambling Control Bits

The two Transport Scrambling Control Bits show whether the payload part of a TS packet is scrambled or not. If both bits are set to zero, this means that the payload section is transmitted unscrambled. If one of the two bits is not zero, the payload is transmitted scrambled. A Conditional Access Table is then needed to descramble the payload.

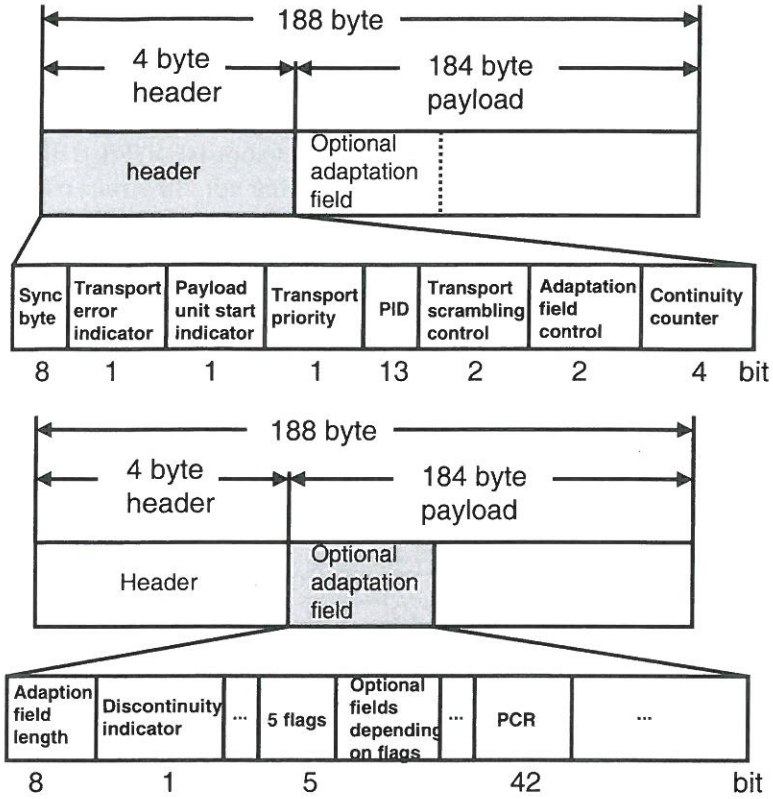

Fig. 3.49. Other details in the MPEG-2 transport stream

3.7.3 The Adaptation Field Control Bits

These two bits indicate whether there is an extended header, i.e. an adaptation field, or not. If both bits are set to zero, there is no adaptation field. If there is an adaptation field, the payload part is shortened and the header becomes longer but the total packet length remains a constant 188 bytes.

3.7.4 The Continuity Counter

Each transport stream packet with the same PID carries its own 4-bit counter. This is the continuity counter which continuously counts from 0 - 15 from TS packet to TS packet and then begins again from 0. The continuity counter makes it possible to recognize missing TS packets and to identify an errored data stream (counter discontinuity). It is possible, and permissible, to have a discontinuity with a program change which is then indicated by the Discontinuity Indicator in the adaptation field.

Bibliography: [ISO 13818/1], [ETS 300468], [A53], [REIMERS], [SIGMUNT], [DVG], [DVDM], [GRUNWALD], [FISCHER], [FISCHER4], [DVM]