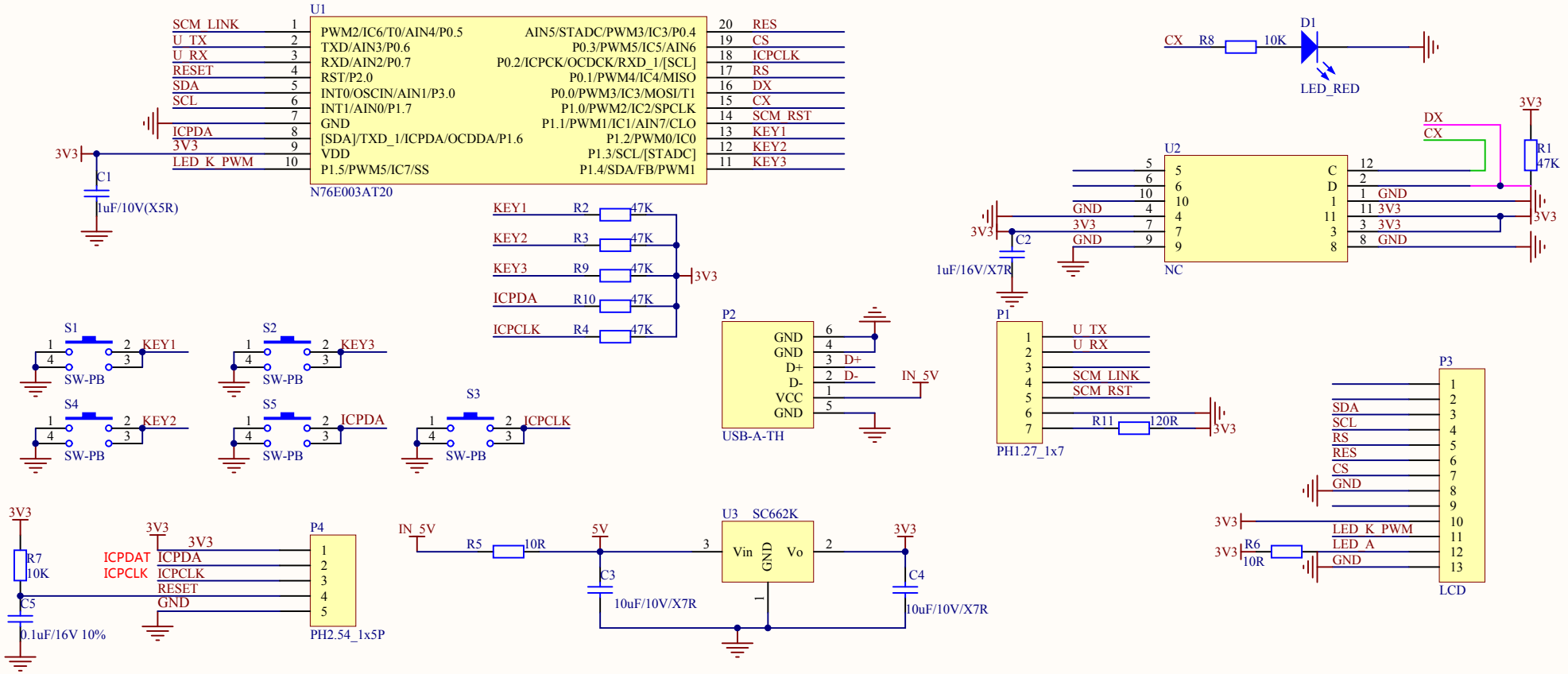

Title		
Size A4	Number	Revision
Date: 2020/2/15		Sheet of
File: D:\hua\..\sh_atx_v1.0.SchDoc		Drawn By: