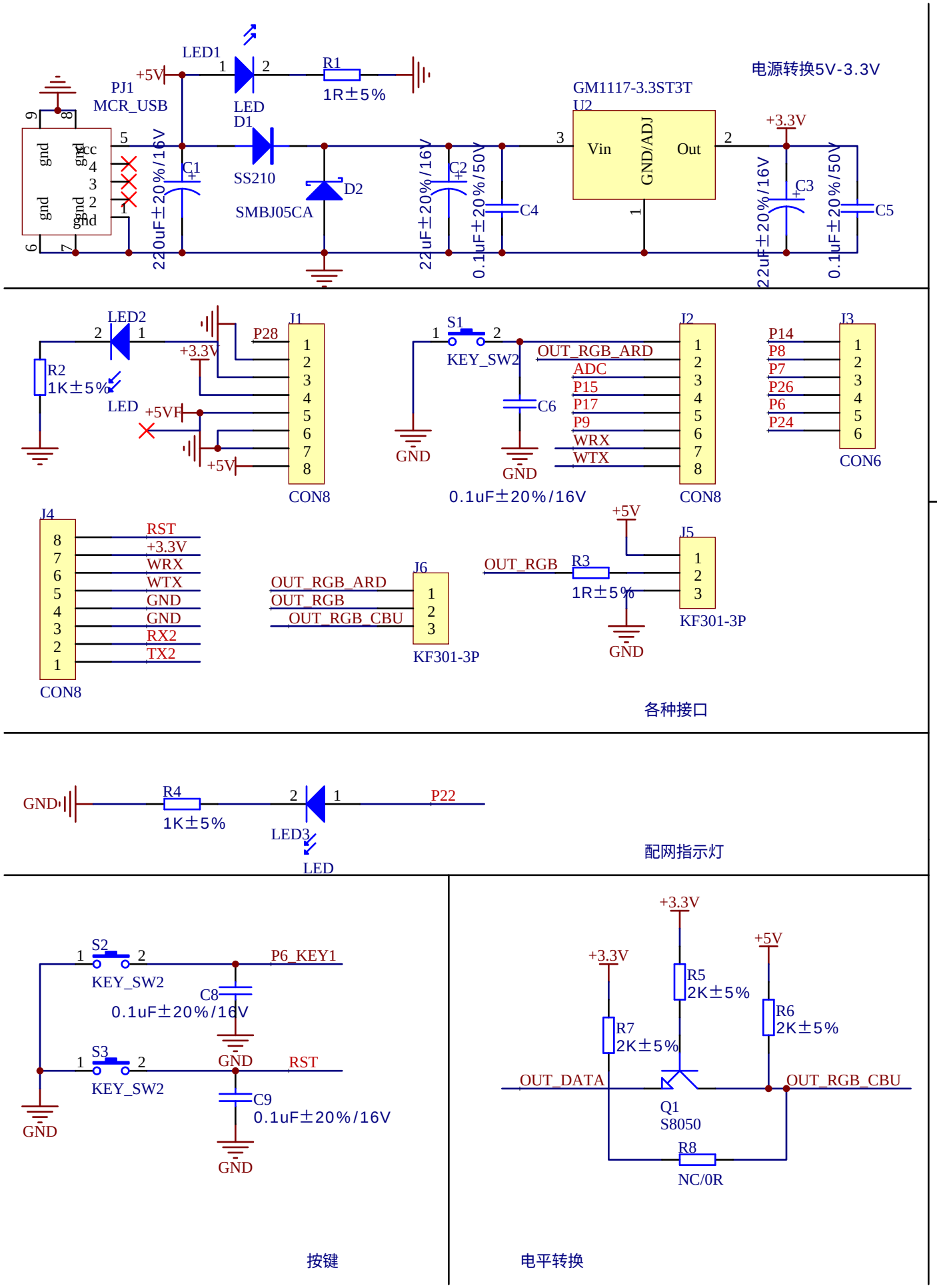
电源转换5V-3.3V
PJ1
MCR_USB
+5V
LED1
LED
R1
1R±5%
D1
SS210
D2
SMBJ05CA
C1
220uF±20%/16V
C2
22uF±20%/16V
C4
0.1uF±20%/50V
GM1117-3.3ST3T
U2
Vin
GND/ADJ
Out
+3.3V
C3
22uF±20%/16V
C5
0.1uF±20%/50V
LED2
R2
1K±5%
LED
+5VF
J1
CON8
S1
KEY_SW2
C6
0.1uF±20%/16V
J2
CON8
J3
CON6
J4
CON8
J5
KF301-3P
J6
KF301-3P
OUT_RGB_ARD
OUT_RGB
OUT_RGB_CBU
R3
1R±5%
GND
各种接口
GND
R4
1K±5%
LED3
LED
P22
配网指示灯
S2
KEY_SW2
P6_KEY1
C8
0.1uF±20%/16V
S3
KEY_SW2
RST
C9
0.1uF±20%/16V
按键
+3.3V
+5V
R5
2K±5%
R6
2K±5%
R7
2K±5%
OUT_DATA
OUT_RGB_CBU
Q1
S8050
R8
NC/0R
电平转换

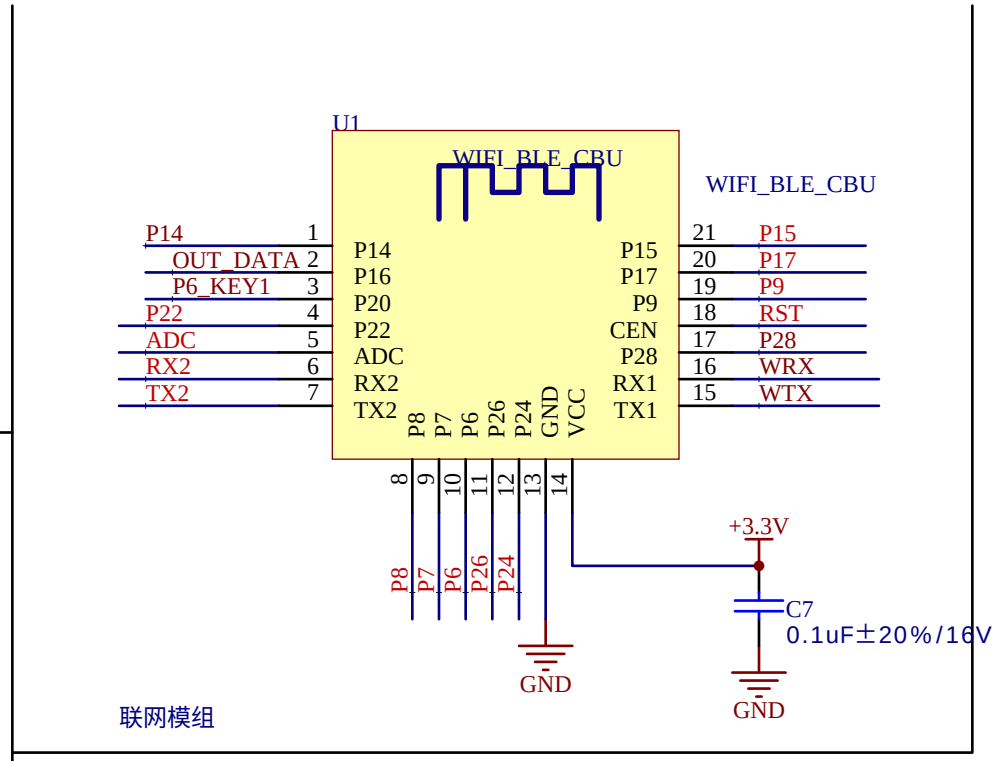
U1
WIFI_BLE_CBU
WIFI_BLE_CBU
P14
OUT_DATA
P6_KEY1
P22
ADC
RX2
TX2
P14
P16
P20
P22
ADC
RX2
TX2
P15
P17
P9
CEN
P28
RX1
TX1
P15
P17
P9
RST
P28
WRX
WTX
P8
P7
P6
P26
P24
GND
VCC
+3.3V
C7
0.1uF±20%/16V
GND
GND
联网模组