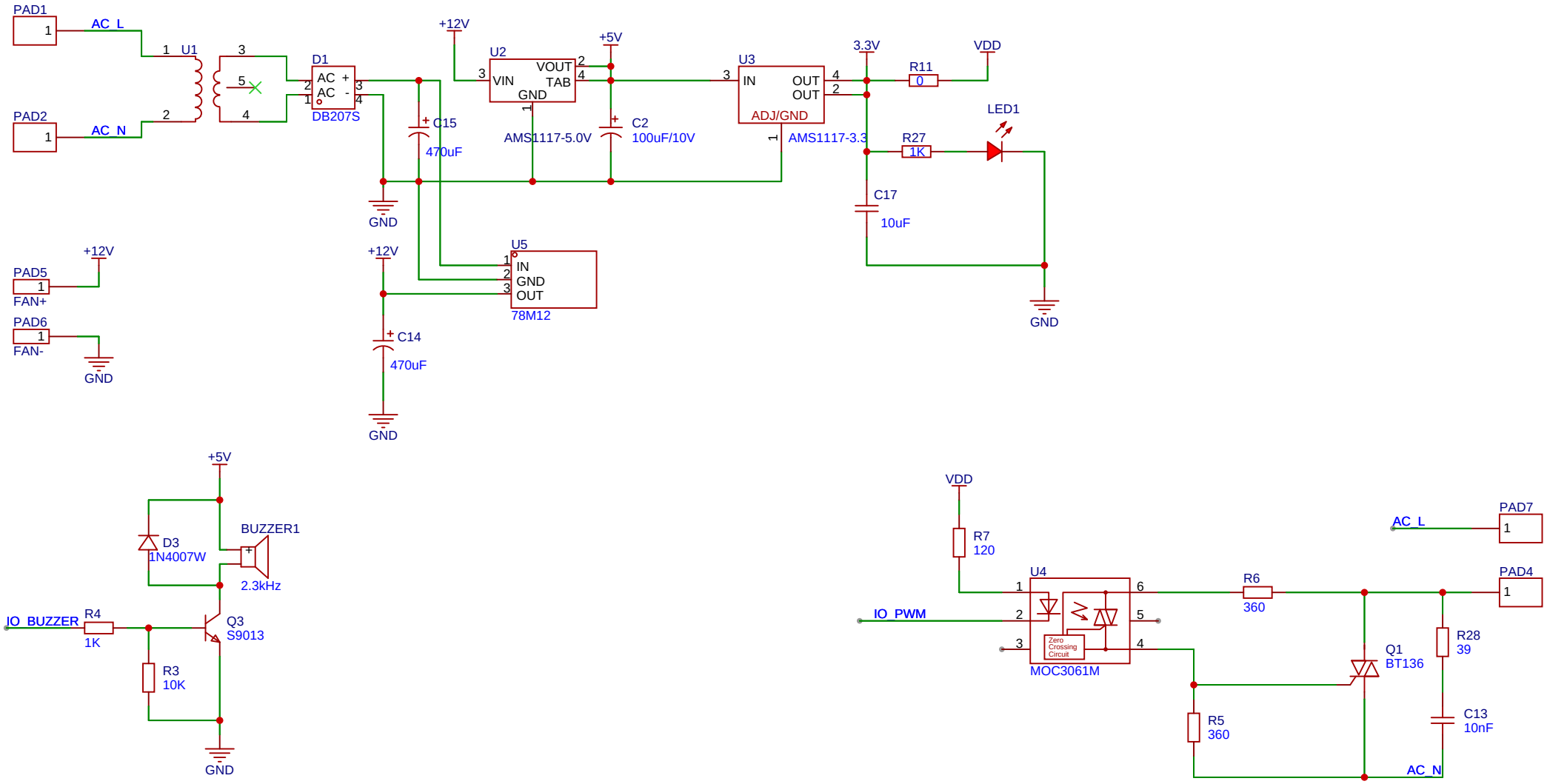

Schematic	Schematic1	Update Date	2023-11-30
		Create Date	2023-05-21
Page	P1	Part Number	
Drawed		hot_plate	
Reviewed			
		VER	SIZE	PAGE 1 OF 2
嘉立创EDA		V1.0	A4	嘉立创EDA

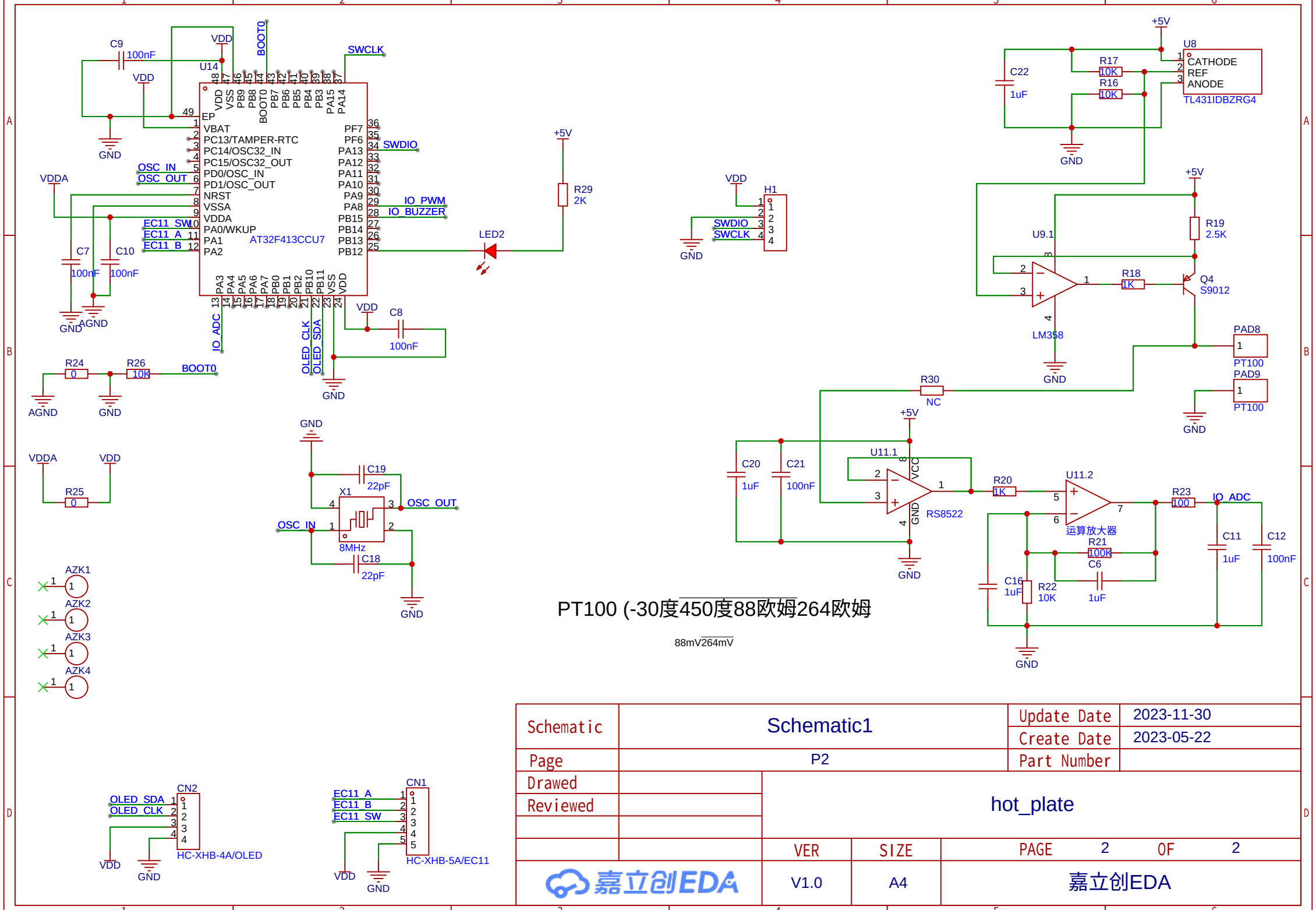

Schematic	Schematic1	Update Date	2023-11-30
		Create Date	2023-05-22
Page	P2	Part Number	
Drawed			
Reviewed		hot_plate	
		VER	SIZE	PAGE 2 OF 2
嘉立创EDA		V1.0	A4	嘉立创EDA