ITE 聯陽半導體
ITE Tech. Inc.

IT8613E

Environment Control – Low Pin Count Input / Output (EC - LPC I/O)

Preliminary Specification V0.3

(For E Version)

ITE TECH. INC.

CONFIDENTIAL

This specification is subject to Change without notice. It is provided "AS IS" and for reference only. For purchasing information, please contact the nearest ITE TECH sales representatives.
Please note that the IT8613E V0.3 is applicable only to the E version.

CONFIDENTIAL

Copyright © 2016 ITE Tech. Inc.

This is a Preliminary document release. All specifications are subject to change without notice.
The material contained in this document supersedes all previous material issued for the products herein referenced. Please contact ITE Tech. Inc. for the latest document(s).

All sales are subject to ITE's Standard Terms and Conditions, a copy of which is included in the back of this document.

ITE, IT8613E is a trademark of ITE Tech. Inc.
All other trademarks are claimed by their respective owners.
All specifications are subject to change without notice.

Additional copies of this manual or other ITE literature may be obtained from:

ITE Tech. Inc.
Marketing Department
7F, No.233-1, Baociao Rd., Sindian City,
Taipei County 23145, Taiwan, ROC

Phone: (02) 29126889
Fax: (02) 2910-2551, 2910-2552

If you have any marketing or sales questions, please contact:
P.Y. Chang, at ITE Taiwan:
E-mail: p.y.chang@ite.com.tw, Tel: 886-2-29126889 X6052, Fax: 886-2-29102551

You may also find the local sales representative nearest you on the ITE web site.

To find out more about ITE, visit our World Wide Web at:
http://www.ite.com.tw

Or e-mail **itesupport@ite.com.tw** for more product information/services

CONFIDENTIAL

CONFIDENTIAL

Revision History

The contents below indicate the change between this version and the previous version only. The revision history shown in the previous version will not remain in the following table.

Section	Revision	Page No.
-	• E version initial release	-

CONFIDENTIAL

CONFIDENTIAL

CONTENTS

1. Features 1
2. General Description 3
3. Block Diagram 5
4. Pin Configuration 7
5. Pin Description 9
6. List of GPIO Pins 23
7. Power On Strapping Options and Special Pin Routings 27
8. Configuration 29
8.1 Configuring Sequence 29
8.2 Configuration Registers 31
8.2.1 Logical Device Base Address 35
8.3 Global Configuration Registers (LDN: All) 36
8.3.1 Configure Control (Index=02h) 36
8.3.2 Logical Device Number (LDN, Index=07h) 36
8.3.3 Chip ID Byte 1 (Index=20h, Default=86h) 36
8.3.4 Chip ID Byte 2 (Index=21h, Default=13h) 36
8.3.5 Chip Version (Index=22h, Default=05h) 36
8.3.6 Clock Selection Register (Index=23h, Default=40h) 36
8.3.7 Special Register (Index=24h, Default=00h) 37
8.3.8 GPIO Set 1 Multi-Function Pin Selection Register (Index=25h, Default=00h) 37
8.3.9 GPIO Set 2 Multi-Function Pin Selection Register (Index=26h, Default=F3h) 38
8.3.10 GPIO Set 3 Multi-Function Pin Selection Register (Index=27h, Default=00h) 38
8.3.11 GPIO Set 4 Multi-Function Pin Selection Register (Index=28h, Default=00h) 39
8.3.12 GPIO Set 5 Multi-Function Pin Selection Register (Index=29h, Default=00h) 39
8.3.13 Special Function Selection Register 1 (Index=2Ah, Default=01h) 40
8.3.14 Special Function Selection Register 2 (Index=2Bh, Default=48h) 41
8.3.15 Special Function Selection Register 3 (Index=2Ch, Default=01h) 41
8.3.16 Special Function Selection Register 4 (Index=2Dh, Default=00h) 41
8.3.17 Test 1 Register (Index=2Eh, Default=00h) 42
8.3.18 Test 2 Register (Index=2Fh, Default=00h) 42
8.4 Serial Port 1 Configuration Registers (LDN=01h) 43
8.4.1 Serial Port 1 Activate (Index=30h, Default=00h) 43
8.4.2 Serial Port 1 Base Address MSB Register (Index=60h, Default=03h) 43
8.4.3 Serial Port 1 Base Address LSB Register (Index=61h, Default=F8h) 43
8.4.4 Serial Port 1 Interrupt Level Select (Index=70h, Default=04h) 43
8.4.5 Serial Port 1 Special Configuration Register 1 (Index=F0h, Default=00h) 43
8.5 Environment Controller Configuration Registers (LDN=04h) 44
8.5.1 Environment Controller Activate (Index=30h, Default=00h) 44
8.5.2 Environment Controller Base Address MSB Register (Index=60h, Default=02h) 44
8.5.3 Environment Controller Base Address LSB Register (Index=61h, Default=90h) 44
8.5.4 PME Direct Access Base Address MSB Register (Index=62h, Default=02h) 44
8.5.5 PME Direct Access Base Address LSB Register (Index=63h, Default=30h) 44
8.5.6 Environment Controller Interrupt Level Select (Index=70h, Default=09h) 44
8.5.7 APC/PME Event Enable Register (PER) (Index=F0h, Default=00h) 45
8.5.8 APC/PME Status Register (PSR) (Index=F1h, Default=00h) 45
8.5.9 APC/PME Control Register 1 (PCR 1) (Index=F2h, Default=00h) 45
8.5.10 Environment Controller Special Configuration Register (Index=F3h, Default=00h) 46
8.5.11 APC/PME Control Register 2 (PCR 2) (Index=F4h, Default=00h) 46
8.5.12 APC/PME Special Code Index Register (Index=F5h) 47
8.5.13 APC/PME Special Code Data Register (Index=F6h) 47

CONFIDENTIAL

8.5.14 Special Configuration Register 1 (Index=FAh, Default=00h) 47
8.5.15 Special Configuration Register 2 (Index=FBh, Default=00h) 47
8.5.16 PWRON# Delay Selection Register (Index=FCh, Default=00h)....48
8.6 KBC(Keyboard) Configuration Registers (LDN=05h)....49
8.6.1 KBC(Keyboard) Activate (Index=30h, Default=01h)....49
8.6.2 KBC(Keyboard) Data Base Address MSB Register (Index=60h, Default=00h) 49
8.6.3 KBC(Keyboard) Data Base Address LSB Register (Index=61h, Default=60h) 49
8.6.4 KBC(Keyboard) Command Base Address MSB Register (Index=62h, Default=00h) 49
8.6.5 KBC(Keyboard) Command Base Address LSB Register (Index=63h, Default=64h) 49
8.6.6 KBC(Keyboard) Interrupt Level Select (Index=70h, Default=01h) 49
8.6.7 KBC(Keyboard) Interrupt Type (Index=71h, Default=02h) 49
8.6.8 KBC(Keyboard) Special Configuration Register (Index=F0h, Default=48h) 50
8.7 KBC(Mouse) Configuration Registers (LDN=06h) 51
8.7.1 KBC(Mouse) Activate (Index=30h, Default=00h) 51
8.7.2 KBC(Mouse) Interrupt Level Select (Index=70h, Default=0Ch)....51
8.7.3 KBC(Mouse) Interrupt Type (Index=71h, Default=02h)....51
8.7.4 KBC(Mouse) Special Configuration Register (Index=F0h, Default=00h) 51
8.8 GPIO Configuration Registers (LDN=07h)....52
8.8.1 SMI# Normal Run Access Base Address MSB Register (Index=60h, Default=00h)....52
8.8.2 SMI# Normal Run Access Base Address LSB Register (Index=61h, Default=00h)....52
8.8.3 Simple I/O Base Address MSB Register (Index=62h, Default=00h) 52
8.8.4 Simple I/O Base Address LSB Register (Index=63h, Default=00h) 52
8.8.5 Panel Button De-bounce Interrupt Level Select Register (Index=70h, Default=00h)....52
8.8.6 Watch Dog Timer Control Register (Index=71h, Default=00h)....52
8.8.7 Watch Dog Timer Configuration Register (Index=72h, Default=001s0000b) 53
8.8.8 Watch Dog Timer Time-out Value (LSB) Register (Index=73h, Default=38h) 53
8.8.9 Watch Dog Timer Time-out Value (MSB) Register (Index=74h, Default=00h) 53
8.8.10 GPIO Set 1-6 Registers (Index B0h~D4h) 53
8.8.11 Breath LED Control Register 1 (Index=DAh, Default=00h) 54
8.8.12 Breath LED Control Register 2 (Index=DBh, Default=00h) 55
8.8.13 Panel Button De-bounce 0 Input Pin Mapping Register (Index=E0h, Default=00h) 55
8.8.14 Panel Button De-bounce 1 Input Pin Mapping Register (Index=E1h, Default=00h) 55
8.8.15 IRQ External Routing 1-0 Input Pin Mapping Registers (Index=E3h-E2h, Default=00h)....55
8.8.16 IRQ External Routing 1-0 Interrupt Level Selection Registers (Index=E4h, Default=00h)...55
8.8.17 PANSHW# Mask Time Control Register (Index=ECh, Default=00h) 56
8.8.18 SMI# Control Register 1 (Index=F0h, Default=00h) 56
8.8.19 SMI# Control Register 2 (Index=F1h, Default=00h) 56
8.8.20 SMI# Status Register 1 (Index=F2h, Default=00h)....56
8.8.21 SMI# Status Register 2 (Index=F3h, Default=00h)....57
8.8.22 SMI# Pin Mapping Register (Index=F4h, Default=00h)....57
8.8.23 Thermal Output Pin Mapping Register (Index=F5h, Default=00h) 57
8.8.24 Hardware Monitor Alert Beep Pin Mapping Register (Index=F6h, Default=0Eh) 57
8.8.25 Keyboard Lock Pin Mapping Register (Index=F7h, Default=00h) 57
8.8.26 GP LED Blinking 1 Pin Mapping Register (Index=F8h, Default=00h) 58
8.8.27 GP LED Blinking 1 Control Register (Index=F9h, Default=00h)....58
8.8.28 GP LED Blinking 2 Pin Mapping Register (Index=FAh, Default=00h) 58
8.8.29 GP LED Blinking 2 Control Register (Index=FBh, Default=00h) 59
8.9 Consumer IR Configuration Registers (LDN=0Ah) 60
8.9.1 Consumer IR Activate (Index=30h, Default=00h)....60
8.9.2 Consumer IR Base Address MSB Register (Index=60h, Default=03h) 60
8.9.3 Consumer IR Base Address LSB Register (Index=61h, Default=10h) 60
8.9.4 Consumer IR Interrupt Level Select (Index=70h, Default=0Bh)....60
8.9.5 Consumer IR Special Configuration Register (Index=F0h, Default=06h) 60

CONFIDENTIAL

9. Functional Description 63
9.1 LPC Interface 63
9.1.1 LPC Transactions 63
9.2 Clock Tree 64
9.3 Serialized IRQ 65
9.3.1 Continuous Mode 65
9.3.2 Quiet Mode 65
9.3.3 Waveform Samples of SERIRQ Sequence 65
9.3.4 SERIRQ Sampling Slot 66
9.4 General Purpose I/O 67
9.5 Advanced Power Supply Control and Power Management Event (PME#) 69
9.6 Environment Controller 70
9.6.1 Interface 70
9.6.2 Registers 70
9.6.2.1 Address Port (Base+05h, Default=00h) 70
9.6.2.2 General Register Description 76
9.6.2.2.1 Configuration Register (Index=00h, Default=18h) 76
9.6.2.2.2 Interrupt Status Register 1 (Index=01h, Default=00h) 76
9.6.2.2.3 Interrupt Status Register 2 (Index=02h, Default=00h) 76
9.6.2.2.4 Interrupt Status Register 3 (Index=03h, Default=00h) 76
9.6.2.2.5 SMI# Mask Register 1 (Index=04h, Default=00h) 77
9.6.2.2.6 SMI# Mask Register 2 (Index=05h, Default=00h) 77
9.6.2.2.7 SMI# Mask Register 3 (Index=06h, Default=00h) 77
9.6.2.2.8 Interrupt Mask Register 1 (Index=07h, Default=00h) 77
9.6.2.2.9 Interrupt Mask Register 2 (Index=08h, Default=00h) 77
9.6.2.2.10 Interrupt Mask Register 3 (Index=09h, Default=C0h) 77
9.6.2.2.11 Interface Selection Register (Index=0Ah, Default=44h) 78
9.6.2.2.12 General Control Register 1 (Index=0Bh, Default=00h) 78
9.6.2.2.13 General Control Register 2 (Index=0Ch, Default=00h) 79
9.6.2.2.14 Fan Controller Main Control Register (Index=13h, Default=00h) 79
9.6.2.2.15 ADC Temperature Channel Enable Register (Index=51h, Default=00h) 80
9.6.2.2.16 TMPIN3-1 Thermal Output Limit Registers (Index=54h-52h, Default=7Fh) 80
9.6.2.2.17 ADC Temperature Extra Channel Enable Register (Index=55h, Default=40h) 80
9.6.2.2.18 Beep Event Enable Register (Index=5Ch, Default=60h) 81
9.6.2.2.19 Beep Frequency Divisor of Fan Event Register (Index=5Dh, Default=00h) 81
9.6.2.2.20 Beep Frequency Divisor of Voltage Event Register (Index=5Eh, Default=00h) 81
9.6.2.2.21 Beep Frequency Divisor of Temperature Event Register (Index=5Fh, Default=00h) 81
9.6.2.2.22 Vendor ID Register (Index=58h, Default=90h) 81
9.6.2.2.23 Code ID Register (Index=5Bh, Default=12h) 81
9.6.2.3 FAN Controller Register Description 82
9.6.2.3.1 Fan Tachometer 2-5 Reading Registers (Index=0Eh-0Fh, 19h-1Ah, 80h-83h) 82
9.6.2.3.2 Fan Tachometer 2-5 Limit Registers (Index=11h-12h, 1Ch-Dh, 84h-87h) 82
9.6.2.3.3 Fan Tachometer 2-5 Enable Registers 82
9.6.2.3.4 FAN_CTL Control Register (Index=14h, Default=40h) 82
9.6.2.3.5 FAN_CTL 1-6 PWM Control Register (Index=16h,17h, 1Eh,1Fh) 83
9.6.2.3.6 FAN_CTL5-2 SmartGuardian Automatic Mode Smoothing Control

CONFIDENTIAL

Registers 84
9.6.2.3.7 FAN_CTL5-2 SmartGuardian Automatic Mode Temperature Limit of OFF Registers (Index=A0h, 78h, 70h, 68h, Default=7Fh) 84
9.6.2.3.8 FAN_CTL5-2 SmartGuardian Automatic Mode Temperature Limit of Fan Start Registers (Index= A1h, 79h, 71h, 69h, Default=7Fh)..... 84
9.6.2.3.9 FAN_CTL5-2 SmartGuardian Automatic Mode Temperature Limit of Full Speed Registers (Index= A2h, 7Ah, 72h, 6Ah, Default=7Fh) 85
9.6.2.3.10 FAN_CTL5-2 SmartGuardian Automatic Mode Start PWM Registers85 (Index= A3h, 7Bh, 73h, 6Bh, Default=00h/80h)..... 85
9.6.2.3.11 FAN_CTL5-2 SmartGuardian Automatic Mode Control Registers... 85 (Index= A4h, 7Ch, 74h, 6Ch, Default=00h)..... 85
9.6.2.3.12 FAN_CTL5-2 SmartGuardian Automatic Mode △-Temperature Registers 86
(Index= A5h, 7Dh, 75h, 6Dh) 86
9.6.2.3.13 FAN_CTL5-2 Target Zone Registers (Index= A6h, 7Eh, 76h, 6Eh). 86
9.6.2.3.14 FAN_CTL5-2 PWM Duty Reading Registers (Index= A7h, 7Fh, 77h, 6Fh) 86
9.6.2.3.15 Extra Vector Registers..... 87
9.6.2.4 ADC Controller Register Description 88
9.6.2.4.1 VIN5-0 Voltage Reading Registers (Index=25h-20h)..... 88
9.6.2.4.2 ADC Voltage Channel Enable Register (Index=50h, Default=00h) . 88
9.6.2.4.3 VIN High/Low Limit Registers (VINHLR), (Index=30h-3Fh, Default = 00h) 88
9.6.2.5 Temperature Register Description 88
9.6.2.5.1 TMPIN1-6 Reading Registers (Index=29h-2Eh) 88
9.6.2.5.2 TMPIN1-6 High/Low Limit Registers 89
9.6.2.6 External Temperature Sensor Register Description 90
9.6.2.6.1 External Temperature Sensor Host Status Register (Index=88h, Default= -00h) 90
9.6.2.6.2 External Temperature Sensor Host Target Address Register (Index=89h, Default=00h) 90
9.6.2.6.3 External Temperature Sensor Host Write Length Register (Index=8Ah, Default=00h) 90
9.6.2.6.4 External Temperature Sensor Host Read Length Register (Index=8Bh, Default=00h) 91
9.6.2.6.5 External Temperature Sensor Host Command (Write Data 1) Register 91
(Index=8Ch, Default=00h)..... 91
9.6.2.6.6 External Temperature Sensor Write Data (2-8) Register (Index=8Dh, Default=--h) 91
9.6.2.6.7 External Temperature Sensor Host Control Register (Index=8Eh, Default=00h) 91
9.6.2.6.8 External Temperature Sensor Read Data (1-16) Register (Index=8Fh, Default=--h) 92
9.6.2.6.9 PCH/SBTSI Host Status Register (Index=98h, Default=---00000b). 92
9.6.2.6.10 PCH/SBTSI Host Target Address Register (Index=99h, Default=00h)93
9.6.2.6.11 PCH/SBTSI Host Command Register (Index=9Ch, Default=00h) ... 93
9.6.2.6.12 PCH/SBTSI Write Data Register (Index=9Dh, Default=--h)..... 93
9.6.2.6.13 PCH/SBTSI Host Control Register (Index=9Eh, Default=00h)..... 93
9.6.2.6.14 PCH/SBTSI Read Data (1-16) Register (Index=9Fh, Default=--h) .. 94
9.6.2.6.15 SB-TSI Auto-run Control Register (Index=C0h, BANK1, Default=--h)94
9.6.2.6.16 Integer Value of SB-TSI Temperature Reading Register (Index=C1h, Default=--h) 94

CONFIDENTIAL

9.6.2.6.17 Fractional Value of SB-TSI Temperature Reading Register (Index=C2h, Default=--h) 94
9.6.2.6.20 PECI Bridge Write Address Register (BANK2, Index=70h, Default=--h) 96
9.6.2.6.21 PECI Bridge Read Address Register (BANK2, Index=71h, Default=--h) 96
9.6.2.6.22 PECI Bridge Control Register (BANK2, Index=72h, Default=--h) 96
9.6.2.6.23 PECI Bridge Status Register (BANK2, Index=73h, Default=--h) 96
9.6.2.6.24 PECI Bridge Error Code Register (BANK2, Index=74h, Default=--h)96
9.6.2.6.25 PECI Bridge CPU0 Temperature Register (BANK2, Index=75h, Default=--h) 96
9.6.2.6.26 PECI Bridge CPU1 Temperature Register (BANK2, Index=76h, Default=--h) 96
9.6.3 Operation 97
9.6.3.1 Power on Reset and Software Reset 97
9.6.3.2 Starting Conversion 97
9.6.3.3 Voltage and Temperature Inputs 98
9.6.3.4 Layout and Grounding 99
9.6.3.5 Fan Tachometer 99
9.6.3.6 Interrupt of the EC 99
9.6.3.7 FAN Controller 101
9.6.3.7.1 Overview 101
9.6.3.7.2 SmartGuardian - Software Mode 102
9.6.3.7.3 SmartGuardian - Automatic Mode 103
9.6.3.7.4 SmartGuardian - PWM Automatic Mode 104
9.6.3.7.5 SmartGuardian – Closedloop (RPM) Automatic Mode 105
9.6.3.7.6 Extra Vectors 106
9.6.3.7.7 Multi-Curve FAN Control 107
9.6.3.7.8 Multi-Sensor FAN Control 108
9.6.3.7.9 Fan Control Hysteresis 109
9.6.3.7.10 Fan Control Smoothing 110
9.6.3.7.11 FAN Temperature Input 111
9.6.3.8 External Thermal Sensor Programming Procedure 113
9.7 BREATH LED 120
9.8 Serial Port (UART) 121
9.8.1 Data Register 121
9.8.1.1 Receiver Buffer Register (RBR) (Read only, Address offset=0, DLAB=0) 121
9.8.1.2 Transmitter Buffer Register (TBR) (Write only, Address offset=0, DLAB=0) 121
9.8.2 Control Register 122
9.8.2.1 Interrupt Enable Register (IER) (Read/Write, Address offset=1, DLAB=0) 122
9.8.2.2 Interrupt Identification Register (IIR) (Read only, Address offset=2) 122
9.8.2.3 FIFO Control Register (FCR) (Write Only, Address offset=2) 123
9.8.2.4 Divisor Latches (DLL, DLM) (Read/Write, Address offset=0,1 DLAB=0) 124
9.8.2.5 Baud Rate Generator (BRG) 124
9.8.2.6 Scratch Pad Register (Read/Write, Address offset=7) 125
9.8.2.7 Line Control Register (LCR) (Read/Write, Address offset=3) 125
9.8.2.8 Modem Control Register (MCR) (Read/Write, Address offset=4) 126
9.8.3 Status Registers 126
9.8.3.1 Line Status Register (LSR) (Read/Write, Address offset=5) 126
9.8.3.2 Modem Status Register (MSR) (Read/Write, Address offset=6) 127
9.8.4 Reset 128
9.8.5 Programming 128
9.8.6 Software Reset 128
9.8.7 Clock Input Operation 128

CONFIDENTIAL

9.8.8 FIFO Interrupt Mode Operation 128
9.9 Keyboard Controller (KBC) 130
9.9.1 Host Interface 130
9.9.2 Data Registers and Status Register 131
9.9.3 Keyboard and Mouse Interface 131
9.9.4 KIRQ and MIRQ 131
9.10 Consumer Remote Control (TV Remote) IR (CIR) 132
9.10.1 Overview 132
9.10.2 Features 132
9.10.3 Block Diagram 132
9.10.4 Transmit Operation 133
9.10.5 Receive Operation 133
9.10.6 Register Description and Address 133
9.10.6.1 CIR Data Register (DR) 133
9.10.6.2 CIR Interrupt Enable Register (IER) 134
9.10.6.3 CIR Receiver Control Register (RCR) 135
9.10.6.4 CIR Transmitter Control Register 1 (TCR1) 136
9.10.6.5 CIR Transmitter Control Register (TCR2) 137
9.10.6.6 CIR Transmitter Status Register (TSR) 140
9.10.6.7 CIR Receiver FIFO Status Register (RSR) 140
9.10.6.8 CIR Baud Rate Divisor Low Byte Register (BDLR) 140
9.10.6.9 CIR Baud Rate Divisor High Byte Register (BDHR) 141
9.10.6.10 CIR Interrupt Identification Register (IIR) 141
10. DC Electrical Characteristics 143
11. AC Characteristics 147
11.1 Clock Input Timings 147
11.2 LCLK (PCICLK) and LRESET Timings 148
11.3 LPC and SERIRQ Timings 149
11.4 Modem Control Timings 150
11.5 Keyboard/Mouse Receive/Send Data Timings 151
11.6 RSMRST# and ACPI Power Control Signal Timings 152
11.7 PWRGD1, PWRGD2, PWRGD3 Signal Timings 153
11.8 PCIRST#1, PCIRST#2 and PCIRST#3 Signal Timings 155
11.9 Energy-using Product (EuP) Power Control Signal Timings 156
11.10 AMD K8 Power Sequence 157
11.11 DSW Timings 158
12. Package Information 159
13. Ordering Information 161
14. Top Marking Information 163

FIGURES

Figure 4-1. IT8613E 64-LQFP 7
Figure 7-1. IT8613E EUP Applications Circuitry for Intel ICH 28
Figure 7-2. IT8613E DSW Applications Circuitry for Intel CPT/PCH 28
Figure 9-1. Clock Tree 64
Figure 9-2. Start Frame Timing 65
Figure 9-3. Stop Frame Timing 65
Figure 9-4. General Logic of GPIO Function 68
Figure 9-5. Application Example 98
Figure 9-6. Temperature Interrupt Response Diagram 101

CONFIDENTIAL

Figure 9-7. FAN Mode Selection 102
Figure 9-8. Automatic FAN Architecture 103
Figure 9-9. PWM Automatic Mode 104
Figure 9-10. Closed-loop (RPM) Automatic Mode 105
Figure 9-11. Multi-Curve Fan Control 107
Figure 9-12. Multi-Sensor Fan Control 108
Figure 9-13. Fan Control Hysteresis 109
Figure 9-14. Fan Control Smoothing 110
Figure 9-15. FAN Controller Overview 111
Figure 9-16. PECI Programming Procedure 113
Figure 9-17. SST Host Programming Procedure 114
Figure 9-18. SST Slave Programming Procedure 115
Figure 9-19. SMBUS Host Programming Procedure 116
Figure 9-20. SBTSI Host Programming Procedure 117
Figure 9-21. PCH SM-Link Programming Procedure 118
Figure 9-22. DTS Multi-Scan Programming Procedure 119
Figure 9-23. Breath LED Mode Waveform 120
Figure 9-24. Keyboard and Mouse Interface 130
Figure 9-25. CIR Block Diagram 132
Figure 11-1. Clock Input Timings 147
Figure 11-2. LCLK (PCICLK) and LRESET Timings 148
Figure 11-3. LPC and SERIRQ Timings 149
Figure 11-4. Modem Control Timings 150
Figure 11-5. Keyboard/Mouse Receive/Send Data Timings 151
Figure 11-6. RSMRST# Timings 152
Figure 11-7. DPWROK Timings 152
Figure 11-8. ACPI Power Signal Timings 152
Figure 11-9. PWRGD1/2/3 Signal Condition 153
Figure 11-10. PWRGD1/2/3 Signal Timings 154
Figure 11-11. PCIRST#1, PCIRST#2 and PCIRST#3 Signal Timings 155
Figure 11-12. EuP Function Signal Timings 156
Figure 11-13. AMD K8 Power Sequence Timings 157
Figure 11-14. DPWORK Timings 158
Figure 11-15. DSW Timings 158

TABLES

Table 4-1. Pins Listed in Numeric Order 8
Table 5-1. Pin Description of Supplies Signals 9
Table 5-2. Pin Description of LPC Bus Interface Signals 9
Table 5-3. Pin Description of Serial Port 1 Signals 10
Table 5-4. Pin Description of Hardware Monitor Signals 11
Table 5-5. Pin Description of Fan Controller Signals 12
Table 5-6. Pin Description of Keyboard Controller Signals 14
Table 5-7. APC Signals 15
Table 5-8. DSW (Deep Sleep Well) Signals 16

CONFIDENTIAL

Table 5-9. Pin Description of Infrared Port Signals 17
Table 5-10. Pin Description of PECI/SST Controller Signals 17
Table 5-11. Pin Description of PCH & SMBUS_Slave I/F 18
Table 5-12. Pin Description of Miscellaneous Signals 19
Table 6-1. GPIO Alternate Function 23
Table 6-2. GPIO Registers and Power Pads Table 25
Table 7-1. Power On Strapping Options 27
Table 8-1. Global Configuration Registers 31
Table 8-2. Serial Port 1 Configuration Registers 31
Table 8-3. Environment Controller Configuration Registers 32
Table 8-4. KBC(Keyboard) Configuration Registers 32
Table 8-5. KBC(Mouse) Configuration Registers 32
Table 8-6. GPIO Configuration Registers 33
Table 8-7. Consumer IR Configuration Registers 34
Table 8-8. Base Address of Logical Devices 35
Table 8-9 Interrupt Level Mapping Table 60
Table 8-10 Location Mapping Table 61
Table 9-1. Internal clk_in Control Table 64
Table 9-2. Address Map on LPC Bus 70
Table 9-3. Environment Controller Registers (Bank 0) 71
Table 9-4. Environment Controller Registers (Bank 1) 75
Table 9-5. Environment Controller Registers (Bank 2) 75
Table 9-6. FAN_CTL 2-5 PWM Control Register 83
Table 9-7. FAN 2-5 Smoothing Control Registers 84
Table 9-8. Smoothing Frequency Selection Table 84
Table 9-9. FAN Extra-Vector Registers 87
Table 9-10. TMPIN Source Selection Table 88
Table 9-11. TMPIN Source Selection – 1 (TSS1) 89
Table 9-12. TMPIN Source Selection – 2 (TSS2) 89
Table 9-13. Software Mode Control Registers Summary 102
Table 9-14. Automatic FAN Control Registers Summary 103
Table 9-15. FAN Extra-Vector Registers 106
Table 9-16. FAN Hystersis & Smoothing Control Registers Summary 109
Table 9-17. Serial Channel Registers 121
Table 9-18. Interrupt Identification Register 123
Table 9-19. Receiver FIFO Trigger Level Encoding 124
Table 9-20. Baud Rate Using (24 MHz ÷ 13) Clock 124
Table 9-21. Stop Bit Number Encoding 125
Table 9-22. Reset Control of Register and Pinout Signal 128
Table 9-23. Data Register READ/WRITE Controls 130
Table 9-24. Status Register 131
Table 9-25. CIR Register 133
Table 9-26. Modulation Carrier Frequency 138
Table 9-27. Receiver Demodulation Low Frequency (HCFS = 0) 139
Table 9-28. Receiver Demodulation High Frequency (HCFS = 1) 140

CONFIDENTIAL

Table 11-1. Power Sequence AC Timing Parameter 157
Table 11-2. DSW Timings Parameter 158

CONFIDENTIAL

CONFIDENTIAL

1. Features

- **Low Pin Count Interface**
  - Complies with Intel Low Pin Count Interface Specification Rev. 1.1
  - Supports SERIRQ protocol
  - Supports PCI PME# Interface

- **ACPI & LANDesk Compliant**
  - ACPI V. 2.0 compliant
  - Register sets compatible with "Plug and Play ISA Specification V. 1.0a"
  - LANDesk 3.X compliant
  - Supports 6 logical devices

- **Enhanced Hardware Monitor**
  - Built-in 8-bit Analog to Digital Converter
  - 2 thermal inputs from either remote thermal resistor or thermal diode or diode-connected transistor, the temperature sensor of the current mode or PECI
  - 5 voltage monitor inputs (3VSB and VBAT measured internally)
  - Watch Dog comparison of all monitored values
  - SST/PECI/SBTSI/PCH SM-Link I/F supporting external temperature reading for fan control

- **Fan Speed Controller**
  - ProvidesRPM and PWM control
  - Supports 4 programmable Pulse Width Modulation (PWM/RPM) outputs
  - 256 steps of PWM mode
  - Supports High Speed Fan Monitor (Over 16000 RPM)
  - Monitors 4 fan tachometer inputs
  - Supports 8 CPU addresses via PECI Interface
  - Supports thermal data inputs from PCH via SM-Link(Processor Package Temperature, PCH, CPU, MCH, DIMM0~3)
  - Fan Control Soure including thermal resistor, thermal diode, PECI, SST, PCH SM-Link, SBTSI, and virtual sensor

- **SmartGuardian Controller**
  - Provides programmably automatic fan speed control
  - Supports mix-and-match for temperature inputs and fan speed control outputs
  - Overrides fan speed controller during catastrophic situations
  - Provides audible over temperature warning

- **One 16C550 UART**
  - Supports one standard Serial Port
  - RS485 auto flow control
  - Supports UART Port80

- **Consumer Remote Control (TV remote) IR with Power-up Feature**
  - Supports CIR Receive Port

- **Keyboard Controller**
  - 8042 compatible with PS/2 keyboard and mouse
  - Hardware KBC
  - GateA20 and Keyboard reset output
  - Supports Multiple keyboard power-on events (Any Keys, 2-5 Sequential Keys, 1-3 simultaneous Keys)
  - Supports mouse double-click and/or mouse move power on events

- **30 General Purpose I/O Pins**
  - Input mode supports either switch de-bounce or programmable external IRQ input routing
  - Output mode supports 2 sets of programmable LED blinking periods

- **Watch Dog Timer**
  - Time resolution 1 minute or 1 second, maximum 65535 minutes or 65535 seconds
  - Output to KRST# and PWRGD when expired

- **ITE's Innovative Automatic Power-failure Resume and Power Button De-bounce**

- **Eco-design of Energy-using Product (EuP), Extra Low Power S5 Control**

- **Intel DSW Support**

- **AMD CPU Power Sequence Controller**
  - Built-in enhanced voltage comparator

- **Built-in 32.768 kHz Oscillator**

- **3VSB and VBAT Supported**

- **+3.3V Power Supply**

CONFIDENTIAL

- **64-Pin LQFP**
- **RoHS Compliant (100% Green Available)**

CONFIDENTIAL

2. General Description

The IT8613E is a highly integrated Super I/O using the Low Pin Count Interface. It provides the most commonly used legacy Super I/O functionality plus the latest Environment Control initiatives, including H/W Monitor and Fan Speed Controller. The device's LPC interface complies with Intel "LPC Interface Specification Rev. 1.1". The IT8613E is ACPI & LANDesk compliant.

The IT8613E features an enhanced hardware monitor providing two thermal inputs from remote thermal resistors, or thermal diode or diode-connected transistor (2N3904/2N3906). The device employs ITE's innovative intelligent automatic Fan speed control functions (SmartGuardian) to protect the system while reducing the system noise and power consumption. The Fan Speed Controller can control up to four fan speeds through four separate 256 steps of Pulse Width Modulation (PWM) output pins and monitor up to four FANs' Tachometer inputs.

In addition, it features one 16C550 standard compatible enhanced UART performing asynchronous communication, one integrated Keyboard Controller, six GPIO ports controlling up to 30 GPIO pins, which can be individually enabled or disabled via software configuration registers, and IR interface supported.

Regarding eco-design of Energy-using Product (EuP), IT8613E provides not only a solution to reducing power consumption in S5 State but also Keyboard, Mouse, RI# and CIR wakeup events in S3/S5 State.

The IT8613E utilizes power-saving circuitry to reduce power consumption, and once a logical device is disabled, the inputs are inhibited with the clock disabled and the outputs are tri-stated. The device operates with +3.3V power supply. The IT8613E is available in 64-pin LQFP Package.

CONFIDENTIAL

This page is intentionally left blank.

CONFIDENTIAL

3. Block Diagram

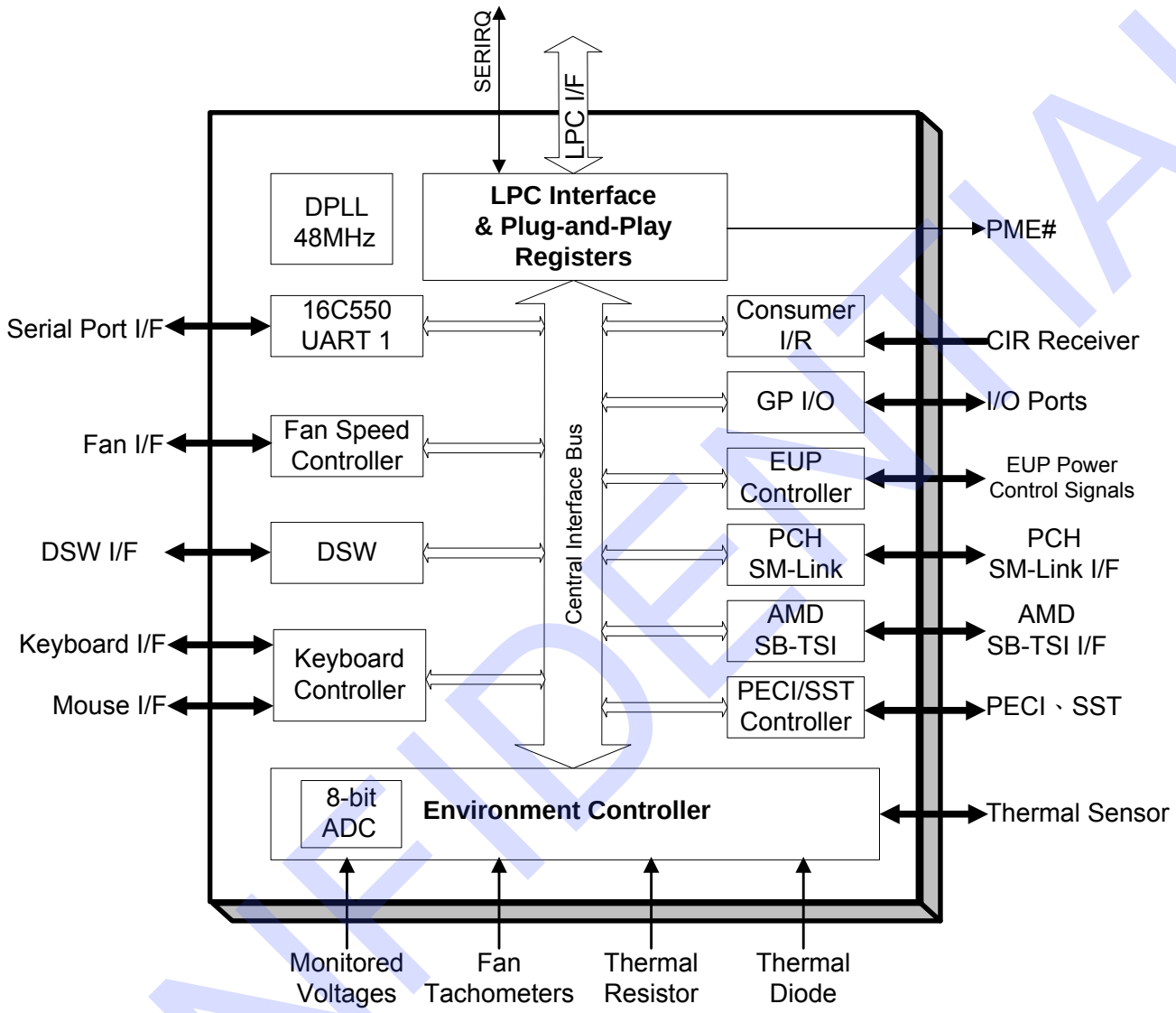

CONFIDENTIAL

This page is intentionally left blank.

CONFIDENTIAL

4. Pin Configuration

Figure 4-1. IT8613E 64-LQFP

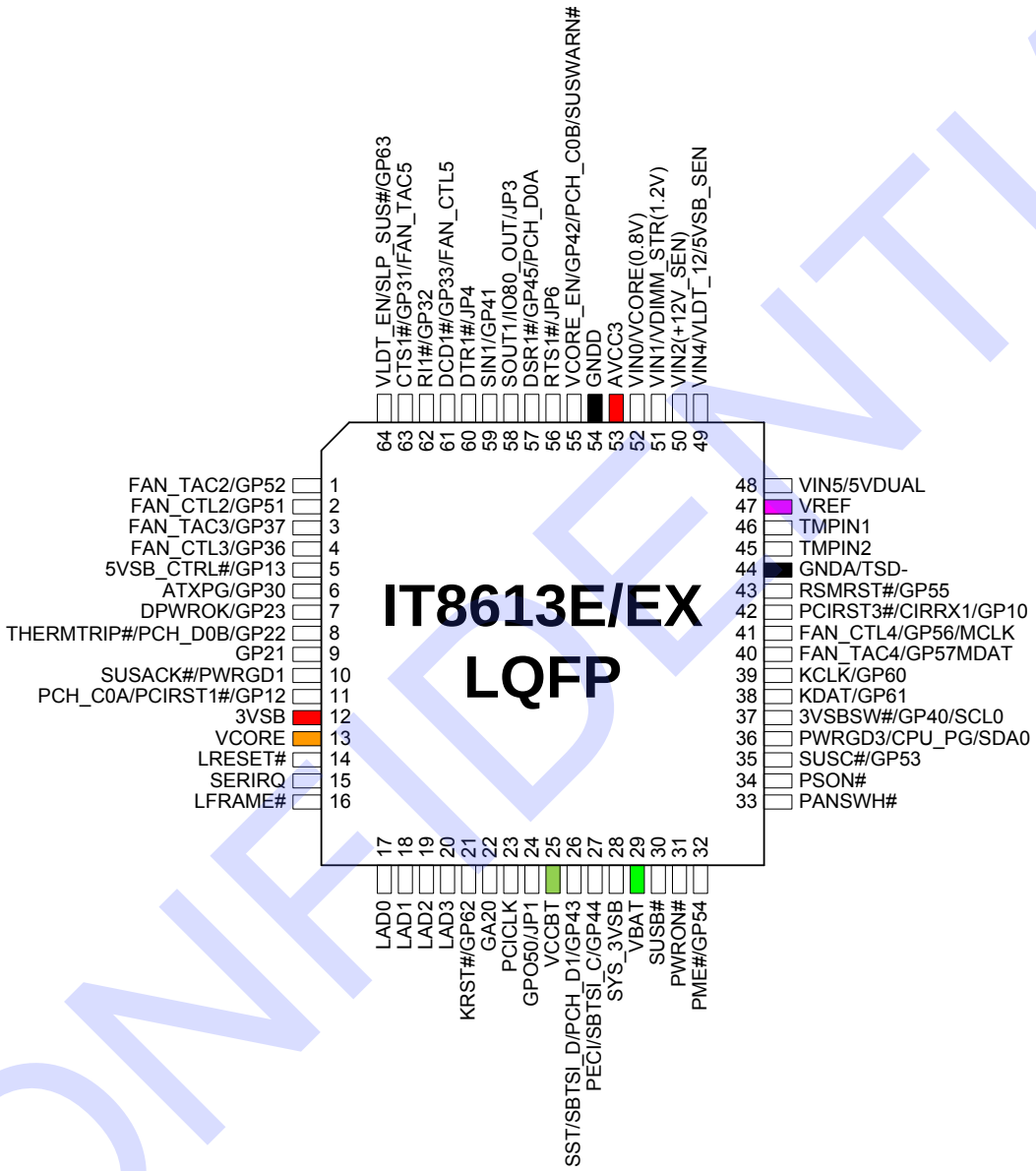

CONFIDENTIAL

Table 4-1. Pins Listed in Numeric Order

Pin	Signal	Pin	Signal	Pin	Signal	Pin	Signal
1	FAN_TAC2/GP52	17	LAD0	33	PANSWH#	49	VIN4/VLDT12/ 5VSB_SEN
2	FAN_CTL2/GP51	18	LAD1	34	PSON#	50	VIN2(+12_SEN)
3	FAN_TAC3/GP37	19	LAD2	35	SUSC# /GP53	51	VIN1/ VDIMM_STR(1.2V)
4	FAN_CTL3/GP36	20	LAD3	36	PWRGD3/CPU_PG/ SDA0	52	VIN0/VCORE(0.8V)
5	5VSB_CTRL#/GP13	21	KRST#/GP62	37	3VSBSW#/GP40/ SCL0	53	AVCC3
6	ATXPG/GP30	22	GA20	38	KDAT/GP61	54	GNDD
7	DPWROK/GP23	23	PCICLK	39	KCLK/GP60	55	VCORE_EN/GP42/ PCH_C0B/ SUSWARN#
8	THERMTRIP#/ PCH_D0B/GP22	24	GPO50/JP1	40	FAN_TAC4/GP57/ MDAT	56	RTS1#/JP6
9	GP21	25	VCCBT	41	FAN_CTL4/GP56/ MCLK	57	DSR1#/GP45/ PCH_D0A
10	SUSACK#/ PWRGD1	26	SST/SBTSI_D/ PCH_D1/GP43	42	PCIRST3#/CIRRX1/ GP10	58	SOUT1/IO80_OUT1/ JP3
11	PCH_C0A/ PCIRST1#/GP12	27	PECI/SBTSI_C/ GP44	43	RSMRST#/GP55	59	SIN1/GP41
12	3VSB	28	SYS_3VSB	44	GNDA/TSD-	60	DTR1#/JP4
13	VCORE	29	VBAT	45	TMPIN2	61	DCD1#/GP33/ FAN_CTL5
14	LRESET#	30	SUSB#	46	TMPIN1	62	RI1#/GP32
15	SERIRQ	31	PWRON#	47	VREF	63	CTS1#/GP31/ FAN_TAC5
16	LFRAME#	32	PME#/GP54	48	VIN5/5VDUAL	64	VLDT_EN/ SLP_SUS#/GP63

CONFIDENTIAL

5. Pin Description

The IT8613E is a 3.3V voltage part. It is just for 3.3V application.

- The I/O buffer output pads are backdrive protected.
- The LPC interface pins are 3.3V only
- The Hardware Monitoring analog pins are 3.3V only. (VIN0~2, 4~5 and TEMPIN1~2 etc.)
- The input voltage for all other pins is 5V tolerance(ex. ATXPG, FAN_TAC etc)
- For DO pins, It is not 5V tolerant and should not be pull-up to 5V
- For GPIO power plan, please refer to Table 6-2. GPIO Registers and Power Pads Table on page 25..

Table 5-1. Pin Description of Supplies Signals

Pin(s) No.	Symbol	Attribute	Power	Description
12	**3VSB**	PWR	-	***+3.3V Standby Power Supply***
53	**AVCC3**	PWR	-	***+3.3V Analog Power Supply***
29	**VBAT**	PWR	-	***+3V Battery Supply***
13	**VCORE**	AO	-	***Internal Power supply(1.8V)*** It is required to connect this pin with the external capacitance.
25	**VCCBT**	PWR	-	***+1.8V Power Supply for SERIQR in Bay Trail Platform***
54	**GNDD**	GND	-	***Digital Ground***
44	**GNDA/TSD-**	GND	-	***Analog Ground***

Table 5-2. Pin Description of LPC Bus Interface Signals

Pin(s) No.	Symbol	Attribute	Power	Description
14	**LRESET#**	DI	AVCC3	***LPC RESET #*** EC block will not be reset by LRESET#, which is controlled by AVCC3 PWRGD.
15	**SERIRQ**	DIO16	AVCC3	***Serial IRQ***
16	**LFRAME#**	DI	AVCC3	***LPC Frame #*** This signal indicates the start of the LPC cycle.
17-20	**LAD[0:3]**	DIO16	AVCC3	***LPC Address / Data 0-3*** 4-bit LPC address/bi-directional data lines. LAD0 is LSB and LAD3 is MSB.
23	**PCICLK**	DI	AVCC3	***PCI Clock*** 33 MHz PCI clock input for LPC I/F and SERIRQ.
32	**PME#**	DOD8	3VSB	***Power Management Event #*** The function of this symbol is Power Management Event #. It supports the PCI PME# interface. This signal allows the peripheral to request the system to wake up from the D3 (cold) state.
	GP54	DIOD8	refer to Table 6-2	***General Purpose I/O 54*** The function of this symbol is General Purpose I/O Port 5 Bit 4.

CONFIDENTIAL

Table 5-3. Pin Description of Serial Port 1 Signals

Pin(s) No.	Symbol	Attribute	Power	Description
63	CTS1#	DI	AVCC3	***Clear to Send 1 #*** When this signal is low, it indicates that the MODEM or data set is ready to accept data. The CTS# signal is a MODEM status input whose condition can be tested by reading the MSR register.
	GP31	DIOD8	refer to Table 6-2	***General Purpose I/O 31*** The function of this symbol is General Purpose I/O Port 3 Bit 1.
	FAN_TAC5	DI	AVCC3	***FAN Tachometer Input 5*** The function of this symbol is Fan Tachometer Input 5. 0 to +5V Amplitude Fan Tachometer Input.
62	RI1#	DI	3VSB	***Ring Indicator 1 #*** When this signal is low, it indicates that a telephone ring signal has been received by the MODEM. The RI# signal is a MODEM status input whose condition can be tested by reading the MSR register.
	GP32	DIOD8	refer to Table 6-2	***General Purpose I/O 32*** The function of this symbol is General Purpose I/O Port 3 Bit 2.
61	DCD1#	DI	AVCC3	***Data Carrier Detect 1 #*** When this signal is low, it indicates that the MODEM or data set has detected a carrier. The DCD# signal is a MODEM status input whose condition can be tested by reading the MSR register.
	GP33	DIOD8	refer to Table 6-2	***General Purpose I/O 33*** The function of this symbol is General Purpose I/O Port 3 Bit 3.
	FAN_CTL5	DOD8	AVCC3	***Fan Control Output 5*** The function of this symbol is Fan Control Output 5. (PWM output signal to Fan's FET.)
60	DTR1#	DO8	AVCC3	***Data Terminal Ready 1 #*** DTR# is used to indicate to the MODEM or data set that the device is ready to exchange data. DTR# is activated by setting the appropriate bit in the MCR register to 1. After a Master Reset operation or during Loop mode, DTR# is set to its inactive state. For the power-on strapping option, please refer to Table 7-1. Power On Strapping Options on page 27.
	JP4	DI	AVCC3	***Power-On Strapping 4*** For the power-on strapping option, please refer to Table 7-1. Power On Strapping Options on page 27.
59	SIN1	DI	AVCC3	***Serial Data Input 1*** This input receives serial data from the communications link.
	GP41	DIOD8	refer to Table 6-2	***General Purpose I/O 41*** The function of this symbol is General Purpose I/O Port 4 Bit 1.

CONFIDENTIAL

Pin(s) No.	Symbol	Attribute	Power	Description
58	IO80_OUT1	DO8	AVCC3	***UART Port 80 Output 1*** The function of this symbol is LPC Port 80 output by SOUT1 in UART protocol.
	SOUT1	DO8	AVCC3	***Serial Data Output 1*** This output sends serial data to the communications link. This signal is set to a marking state (logic 1) after a Master Reset operation or when the device is in one of the Infrared communications modes. For the power-on strapping option, please refer to Table 7-1. Power On Strapping Options on page 27.
	JP3	DI	AVCC3	***Power-On Strapping 3*** For the power-on strapping option, please refer to Table 7-1. Power On Strapping Options on page 27.
57	DSR1#	DI	AVCC3	***Data Set Ready 1 #*** When this signal is low, it indicates that the MODEM or data set is ready to establish a communications link. The DSR# signal is a MODEM status input whose condition can be tested by reading the MSR register.
	GP45	DIOD8	refer to Table 6-2	***General Purpose I/O 45*** The function of this symbol is General Purpose I/O Port 4 Bit 5.
	PCH_D0A	DIOD8	AVCC3	***PCH SM-Link Set 0A Data Pin*** The function of this symbol is PCH SM-Link Data.
56	RTS1#	DO8	AVCC3	***Request to Send 1 #*** When this signal is low, the output indicates to the MODEM or data set that the device is ready to send data. RTS# is activated by setting the appropriate bit in the MCR register to 1. After a Master Reset operation or during Loop mode, RTS# is set to its inactive state. For the power-on strapping option, please refer to Table 7-1. Power On Strapping Options on page 27.
	JP6	DI	3VSB	***Power-On Strapping 6*** For the power-on strapping option, please refer to Table 7-1. Power On Strapping Options on page 27.

Table 5-4. Pin Description of Hardware Monitor Signals

Pin(s) No.	Symbol	Attribute	Power	Description
52	VIN0	AI	AVCC3	***Voltage Analog Input 0*** The function of this symbol is 0 to 2.8V FSR Analog Input.
51	VIN1	AI	AVCC3	***Voltage Analog Input 1*** The function of this symbol is 0 to 2.8V FSR Analog Input.
50	VIN2 (+12V_SEN)	AI	AVCC3	***Voltage Analog Input 2 (+12V power detector)*** The function of this symbol is 0 to 2.8V FSR Analog Input. Besides, it is the power detector for PWRGD3. Please refer to section 11.7 PWRGD1, PWRGD2, PWRGD3 on page 153 for the detail.

CONFIDENTIAL

Pin(s) No.	Symbol	Attribute	Power	Description
49	VIN4	AI	AVCC3	***Voltage Analog Input 4*** The function of this symbol is 0 to 2.8V FSR Analog Input.
	VLDT_12	AI	AVCC3	***VLDT (1.2V) Analog Inputs*** The function of this symbol is VLDT (1.2V) Analog Input. The function configuration of this pin is determined by the power-on strapping option (JP4).
	5VSB_SEN	AI	3VSB	***Systme 5VSB Monitor*** The function of this symbol is Analog Input for System 5VSB Monitor. When the voltage drops below 1.5V(typical), the monitor circuit will assert DPWROK. The function configuration of this pin is determined by the JP1=0 and LDN04h\FAh[bit5].=1
48	VIN5	AI	AVCC3	***Voltage Analog Input 5*** The function of this symbol is 0 to 2.8V FSR Analog Input.
	5VDUAL	AI	3VSB	***Systme 5VDUAL Monitor*** The function of this symbol is analog input for system 5VDUAL monitor. When the voltage drops below 0.7V, the 5VDUAL monitor circuit will assert SUSACK#. The function configuration of this pin is determined by the power-on strapping option (JP1=0).
47	VREF	AO	AVCC3	***Reference Voltage Output (2.8V)*** Regulated and referred voltage for external temperature sensors and negative voltage monitors.
46-45	TMPIN[1:2]	AI	AVCC3	***External Thermal Inputs [1:2]*** These pins are connected to thermistors [1:2] or thermal temperature sensors.
44	GNDA/TSD-	GND	-	***Thermal Diode Negative Input***

Table 5-5. Pin Description of Fan Controller Signals

Pin(s) No.	Symbol	Attribute	Power	Description
2	FAN_CTL2	DOD8	AVCC3	***Fan Control Output 2*** The function of this symbol is Fan Control Output 2. (PWM output signal to Fan's FET.)
	GP51	DIOD8	refer to Table 6-2	***General Purpose I/O 51*** The function of this symbol is General Purpose I/O Port 5 Bit 1.
1	FAN_TAC2	DI	AVCC3	***Fan Tachometer Input 2*** The function of this symbol is Fan Tachometer Input 2, 0 to +5V Amplitude Fan Tachometer Input..
	GP52	DIOD8	refer to Table 6-2	***General Purpose I/O 52*** The function of this symbol is General Purpose I/O Port 5 Bit 2.
4	FAN_CTL3	DOD8	AVCC3	***Fan Control Output 3*** The function of this symbol is Fan Control Output 3. (PWM output signal to Fan's FET.)
	GP36	DIOD8	refer to Table 6-2	***General Purpose I/O 36*** The function of this symbol is General Purpose I/O Port 3 Bit 6.
3	FAN_TAC3	DI	AVCC3	***Fan Tachometer Input 3*** The function of this symbol is Fan Tachometer Input 3, 0 to +5V Amplitude Fan Tachometer Input.
	GP37	DIOD8	refer to Table 6-2	***General Purpose I/O 37*** The function of this symbol is General Purpose I/O Port 3 Bit 7.

CONFIDENTIAL

Pin(s) No.	Symbol	Attribute	Power	Description
41	**FAN_CTL4**	DOD8	AVCC3	***Fan Control Output 4*** The function of this symbol is Fan Control Output 4. (PWM output signal to Fan's FET.)
	GP56	DIOD24	refer to Table 6-2	***General Purpose I/O 56*** The function of this symbol is General Purpose I/O Port 5 Bit 6.
	MCLK	DIOD24	3VSB	***PS/2 Mouse Clock*** The function of this symbol is PS/2 Mouse Clock.
40	**FAN_TAC4**	DI	AVCC3	***Fan Tachometer Input 4*** The function of this symbol is Fan Tachometer Input 4, 0 to +5V Amplitude Fan Tachometer Input.
	GP57	DIOD24	refer to Table 6-2	***General Purpose I/O 57*** The function of this symbol is General Purpose I/O Port 5 Bit 7.
	MDAT	DIOD24	3VSB	***PS/2 Mouse Data*** The function of this symbol is PS/2 Mouse Data.
61	**DCD1#**	DI	AVCC3	***Data Carrier Detect 1 #*** When this signal is low, it indicates that the MODEM or data set has detected a carrier. The DCD# signal is a MODEM status input whose condition can be tested by reading the MSR register.
	GP33	DIOD8	refer to Table 6-2	***General Purpose I/O 33*** The function of this symbol is General Purpose I/O Port 3 Bit 3.
	FAN_CTL5	DOD8	AVCC3	***Fan Control Output 5*** The function of this symbol is Fan Control Output 5. (PWM output signal to Fan's FET.)
63	**CTS1#**	DI	AVCC3	***Clear to Send 1 #*** When this signal is low, it indicates that the MODEM or data set is ready to accept data. The CTS# signal is a MODEM status input whose condition can be tested by reading the MSR register.
	GP31	DIOD8	refer to Table 6-2	***General Purpose I/O 31*** The function of this symbol is General Purpose I/O Port 3 Bit 1.
	FAN_TAC5	DI	AVCC3	***FAN Tachometer Input 5*** The function of this symbol is Fan Tachometer Input 5. 0 to +5V Amplitude Fan Tachometer Input..

*Note1: Please refer to Table 6-2. GPIO Registers and Power Pads Table for the detail.

CONFIDENTIAL

Table 5-6. Pin Description of Keyboard Controller Signals

Pin(s) No.	Symbol	Attribute	Power	Description
38	KDAT	DIOD24	3VSB	***Keyboard Data*** The function of this symbol is Keyboard Data.
	GP61	DIOD24	refer to Table 6-2	***General Purpose I/O 61*** The function of this symbol is General Purpose I/O Port 6 Bit 1. This set supports Simple I/O function only. This pin doesn't support internal pull-up.
39	KCLK	DIOD24	3VSB	***Keyboard Clock*** The function of this symbol is Keyboard Clock.
	GP60	DIOD24	refer to Table 6-2	***General Purpose I/O 60*** The function of this symbol is General Purpose I/O Port 6 Bit 0. This set supports Simple I/O function only. This pin doesn't support internal pull-up.
40	FAN_TAC4	DI	AVCC3	***Fan Tachometer Input 4*** The function of this symbol is Fan Tachometer Input 4, 0 to +5V Amplitude Fan Tachometer Input.
	GP57	DIOD24	refer to Table 6-2	***General Purpose I/O 57*** The function of this symbol is General Purpose I/O Port 5 Bit 7.
	MDAT	DIOD24	3VSB	***PS/2 Mouse Data*** The function of this symbol is PS/2 Mouse Data.
41	FAN_CTL4	DOD8	AVCC3	***Fan Control Output 4*** The function of this symbol is Fan Control Output 4. (PWM output signal to Fan's FET.)
	GP56	DIOD24	refer to Table 6-2	***General Purpose I/O 56*** The function of this symbol is General Purpose I/O Port 5 Bit 6.
	MCLK	DIOD24	3VSB	***PS/2 Mouse Clock*** The function of this symbol is PS/2 Mouse Clock.
21	KRST#	DO8	AVCC3	***Keyboard Reset #*** The function of this symbol is Keyboard Reset #.
	GP62	DIOD8	refer to Table 6-2	***General Purpose I/O 62*** The function of this symbol is General Purpose I/O Port 6 Bit 2. This set supports Simple I/O function only.
22	GA20	DO8	AVCC3	***Gate Address 20***

*Note1: Please refer to Table 6-2. GPIO Registers and Power Pads Table

CONFIDENTIAL

Table 5-7. APC Signals

Pin(s) No.	Symbol	Attribute	Power	Description
43	**RSMRST#**	DOD8	3VSB	***Resume Reset #*** The function of this symbol is Resume Reset #. It is a power good signal of SYS_3VSB.
	GP55	DIOD8	refer to Table 6-2	***General Purpose I/O 55*** The function of this symbol is General Purpose I/O Port 5 Bit 5.
28	**SYS_3VSB**	AI	3VSB	***System 3.3V Standby Power Detector*** The function of this symbol is System Standby Power Detector for RSMRST# output and EuP signal Control. Please refer to Table 7-1. Power On Strapping Options on page 27, Figure 7-1. IT8613E EUP Applications Circuitry for Intel ICH on page 28, section 11.9 Energy-using Product (EuP) Power Control Signal Timings on page 156.
31	**PWRON#**	DOD8	3VSB	***Power On Request Output #*** The function of this symbol is Power On Request Output #.
33	**PANSWH#**	DI	3VSB	***Main Power Switch Button Input #*** The function of this symbol is Main Power Switch Button Input #.
34	**PSON#**	DOD8	3VSB	***Power Supply On-Off Output #*** The function of this symbol is Power Supply On-Off Control Output #. This pin is internally pulled up to 3VSB. If PSON# pin is not used for the control of the power supply and VCCOK_SEL=1(GBL\Index 23[bit-6]=1), it is necessary to pull it down to the GND.
30	**SUSB#**	DI or DI-L	3VSB	***SUSB # Input*** The function of this symbol is SUSB# Input.
35	**SUSC#**	DI or DI-L	3VSB	***SUSC# Input*** The function of this symbol is SUSC# Input.
	GP53	DIOD8	refer to Table 6-2	***General Purpose I/O 53*** The function of this symbol is General Purpose I/O Port 5 Bit 3.
6	**ATXPG**	DI	AVCC3	***ATX Power Good*** The function of this symbol is ATX Power Good. For PWRGD1/2/3 signal, it is (AVCC3 power-level-detect **AND** SUSB# **AND** VIN2(+12V_SEN) **AND** ATXPG). Please refer to section 11.7 PWRGD1, PWRGD2, PWRGD3 on page 153 for the detail.
	GP30	DIOD8	refer to Table 6-2	***General Purpose I/O 30*** The function of this symbol is General Purpose I/O Port 3 Bit 0.

CONFIDENTIAL

Pin(s) No.	Symbol	Attribute	Power	Description
36	**PWRGD3**	DOD8	3VSB	***Power Good Output 3 with 150ms Delay Time*** The function of this symbol is Power Good Output 3. For PWRGD1/2/3 signal, it is (AVCC3 power-level-detect **AND** SUSB# **AND** VIN2(+12V_SEN) **AND** ATXPG). Please refer to section 11.7 PWRGD1, PWRGD2, PWRGD3 on page 153 for the detail.
	CPU_PG	DOD8	AVCC3	***CPU Power-good*** The function of this symbol is to indicate that CPU power-good is ready. The external pull-high resistor is required. The function configuration of this pin is determined by the power-on strapping option (JP4).
	SDA0	DIOD8	AVCC3	***SMBUS Slave 0 - Data Pin*** The function of this symbol is data pin of SMBUS slave set 0. Please refer to section 8.5.10 for the detail.

Table 5-8. DSW (Deep Sleep Well) Signals

Pin(s) No.	Symbol	Attribute	Power	Description
64	**VLDT_EN**	DOD8	AVCC3	***VLDT Enable*** The function of this symbol is to enable VLDT Voltage. The external pull-high resistor is required. The function configuration of this pin is determined by the power-on strapping option (JP4).
	SLP_SUS#	DI	3VSB	***Deep Sleep Indication*** From CPT PCH, when asserted low, this signal indicates PCH is in the deep sleep state. The function configuration of this pin is determined by the power-on strapping option (JP1=0).
	GP63	DIOD8	refer to Table 6-2	***General Purpose I/O 63*** The function of this symbol is General Purpose I/O Port 6 Bit 3.
7	**DPWROK**	DOD8	3VSB	***3VSB Power OK Output*** The function of this symbol is 3VSB Power OK Output. The function configuration of this pin is determined by the power-on strapping option (JP1=0).
	GP23	DIOD8	refer to Table 6-2	***General Purpose I/O 23*** The function of this symbol is General Purpose I/O Port 2 Bit 3.
10	**SUSACK#**	DOD8	3VSB	***SUSACK#*** The function of this symbol is SUSACK# Output. When 5VDUAL pin drops below 0.7V, SIO will issue SUSACK# to PCH. The function configuration of this pin is determined by the power-on strapping option (JP1=0).
	PWRGD1	DOD8	AVCC3	***Power Good Output 1 with 30ms Delay Time*** The function of this symbol is Power Good Output 1. For PWRGD1/2/3 signal, it is (AVCC3 power-level-detect **AND** SUSB# **AND** VIN2(+12V_SEN) **AND** VIN3(+5V_SEN) **AND** ATXPG). Please refer to section 11.7 PWRGD1, PWRGD2, PWRGD3 on page 153 for the detail.

CONFIDENTIAL

Pin(s) No.	Symbol	Attribute	Power	Description
55	VCORE_EN	DOD8	AVCC3	***VCORE Enable*** The function of this symbol is VCORE Enable, which is to enable the PWM controller for CPU core voltage. The external pull-high resistor is required. The function configuration of this pin is determined by the power-on strapping option (JP4).
	GP42	DIOD8	refer to Table 6-2	***General Purpose I/O 42*** The function of this symbol is General Purpose I/O Port 4 Bit 2.
	PCH_C0B	DIOD8	AVCC3	***PCH SM-Link Set 0B Clock Pin*** The function of this symbol is PCH SM-Link Clock.
	SUSWARN#	DI	3VSB	***SUSWARN#*** The function of this symbol is a signal from CPT PCH. When this signal is low, it indicates PCH is in the deep sleep state. The function configuration of this pin is determined by the power-on strapping option (JP1=0).
48	VIN5	AI	AVCC3	***Voltage Analog Input 5*** The function of this symbol is 0 to 2.8V FSR Analog Input.
	5VDUAL	AI	3VSB	***Systme 5VDUAL Monitor*** The function of this symbol is Analog Input for System 5VDUAL Monitor. When the voltage drops below 0.7V, the 5VDUAL monitor circuit will assert SUSACK#. The function configuration of this pin is determined by the power-on strapping option (JP1=0).

Table 5-9. Pin Description of Infrared Port Signals

Pin(s) No.	Symbol	Attribute	Power	Description
42	PCIRST3#	DOD8	3VSB	***PCI Reset 3 #*** The function of this symbol is PCI Reset 3 #, which is a buffer of LRESET#.
	CIRRX1	DI	3VSB	***Consumer Infrared Receive Input 1*** The function of this symbol is Consumer Infrared Transmit Input 1.
	GP10	DIOD8	refer to Table 6-2	***General Purpose I/O 10*** The function of this symbol is General Purpose I/O Port 1 Bit 0.

Table 5-10. Pin Description of PECI/SST Controller Signals

Pin(s) No.	Symbol	Attribute	Power	Description
26	SST	SST	AVCC3	***SST*** The function of this symbol is SST. Specifically when External Thermal Sensor Host (SST, PECI, SBTSI, PCH SM-Link) is enabled (bit 6-4 of EC Index 0Ah), The function of this symbol is selected as SST or ETS_DAT.
	SBTSI_D	DIOD24	AVCC3	***SBTSI I/F Data Pin*** The function of this symbol is SBTSI I/F Data.
	PCH_D1	DIOD24	AVCC3	***PCH SM-Link Set 1 Data Pin*** The function of this symbol is PCH SM-Link Data.
	GP43	DIOD24	refer to Table 6-2	***General Purpose I/O 43*** The function of this symbol is General Purpose I/O Port 4 Bit 3.

CONFIDENTIAL

Pin(s) No.	Symbol	Attribute	Power	Description
27	**PECI**	PECI	AVCC3	***PECI (for 1.05V I/F)*** The function of this symbol is PECI. Specifically when External Thermal Sensor Host (SST, PECI, SBTSI, PCH SM-Link) is enabled (bit 6-4 of EC Index 0Ah), this pin is selected as PECI or ETS_CLK.
	SBTSI_C	DIOD24	AVCC3	***SBTSI I/F Clock Pin*** The function of this symbol is AMD SB-TSI I/F Clock.
	GP44	DIOD24	refer to Table 6-2	***General Purpose I/O 44*** The function of this symbol is General Purpose I/O Port 4 Bit 4.

Table 5-11. Pin Description of PCH & SMBUS_Slave I/F

Pin(s) No.	Symbol	Attribute	Power	Description
11	**PCH_C0A**	DIOD8	AVCC3	***PCH SM-Link Set 0 Clock Pin*** The function of this symbol is PCH SM-Link Clock.
	PCIRST1#	DO8	AVCC3	***PCI Reset 1 #*** The function of this symbol is PCI Reset 1 #, which is a buffer of LRESET#.
	GP12	DIOD8	refer to Table 6-2	***General Purpose I/O 12*** The function of this symbol is General Purpose I/O Port 1 Bit2.
55	**VCORE_EN**	DOD8	AVCC3	***VCORE Enable*** The function of this symbol is VCORE Enable, which is to enable the PWM controller for CPU core voltage. The external pull-high resistor is required. The function configuration of this pin is determined by the power-on strapping option (JP4).The external pull-high resistor
	GP42	DIOD8	refer to Table 6-2	***General Purpose I/O 42*** The function of this symbol is General Purpose I/O Port 4 Bit 2.
	PCH_C0B	DIOD8	AVCC3	***PCH SM-Link Clock Pin 0B*** The function of this symbol is PCH SM-Link Clock.
	SUSWARN#	DIDIOD8	3VSB	***SUSWARN#*** The function of this symbol is a signal from CPT PCH. When this signal is low, it indicates PCH is in the deep sleep state. The function configuration of this pin is determined by the power-on strapping option (JP1=0).
57	**DSR1#**	DI	AVCC3	***Data Set Ready 1 #*** When this signal is low, it indicates that the MODEM or data set is ready to establish a communications link. The DSR# signal is a MODEM status input whose condition can be tested by reading the MSR register.
	GP45	DIOD8	refer to Table 6-2	***General Purpose I/O 45*** The function of this symbol is General Purpose I/O Port 4 Bit 5.
	PCH_D0A	DOD8	AVCC3	***PCH SM-Link Data 0A Pin*** The function of this symbol is PCH SM-Link Data.

CONFIDENTIAL

Pin(s) No.	Symbol	Attribute	Power	Description
8	THERMTRIP#	DI	AVCC3	***THERMTRIP# Input*** The function of this symbol is for the connection to the Apollo Lake THERMTRIP# pin.
	PCH_D0B	DOD8	AVCC3	***PCH SM-Link Data 0B Pin*** The function of this symbol is PCH SM-Link Data.
	GP22	DIOD8	refer to Table 6-2	***General Purpose I/O 22*** The function of this symbol is General Purpose I/O Port 2 Bit 2.
36	PWRGD3	DOD8	AVCC3	***Power Good Output 3 with 150ms Delay Time*** The function of this symbol is Power Good Output 3. For PWRGD1/2/3 signal, it is (AVCC3 power-level-detect **AND** SUSB# **AND** VIN2(+12V_SEN) **AND** ATXPG). Please refer to section 11.7 PWRGD1, PWRGD2, PWRGD3 on page 153 for the detail.
	CPU_PG	DOD8	AVCC3	***CPU Power-good*** The function of this symbol is to indicate that CPU power-good is ready. The external pull-high resistor is required. The function configuration of this pin is determined by the power-on strapping option (JP4).
	SDA0	DIOD8	AVCC3	***SMBUS Slave 0 - Data Pin*** The function of this symbol is data pin of SMBUS slave set 0. Please refer to section 8.5.10 for the detail.
37	3VSBSW#	DO8	3VSB	***3VSBSW#*** The function of this symbol is 3VSBSW#.
	GP40	DIOD8	refer to Table 6-2	***General Purpose I/O 40*** The function of this symbol is General Purpose I/O Port 4 Bit 0.
	SCL0	DIOD8	AVCC3	***SMBUS Slave 0 - Clock Pin*** The function of this symbol is clock pin of SMBUS slave set 0. Please refer to section 8.5.10 for the detail.

Table 5-12. Pin Description of Miscellaneous Signals

Pin(s) No.	Symbol	Attribute	Power	Description
55	VCORE_EN	DOD8	AVCC3	***VCORE Enable*** The function of this symbol is VCORE Enable, which is to enable the PWM controller for CPU core voltage. The external pull-high resistor is required. The function configuration of this pin is determined by the power-on strapping option (JP4).The external pull-high resistor
	GP42	DIOD8	refer to Table 6-2	***General Purpose I/O 42*** The function of this symbol is General Purpose I/O Port 4 Bit 2.
	PCH_C0B	DIOD8	AVCC3	***PCH SM-Link Clock Pin 0B*** The function of this symbol is PCH SM-Link Clock.
	SUSWARN#	DIDIOD8	3VSB	***SUSWARN#*** The function of this symbol is a signal form CPT PCH. When this signal is low, it indicates PCH is in the deep sleep state. The function configuration of this pin is determined by the power-on strapping option (JP1=0).

CONFIDENTIAL

Pin(s) No.	Symbol	Attribute	Power	Description
11	**PCIRST1#**	DO8	AVCC3	***PCI Reset 1 #*** The function of this symbol is PCI Reset 1 #, which is a buffer of LRESET#.
	PCH_C0A	DIOD8	AVCC3	***PCH SM-Link Clock Pin 0a*** The function of this symbol is PCH SM-Link Clock.
	GP12	DIOD8	refer to Table 6-2	***General Purpose I/O 12*** The function of this symbol is General Purpose I/O Port 1 Bit 2.
42	**PCIRST3#**	DOD8	AVCC3	***PCI Reset 3 #*** The function of this symbol is PCI Reset 3 #, which is a buffer of LRESET#.
	CIRRX1	DI	3VSB	***Consumer Infrared Receive Input 1*** The function of this symbol is Consumer Infrared Transmit Input 1.
	GP10	DIOD8	refer to Table 6-2	***General Purpose I/O 10*** The function of this symbol is General Purpose I/O Port 1 Bit 0.
5	**5VSB_CTRL#**	DOD8	3VSB	***5VSB_CTRL# Power Control Signal*** Please refer to section 11.9 Energy-using Product (EuP) Power Control Signal Timings on page 156 for the detail.
	GP13	DO8	refer to Table 6-2	***General Purpose I/O Output 13*** The function of this symbol is General Purpose I/O Port 1 Bit 3.
8	**PCH_D0B**	DOD8	AVCC3	***PCH SM-Link Data 0B Pin*** The function of this symbol is PCH SM-Link Data.
	GP22	DO8	refer to Table 6-2	***General Purpose I/O Output 22*** The function of this symbol is General Purpose I/O Port 2 Bit 2.
9	**GP21**	DIOD8	refer to Table 6-2	***General Purpose I/O 21*** The function of this symbol is General Purpose I/O Port 2 Bit 1.

CONFIDENTIAL

IO Cell:
DO8: 8mA Digital Output buffer
DOD8: 8mA Digital Open-Drain Output buffer
DO16: 16mA Digital Output buffer
DO24: 24mA Digital Output buffer
DO24L: 24mA sink/8mA drive Digital Output buffer

DIO8: 8mA Digital Input/Output buffer
DIOD8: 8mA Digital Open-Drain Input/Output buffer
DIOD8-L: 8mA Digital Open-Drain Input/Output buffer for 1.8V I/F
DIO16: 16mA Digital Input/Output buffer
DIOD16: 16mA Digital Open-Drain Input/Output buffer
DIO24: 24mA Digital Input/Output buffer
DIOD24: 24mA Digital Open-Drain Input/Output buffer

DI: Digital Input
DI-L: Digital Input for 1.8V I/F
AI: Analog Input
AO: Analog Output

SST: Special design for SST interface
PECI: Special design for PECI interface
IO_SW: Special type of Input/Output; pins of this type connected in pairs through a switch

CONFIDENTIAL

This page is intentionally left blank.

CONFIDENTIAL

6. List of GPIO Pins

Table 6-1. GPIO Alternate Function

Group	Bit	Pin Loc.	1st Func	Condition	2nd Func	Condition	3rd Func	Condition	4th Func	Condition	5th Func	Condition
GPIO 1x	0	42	PCIRST3# (DOD8)		CIRRX1 (DI)	25h<0>=0 CIR enable	GP10 (DIOD8)	25h<0>=1				
	2	11	PCIRST1#		PCH_C0A (DIOD8)	2Ah<6>=1	GP12 (DIOD8)	25h<2>=1				
	3	5	5VSB_CTRL# (DOD8)	JP1=1	GP13 (DIOD8)	25h<3>=1						
GPIO 2x	1	9	GP21 (DIOD8)	26h<1>=1								
	2	8	GP22 (DIOD8)	26h<2>=1	PCH_D0B(DIOD8)	2Bh<5>=0						
	3	7	GP23 (DIOD8)	26h<3>=1								
GPIO 3x	0	6	ATXPG (DI)	27h<0>=0	GP30 (DIOD8)	27h<0>=1						
	1	63	CTS1# (DI)	27h<1>=0 LDN1 enable	GP31 (DIOD8)	27h<1>=1	FAN_TAC5	27h<1>=1 LDN1 disable				
	2	62	RI1# (DI)	27h<2>=0 LDN1 enable	GP32 (DIOD8)	27h<2>=1						
	3	61	DCD1# (DI)	27h<3>=0 LDN1 enable	GP33 (DIOD8)	27h<3>=1	FAN_CTL5	27h<3>=0 LDN1 disable				
	6	4	FAN_CTL3 (DOD8)	27h<6>=0	GP36 (DIOD8)	27h<6>=1						
	7	3	FAN_TAC3 (DI)	27h<7>=0	GP37 (DIOD8)	27h<7>=1						

CONFIDENTIAL

Group	Bit	Pin Loc.	1st Func	Condition	2nd Func	Condition	3rd Func	Condition	4th Func	Condition	5th Func	Condition
GPIO 4x	0	37	3VSBSW# (DO8)	2Ah<7>=1 28h<0>=0	GP40 (DIOD8)	28h<0>=1	SCL0 (DIOD8)	LDN4 F3h<1>=1				
	1	59	SIN1 (DI)	28h<1>=0 LDN1 enable	GP41 (DIOD8)	28h<1>=1						
	2	55	VCORE_EN	JP4=0	GP42 (DIOD8)	28h<2>=1	PCH C0B (DIOD8)	PCH Enable 2Ah<6>=0	SUSWARN # (DI)	JP1=0		
	3	26	Ext. Sensor	EC 0Ah<6-4>	PCH_D1	2Ah<3>=1	GP43 (DIOD8)	28h<3>=1				
	4	27	Ext. Sensor	EC 0Ah<6-4>	GP44 (DIOD8)	28h<4>=1						
	5	57	DSR1# (DI)		GP45 (DIOD8)	28h<5>=1	PCH_D0A	2Bh<5>=1				
GPIO 5x	0	24	GPO50 (DO8)	29h<0>=1								
	1	2	FAN_CTL2 (DOD8)	29h<1>=0	GP51 (DIOD8)	29h<1>=1						
	2	1	FAN_TAC2 (DI)	29h<2>=0	GP52 (DIOD8)	29h<2>=1						
	3	35	SUSC# (DI)	29h<3>=0	GP53 (DIOD8)	29h<3>=1						
	4	32	PME# (DOD8)	29h<4>=0	GP54 (DIOD8)	29h<4>=1						
	5	43	RSMRST# (DOD8)	29h<5>=0	GP55 (DIOD8)	29h<5>=1						
	6	41	FAN_CTL4	2Ah<0>=1	GP56 (DIOD24)	29h<7>=1	MCLK (DIOD24)	29h<7>=0				
	7	40	FAN_TAC4	2Ah<0>=1	GP57 (DIOD24)	29h<7>=1	MDAT (DIOD24)	29h<7>=0				
GPIO 6x	0	39	KCLK (DIOD24)	29h<6>=0	GP60 (DIOD24)	29h<6>=1						
	1	38	KDAT (DIOD24)	29h<6>=0	GP61 (DIOD24)	29h<6>=1						
	2	21	KRST# (DO8)	29h<6>=0	GP62 (DIOD16)	29h<6>=1						
	3	64	SLP_SUS# (DI)	JP1=0	GP63 (DIOD8)							

CONFIDENTIAL

Table 6-2. GPIO Registers and Power Pads Table

S: Register kept by 3VSB
- : Register kept by AVCC3
X: Not supported by this chip
O: GPIO control in S3/S5 supported

GP I/O Group 1		GPIO10	GPIO11	GPIO12	GPIO13	GPIO14	GPIO15	GPIO16	GPIO17
GPIO Control in S3/S5		O	X	X	X	X	X	X	X
Multi-pin selection	(Index 25h)	S	X	-	-	X	X	X	X
Pin polarity	(Index B0h)	-	X	-	-	X	X	X	X
Internal pull-up enable	(Index B8h)	S	X	S	S	X	X	X	X
Simple I/O enable	(Index C0h)	S	X	-	-	X	X	X	X
Output/Input selection	(Index C8h)	S	X	-	-	X	X	X	X
GP I/O Group 2		**GPIO20**	**GPIO21**	**GPIO22**	**GPIO23**	**GPIO24**	**GPIO25**	**GPIO26**	**GPIO27**
GPIO Control in S3/S5		X	O	O	O	X	X	X	X
Multi-pin selection	(Index 26h)	X	S	S	S	X	X	X	X
Pin polarity	(Index B1h)	X	S	S	S	X	X	X	X
Internal pull-up enable	(Index B9h)	X	X	X	X	X	X	X	X
Simple I/O enable	(Index C1h)	X	S	S	S	X	X	X	X
Output/Input selection	(Index C9h)	X	S	S	S	X	X	X	X
GP I/O Group 3		**GPIO30**	**GPIO31**	**GPIO32**	**GPIO33**	**GPIO34**	**GPIO35**	**GPIO36**	**GPIO37**
GPIO Control in S3/S5		X	X	X	X	X	X	X	X
Multi-pin selection	(Index 27h)	S	S	S	S	X	X	S	S
Pin polarity	(Index B2h)	-	-	-	-	X	X	-	-
Internal pull-up enable	(Index BAh)	-	-	-	-	X	X	-	-
Simple I/O enable	(Index C2h)	-	-	-	-	X	X	-	-
Output/Input selection	(Index CAh)	-	-	-	-	X	X	-	-
GP I/O Group 4		**GPIO40**	**GPIO41**	**GPIO42**	**GPIO43**	**GPIO44**	**GPIO45**	**GPIO46**	**GPIO47**
GPIO Control in S3/S5		O	O	O	O	O	O	X	X
Multi-pin selection	(Index 28h)	S	S	S	S	S	S	X	X
Pin polarity	(Index B3h)	-	-	-	-	-	-	X	X
Internal pull-up enable	(Index BBh)	-	-	-	-	-	-	X	X
Simple I/O enable	(Index C3h)	S	S	S	S	S	S	X	X
Output/Input selection	(Index CBh)	S	S	S	S	S	S	X	X
GP I/O Group 5		**GPIO50**	**GPIO51**	**GPIO52**	**GPIO53**	**GPIO54**	**GPIO55**	**GPIO56**	**GPIO57**
GPIO Control in S3/S5		X	X	X	O	O	O	X	X
Multi-pin selection	(Index 29h)	-	-	-	S	S	S	S	S
Pin polarity	(Index B4h)	-	-	-	-	-	-	-	-
Internal pull-up enable	(Index BCh)	X	S	S	X	S	S	S	S
Simple I/O enable	(Index C4h)	-	-	-	S	S	S	-	-
Output/Input selection	(Index CCh)	-	-	-	S	S	S	-	-
GP I/O Group 6		**GPIO60**	**GPIO61**	**GPIO62**	**GPIO63**	**GPIO64**	**GPIO65**	**GPIO66**	**GPIO67**
GPIO Control in S3/S5		X	X	X	X	X	X	X	X
Multi-pin selection-1	(Index 29h)	S *Note1	S *Note1	S *Note1	X	X	X	X	X
Multi-pin selection-2	(Index 2Dh)	X	X	X	-	X	X	X	X
Pin polarity*Note4	(Index B5h)	-	-	-	S	X	X	X	X
Internal pull-up enable	(Index BDh)	S	S	S	S	X	X	X	X
Output/Input selection	(Index CDh)	-	-	-	S	X	X	X	X
Note:		*Note 1: GP60~GP62 enabled by index 29h<bit 6>=1 *Note 2: GP63~GP67 enabled by index 2Dh<bit 3-7> *Note 3: GP66 and GP67 simple I/O output default high *Note 4: The pin polarity is active only when the simple I/O output is enabled.							

CONFIDENTIAL

This page is intentionally left blank.

CONFIDENTIAL

7. Power On Strapping Options and Special Pin Routings

Table 7-1. Power On Strapping Options

	Symbol	Strapping Event	Value	Description
JP1 Pin 24	DSW_EUP_SEL	Internal 3VSB_OK	1	EUP
			0	DSW *Note1
JP3 Pin 58	Vih/Vil_SEL	Internal 3VSB_OK	1	3.3V Not Bay-Trail Platform*Note3
			0	1.8V Bay-Trail Platform*Note2
JP4 Pin 60	K8PWR_EN	Internal 3VSB_OK	1	Disable K8 power sequence function
			0	Enable K8 power sequence function
JP6 Pin 56	LPC_eSPI_SEL	Internal 3VSB_OK	1	LPC Mode
			0	eSPI Mode

Note:
1. This function must be pulled up to 3VSB.
2. 1.8V input threshold voltage for SUSB#/SUSC#/LRESET#/SERIRQ#/GP2x signals
3. 3.3V input threshold voltage for SUSB#/SUSC#/LRESET#/SERIRQ#/GP2x signals

CONFIDENTIAL

Figure 7-1. IT8613E EUP Applications Circuitry for Intel ICH

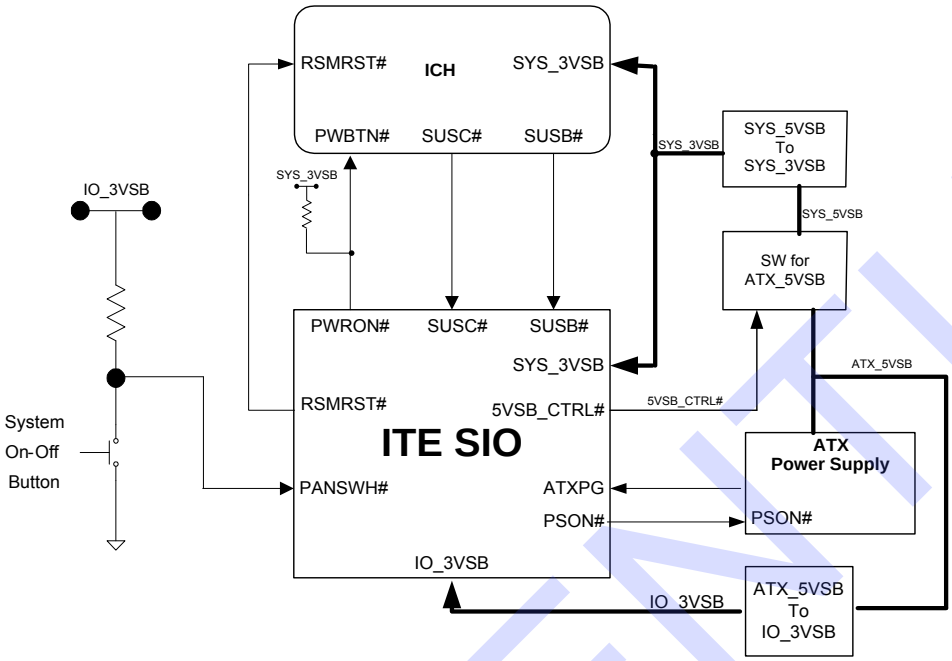

Figure 7-2. IT8613E DSW Applications Circuitry for Intel CPT/PCH

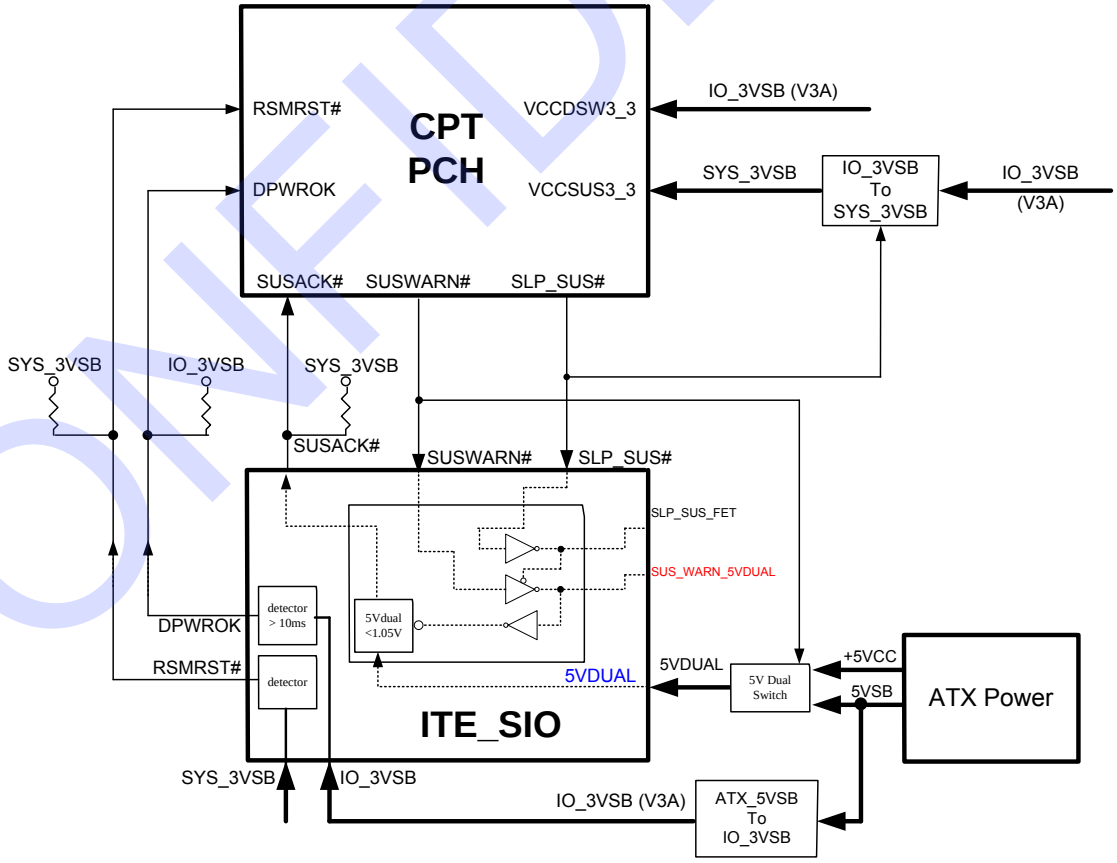

CONFIDENTIAL

8. Configuration

8.1 Configuring Sequence

After hardware reset or power-on reset, the IT8613E enters the normal mode with all logical devices disabled except KBC. The initial state (enable bit) of this logical device (KBC) is ”1”.

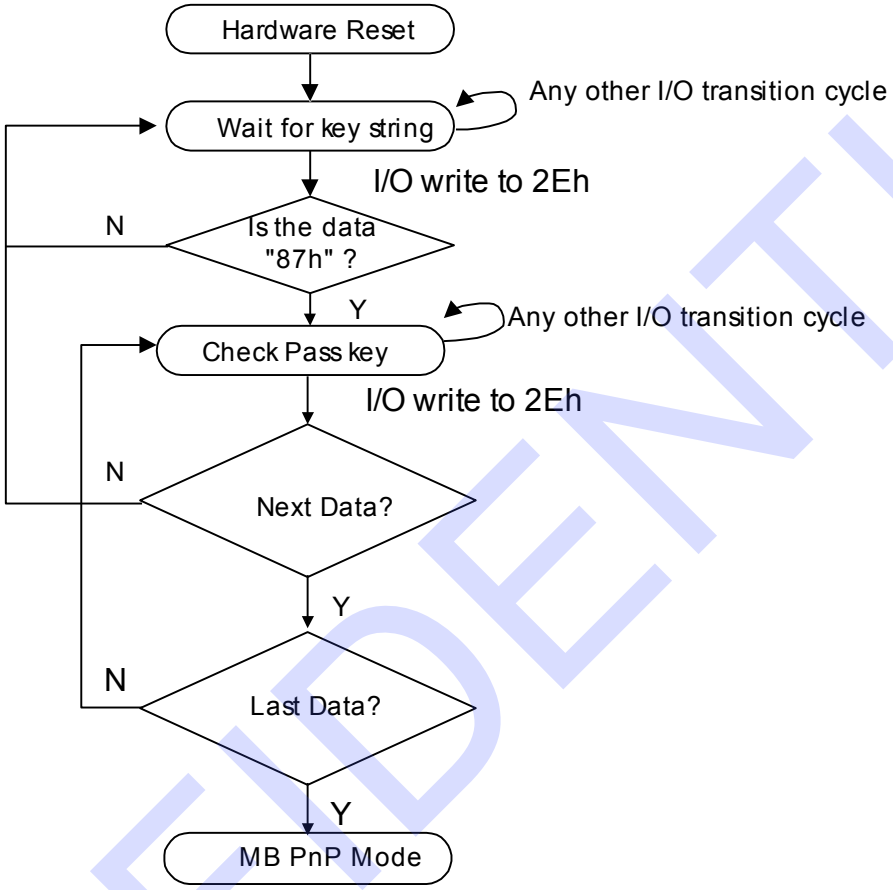

There are three steps below to completing the configuration setup:

(1) Enter MB PnP Mode
(2) Modify data of configuration registers
(3) Exit MB PnP Mode

The undesired result may occur if the MB PnP Mode is not exited properly.

(1) Enter MB PnP Mode

To enter the MB PnP Mode, four special I/O write operations are required to be performed during the Wait for Key state and in order to ensure the initial state of the key-check logic, it is necessary to perform four write operations to the Special Address port (2Eh). Two different enter keys are provided to select configuration ports (2Eh/2Fh or 4Eh/4Fh) of the next step.

		Address Port	Data Port
	87h, 01h, 55h, 55h;	2Eh	2Fh
or	87h, 01h, 55h, AAh;	4Eh	4Fh

CONFIDENTIAL

(2) Modify Data of Configuration Registers

All configuration registers can be accessed after entering the MB PnP Mode. Before accessing a selected register, the content of Index 07h must be changed to the LDN to which the register belongs, except some Global registers.

(3) Exit MB PnP Mode

Set bit 1 of the configure control register (Index=02h) to “1” to exit the MB PnP Mode.

CONFIDENTIAL

8.2 Configuration Registers

All registers except APC/PME registers will be reset to the default state when RESET is activated.

Table 8-1. Global Configuration Registers

LDN	Index	R/W	Reset	Configuration Register or Action
All	02h	W	NA	Configure Control
All	07h	R/W	NA	Logical Device Number (LDN)
All	20h	R	86h	Chip ID Byte 1
All	21h	R	13h	Chip ID Byte 2
All	22h	W-R	05h	Chip Version
All	23h	R/W	40h	Clock Selection Register
All	24h	R/W	00h	Special Register
07h Note1	25h	R/W	00h	GPIO Set 1 Multi-Function Pin Selection Register Bit 0 powered by 3VSB.
07h Note1	26h	R/W	F3h	GPIO Set 2 Multi-Function Pin Selection Register Bit 7-0 powered by 3VSB.
07h Note1	27h	R/W	00h	GPIO Set 3 Multi-Function Pin Selection Register
07h Note1	28h	R/W	00h	GPIO Set 4 Multi-Function Pin Selection Register Bit 7-0 powered by 3VSB.
07h Note1	29h	R/W	00h	GPIO Set 5 Multi-Function Pin Selection Register Bit 5-3 powered by 3VSB.
07h Note1	2Ah	R/W	00h	Special Function Selection Register 1 Bit 7-0 powered by 3VSB.
All	2Bh	R/W	48h	Special Function Selection Register 2
07h Note1	2Ch	R/W	01h	Special Function Selection Register 3 Bit 7-0 powered by 3VSB.
07h	2Dh	R/W	00h	Special Function Selection Register 4
F4h Note1	2Eh	R/W	00h	Test 1 Register
F4h Note1	2Fh	R/W	00h	Test 2 Register

Note 1: These registers can be read from all LDNs.

Table 8-2. Serial Port 1 Configuration Registers

LDN	Index	R/W	Reset	Configuration Register or Action
01h	30h	R/W	00h	Serial Port 1 Activate
01h	60h	R/W	03h	Serial Port 1 Base Address MSB Register
01h	61h	R/W	F8h	Serial Port 1 Base Address LSB Register
01h	70h	R/W	04h	Serial Port 1 Interrupt Level Select
01h	F0h	R/W	00h	Serial Port 1 Special Configuration Register 1
01h	F1h	R/W	50h	Serial Port 1 Special Configuration Register 2

CONFIDENTIAL

Table 8-3. Environment Controller Configuration Registers

LDN	Index	R/W	Reset	Configuration Register or Action
04h	30h	R/W	00h	Environment Controller Activate
04h	60h	R/W	02h	Environment Controller Base Address MSB Register
04h	61h	R/W	90h	Environment Controller Base Address LSB Register
04h	62h	R/W	02h	PME Direct Access Base Address MSB Register
04h	63h	R/W	30h	PME Direct Access Base Address LSB Register
04h	70h	R/W	09h	Environment Controller Interrupt Level Select
04h	F0h	R/W	00h	APC/PME Event Enable Register
04h	F1h	R/W	00h	APC/PME Status Register
04h	F2h	R/W	00h	APC/PME Control Register 1
04h	F3h	R/W	00h	Environment Controller Special Configuration Register
04h	F4h	R-R/W	00h	APC/PME Control Register 2
04h	F5h	R/W	-	APC/PME Special Code Index Register
04h	F6h	R/W	-	APC/PME Special Code Data Register
04h	FAh	R/W	-	Special Configuration Register 1
04h	FBh	R/W	-	Special Configuration Register 2
04h	FCh	R/W	-	PWRON# Delay Selection Register

Table 8-4. KBC(Keyboard) Configuration Registers

LDN	Index	R/W	Reset	Configuration Register or Action
05h	30h	R/W	01h	KBC(Keyboard) Activate
05h	60h	R/W	00h	KBC(Keyboard) Data Base Address MSB Register
05h	61h	R/W	60h	KBC(Keyboard) Data Base Address LSB Register
05h	62h	R/W	00h	KBC(Keyboard) Command Base Address MSB Register
05h	63h	R/W	64h	KBC(Keyboard) Command Base Address LSB Register
05h	70h	R/W	01h	KBC(Keyboard) Interrupt Level Select
05h	71h	R-R/W	02h	KBC(Keyboard) Interrupt Type [Note3]
05h	F0h	R/W	48h	KBC(Keyboard) Special Configuration Register

Table 8-5. KBC(Mouse) Configuration Registers

LDN	Index	R/W	Reset	Configuration Register or Action
06h	30h	R/W	00h	KBC(Mouse) Activate
06h	70h	R/W	0Ch	KBC(Mouse) Interrupt Level Select
06h	71h	R-R/W	02h	KBC(Mouse) Interrupt Type [Note3]
06h	F0h	R/W	00h	KBC(Mouse) Special Configuration Register

Note 3: These registers are **read only** unless the write enable bit (Index=F0h) is asserted.

CONFIDENTIAL

Table 8-6. GPIO Configuration Registers

LDN	Index	R/W	Reset	Configuration Register or Action
07h	60h	R/W	00h	SMI# Normal Run Access Base Address MSB Register
07h	61h	R/W	00h	SMI# Normal Run Access Base Address LSB Register
07h	62h	R/W	00h	Simple I/O Base Address MSB Register
07h	63h	R/W	00h	Simple I/O Base Address LSB Register
07h	70h	R/W	00h	Panel Button De-bounce Interrupt Level Select Register
07h	71h	R/W	00h	Watch Dog Timer Control Register
07h	72h	R/W	20h	Watch Dog Timer Configuration Register
07h	73h	R/W	38h	Watch Dog Timer Time-out Value (LSB) Register
07h	74h	R/W	00h	Watch Dog Timer Time-out Value (MSB) Register
07h	B0h	R/W	00h	GPIO Set 1 Pin Polarity Register
07h	B1h	R/W	00h	GPIO Set 2 Pin Polarity Register
07h	B2h	R/W	00h	GPIO Set 3 Pin Polarity Register
07h	B3h	R/W	00h	GPIO Set 4 Pin Polarity Register
07h	B4h	R/W	00h	GPIO Set 5 Pin Polarity Register
07h	B8h	R/W	20h	GPIO Set 1 Pin Internal Pull-up Enable Register
07h	BAh	R/W	00h	GPIO Set 3 Pin Internal Pull-up Enable Register
07h	BBh	R/W	00h	GPIO Set 4 Pin Internal Pull-up Enable Register
07h	BCh	R/W	00h	GPIO Set 5 Pin Internal Pull-up Enable Register
07h	BDh	R/W	00h	GPIO Set 6 Pin Internal Pull-up Enable Register
07h	C0h	R/W	01h	Simple I/O Set 1 Enable Register Bit 0 powered by 3VSB.
07h	C1h	R/W	00h	Simple I/O Set 2 Enable Register Bit 7-0 powered by 3VSB.
07h	C2h	R/W	00h	Simple I/O Set 3 Enable Register
07h	C3h	R/W	40h	Simple I/O Set 4 Enable Register Bit 7-0 powered by 3VSB.
07h	C4h	R/W	00h	Simple I/O Set 5 Enable Register Bit 7-0 powered by 3VSB.
07h	C8h	R/W	01h	Simple I/O Set 1 Output Enable Register
07h	C9h	R/W	00h	Simple I/O Set 2 Output Enable Register
07h	CAh	R/W	00h	Simple I/O Set 3 Output Enable Register
07h	CBh	R/W	40h	Simple I/O Set 4 Output Enable Register Bit 7-0 powered by 3VSB.
07h	CCh	R/W	00h	Simple I/O Set 5 Output Enable Register Bit 7-0 powered by 3VSB.
07h	CDh	R/W	00h	Simple I/O Set 6 Output Enable Register Bit 7-0 powered by 3VSB.
07h	E0h	R/W	00h	Panel Button De-bounce 0 Input Pin Mapping Register
07h	E1h	R/W	00h	Panel Button De-bounce 1 Input Pin Mapping Register

CONFIDENTIAL

LDN	Index	R/W	Reset	Configuration Register or Action
07h	E2h	R/W	00h	IRQ External Routing 0 Input Pin Mapping Register
07h	E3h	R/W	00h	IRQ External Routing 1 Input Pin Mapping Register
07h	E4h	R/W	00h	IRQ External Routing 1-0 Interrupt Level Selection Registers
07h	F0h	R/W	00h	SMI# Control Register 1
07h	F1h	R/W	00h	SMI# Control Register 2
07h	F2h	R/W	00h	SMI# Status Register 1
07h	F3h	R/W	00h	SMI# Status Register 2
07h	F4h	R/W	00h	SMI# Pin Mapping Register
07h	F5h	R/W	00h	Hardware Monitor Thermal Output Pin Mapping Register Bit 7-0 powered by 3VSB.
07h	F6h	R/W	0Eh	Hardware Monitor Alert Beep Pin Mapping Register
07h	F7h	R/W	00h	Keyboard Lock Pin Mapping Register
07h	F8h	R/W	00h	GP LED Blinking 1 Pin Mapping Register Bit 7-0 powered by 3VSB.
07h	F9h	R/W	00h	GP LED Blinking 1 Control Register Bit 7-0 powered by 3VSB.
07h	FAh	R/W	00h	GP LED Blinking 2 Pin Mapping Register Bit 7-0 powered by 3VSB.
07h	FBh	R/W	00h	GP LED Blinking 2 Control Register Bit 7-0 powered by 3VSB.

Table 8-7. Consumer IR Configuration Registers

LDN	Index	R/W	Reset	Configuration Register or Action
0Ah	30h	R/W	00h	Consumer IR Activate
0Ah	60h	R/W	03h	Consumer IR Base Address MSB Register
0Ah	61h	R/W	10h	Consumer IR Base Address LSB Register
0Ah	70h	R/W	0Bh	Consumer IR Interrupt Level Select
0Ah	F0h	R/W	06h	Consumer IR Special Configuration Register

CONFIDENTIAL

8.2.1 Logical Device Base Address

The base I/O range of logical devices shown below is located in the base I/O address range of each logical device.

Table 8-8. Base Address of Logical Devices

Logical Devices	Address	Notes
LDN=1 SERIAL PORT 1	Base + (0 -7)	
LDN=4 Environment Controller	Base1 + (0 -7) Base2 + (0 -3)	Environment Controller PME#
LDN=5 KBC	Base1 + Base2	KBC
LDN=A Consumer IR	Base + (0 -7)	

CONFIDENTIAL

8.3 Global Configuration Registers (LDN: All)

8.3.1 Configure Control (Index=02h)

This register is **write only**. Its values are not sticky; that is to say, a hardware reset will automatically clear the bits, and the software is not required to clear them.

Bit	Description
7-2	**Reserved**
1	Returns to the "Wait for Key" state. This bit is used when the configuration sequence is completed.
0	Resets all logical devices and restores configuration registers to their power-on states.

8.3.2 Logical Device Number (LDN, Index=07h)

This register is, **read/write,** which is to select the current logical devices. By reading data from or writing data to the configuration of I/O, Interrupt, DMA and other special functions, all registers of the logical devices can be accessed. In addition, ACTIVATE command is only effective for the selected logical devices.

8.3.3 Chip ID Byte 1 (Index=20h, Default=86h)

This register is Chip ID Byte 1 and **read only**. Bits [7:0]=86h when read.

8.3.4 Chip ID Byte 2 (Index=21h, Default=13h)

This register is Chip ID Byte 2 and **read only**. Bits [7:0]=13h when read.

8.3.5 Chip Version (Index=22h, Default=05h)

Bit	Description
7-4	**Reserved**
3-0	**Version** 001b for BX version 010b for CX version 011b for DX version 101b for EX version The part no. is IT8613E/EX.

8.3.6 Clock Selection Register (Index=23h, Default=40h)

Bit	Description
7	**LDN4\Index F4h<5> Register Clear** This function is activated when PANSWH# is low for over 4 seconds. 0: Disable 1: Enable
6	**VCC_OK Detect Select (VCCOK_SEL)** 0: Internal VCC_OK (AVCC3 = 2.6V typical) 1: PSON# rising (Default) Note 1: This register is kept by 3VSB. Note 2: If PSON# pin is not used for the control of the power supply and VCCOK_SEL=1 (GBL\Index 23[bit-6]=1), it is necessary to pull it down to the GND.
5	**PWRGD Source by VIN2 Enable/Disable(Powered by 3VSB)** 0: Enable 1: Disable

CONFIDENTIAL

Bit	Description
4	**Clock Source Select of Watch Dog Timer and LED Blinking** 0: Internal oscillating clock (Default) 1: External CLKIN Please refer to section 9.2 for the detailed setting.
3	**CLK Select** 0: Internal DPLL CLK 1: External CLK_IN Please refer to section 9.2 for the detailed setting.
2	**PWRGD3 Timing Selection** 0: 150ms 1: 300ms
1	**KB/MS Software Swap Enable (Powered by 3VSB)** 0: Disable (Default) 1: Enable LDN4 IndexF4h<bit7> must be set to “1b” for “disable”.
0	**CLKIN Frequency** 0: 48 MHz (Default) 1: 24 MHz Please refer to section 9.2 for the detailed setting.

8.3.7 Special Register (Index=24h, Default=00h)

Bit	Description
7	**Software Lock Enable** 0: Disable (Default) 1: Enable
6	**LDN7 lock enable if 24h<7>=1** 0: Disable (Default) 1: Enable
5	**LDN4 lock enable if 24h<7>=1** 0: Disable (Default) 1: Enable
4	**EC(295h/296h) lock enable if 24h<7>=1** 0: Disable (Default) 1: Enable
3-0	**Reserved**

8.3.8 GPIO Set 1 Multi-Function Pin Selection Register (Index=25h, Default=00h)

If the enabled bits are not set, the multi-function pins will perform the original functions. Conversely, if they are set, they will perform the GPIO functions. This register can be read from any LDN, but can only be written if LDN=07h.

Bit	Description
7-4	**Reserved**
3	**Function Selection of Pin 5** 0: 5VSB_CTRL# 1: GP13
2	**Function Selection of Pin 11** 0: PCIRST1# (Default), PCH_C0A if 2Ah<6>=1 1: GP12
1	**Reserved**

CONFIDENTIAL

Bit	Description
0	**Function Selection of Pin 42** 0: PCIRST3# (Default) 1: GP10 CIRRX1 if CIR enabled

8.3.9 GPIO Set 2 Multi-Function Pin Selection Register (Index=26h, Default=F3h)

If the enabled bits are not set, the multi-function pins will perform the original functions. Conversely, if they are set, they will perform the GPIO functions. This register can be read from any LDN, but can only be written if LDN=07h.

Bit	Description
7-4	**Reserved**
3	**Function Selection of Pin 7** 0: DPWROK, if JP1=0 (Default) 1: GP23
2	**Function Selection of Pin 8** 0: PCH_D0B (Default) For THERMTRIP#, please refer to LDN7 Index E7[0]. 1: GP22
1	**Function Selection of Pin 9** 0: Reserved 1: GP21 (Default)
0	**Reserved**

8.3.10 GPIO Set 3 Multi-Function Pin Selection Register (Index=27h, Default=00h)

If the enabled bits are not set, the multi-function pins will perform the original functions. Conversely, if they are set, they will perform the GPIO functions. This register can be read from any LDN, but can only be written if LDN=07h.

Bit	Description
7	**Function Selection of Pin 3** 0: FAN_TAC3 (Default) 1: GP37
6	**Function Selection of Pin 4** 0: FAN_CTL3 (Default) 1: GP36
5-4	**Reserved**
3	**Function Selection of Pin 61** 0: DCD1# if COM1 enable FAN_CTL5 1: GP33
2	**Function Selection of Pin 62** 0: RI1# if COM1 enable 1: GP32
1	**Function Selection of Pin 63** 0: CTS1# if COM1 enable 1: GP31 / FAN_TAC5
0	**Function Selection of Pin 6** 0: ATXPG (Default) 1: GP30

CONFIDENTIAL

8.3.11 GPIO Set 4 Multi-Function Pin Selection Register (Index=28h, Default=00h)

If the enabled bits are not set, the multi-function pins will perform the original functions. Conversely, if they are set, they will perform the GPIO functions. This register can be read from any LDN, but can only be written if LDN=07h.

Bit	Description
7-6	**Reserved**
5	**Function Selection of Pin 57** 0: DSR1# if COM1 enable PCH_D0A if 2Bh<5>=1 1: GP45
4	**Function Selection of Pin 27** 0: PECI, SBTSI_C (Default) 1: GP44
3	**Function Selection of Pin 26** 0: SST, SBTSI_D, PCH_D1 if 2Ah<3>=1 (Default) 1: GP43
2	**Function Selection of Pin 55** 0: PCH_C0B: if 2Ah[6]=0 1: GP42
1	**Function Selection of Pin 59** 0: SIN1 (Default) 1: GP41
0	**Function Selection of Pin 37** 0: 3VSBSW#/SCL0 (Default) 1: GP40

8.3.12 GPIO Set 5 Multi-Function Pin Selection Register (Index=29h, Default=00h)

If the enabled bits are not set, the multi-function pins will perform the original functions. Conversely, if they are set, they will perform the GPIO functions. This register can be read from any LDN, but can only be written if LDN=07h.

Bit	Description
7	**Function Selection of Pin 41, 40,** 0: MCLK, MDAT; FAN_CTL4, FAN_TAC4 if 2Ah[0]=1 (Default) 1: GP56, GP57
6	**Function Selection of Pin 39, 38, 21** 0: KCLK, KDAT, KRST# (Default) 1: GP60, GP61, GP62
5	**Function Selection of Pin 43** 0: RSMRST# (Default) RSMRST# is an open-drain output function, which is active low about 100ms when SYS_3VSB is powered on. 1: GP55
4	**Function Selection of Pin 32** 0: PME# (Default) 1: GP54
3	**Function Selection of Pin 35** 0: SUSC# (Default) 1: GP53

CONFIDENTIAL

Bit	Description
2	**Function Selection of Pin 1** 0: FAN_TAC2 (Default) 1: GP52
1	**Function Selection of Pin 2** 0: FAN_CTL2 (Default) 1: GP51
0	**Function Selection of Pin 24** 0: Reserved 1: GPO50

8.3.13 Special Function Selection Register 1 (Index=2Ah, Default=01h)

This register can be read from any LDN, but can only be written if LDN=07h.

Bit	Description
7	**Enable 3VSBSW# (For System Suspend-to-RAM)** 0: 3VSBSW# /is always inactive. (Default) 1: 3VSBSW# is enabled. It will be (NOT SUSB#) NAND SUSC#.
6	**PCH SM-Link Clock 0 A/B Selection** 0: PCH_C0B, Pin55 1: PCH_C0A, Pin11
5	**Reserved**
4	**Delay PCIRST1/3# to 1ms** 0: Disable (Default) 1: Enable
3	**PCH SM-Link Data 0/1 Pin Selection** 0: PCH_D0 A/B refer to LDN07 Index 2Bh<5> 1: PCH_D1, Pin26
2	**PCH SM-Link Clock 0 Pin Selection** 0: Refer to 2Ah<6> 1: Reserved
1	**Reserved**
0	**FAN_CTL4 Enable** 0: Disable 1: Enable (Default)

CONFIDENTIAL

8.3.14 Special Function Selection Register 2 (Index=2Bh, Default=48h)

Bit	Description
7-6	**Reserved**
5	**PCH SM-Link Data0 A/B Pin Selection** 0:PCH_D0B, Pin8 1:PCH_D0A, Pin57
4	**PWRGD Source by ATXPG Enable/Disable (Powered by 3VSB)** 0: Enable 1: Disable
3	**Reserved**
2-0	**PANSWH# Mask Time** 000: Default 001: 1 second 010: 2 seconds 011: 3 seconds 100: 4 seconds

8.3.15 Special Function Selection Register 3 (Index=2Ch, Default=01h)

This register can be read from any LDN, but can only be written if LDN=07h.

Bit	Description
7	**Reserved**
6	**K8 PWRON_SEL if JP4=0** 0: Normal (Default) 1: Software disabled
5	**Reserved**
4	**PS2 Mouse Double Click Wake-up Mode Selection** 0: 3-Byte mode (Default)1: 4-Byte mode
3-0	**Reserved**

8.3.16 Special Function Selection Register 4 (Index=2Dh, Default=00h)

This register can be read from any LDN, but can only be written if LDN=07h.

Bit	Description
7-4	**Reserved**
3	**Function Selection of Pin 64** 0: SLP_SUS#, if JP1=0 1: GP63
2-1	**PCICLK Selection** 00: PCICLK=33MHz 01: PCICLK=25MHz 10: PCICLK=19.2MHz 11: PCICLK=32KHz Please refer to section 9.2 for the detailed setting.
0	**K8 Vcore(0.8) Sensor Disable** This register is reset by LRESET# and falling edge of SUSB#. 0: Disable 1: Enable

CONFIDENTIAL

8.3.17 Test 1 Register (Index=2Eh, Default=00h)

This register is reserved for ITE and should not be set.

8.3.18 Test 2 Register (Index=2Fh, Default=00h)

This register is reserved for ITE and should not be set.

CONFIDENTIAL

8.4 Serial Port 1 Configuration Registers (LDN=01h)

8.4.1 Serial Port 1 Activate (Index=30h, Default=00h)

Bit	Description
7-1	**Reserved**
0	**Serial Port 1 Enable** 1: Enable 0: Disable

8.4.2 Serial Port 1 Base Address MSB Register (Index=60h, Default=03h)

Bit	Description
7-4	**Read only** as “0h” for Base Address[15:12]
3-0	**Read/write**, mapped as Base Address[11:8]

8.4.3 Serial Port 1 Base Address LSB Register (Index=61h, Default=F8h)

Bit	Description
7-3	**Read/write**, mapped as Base Address[7:3]
2-0	**Read only** as “000b”

8.4.4 Serial Port 1 Interrupt Level Select (Index=70h, Default=04h)

Bit	Description
7-4	**Reserved** with default “0h”
3-0	**Interrupt Select Level for Serial Port 1** Please refer to Table 8-9 Interrupt Level Mapping Table.

8.4.5 Serial Port 1 Special Configuration Register 1 (Index=F0h, Default=00h)

Bit	Description
7	**RS485 Enable** 1: Enable 0: Disable
6	**RTS1# Invert Enable** 1: Enable 0: Disable
5	**UART1 Port80 Enable (U1P80EN)** 1: IO80_OUT1 enabled 0: Disable (Default) Note: The output pin of this function is SOUT1.
4-3	**Reserved** (Must be “00b”)
2-1	**Clock Source** 00: 24 MHz/13 (Standard) 01: 24 MHz/12 10: Reserved 11: Reserved
0	**IRQ Type** 1: IRQ sharing 0: Normal

CONFIDENTIAL

8.5 Environment Controller Configuration Registers (LDN=04h)

8.5.1 Environment Controller Activate (Index=30h, Default=00h)

Bit	Description
7-1	**Reserved**
0	**Environment Controller Enable** 1: Enable 0: Disable This is a read/write register.

8.5.2 Environment Controller Base Address MSB Register (Index=60h, Default=02h)

Bit	Description
7-4	**Read only** as “0h” for Base Address[15:12]
3-0	**Read/write**, mapped as Base Address[11:8]

8.5.3 Environment Controller Base Address LSB Register (Index=61h, Default=90h)

Bit	Description
7-3	**Read/write**, mapped as Base Address[7:3]
2-0	**Read only** as “000b”

8.5.4 PME Direct Access Base Address MSB Register (Index=62h, Default=02h)

Bit	Description
7-4	**Read only** as “0h” for Base Address[15:12]
3-0	**Read/write**, mapped as Base Address[11:8]

8.5.5 PME Direct Access Base Address LSB Register (Index=63h, Default=30h)

Bit	Description
7-3	**Read/write**, mapped as Base Address[7:3]
2-0	**Read only** as “000b.”

8.5.6 Environment Controller Interrupt Level Select (Index=70h, Default=09h)

Bit	Description
7-4	**Reserved** with default “0h”
3-0	**Interrupt Level Select for Environment Controller** Please refer to Table 8-9 Interrupt Level Mapping Table on page 60.

CONFIDENTIAL

8.5.7 APC/PME Event Enable Register (PER) (Index=F0h, Default=00h)

Bit	Description
7	This bit is set to 1 when 3VSB is off and becomes ineffective if 0 is written to it. This bit is write clear.
6-5	**Reserved**
4	**PS/2 Mouse Event** 0: Disable 1: Enable
3	**Keyboard Event** 0: Disable 1: Enable
2-1	**Reserved**
0	**CIR Event** 0: Disable 1: Enable

8.5.8 APC/PME Status Register (PSR) (Index=F1h, Default=00h)

Bit	Description
7	This bit is set to 1 when AVCC3 is on at the previous AC power failure whereas 0 when AVCC3 is off. This bit is write 1 clear
6-5	**Reserved**
4	0: No PS/2 mouse event detected 1: PS/2 mouse event detected
3	0: No keyboard event detected 1: Keyboard event detected
2-1	**Reserved**
0	0: No CIR event detected 1: CIR event detected

8.5.9 APC/PME Control Register 1 (PCR 1) (Index=F2h, Default=00h)

Bit	Description
7	**PER and PSR Normal Run Access Enable**
6	**PME# Output Control** 0: Enable 1: Disable
5	This bit is restored automatically to the previous AVCC3 state before the power failure occurs. **Note:** AC failure resume can be made by either IO or South Bridge. For the use of IO, the BIOS needs to be set as the following: LDN4 F4<5> and LDN4 F2<5> setting: 1 X :Always ON 0 1 :Memory 0 0 :Always OFF For the use of South Bridge, F4 bit 5 and F4 bit 6 need to be set to 1.
4	**Reserved**
3	**Keyboard event mode selection when AVCC3 is on** 1: Determined by PCR 2 0: Pulse falling edge on KCLK
2	**Mouse event when AVCC3 is off** 1: Determined by LDN4\FBh<6-4> 0: Pulse falling edge on MCLK

CONFIDENTIAL

Bit	Description
1	**Mouse event when AVCC3 is on** 1: Determined by LDN4\FBh<6-4> 0: Pulse falling edge on MCLK
0	**RSMRST# Delay Time Setting (Kept by VBAT)** 1: 250ms 0: 85ms (Default)

8.5.10 Environment Controller Special Configuration Register (Index=F3h, Default=00h)

Bit	Description
7-6	**Reserved**
5	**Reserved**; must be 0b
4-2	**Reserved**
1	**SMBUS Slave 0 Enable (Pin 37:SCL0/ Pin 36:SDA0)** 0: Disabled.(Default) 1: Enabled
0	**IRQ Type** 1: IRQ sharing 0: Normal

8.5.11 APC/PME Control Register 2 (PCR 2) (Index=F4h, Default=00h)

Bit	Description
7	**Auto-swap of KCLK/KDAT and MCLK/MDAT** 0: Enable (Default) 1: Disable
6	**Gate Extra PWRON# Pulse at First 3VSB Power-on** 0: None gating (Default) 1: Gating **Note:** AC failure resume can be made by either IO or South Bridge. For the use of IO, the BIOS needs to be set as the following: LDN4 F4<5> and LDN4 F2<5> setting: 1 X :Always ON 0 1 :Memory 0 0 :Always OFF For the use of South Bridge, F4 bit 5 and F4 bit 6 need to be set to 1.
5	**PSON# state when 3VSB is switched from off to on** 0: High-Z (power OFF in default) 1: Inverting of SUSB#
4	**Keyboard Power-up Event-2** 0: Enable 1: Disable
3-2	**Key Number of Keyboard Power-up Event** 00: 5 Key string mode, 3 keys simultaneous mode 01: 4 Key string mode, 2 keys simultaneous mode 10: 3 Key string mode, 1 key simultaneous mode 11: 2 Key string mode, Reserved (Not valid for simultaneous mode)
1-0	**Mode Selection of Keyboard Power-up Event** 00: KCLK falling edge 01: Key string mode 10: Simultaneous key stroke mode 11: Reserved

CONFIDENTIAL

8.5.12 APC/PME Special Code Index Register (Index=F5h)

Bit	Description
7-6	**Reserved** (should be "00")
5-0	**Indicate which Identification Key Code or CIR code register to be read/written via 0xF6** 00h~04h: Key code 20h~32h: CIR code 34h~37h: VBAT registers 38h~3Eh: Keyboard Power-up Event-2 code

8.5.13 APC/PME Special Code Data Register (Index=F6h)

There are 5 bytes for the Key String mode, 3 bytes for Stroke Keys at the same time mode and CIR event codes.

8.5.14 Special Configuration Register 1 (Index=FAh, Default=00h)

Bit	Description
7-6	**Reserved**
5	**5VSB_SEN Enable** 0: Disable (Default) 1: Enable
4	**EuP Wake-up Event Enable/Disable** 0: Disable (Default) 1: Enable
3	**Reserved**
2	**RI1# Wake-up Event Enable/Disable** 0: Disable (Default) 1: Enable
1	**5VSB_CTRL# Enable/Disable** 0: Disable (Default) 1: Enable
0	**Reserved**

8.5.15 Special Configuration Register 2 (Index=FBh, Default=00h)

Bit	Description
7	**Reserved**
6-4	**PS/2 Mouse Wake-up Event Selection** 000: Double click any button 001: One click of the left button. 010: One click of the right button. 011: One click of the left or right button. 101: Tow click of the left button. 110: Tow click of the right button. Others: Reserved.
3	**Reserved**
2	**RI1# Wake-up Event Status** 0: No RI1# event detected 1: RI1# event detected

CONFIDENTIAL

Bit	Description
1-0	**Resume Timing from AC Fail Resume** 00: 2 seconds 01: 4 seconds 10: 8 seconds 11: 12 seconds

8.5.16 PWRON# Delay Selection Register (Index=FCh, Default=00h)

Bit	Description
7-5	**PWRON# Delay Select** 000: No delay (Default) 001: 100ms 010: 200ms 011: 400ms 100: 800ms 101: 1s 110: 1.6s 111: 2s Register kept by VBAT
4-0	**Reserved**

CONFIDENTIAL

8.6 KBC(Keyboard) Configuration Registers (LDN=05h)

8.6.1 KBC(Keyboard) Activate (Index=30h, Default=01h)

Bit	Description
7-1	**Reserved**
0	**KBC(Keyboard) Enable** 1: Enable 0: Disable

8.6.2 KBC(Keyboard) Data Base Address MSB Register (Index=60h, Default=00h)

Bit	Description
7-4	**Read only** as “0h” for Base Address [15:12]
3-0	**Read/write,** mapped as Base Address [11:8]

8.6.3 KBC(Keyboard) Data Base Address LSB Register (Index=61h, Default=60h)

Bit	Description
7-0	**Read/write**, mapped as Base Address[7:0]

8.6.4 KBC(Keyboard) Command Base Address MSB Register (Index=62h, Default=00h)

Bit	Description
7-4	**Read only** as “0h” for Base Address[15:12]
3-0	**Read/write**, mapped as Base Address[11:8]

8.6.5 KBC(Keyboard) Command Base Address LSB Register (Index=63h, Default=64h)

Bit	Description
7-0	**Read/write**, mapped as Base Address[7:0]

8.6.6 KBC(Keyboard) Interrupt Level Select (Index=70h, Default=01h)

Bit	Description
7-4	**Reserved** with default “0h”
3-0	**Interrupt Level Select for KBC(Keyboard)** Please refer to Table 8-9 Interrupt Level Mapping Table on page 60.

8.6.7 KBC(Keyboard) Interrupt Type (Index=71h, Default=02h)

This register indicates the interrupt type set for KBC(Keyboard) and is **read only** as “02h” when bit 0 of the KBC(Keyboard) Special Configuration Register is cleared. When bit 0 is set, the interrupt type can be selected as level or edge trigger.

Bit	Description
7-2	**Reserved**
1	1: High level 0: Low level
0	1: Level type 0: Edge type

CONFIDENTIAL

8.6.8 KBC(Keyboard) Special Configuration Register (Index=F0h, Default=48h)

Bit	Description
7-5	**Reserved** Must be “010b”
4	**IRQ Type** 1: IRQ sharing 0: Normal
3	**KBC Clock** 1: 8 MHz 0: 12 MHz
2	**KBC Lock** 1: Enable 0: Disable
1	**Interrupt Type Change Enable** 1: The interrupt type for KBC(Keyboard) can be changed. 0: The interrupt type for KBC(Keyboard) is fixed.
0	**Reserved**

CONFIDENTIAL

8.7 KBC(Mouse) Configuration Registers (LDN=06h)

8.7.1 KBC(Mouse) Activate (Index=30h, Default=00h)

Bit	Description
7-1	**Reserved**
0	**KBC(Mouse) Enable** 1: Enable 0: Disable

8.7.2 KBC(Mouse) Interrupt Level Select (Index=70h, Default=0Ch)

Bit	Description
7-4	**Reserved** with default "0h"
3-0	**Interrupt Level Select for KBC(Mouse)** Please refer to Table 8-9 Interrupt Level Mapping Table on page 60.

8.7.3 KBC(Mouse) Interrupt Type (Index=71h, Default=02h)

This register indicates the interrupt type set for KBC(Mouse) and is **read only** as "02h" when bit 0 of the KBC(Mouse) Special Configuration Register is cleared. When bit 0 is set, the interrupt type can be selected as level or edge trigger.

Bit	Description
7-2	**Reserved**
1	1: High level 0: Low level
0	1: Level type 0: Edge type

8.7.4 KBC(Mouse) Special Configuration Register (Index=F0h, Default=00h)

Bit	Description
7-2	**Reserved** with default "00h"
1	**IRQ Type** 1: IRQ sharing 0: Normal
0	**Interrupt Type Change Enable** 1: The interrupt type for KBC(Mouse) can be changed. 0: The interrupt type for KBC(Mouse) is fixed.

CONFIDENTIAL

8.8 GPIO Configuration Registers (LDN=07h)

8.8.1 SMI# Normal Run Access Base Address MSB Register (Index=60h, Default=00h)

Bit	Description
7-4	**Read only** as "0h" for Base Address [15:12]
3-0	**Read/write**, mapped as Base Address [11:8]

8.8.2 SMI# Normal Run Access Base Address LSB Register (Index=61h, Default=00h)

Bit	Description
7-2	**Read/write**, mapped as Base Address [7:2]
1-0	**Read only** as "00b"

8.8.3 Simple I/O Base Address MSB Register (Index=62h, Default=00h)

Bit	Description
7-4	**Read only** as "0h" for Base Address [15:12]
3-0	**Read/write**, mapped as Base Address [11:8]

8.8.4 Simple I/O Base Address LSB Register (Index=63h, Default=00h)

Bit	Description
7-0	**Read/write**, mapped as Base Address[7:0]

8.8.5 Panel Button De-bounce Interrupt Level Select Register (Index=70h, Default=00h)

Bit	Description
7-4	**Reserved**
3-0	**Interrupt Level Select for Panel Button De-bounce** Please refer to Table 8-9 Interrupt Level Mapping Table on page 60.

8.8.6 Watch Dog Timer Control Register (Index=71h, Default=00h)

Bit	Description
7	WDT is reset upon a CIR interrupt.
6	WDT is reset upon a KBC(Mouse) interrupt.
5	WDT is reset upon a KBC(Keyboard) interrupt.
4	**Reserved**
3	**External CLK_IN Select** 0: CLKIN 1: PCICLK Please refer to section 9.2 for the detailed setting.
2	**5VSB_CTL Delay Select** 0: 5s (Default) 1: 10s
1	**Force Time-out** This bit is self-cleared.
0	**WDT Status** 1: WDT value is equal to 0. 0: WDT value is not is equal to 0.

CONFIDENTIAL

8.8.7 Watch Dog Timer Configuration Register (Index=72h, Default=001s0000b)

Bit	Description
7	**WDT Time-out Value Select 1** 1: Second 0: Minute
6	**WDT Output through KRST (pulse) Enable** 1: Enable 0: Disable
5	**WDT Time-out Value Extra Select** 1: 62.5ms x WDT Timer-out value (default = 3.5s) 0: Determined by WDT Time-out value select 1 (bit 7 of this register)
4	**WDT Output through PWRGD Enable** 1: Enable 0: Disable
3-0	**Interrupt Level Select for WDT** Please refer to Table 8-9 Interrupt Level Mapping Table on page 60.

8.8.8 Watch Dog Timer Time-out Value (LSB) Register (Index=73h, Default=38h)

Bit	Description
7-0	**WDT Time-out Value 7-0**

8.8.9 Watch Dog Timer Time-out Value (MSB) Register (Index=74h, Default=00h)

Bit	Description
7-0	**WDT Time-out Value 15-8**

8.8.10 GPIO Set 1-6 Registers (Index B0h~D4h)

GPIO Set	Polarity Register		Internal Pull-up Register		Simple Enable Register		Input/Output Select Register		Input/Output Control Register	
	Index	Default	Index	Default	Index	Default	Index	Default	Index	Default
1	B0h	00h	B8h	00h	C0h	01h	C8h	01h	Simple I/O Base Address Register, refer to section 8.8.3	
2	B1h	00h	--	--	C1h	00h	C9h	00h		
3	B2h	00h	BAh	00h	C2h	00h	CAh	00h		
4	B3h	00h	BBh	00h	C3h	40h	CBh	00h		
5	B4h	00h	BCh	00h	C4h	00h	CCh	00h		
6	-	-	BDh	00h	-	-	CDh	00h		

Note: GP2x and GP53 does not support Internal pull-up.

Polarity Register

These registers are to program the GPIO pin type for polarity inverting or non-inverting.

Bit	Description
7-0	**GPIO Polarity Select** 1: Inverting 0: Non-inverting

CONFIDENTIAL

Internal Pull-up Register

These registers are to enable the GPIO pin internal pull-up.

Bit	Description
7-0	**GPIO Pin Internal Pull-up** 1: Enable 0: Disable

Simple Enable Register

These registers are to select the function as the Simple I/O function or the Alternate function.

Bit	Description
7-0	1: Simple I/O function 0: Alternate function

Input/Output Select Register

These registers are to determine the direction of the Simple I/O.

Bit	Description
7-0	0: Input mode 1: Output mode

8.8.11 Breath LED Control Register 1 (Index=DAh, Default=00h)

Bit	Description
7	**BREATH LED Enable (BRELEN)** 0: Enable 1: Disable Please refer to 9.7 BREATH LED on page 120.
6	Reserved
5-4	**BREATH LED Maximum Duty Cycle Select (HMXD)** 00b: 40h 01b: 80h 10b: C0h 11b: FFh
3-2	**BREATH LED Duty Decreasing Step (DDS)** 00b: 1h 01b: 2h 10b: 4h 11b: 8h
1-0	**BREATH LED Duty Increasing Step (DIS)** 00b: 1h 01b: 2h 10b: 4h 11b: 8h

CONFIDENTIAL

8.8.12 Breath LED Control Register 2 (Index=DBh, Default=00h)

Bit	Description
7	**BREATH LED BLINK Enable** 0: Disable 1: Enable
6-4	**BREATH LED Maximum Duty Cycle Delay Period (HMXDD)** 011b: 1/2 s 100b: 1 s 101b: 2 s 110b: 4 s
3	**Reserved**
2-0	**BREATH LED Zero Duty Cycle Delay Period (HZDD)** 011b: 1/2 s 100b: 1 s 101b: 2 s 110b: 4 s

8.8.13 Panel Button De-bounce 0 Input Pin Mapping Register (Index=E0h, Default=00h)

Bit	Description
7	**Reserved**
6	**IRQ Enable**
5-0	**Input Pin Location** Please refer to Table 8-10 Location Mapping Table on page 61.

8.8.14 Panel Button De-bounce 1 Input Pin Mapping Register (Index=E1h, Default=00h)

Bit	Description
7-6	**Reserved**
5-0	**Input Pin Location** Please refer to Table 8-10 Location Mapping Table on page 61.

8.8.15 IRQ External Routing 1-0 Input Pin Mapping Registers (Index=E3h-E2h, Default=00h)

Bit	Description
7	**Reserved**
6	**IRQ Enable**
5-0	**Input Pin Location** Please refer to Table 8-10 Location Mapping Table on page 61.

8.8.16 IRQ External Routing 1-0 Interrupt Level Selection Registers (Index=E4h, Default=00h)

Bit	Description
7-4	**Interrupt Level Select for IRQ External Routing 1** Please refer to Table 8-9 Interrupt Level Mapping Table on page 60.
3-0	**Interrupt Level Select for IRQ External Routing 0** Please refer to Table 8-9 Interrupt Level Mapping Table on page 60.

CONFIDENTIAL

8.8.17 PANSHW# Mask Time Control Register (Index=ECh, Default=00h)

Bit	Description
7-0	**PANSWH# Mask Time Selection** 00h: Disable (Default) 01h: 1s 02h: 2s ……. FEh: 254s FFh: 255s

8.8.18 SMI# Control Register 1 (Index=F0h, Default=00h)

Bit	Description
7	**Reserved**
6	This bit is to enable the generation of an SMI# due to KBC(Mouse)'s IRQ (EN_MIRQ).
5	This bit is to enable the generation of an SMI# due to KBC(Keyboard)'s IRQ (EN_KIRQ).
4	This bit is to enable the generation of an SMI# due to Environment Controller's IRQ (EN_ECIRQ).
3-2	**Reserved**
1	This bit is to enable the generation of an SMI# due to Serial Port 1's IRQ (EN_S1IRQ).
0	**Reserved**

8.8.19 SMI# Control Register 2 (Index=F1h, Default=00h)

Bit	Description
7	**Reserved**
6	0: Edge trigger 1: Level trigger
5-3	**Reserved**
2	This bit is to enable the generation of an SMI# due to WDT's IRQ (EN_WDT).
1	This bit is to enable the generation of an SMI# due to CIR's IRQ (EN_CIR).
0	This bit is to enable the generation of an SMI# due to PBD's IRQ (EN_PBD).

8.8.20 SMI# Status Register 1 (Index=F2h, Default=00h)

This register is used to read the status of SMI# inputs.

Bit	Description
7	**Reserved**
6	**KBC (PS/2 Mouse)'s IRQ**
5	**KBC(Keyboard)'s IRQ**
4	**Environment Controller's IRQ**
3-2	**Reserved**
1	**Serial Port 1's IRQ**
0	**Reserved**

CONFIDENTIAL

8.8.21 SMI# Status Register 2 (Index=F3h, Default=00h)

This register is used to read the status of SMI# inputs.

Bit	Description
7-6	**Panel Button De-bounce Status 1-0** Writing 1 will reset the status. 0: None detected 1: Detected
5-4	**Reserved**
3	**Reserved**
2	**WDT's IRQ**
1	**CIR's IRQ**
0	**PBD's IRQ**

8.8.22 SMI# Pin Mapping Register (Index=F4h, Default=00h)

Bit	Description
7	**Reserved**
6	**Thermal Out Control Register** 0: Thermal out 1: Reserved
5-0	**SMI# Pin Location** Please refer to Table 8-10 Location Mapping Table on page 61.

8.8.23 Thermal Output Pin Mapping Register (Index=F5h, Default=00h)

Bit	Description
7-6	**Reserved**
5-0	**Pin Location** Please refer to Table 8-10 Location Mapping Table on page 61.

8.8.24 Hardware Monitor Alert Beep Pin Mapping Register (Index=F6h, Default=0Eh)

Bit	Description
7-6	**Reserved**
5-0	**Alert Beep Pin Location** Please refer to Table 8-10 Location Mapping Table on page 61.

8.8.25 Keyboard Lock Pin Mapping Register (Index=F7h, Default=00h)

Bit	Description
7-6	**Reserved**
5-0	**Keyboard Lock Pin Location** Please refer to Table 8-10 Location Mapping Table on page 61.

CONFIDENTIAL

8.8.26 GP LED Blinking 1 Pin Mapping Register (Index=F8h, Default=00h)

Bit	Description
7-6	**Reserved**
5-0	**GP LED Blinking 1 Location** Please refer to Table 8-10 Location Mapping Table on page 61.

8.8.27 GP LED Blinking 1 Control Register (Index=F9h, Default=00h)

Bit	Description
7-6	**GP_LED1 Frequence selection** Please refer to LDN7\F9h[bit 3-1]
5	**GP LED Blinking 1 Short Low Pulse Enable**
4	**LED Blinking 1 Pin Mapping Register Clear** This function is activated when PANSWH# is low for over 4 seconds. 0: Disable 1: Enable
3-1	**GP LED 1 Frequency Control**
0	**GP LED Blinking 1 Output Low Enable**

F9h[7:6]	F9h[3:1]	Blink frequency & Duty		ON/OFF Time			
00	000:	4Hz,	50% Duty	0.125s	OFF	0.125s	ON
00	001:	1Hz,	50% Duty	0.5s	OFF	0.5s	ON
00	010:	0.25Hz,	50% Duty	2s	OFF	2s	ON
00	011:	2Hz,	50% Duty	0.25s	OFF	0.25s	ON
00	100:	0.25Hz,	25% Duty	1s	OFF	3s	ON
00	101:	0.25Hz,	75% Duty	3s	OFF	1s	ON
00	110:	0.125Hz,	25% Duty	2s	OFF	6s	ON
00	111:	0.125Hz	75% Duty	6s	OFF	2s	ON
01	XXX	0.4Hz,	20% Duty	0.5s	OFF	2s	ON
10	XXX	0.5 Hz,	50% Duty	1S	OFF	1S	ON
11	XXX	0.125Hz,	50% Duty	4S	OFF	4S	ON

8.8.28 GP LED Blinking 2 Pin Mapping Register (Index=FAh, Default=00h)

Bit	Description
7-6	**Reserved**
5-0	**GP LED Blinking 2 Location** Please refer to Table 8-10 Location Mapping Table on page 61.

CONFIDENTIAL

8.8.29 GP LED Blinking 2 Control Register (Index=FBh, Default=00h)

Bit	Description
7-6	**GP_LED2 Frequence selection** Please refer to LDN7\FBh[bit 3-1]
5	**GP LED Blinking 2 Short Low Pulse Enable**
4	**LED Blinking 2 Pin Mapping Register Clear** This function is activated when PANSWH# is low for over 4 seconds. 0: Disable 1: Enable
3-1	**GP LED 2 Frequency Control**

FBh[7:6]	FBh[3:1]	Blink frequency & Duty		ON/OFF Time			
00	000:	4Hz,	50% Duty	0.125s	OFF	0.125s	ON
00	001:	1Hz,	50% Duty	0.5s	OFF	0.5s	ON
00	010:	0.25Hz,	50% Duty	2s	OFF	2s	ON
00	011:	0.5Hz,	50% Duty	1s	OFF	1s	ON
00	100:	0.25Hz,	25% Duty	1s	OFF	3s	ON
00	101:	0.25Hz,	75% Duty	3s	OFF	1s	ON
00	110:	0.125Hz,	25% Duty	2s	OFF	6s	ON
00	111:	0.125Hz	75% Duty	6s	OFF	2s	ON
01	XXX	0.4Hz,	20% Duty	0.5s	OFF	2s	ON
10	XXX	0.5 Hz,	50% Duty	1S	OFF	1S	ON
11	XXX	0.125Hz,	50% Duty	4S	OFF	4S	ON

0	**GP LED Blinking 2 Output Low Enable**

CONFIDENTIAL

8.9 Consumer IR Configuration Registers (LDN=0Ah)

8.9.1 Consumer IR Activate (Index=30h, Default=00h)

Bit	Description
7-1	**Reserved**
0	**Consumer IR Enable** 1: Enable 0: Disable

8.9.2 Consumer IR Base Address MSB Register (Index=60h, Default=03h)

Bit	Description
7-4	**Read only** with "0h" for Base Address[15:12]
3-0	**Read/write**, mapped as Base Address[11:8]

8.9.3 Consumer IR Base Address LSB Register (Index=61h, Default=10h)

Bit	Description
7-3	**Read/write**, mapped as Base Address[7:3]
2-0	**Read only** as "000b"

8.9.4 Consumer IR Interrupt Level Select (Index=70h, Default=0Bh)

Bit	Description
7-4	**Reserved** with default "0h"
3-0	**Interrupt Level Select for Consumer IR** Please refer to Table 8-9 Interrupt Level Mapping Table.

8.9.5 Consumer IR Special Configuration Register (Index=F0h, Default=06h)

Bit	Description
7-1	**Reserved** with default "00h"
0	**IRQ Type** 1: IRQ sharing 0: Normal

Note 8-1
Except the standard mode, COM1 cannot be selected in the same mode.

Table 8-9 Interrupt Level Mapping Table

Value	Description
Fh-Dh	Not Valid
3h~Ch	IRQ3~IRQ12
2h	Not Valid
1h	IRQ1
0h	No Interrupt Selected
Else	Not Valid

CONFIDENTIAL

Table 8-10 Location Mapping Table

Location	Description
001 000	GP10 (Pin 42).
001 010	GP12 (Pin 11).
001 011	GP13 (Pin 5).
010 001	GP21 (Pin 9).
010 010	GP22 (Pin 8). .
010 011	GP23 (Pin 7). .
011 000	GP30 (Pin 6).
011 001	GP31 (Pin 63).
011 010	GP32 (Pin 62).
011 011	GP33 (Pin 61).
011 110	GP36 (Pin 4).
011 111	GP37 (Pin 3).
100 000	GP40 (Pin 37).
100 001	GP41 (Pin 59).
100 010	GP42 (Pin 55).
100 011	GP43 (Pin 26).
100 100	GP44 (Pin 27).
100 101	GP45 (Pin 57).
101 000	GPO50 (Pin 24).
101 001	GP51 (Pin 2).
101 010	GP52 (Pin 1).
101 011	GP53 (Pin 35).
101 100	GP54 (Pin 32).
101 101	GP55 (Pin 43). .
101 110	GP56 (Pin 41).
101 111	GP57 (Pin 40).
Else	Reserved

CONFIDENTIAL

This page is intentionally left blank.

CONFIDENTIAL

9. Functional Description

9.1 LPC Interface

The IT8613E supports the peripheral side of the LPC I/F as described in the LPC Interface Specification Rev.1.1. In addition to the required signals (LAD3-0, LFRAME#, LRESET#, LCLK (the same as PCICLK.)), the IT8613E also supports SERIRQ and PME#.

9.1.1 LPC Transactions

The IT8613E supports the required transfer cycle types described in the LPC I/F specification. I/O read and I/O write cycles are used for the programmed I/O cycles. All of these cycles are characteristic of the single byte transfer.

For LPC host I/O read or write transactions, the Super I/O module processes a positive decoding, and the LPC interface can respond to the result of the current transaction by sending out SYNC values on LAD[3:0] signals or leave LAD[3:0] tri-state depending on its result.

CONFIDENTIAL

9.2 Clock Tree

IT8613 supports two clock inputs, PCICLK and CLKIN. PCICLK supports 33MHz/24MHz/25MHz and is required for LPC I/F. CLKIN supports 24MHz/48MHz and is optional for others and the default is the clock not provided. For the external 24MHz/48MHz CLKIN clock setting, please refer to

Table 9-1. Internal clk_in Control Table for the detail.

Figure 9-1. Clock Tree

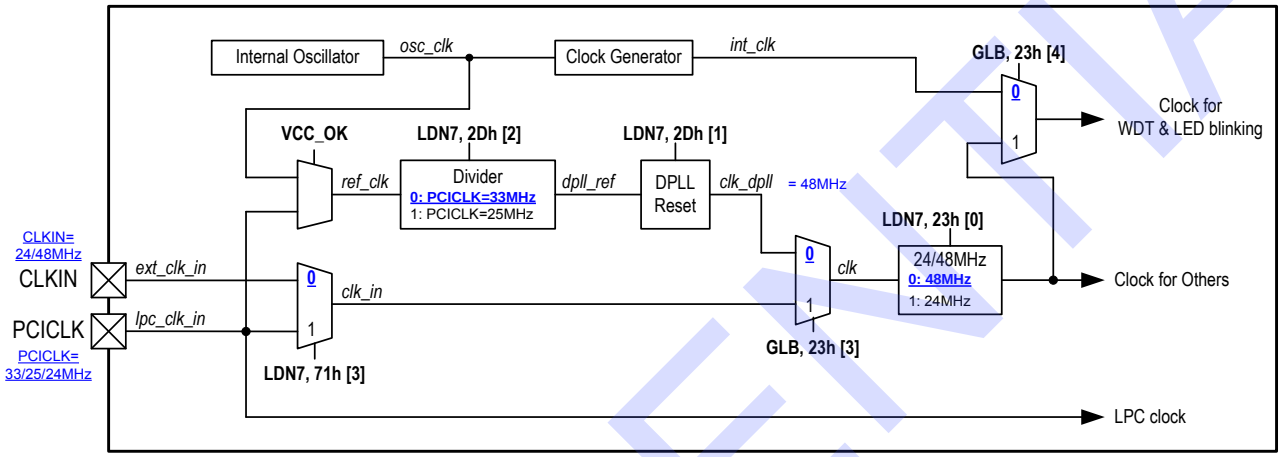

Table 9-1. Internal clk_in Control Table

CLKIN	PCICLK	LDN7\71h[3]	GBL\23h[3]	LDN7\2Dh[2]	LDN7\2Dh[1]	GBL\23h[0]
NC, **(default)**,Note 2	**33Mhz**	**X**	**0**	**0**	**0**	**0**
NC,Note 2	24Mhz	1	1	X	0	1
NC,Note 2	25Mhz	X	0	1	0	0
24MHz	X	0	1	X	0	1
48MHz	X	0	1	X	0	0

Note:
1. X: Don't care.
2. NC: No CLKIN input. CLKIN pin pull-down recommended. Don't make CLKIN pin floating.

CONFIDENTIAL

9.3 Serialized IRQ

The IT8613E follows the specification of Serialized IRQ Support for PCI System, Rev. 6.0, September 1, 1995, to support the serialized IRQ feature, and is able to interface most PC chipsets. The IT8613E encodes the parallel interrupts to an SERIRQ which will be decoded by the chipset with built-in Interrupt Controllers (two 8259 compatible modules).

9.3.1 Continuous Mode

When in the Continuous mode, the SIRQ host initiates the Start frame of each SERIRQ sequence after sending out the Stop frame by itself. (The next Start frame may or may not begin immediately after the turn-around state of the current Stop frame.) The SERIRQ is always activated and SIRQ host keeps polling all the IRQn and system events, even though no IRQn status is changed. The SERIRQ enters the Continuous mode following a system reset.

9.3.2 Quiet Mode

In the Quiet mode, when the situation that one SIRQ Slave detects its input IRQn/events have been changed happens, it may initiate the first clock of Start frame. The SIRQ host can then follow to complete the SERIRQ sequence. In the Quiet mode, the SERIRQ has no activity following the Stop frame until it is initiated by SIRQ Slave, which implies low activity = low mode power consumption.

9.3.3 Waveform Samples of SERIRQ Sequence

Figure 9-2. Start Frame Timing

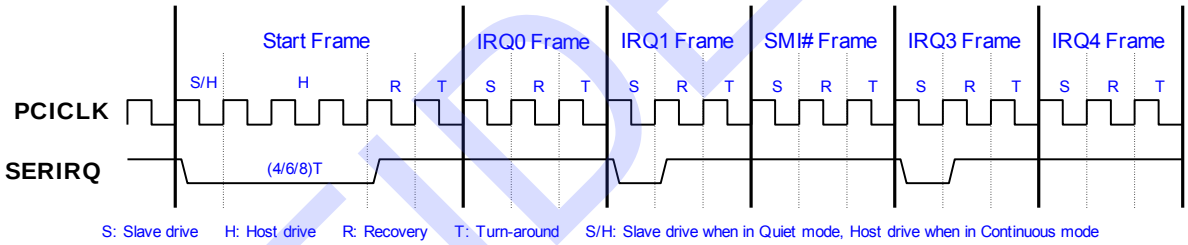

Figure 9-3. Stop Frame Timing

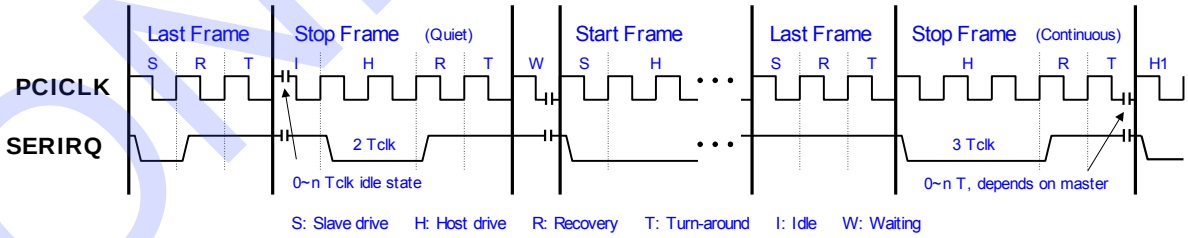

CONFIDENTIAL

9.3.4 SERIRQ Sampling Slot

Slot Number	IRQn/ Events	#of Clocks Past Start	IT8613E
1	IRQ0	2	-
2	IRQ1	5	Y
3	SMI#	8	Y
4	IRQ3	11	Y
5	IRQ4	14	Y
6	IRQ5	17	Y
7	IRQ6	20	Y
8	IRQ7	23	Y
9	IRQ8	26	Y
10	IRQ9	29	Y
11	IRQ10	32	Y
12	IRQ11	35	Y
13	IRQ12	38	Y
14	IRQ13	41	-
15	IRQ14	44	Y
16	IRQ15	47	Y
17	IOCHCK#	50	-
18	INTA#	53	-
19	INTB#	56	-
20	INTC#	59	-
21	INTD#	62	-
32:22	Unassigned	95 / 65	-

CONFIDENTIAL

9.4 General Purpose I/O

The IT8613E provides eight sets of flexible I/O control and special functions for the system designers via a set of multi-functional General Purpose I/O pins (GPIO). The GPIO functions will not be performed unless the related enable bits of the GPIO Multi-function Pin Selection registers (Index 25h, 26h, 27h, 28h and 29h of the Global Configuration Registers) are set. The GPIO functions include the simple I/O function and alternate function, and the function selection is determined by the Simple I/O Enable Registers (LDN=07h, Index=C0h, C1h, C2h, C3h and C4h).

The Simple I/O function includes a set of registers, which correspond to the GPIO pins. All control bits are divided into eight registers. The accessed I/O ports are programmable and are eight consecutive I/O ports (Base Address+0, Base Address+1, Base Address+2, Base Address+3, Base Address+4, Base Address+5, Base Address+6, Base Address+7). Base Address is programmed on the registers of GPIO Simple I/O Base Address LSB and MSB registers (LDN=07h, Index=62h and 63h).

The Alternate function provides several special functions for users, including Watch Dog Timer, SMI# output routing, External Interrupt routing, Panel Button De-bounce, Keyboard Lock input routing, LED Blinking, Thermal output routing, and Beep output routing. The last two are sub-functions of the Hardware Monitor. (GPIO set 6 supports the simple I/O function only.)

The Panel Button De-bounce is an input function. After it is enabled, a related status bit will be set when an active low pulse is detected on the GPIO pin. The status bits will be cleared by writing 1's to them. Panel Button De-bounce Interrupt will be issued if any of the status bit is set. However, the newly set status will not issue another interrupt unless the previous status bit is cleared before being set.

The Key Lock function locks the keyboard to inhibit the keyboard interface. The way of programming is to set bit 2 on the register Index F0h of KBC(Keyboard) (LDN=5). The pin location mapping, Index F7h also must be programmed correctly.

The Blinking function provides a low frequency blink output. By connecting to some external components, it can be used to control a power LED. There are several frequencies for selection.

The Watch Dog Timer (WDT) function is constituted by a time counter, a time-out status register, and the timer reset control logic. The time-out status bit may be mapped to an interrupt or KRST# through the WDT configuration register. The WDT has a programmable time-out ranging from 1 to 65535 minutes or 1 to 65535 seconds. The unit, either a minute or a second, is also programmable via bit 7 of the WDT configuration register. When the WDT Time-out Value register is set to a non-zero value, the WDT loads the value and begin counting down from the value. When the value reaches to 0, the WDT status register will be set. There are several system events including a CIR interrupt, a Keyboard Interrupt, a Mouse Interrupt that can reload the non-zero value into the WDT. The effect on the WDT for each of the events may be enabled or disabled through bits in the WDT control register. No matter what the value in the time counter is, the host may force a time-out to occur by writing a "1" to bit 1 of the WDT configuration register.

The External Interrupt routing function provides a useful feature for motherboard designers. Through this function, the parallel interrupts of other on-board devices can be easily re-routed into the Serial IRQ.

The SMI# is a non-maskable interrupt dedicated to the transparent power management. It consists of different enabled interrupts generated from each of the functional blocks in the IT8613E. The interrupts are redirected as the SMI# output via the SMI# Control Register 1 and SMI# Control Register 2. The SMI# Status Register 1 and 2 are used to read the status of the SMI input event. All the SMI# Status Register bits can be cleared when the corresponding source events become invalidated. These bits can also be cleared by writing 1 to bit 7 of SMI# Control Register 2 no matter whether the events of the corresponding sources are invalidated or not. The SMI# events can be programmed as the pulse mode or level mode whenever an SMI# event occurs. The logic equation of the SMI# event is described below:

SMI# event = (EN_S1IRQ and S1IRQ) or (EN_EC and EC_SMI) or (EN_PBDIRQ or PBDIRQ) or (EN_KIRQ and KIRQ) or (EN_MIRQ and MIRQ) or (EN_CIR and CIR_IRQ) or (EN_WDT and WDT_IRQ)

CONFIDENTIAL

Figure 9-4. General Logic of GPIO Function

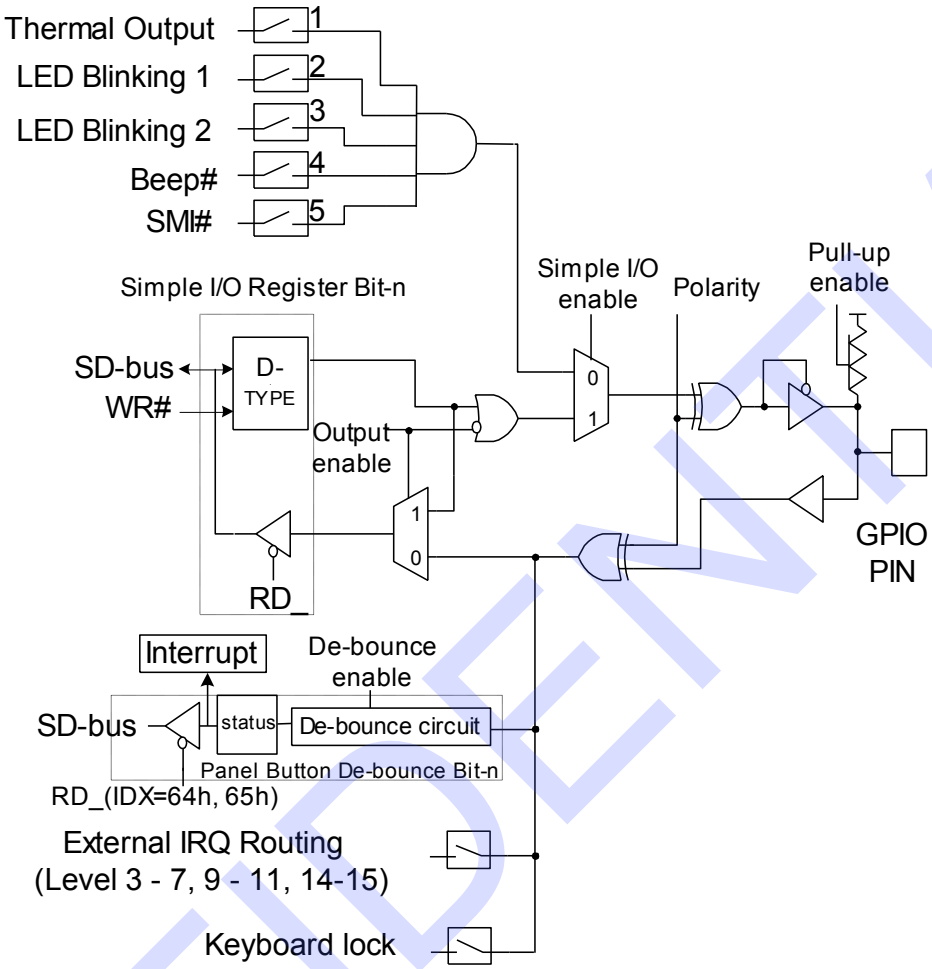

CONFIDENTIAL

9.5 Advanced Power Supply Control and Power Management Event (PME#)

The circuit for advanced power supply control (APC) provides power-up events including Keyboard, Mouse, CIR and RI#. When any of these events is activated, PWRON# will perform a low state until AVCC3 is switched to the ON state.
Here are the details of these events:

1. Detection of KCLK edge or special pattern of KCLK and KDAT. The special pattern of KCLK means pressing pre-set key string sequentially, and KDAT means pressing pre-set keys simultaneously.
2. Detection of MCLK edge or special pattern of MCLK and MDAT. The special pattern of MCLK and MDAT means clicking on any mouse button twice sequentially.
3. Receiving CIR pattern matches the previous one stored at the APC/PME Special Code Index and Data Register.
4. Detection of RI# falling edge.

The PANSWH# and PSON# are especially designed for the system. PANSWH# serves as a main power switch input, which is wire-AND to the APC output PWRON#. PSON# is the ATX Power control output, which is a power-failure gating circuit. The power-failure gating circuit is responsible for gating the SUSB# input until PANSWH# becomes active when the 3VSB is switched from OFF to ON.

The power-failure gating circuit can be disabled by setting the APC/PME Control Register 2 (LDN=04h, index F4h, bit 5). The gating circuit also provides an auto-restore function. After bit 5 of PCR1 is set, the previous PSON# state will be restored when the 3VSB is switched from OFF to ON.

The Mask PWRON# Activation bit (bit 4 of PCR 1) is used to mask all power-up events except switch-on event when the 3VSB state is just switched from FAIL to OFF. In other words, when this bit is set and the power state is switched from FAIL to OFF, the only validated function is PANSWH#.

The PCR2 register is responsible for determining the keyboard power-up event and APC conditions. Bit 4 is used to mask the PANSWH# power-on event on the PWRON# pin. To enable this bit, the keyboard power-up event should be enabled and set by (1) pressing pre-set key string sequentially or (2) stroking pre-set keys simultaneously. The APC/PME# special code index and data registers are used to specify the special key codes in the special power-up events of (1) pressing pre-set key string sequentially or (2) stroking pre-set keys simultaneously.

A CIR event is generated if the input CIR RX pattern is the same as that previously stored at PME Special Code Index and Data Registers (LDN=04h, Index=F5h and F6h). The total maximum physical codes are nineteen bytes (from Index 20h to 32h). The first byte (Index 20h) is used to specify the pattern length (in bytes). Bit 7-4 are used when AVCC3 is on and Bit 3-0 when AVCC3 goes OFF. The length represented in each 4-bit will be incremented by 3 internally as the actual length is to be compared. For most of the CIR protocols, the first several bytes are always the same for each key (or pattern). The differences are always in the last several bytes. Thus, the system designer can program the IT8613E to generate a CIR PME# event as any keys when AVCC3 is ON and a special key (i.e. POWER-ON) when AVCC3 is OFF.

All APC registers (Index=F0h, F2h, F4h, F5h, F6h, FAh and FBh) are powered by back-up power (VBAT) when 3VSB is OFF.

PME# is used to wake up the system from low-power states (S1-S5).There will be five events of APC to generate PME#. A falling edge on these pins issues PME# events if the enable bits are set.

CONFIDENTIAL

9.6 Environment Controller

The Environment Controller (EC), built in the IT8613E, includes seven voltage inputs, two temperature sensor inputs, four FAN Tachometer inputs, and four sets of advanced FAN Controllers. The EC monitors the hardware environment and implements the environmental control for personal computers.

The IT8613E contains an 8-bit ADC (Analog-to-Digital Converter), which is responsible for monitoring the voltages and temperatures. The ADC converts the analog inputs ranging from 0V to 3.3V to 8-bit digital byte. With additional external components, the analog inputs can be made to monitor different voltage ranges, in addition to monitoring the fixed input range of 0V to 3.3V. Through external thermistors or thermal diodes, the temperature sensor inputs can be converted into 8-bit digital byte, enabling the sensor inputs to monitor the temperature of various components. A built-in ROM is also provided to adjust the non-linear characteristics of thermistors.

FAN Tachometer inputs are digital inputs with an acceptable range from 0V to 5V, and are responsible for measuring the FAN's Tachometer pulse periods.

The EC of the IT8613E provides multiple internal registers and an interrupt generator for programmers to monitor the environment and control the FANs. Both of the LPC Bus and Serial Bus interfaces are supported to accommodate the needs for various applications.

9.6.1 Interface

LPC Bus: The Environment Controller of the IT8613E decodes two addresses.

Table 9-2. Address Map on LPC Bus

Register or Port	Address
Address register of EC	Base+05h
Data register of EC	Base+06h

Note 1: The Base Address is determined by the Logical Device configuration registers of the Environment Controller (LDN=04h, registers index=60h, 61h).

To access an EC register, the address of the register is written to the address port (Base+05h). Read or write data from or to that register via data port (Base+06h). For the registers with the same Index, the data can be read respectively by the BANK_SEL register (refer to section 9.5.2.2.7).

9.6.2 Registers

Table below lists all EC (Environment Controller) registers. Some of them such as index 10h~12h, etc. have no default values and these settings have impact on VIN, TEMP, and FAN's detection. Therefore, the mistaken action might happen during the detecting process. In order to prevent these unexpected behaviors happening, it is recommended that the related interrupts or SMI mask registers (04h~09h) be enabled for the unused hardware monitor.

9.6.2.1 Address Port (Base+05h, Default=00h)

Bit	Description
7	**Outstanding; read only** This bit is set when a data write is performed to Address Port via the LPC Bus.
6-0	**Index** Internal Address of RAM and Registers.

CONFIDENTIAL

Table 9-3. Environment Controller Registers (Bank 0)

Note:
The BANK_SEL register (Index06h) must be set to Bank 0 when the following registers.are to be accessed.

Index	R/W	Default	Registers or Action
00h	R/W	18h	Configuration Register
01h	R	00h	Interrupt Status Register 1
02h	R	00h	Interrupt Status Register 2
03h	R	00h	Interrupt Status Register 3
04h	R/W	00h	SMI# Mask Register 1
05h	R/W	00h	SMI# Mask Register 2
06h	R/W	00h	SMI# Mask Register 3
07h	R/W	00h	Interrupt Mask Interrupt Mask 1
08h	R/W	00h	Interrupt Mask Interrupt Mask 2
09h	R/W	C0h	Interrupt Mask Interrupt Mask 3
0Ah	R/W	44h	Interface Selection Register
0Bh	R/W	00h	General Control Register 1
0Ch	R/W	00h	General Control Register 2
0Eh	R	-	Fan Tachometer 2 Reading Register
0Fh	R	-	Fan Tachometer 3 Reading Register
11h	R/W	-	Fan Tachometer 2 Limit Register
12h	R/W	-	Fan Tachometer 3 Limit Register
13h	R/W	00h	Fan Controller Main Control Register
14h	R/W	40h	FAN_CTL Control Register
16h	R/W	00h	FAN_CTL2 PWM Control Register
17h	R/W	00h	FAN_CTL3 PWM Control Register
19h	R	-	Fan Tachometer 2 Extended Reading Register
1Ah	R	-	Fan Tachometer 3 Extended Reading Register
1Ch	R/W	-	Fan Tachometer 2 Extended Limit Register
1Dh	R/W	-	Fan Tachometer 3 Extended Limit Register
1Eh	R/W	00h	FAN_CTL4 PWM Control Register
1Fh	R/W	00h	FAN_CTL5 PWM Control Register
20h	R	-	VIN0 Voltage Reading Register
21h	R	-	VIN1 Voltage Reading Register
22h	R	-	VIN2 Voltage Reading Register
24h	R	-	VIN4 Voltage Reading Register
25h	R	-	VIN5 Voltage Reading Register
27h	R	-	Internal 3VSB Voltage Reading Register
28h	R	-	VBAT Voltage Reading Register
29h	R	-	TMPIN1 Temperature Reading Register
2Ah	R	-	TMPIN2 Temperature Reading Register
2Bh	R	-	TMPIN3 Temperature Reading Register

CONFIDENTIAL

Index	R/W	Default	Registers or Action
2Ch	R	-	TMPIN4 Temperature Reading Register
2Dh	R	-	TMPIN5 Temperature Reading Register
2Eh	R	-	TMPIN6 Temperature Reading Register
2Fh	R	-	AVCC3 Voltage Reading Register
30h	R/W	-	VIN0 High Limit Register
31h	R/W	-	VIN0 Low Limit Register
32h	R/W	-	VIN1 High Limit Register
33h	R/W	-	VIN1 Low Limit Register
34h	R/W	-	VIN2 High Limit Register
35h	R/W	-	VIN2 Low Limit Register
38h	R/W	-	VIN4 High Limit Register
39h	R/W	-	VIN4 Low Limit Register
3Ah	R/W	-	VIN5 High Limit Register
3Bh	R/W	-	VIN5 Low Limit Register
40h	R/W	-	TMPIN1 High Limit Register
41h	R/W	-	TMPIN1 Low Limit Register
42h	R/W	-	TMPIN2 High Limit Register
43h	R/W	-	TMPIN2 Low Limit Register
44h	R/W	-	TMPIN3 High Limit Register
45h	R/W	-	TMPIN3 Low Limit Register
46h	R/W	-	TMPIN4 High Limit Register
47h	R/W	-	TMPIN4 Low Limit Register
50h	R/W	00h	ADC Voltage Channel Enable Register
51h	R/W	00h	ADC Temperature Channel Enable Register
52h	R/W	7Fh	TMPIN1 Thermal Output Limit Register
53h	R/W	7Fh	TMPIN2 Thermal Output Limit Register
54h	R/W	7Fh	TMPIN3 Thermal Output Limit Register
55h	R/W	40h	ADC Temperature Extra Channel Enable Register
56h	R/W	00h	TMPIN1 Zero Degree Adjust Register
57h	R/W	00h	TMPIN2 Zero Degree Adjust Register
58h	R	90h	ITE Vendor ID Register
59h	R/W	00h	TMPIN3 Zero Degree Adjust Register
5Ah	R/W	00h	TMPIN4 Zero Degree Adjust Register
5Bh	R	12h	Core ID Register
5Ch	R/W	60h	Beep Event Enable Register
5Dh	R/W	00h	Beep Frequency Divisor of Fan Event Register
5Eh	R/W	00h	Beep Frequency Divisor of Voltage Event Register
5Fh	R/W	00h	Beep Frequency Divisor of Temperature Event Register

CONFIDENTIAL

Index	R/W	Default	Registers or Action
68h	R/W	7Fh	FAN_CTL2 SmartGuardian Automatic Mode Temperature Limit of OFF Register
69h	R/W	7Fh	FAN_CTL2 SmartGuardian Automatic Mode Temperature Limit of Fan Start Register
6Ah	R/W	7Fh	FAN_CTL2 SmartGuardian Automatic Mode Temperature Limit of Full Speed Register
6Bh	R/W	00h/80h	FAN_CTL2 SmartGuardian Automatic Mode Start PWM Register
6Ch	R/W	00h	FAN_CTL2 SmartGuardian Automatic Mode Control Register
6Dh	R/W	7Fh	FAN_CTL2 SmartGuardian Automatic Mode △-Temperature Register
6Eh	R/W	0Fh	FAN_CTL2 Target Zone Register
70h	R/W	7Fh	FAN_CTL3 SmartGuardian Automatic Mode Temperature Limit of OFF Register
71h	R/W	7Fh	FAN_CTL3 SmartGuardian Automatic Mode Temperature Limit of Fan Start Register
72h	R/W	7Fh	FAN_CTL3 SmartGuardian Automatic Mode Temperature Limit of Full Speed Register
73h	R/W	00h/80h	FAN_CTL3 SmartGuardian Automatic Mode Start PWM Register
74h	R/W	00h	FAN_CTL3 SmartGuardian Automatic Mode Control Register
75h	R/W	7Fh	FAN_CTL3 SmartGuardian Automatic Mode △-Temperature Register
76h	R/W	0Fh	FAN_CTL3 Target Zone Register
78h	R/W	7Fh	FAN_CTL4 SmartGuardian Automatic Mode Temperature Limit of OFF Register
79h	R/W	7Fh	FAN_CTL4 SmartGuardian Automatic Mode Temperature Limit of Fan Start Register
7Ah	R/W	7Fh	FAN_CTL4 SmartGuardian Automatic Mode Temperature Limit of Full Speed Register
7Bh	R/W	00h/80h	FAN_CTL4 SmartGuardian Automatic Mode Start PWM Register
7Ch	R/W	00h	FAN_CTL4 SmartGuardian Automatic Mode Control Register
7Dh	R/W	7Fh	FAN_CTL4 SmartGuardian Automatic Mode △-Temperature Register
7Eh	R/W	0Fh	FAN_CTL4 Target Zone Register
80h	R	-	Fan Tachometer 4 Reading LSB Register
81h	R	-	Fan Tachometer 4 Reading MSB Register
82h	R	-	Fan Tachometer 5 Reading LSB Register
83h	R	-	Fan Tachometer 5 Reading MSB Register
84h	R/W	-	Fan Tachometer 4 Limit LSB Register
85h	R/W	-	Fan Tachometer 4 Limit MSB Register
86h	R/W	-	Fan Tachometer 5 Limit LSB Register
87h	R/W	-	Fan Tachometer 5 Limit MSB Register
88h	R/W	00h	External Temperature Sensor Host Status Register
89h	R/W	00h	External Temperature Sensor Host Target Address Register
8Ah	R/W	00h	External Temperature Sensor Host Write Length Register

CONFIDENTIAL

Index	R/W	Default	Registers or Action
8Bh	R/W	00h	External Temperature Sensor Host Read Length Register
8Ch	R/W	00h	External Temperature Sensor Host Command (Write Data 1) Register
8Dh	R/W	00h	External Temperature Sensor Write Data (2-8) Register
8Eh	R/W	00h	External Temperature Sensor Host Control Register
8Fh	R	--h	External Temperature Sensor Read Data (1-16) Register
90h	R/W	00h	TMPIN5 Zero Degree Adjust Register
91h	R/W	00h	TMPIN6 Zero Degree Adjust Register
98h	R/W	00000b	PCH/SBTSI Host Status Register
99h	R/W	00h	PCH/SBTSI Host Target Address Register
9Ch	R/W	00h	PCH/SBTSI Host Command Register
9Dh	R/W	--h	PCH/SBTSI Write Data Register
9Eh	R/W	00h	PCH/SBTSI Host Control Register
9Fh	R/W	--h	PCH/SBTSI Read Data (1-16) Register
A0h	R/W	7Fh	FAN_CTL5 SmartGuardian Automatic Mode Temperature Limit of OFF Register
A1h	R/W	7Fh	FAN_CTL5 SmartGuardian Automatic Mode Temperature Limit of Fan Start Register
A2h	R/W	7Fh	FAN_CTL5 SmartGuardian Automatic Mode Temperature Limit of Full Speed Register
A3h	R/W	00h/80h	FAN_CTL5 SmartGuardian Automatic Mode Start PWM Register
A4h	R/W	00h	FAN_CTL5 SmartGuardian Automatic Mode Control Register
A5h	R/W	7Fh	FAN_CTL5 SmartGuardian Automatic Mode △-Temperature Register
A6h	R/W	0Fh	FAN_CTL5 Target Zone Register
B4h	R/W	-	TMPIN5 High Limit Register
B5h	R/W	-	TMPIN5 Low Limit Register
B6h	R/W	-	TMPIN6 High Limit Register
B7h	R/W	-	TMPIN6 Low Limit Register
B8h	R/W	-	Second SMBUS MxM Address Register
B9h	R/W	-	Second SMBUS MxM Command Register

CONFIDENTIAL

Table 9-4. Environment Controller Registers (Bank 1)

Note:
The BANK_SEL register (Index06h) must be set to Bank 1 when the following registers are to be accessed.

Index	R/W	Default	Registers or Action
Bank1, C0h	R/W	00h	SB-TSI Auto Control Register
Bank1, C1h	R	--h	Integer Value of SB-TSI Temperature Register
Bank1, C2h	R	--h	Fractional Value of SB-TSI Temperature Register
Bank1, D0h~D8h	R	--h	PCH SM-Link Byte 0 ~ 8 Reading Register
Bank1 D9h~DCh	R	--h	PCH SM-Link Byte 9 ~ 12 Reading Register
Bank1, E0h~FFh	R	--h	PECI Processor 1~8 Domain 0,1 Temperature Reading

Table 9-5. Environment Controller Registers (Bank 2)

Note:
The BANK_SEL register (Index06h) must be set to Bank 2 when the following registers are to be accessed.

Index	R/W	Default	Registers or Action
Bank2, 20h~2Ch	R/W	--h	Fan2 Extra Vector A, B, C
Bank2, 30h~3Ch	R/W	--h	Fan3 Extra Vector A, B, C
Bank2, 40h~4Ch	R/W	--h	Fan4 Extra Vector A, B, C
Bank2, 4Dh<6>	R/W	H	Highest Mode Enable Register
Bank2, 50h~5Ch	R/W	--h	Fan5 Extra Vector A, B, C
Bank2, 70h	R/W	-h	PECI Bridge Write Address Register
Bank2, 71h	R/W	-h	PECI Bridge Read Address Register
Bank2, 72h	R/W	00h	PECI Bridge Control Register
Bank2, 73h	R	-h	PECI Bridge Status Register
Bank2, 74h	R	-h	PECI Bridge Error Code Register
Bank2, 75h	R	-h	PECI Bridge CPU0 Temperature Register
Bank2, 76h	R	-h	PECI Bridge CPU1 Temperature Register

CONFIDENTIAL

9.6.2.2 General Register Description

9.6.2.2.1 Configuration Register (Index=00h, Default=18h)

Bit	R/W	Description
7	R/W	**Initialization** A "1" restores all registers to their individual default values, except the Serial Bus Address register. This bit clears itself when the default value is "0".
6	R/W	**Update VBAT Voltage Reading**
5	R/W	**Reserved**
4	R	**Read only; always "1"**
3	R/W	**INT_Clear** A "1" disables the SMI# and IRQ outputs while the contents of interrupt status bits remain unchanged.
2	R/W	**IRQ Enable** This bit is to enable the IRQ Interrupt output.
1	R/W	**SMI# Enable** A "1" enables the SMI# Interrupt output.
0	R/W	**Start** A "1" enables the startup of monitoring operations and a "0" sets the monitoring operation in the STANDBY mode.

9.6.2.2.2 Interrupt Status Register 1 (Index=01h, Default=00h)

Reading this register will clear itself following a read access.

Bit	R/W	Description
7	R	A "1" indicates the AVCC3 Count limit has been reached.
6	R	A "1" indicates the FAN_TAC5 Count limit has been reached.
5-4	R	**Reserved**
3-1	R	A "1" indicates the FAN_TAC4-2 Count limit has been reached.
0	R	**Reserved**

9.6.2.2.3 Interrupt Status Register 2 (Index=02h, Default=00h)

Reading this register will clear itself after the read operation is completed.

Bit	R/W	Description
5-4	R	A "1" indicates a High or Low limit of VIN5-4 has been reached.
2-0	R	A "1" indicates a High or Low limit of VIN2-0 has been reached.

9.6.2.2.4 Interrupt Status Register 3 (Index=03h, Default=00h)

Reading this register will clear itself following a read access.

Bit	R/W	Description
7	R	**Reserved**
6	R	A "1" indicates a PCH/SBTSI error occurs. For PCH/SBTSI Interrupt & SMI# setting, please refer to Index0Bh[bit2, 1].
5-0	R	A "1" indicates a High or Low limit of Temperature 6-1 has been reached.

CONFIDENTIAL

9.6.2.2.5 SMI# Mask Register 1 (Index=04h, Default=00h)

Bit	R/W	Description
7	R/W	A "1" disables the AVCC3 interrupt status bit for SMI#.
6	R/W	A "1" disables the FAN_TAC5 interrupt status bit for SMI#.
5-4	R/W	**Reserved**
3-1	R/W	A "1" disables the FAN_TAC4-2 interrupt status bit for SMI#.
0	R/W	**Reserved**

9.6.2.2.6 SMI# Mask Register 2 (Index=05h, Default=00h)

Bit	R/W	Description
5-4	R/W	A "1" disables the VIN5-4 interrupt status bit for SMI#.
2-0	R/W	A "1" disables the VIN2-0 interrupt status bit for SMI#.

9.6.2.2.7 SMI# Mask Register 3 (Index=06h, Default=00h)

Bit	R/W	Description
7	R/W	A "1" disables the Temperature 6 interrupt status bit for SMI#.
6-5	R/W	**BANK Selection (BANK_SEL)** This register is for the registers with the same Index to read data respectively. 00b: Bank0, (Index 00h~FFh, default) 01b: Bank1, (Index D0h~DFh) 10b: Bank2, (Index 10h~6Fh) Others: Reserved
4-0	R/W	A "1" disables the Temperature 5-1 interrupt status bit for SMI#.

9.6.2.2.8 Interrupt Mask Register 1 (Index=07h, Default=00h)

Bit	R/W	Description
7	R/W	A "1" disables the AVCC3 interrupt status bit for IRQ.
6	R/W	A "1" disables the FAN_TAC5 interrupt status bit for IRQ.
5-4	R/W	**Reserved**
3-1	R/W	A "1" disables the FAN_TAC4-2 interrupt status bit for IRQ.
0	R/W	**Reserved**

9.6.2.2.9 Interrupt Mask Register 2 (Index=08h, Default=00h)

Bit	R/W	Description
5-4	R/W	A "1" disables the VIN5-4 interrupt status bit for IRQ.
2-0	R/W	A "1" disables the VIN2-0 interrupt status bit for IRQ.

9.6.2.2.10 Interrupt Mask Register 3 (Index=09h, Default=C0h)

Bit	R/W	Description
7	R/W	**Reserved**
6	R/W	**Reserved**
5-0	R/W	A "1" disables the Temperature 6-1 interrupt status bit for IRQ.

CONFIDENTIAL

9.6.2.2.11 Interface Selection Register (Index=0Ah, Default=44h)

Bit	R/W	Description
7	R/W	**Pseudo-EOC (End of Conversion of ADC)** A Pseudo-EOC bit can speed up the setup time of FAN speed in the SmartGuardian automatic mode. (Write 1 to the bit then write 0.)
6	R/W	**External Thermal Sensor SMB Host Enable** 0: SMB Disable 1: SMB Enable
5-4	R/W	**SST/PECI Selection** 00: Disable 01: SST Slave Device 10: PECI Note1 11: SST Host When PECI and SB-TSI functions are used simultaneously, the clock pin of SB-TSI's I/F is SBTSI_C2
3	R/W	**SST/PECI Host Controller Clock Selection** 0: 32MHz generated internally 1: 24MHz
2	R/W	**SST/PECI Host Controller (Auto Speed No-change Tolerance) t-bit 1 Setting** 0: (2 host clocks) no less than 1 host clock 1: (1 host clock) less than 1 host clock
1	R/W	**Reserved** This bit must be set to “0b”
0	R/W	**PECI 2.0/3.0 Host Controller Hardware AWFCS Enable** 0: Disable 1: Enable

9.6.2.2.12 General Control Register 1 (Index=0Bh, Default=00h)

Bit	R/W	Description
7	R/W	**Virtual Temperature 6 Enable (Index 2E)** 0: Disable 1: Enable
6	R/W	**Virtual Temperature 5 Enable (Index 2Dh)** 0: Disable 1: Enable
5	R/W	**Virtual Temperature 3 Enable (Index 2Bh)** 0: Disable 1: Enable
3	R/W	**Reserved**
2	R/W	A “1” enables the PCH/SBTSI interrupt status bit for SMI#.
1	R/W	A “1” enables the PCH/SBTSI interrupt status bit for IRQ.
0	R/W	**Reserved**

CONFIDENTIAL

9.6.2.2.13 General Control Register 2 (Index=0Ch, Default=00h)

Bit	R/W	Description
7	R/W	**TMPIN3 Enhanced Interrupt Mode Enable** 0: Original mode 1: The interrupt will be generated when TMPIN3 is higher than the high limit or lower than the low limit.
6	R/W	**TMPIN2 Enhanced Interrupt Mode Enable** 0: Original mode 1: The interrupt will be generated when TMPIN2 is higher than the high limit or lower than the low limit.
5	R/W	**FAN_TAC5 Enable** 0: Disable 1: Enable
4	R/W	**FAN_TAC4 Enable** 0: Disable 1: Enable
3	R/W	**TMPIN1 Enhanced Interrupt Mode Enable** 0: Original mode 1: The interrupt will be generated when TMPIN1 is higher than the high limit or lower than the low limit.
2	R/W	**TMPIN4 Enhanced Interrupt Mode Enable** 0: Original mode 1: The interrupt will be generated when TMPIN4 is higher than the high limit or lower than the low limit.
1	R/W	**Virtual Temperature 2 Enable (Index 2Ah)** 0: Disable 1: Enable
0	R/W	**Virtual Temperature 1 Enable (Index 29h)** 0: Disable 1: Enable

9.6.2.2.14 Fan Controller Main Control Register (Index=13h, Default=00h)

Bit	R/W	Description
7	R	**SST/PECI Host Controller Transition Speed Mode Selection** 0: Auto 1: 666KHz
6-5	R/W	**FAN_TAC3-2 Enable** 0: Disable 1: Enable
4	R/W	**Reserved**
3	R/W	**Full Speed Control of FAN_CTL Automatic Mode** 0: The full speeds of FAN_CTL2-5 automatic mode are independent. 1: Both FAN_CTL2-5 will enter their respective full speeds when the temperature exceeds the full Speed Temperature Limit.
2	R/W	**Reserved**
1	R/W	**TMPIN6 Enhanced Interrupt Mode Enable** 0: Original mode 1: The interrupt will be generated when TMPIN6 is higher than the high limit or lower than the low limit.
0	R/W	**TMPIN5 Enhanced Interrupt Mode Enable** 0: Original mode 1: The interrupt will be generated when TMPIN6 is higher than the high limit or lower than the low limit.

CONFIDENTIAL

9.6.2.2.15 ADC Temperature Channel Enable Register (Index=51h, Default=00h)

TMPIN3-1 cannot be enabled in both Thermal Resistor mode and Thermal Diode (Diode connected Transistor) mode.

Bit	R/W	Description
7-5	R/W	**Reserved**
4-3	R/W	TMPIN2-1 is enabled in the Thermal Resistor mode.
2	R/W	**Reserved**
1-0	R/W	TMPIN2-1 is enabled in the Thermal Diode (or Diode-connected Transistor) mode.

9.6.2.2.16 TMPIN3-1 Thermal Output Limit Registers (Index=54h-52h, Default=7Fh)

Bit	R/W	Description
7-0	R/W	**Thermal Output Limit Value**

9.6.2.2.17 ADC Temperature Extra Channel Enable Register (Index=55h, Default=40h)

Bit	R/W	Description
7	R/W	**Virtual Temperature 4 Enable (Index 2Ch)** 0: Disable 1: Enable
6-4	R/W	**FAN_CTRL2 PWM Base Clock Select** 000: 48MHz (PWM Frequency=187.5kHz) 001: 24MHz (PWM Frequency=93.75kHz) 010: 12MHz (PWM Frequency=46.87kHz) 011: 8MHz (PWM Frequency=31.25kHz) 100: 6MHz (PWM Frequency=23.43kHz) (Default) 101: 3MHz (PWM Frequency=11.7kHz) 110: 1.5MHz (PWM Frequency=5.86kHz) 111: 51kHz (PWM Frequency=200Hz)
3	R/W	**FAN_CTRL2 PWM Minimum Duty Select** 0: 0 % For a given PWM value, the actual duty is PWM/256 X 100%. 1: 20 % For a given PWM value (except 00h), the actual duty is (PWM+64)/320 X 100%. If the given PWM value is 00h, the actual duty will be 0%.
2	R/W	**Reserved**
1-0	R/W	VIN5-4 is enabled in the Thermal Resistor mode.

CONFIDENTIAL

9.6.2.2.18 Beep Event Enable Register (Index=5Ch, Default=60h)

Bit	R/W	Description
7	R/W	**Thermal Diode Zero Degree Adjust Register Write Enable**
6-4	R/W	**ADC Clock Selection** 000: 500kHz 001: 250kHz 010: 125K 011: 62.5kHz 100: 31.25kHz 101: 24MHz 110: 1MHz(Default) 111: 2MHz
3	R/W	**Reserved**
2	R/W	This bit can enable the beep action when TMPINs exceed the limit
1	R/W	This bit can enable the beep action when VINs exceed the limit.
0	R/W	This bit can enable the beep action when FAN_TACs exceed the limit.

9.6.2.2.19 Beep Frequency Divisor of Fan Event Register (Index=5Dh, Default=00h)

Bit	R/W	Description
7-4	R/W	**Tone Divisor** Tone=500/(bits[7:4]+1)
3-0	R/W	**Frequency Divisor** Frequency=10K/(bits[3:0]+1)

9.6.2.2.20 Beep Frequency Divisor of Voltage Event Register (Index=5Eh, Default=00h)

Bit	R/W	Description
7-4	R/W	**Tone Divisor** Tone=500/(bits[7:4]+1).
3-0	R/W	**Frequency Divisor** Frequency=10K/(bits[3:0]+1)

9.6.2.2.21 Beep Frequency Divisor of Temperature Event Register (Index=5Fh, Default=00h)

Bit	R/W	Description
7-4	R/W	**Tone Divisor** Tone=500/(bits[7:4]+1)
3-0	R/W	**Frequency Divisor** Frequency=10K/(bits[3:0]+1)

9.6.2.2.22 Vendor ID Register (Index=58h, Default=90h)

Bit	R/W	Description
7-0	R	**ITE Vendor ID; read Only**

9.6.2.2.23 Code ID Register (Index=5Bh, Default=12h)

Bit	R/W	Description
7-0	R	**ITE Vendor ID; read Only**

CONFIDENTIAL

9.6.2.3 FAN Controller Register Description

9.6.2.3.1 Fan Tachometer 2-5 Reading Registers (Index=0Eh-0Fh, 19h-1Ah, 80h-83h)

These registers indicate the count numbers of the internal clock per revolution [15-0]

FAN Channel	R/W	FAN Tachometer Reading (MSB)	FAN Tachometer Reading (LSB)	Default Value
FAN2	R	19h	0Eh	-
FAN3	R	1Ah	0Fh	-
FAN4	R	81h	80h	-
FAN5	R	83h	82h	-

9.6.2.3.2 Fan Tachometer 2-5 Limit Registers (Index=11h-12h, 1Ch-Dh, 84h-87h)

These registers indicate the fan limit value [15-0].

FAN Channel	R/W	FAN Tachometer Reading (MSB)	FAN Tachometer Reading (LSB)	Default Value *Note
FAN2	R/W	1Ch	11h	-
FAN3	R/W	1Dh	12h	-
FAN4	R/W	85h	84h	-
FAN5	R/W	87h	86h	-

Note:
These registers have no default values and these settings have impact on VIN, TEMP, and FAN's detection. Therefore, the mistaken action might happen during the detecting process. In order to prevent these unexpected behaviors happening, it is recommended that the related interrupts or SMI mask registers (04h~09h) be enabled for the unused hardware monitor.

9.6.2.3.3 Fan Tachometer 2-5 Enable Registers

These registers indicate the FAN_TAC enable/disable.

FAN Channel	R/W	FAN Tachometer Enable	Default Value
FAN2	R/W	13h[5]	0b
FAN3	R/W	13h[6]	0b
FAN4	R/W	0Ch[4]	0b
FAN5	R/W	0Ch[5]	0b

9.6.2.3.4 FAN_CTL Control Register (Index=14h, Default=40h)

Bit	R/W	Description
7	R/W	**FAN_CTL Polarity (for all FANs)** 0: Active low (Default) 1: Active high
6-4	R/W	**PWM Base Clock Select (for FAN3, 4, 5)** 000: 48MHz (PWM Frequency=187.5kHz) 001: 24MHz (PWM Frequency=93.75kHz) 010: 12MHz (PWM Frequency=46.87kHz) 011: 8MHz (PWM Frequency=31.25kHz) 100: 6MHz (PWM Frequency=23.43kHz) (Default) 101: 3MHz (PWM Frequency=11.7kHz) 110: 1.5MHz (PWM Frequency=5.86kHz) 111: 51kHz (PWM Frequency=200Hz)

CONFIDENTIAL

Bit	R/W	Description
3	R/W	**PWM Minimum Duty Select (for FAN3, 4, 5)** 0: 0 % For a given PWM value, the actual duty is PWM/256 X 100%. 1: 20 % For a given PWM value (except 00h), the actual duty is (PWM+64)/320 X 100%. If the given PWM value is 00h, the actual duty will be 0%.
2-0	R/W	**Reserved**

9.6.2.3.5 FAN_CTL 1-6 PWM Control Register (Index=16h,17h, 1Eh,1Fh)

Table 9-6. FAN_CTL 2-5 PWM Control Register

FAN Channel	R/W	Register Index	Default Value
FAN2	R/W	16h	00h
FAN3	R/W	17h	00h
FAN4	R/W	1Eh	00h
FAN5	R/W	1Fh	00h

Bit	R/W	Description
7	R/W	**FAN_CTL PWM Mode Automatic/Software Operation Selection** 0: Software operation 1: Automatic operation
6-0	R/W	**When bit 7 =0:** **Bit 7-0 of Index 6Bh, 73h, 7Bh, A3h: 256 Steps of PWM Control When in Software Operation** **When bit 7 =1:** **Bit 6: Reserved** **Bit 5-3: Temperature Input Selection** (refer to Table 9-10) 000: TMPIN1 (29h) 001: TMPIN2 (2Ah) 010: TMPIN3 (2Bh) 011: TMPIN4 (2Ch) 100: TMPIN5 (2Dh) 101: TMPIN6 (2Eh) 110: the Highest temperature of 2Dh and 2Eh others: Reserved **Bit 2: Tachometer Closed-loop Mode Enable Bit** 0: Disable 1: Enable **Bit 1-0: Reserved**

CONFIDENTIAL

9.6.2.3.6 FAN_CTL5-2 SmartGuardian Automatic Mode Smoothing Control Registers

Table 9-7. FAN 2-5 Smoothing Control Registers

FAN Channel	R/W	Register Index	Default Value
FAN2	R/W	Bank2, 5Eh[5-0]	00h
FAN3	R/W	Bank2, 5Fh[5-0]	00h
FAN4	R/W	Bank2, 6Dh[5-0]	00h
FAN5	R/W	Bank2, 6Eh[5-0]	00h

Table 9-8. Smoothing Frequency Selection Table

EC Bank-2 5Dh, 5Eh, 5Fh 6Dh, 6Eh, 6Fh [bit5-0]	Frequency	Time/per step	Note
000000(00h)	2kHz/1	0.5ms*1	
000001(01h)	2kHz/2	0.5ms*2	
000010(02h)	2kHz/3	0.5ms*3	
……			
111001(39h)	2kHz/58	0.5ms*58	
111010(3Ah)	2kHz/59	0.5ms*59	
111011(3Bh)	2kHz/60	0.5ms*60	
111100(3Ch)	1Hz	1000ms	Default
111101(3Dh)	16Hz	62.5ms	
111110(3Eh)	8Hz	125ms	
111111(3Fh)	4Hz	250ms	

9.6.2.3.7 FAN_CTL5-2 SmartGuardian Automatic Mode Temperature Limit of OFF Registers (Index=A0h, 78h, 70h, 68h, Default=7Fh)

This register is Temperature Limit Value of Fan OFF

FAN Channel	R/W	Register Index	Default
FAN2	R/W	68h	7Fh
FAN3	R/W	70h	7Fh
FAN4	R/W	78h	7Fh
FAN5	R/W	A0h	7Fh

9.6.2.3.8 FAN_CTL5-2 SmartGuardian Automatic Mode Temperature Limit of Fan Start Registers (Index= A1h, 79h, 71h, 69h, Default=7Fh)

This register is Temperature Limit Value of Fan Start

FAN Channel	R/W	Register Index	Default
FAN2	R/W	69h	7Fh
FAN3	R/W	71h	7Fh
FAN4	R/W	79h	7Fh
FAN5	R/W	A1h	7Fh

CONFIDENTIAL

9.6.2.3.9 FAN_CTL5-2 SmartGuardian Automatic Mode Temperature Limit of Full Speed Registers (Index= A2h, 7Ah, 72h, 6Ah, Default=7Fh)

This register is Temperature Limit Value of Fan Full Speed

FAN Channel	R/W	Register Index	Default
FAN2	R/W	6Ah	7Fh
FAN3	R/W	72h	7Fh
FAN4	R/W	7Ah	7Fh
FAN5	R/W	A2h	7Fh

9.6.2.3.10 FAN_CTL5-2 SmartGuardian Automatic Mode Start PWM Registers (Index= A3h, 7Bh, 73h, 6Bh, Default=00h/80h)

FAN Channel	R/W	Register Index	Default
FAN2	R/W	6Bh	80h
FAN3	R/W	73h	80h
FAN4	R/W	7Bh	80h
FAN5	R/W	A3h	80h

For Original Fan Control Mode:

Bit	R/W	Description
7-0	R/W	**When bit 7 of index 16h, 17h, 1Eh, 1Fh =0:** 256 Steps of PWM Control When in Software Operation **When bit 7 of index 16h, 17h, 1Eh, 1Fh =1:** PWM Value

For Tachometer Closed-loop Mode:

Bit	R/W	Description
7-0	R/W	**Initial Value of Target RPM** RPM = 32 * Bit[7:0]

9.6.2.3.11 FAN_CTL5-2 SmartGuardian Automatic Mode Control Registers (Index= A4h, 7Ch, 74h, 6Ch, Default=00h)

FAN Channel	R/W	Register Index	Default
FAN2	R/W	6Ch	00h
FAN3	R/W	74h	00h
FAN4	R/W	7Ch	00h
FAN5	R/W	A4h	00h

For Original Fan Control Mode:

Bit	R/W	Description
7	R/W	**FAN Smoothing** This bit enables the FAN PWM smoothing change. 0: Disable 1: Enable
6-0	R/W	**Slope PWM Bit[6:0]** Slope = (Slope PWM bit[6:3] + Slope PWM bit[2:0] / 8) PWM value/℃

CONFIDENTIAL

For Tachometer Closed-loop Mode:

Bit	R/W	Description
5-0	R/W	**Slope of Target RPM** Slope = 8 * Bit[5:0] (RPM/℃)

9.6.2.3.12 FAN_CTL5-2 SmartGuardian Automatic Mode △-Temperature Registers (Index= A5h, 7Dh, 75h, 6Dh)

FAN Channel	R/W	Register Index	Default
FAN2	R/W	6Dh	00h
FAN3	R/W	75h	00h
FAN4	R/W	7Dh	00h
FAN5	R/W	A5h	00h

Bit	R/W	Description
7	R/W	**Direct-Down Control** This bit is to determine the PWM linear changing decreasing mode. 0: Slow decreasing mode 1: Direct decreasing mode
6	R/W	**FAN Full Limit Control as Thermal out Reached** When the relevant enable bit is set and the FAN output mode is selected as Automatic mode by bit7 of EC index 16h, 17h, 1Eh, 1Fh the corresponding FAN output will be forced to full PWM if any thermal output limit is reached. 0: Disable 1: Enable
5	-	**Reserved**
4-0	R/W	**△-Temperature Interval [4:0]**

9.6.2.3.13 FAN_CTL5-2 Target Zone Registers (Index= A6h, 7Eh, 76h, 6Eh)

FAN Channel	R/W	Register Index	Default
FAN2	R/W	6Eh	0Fh
FAN3	R/W	76h	0Fh
FAN4	R/W	7Eh	0Fh
FAN5	R/W	A6h	0Fh

For Tachometer Closed-loop Mode:

Bit	R/W	Description
3-0	R/W	**Target Zone Boundary** Target Zone = Target RPM +/- (8 * bit[3:0]) (RPM/℃)

9.6.2.3.14 FAN_CTL5-2 PWM Duty Reading Registers (Index= A7h, 7Fh, 77h, 6Fh)

FAN Channel	R/W	Register Index	Default
FAN2	R	6Fh	-
FAN3	R	77h	-
FAN4	R	7Fh	-
FAN5	R	A7h	-

CONFIDENTIAL

9.6.2.3.15 Extra Vector Registers

Table 9-9. FAN Extra-Vector Registers

Note: These registers are in Bank 2.

	Ex-Vector	Extra-Vector Enable	START Limit	Temperature Input	Positive/ Negative Slope	Slope value	Range	Full Limit
FAN2	A	21h[7]	20h	22h[7-5]	23h[7]	21h[6-0]	23h[6-0]	N/A
	B	25h[7]	24h	26h[7-5]	27h[7]	25h[6-0]	27h[6-0]	N/A
	C	29h[7]	28h	2Ah[7-5]	2Bh[7]	29h[6-0]	2Bh[6-0]	2Ch
FAN3	A	31h[7]	30h	32h[7-5]	33h[7]	31h[6-0]	33h[6-0]	N/A
	B	35h[7]	34h	36h[7-5]	37h[7]	35h[6-0]	37h[6-0]	N/A
	C	39h[7]	38h	3Ah[7-5]	3Bh[7]	39h[6-0]	3Bh[6-0]	3Ch
FAN4	A	41h[7]	40h	42h[7-5]	43h[7]	41h[6-0]	43h[6-0]	N/A
	B	45h[7]	44h	46h[7-5]	47h[7]	45h[6-0]	47h[6-0]	N/A
	C	49h[7]	48h	4Ah[7-5]	4Bh[7]	49h[6-0]	4Bh[6-0]	4Ch
FAN5	A	51h[7]	50h	52h[7-5]	53h[7]	51h[6-0]	53h[6-0]	N/A
	B	55h[7]	54h	56h[7-5]	57h[7]	55h[6-0]	57h[6-0]	N/A
	C	59h[7]	58h	5Ah[7-5]	5Bh[7]	59h[6-0]	5Bh[6-0]	5Ch

Start Limit Registers

Bit	R/W	Description
7-0	R/W	**Temperature Limit Value of Fan Start**

Slope Registers

Bit	R/W	Description
6-0	R/W	**For Original Fan Control Mode: Slope PWM Bit[6:0]** Slope = (Slope PWM bit[6:3] + Slope PWM bit[2:0] / 8) PWM value/℃ **For Tachometer Closed-Loop Mode: Slope of RPM** Slope = 8 * Bit[6:0] (RPM/℃)

Temperature Input Registers

Bit	R/W	Description
7-5	R/W	**Temperature Input Select** 000: TMPIN1 001: TMPIN2 010: TMPIN3 011: TMPIN4 100: TMPIN5 101: TMPIN6

Positive/Negative Slop & Range Selection Registers

Bit	R/W	Description
7	R/W	**Positive/Negative Slope selection** This bit provides selection for that the slope value in Special FAN Control Mode Extra Vector is positive or negative. 0: Postive 1: Negive
6-0	R/W	**Range Selection [6:0]** These bits determine the extra vector range after the temperature limit. If the input temperature > (temperature limit + Range[6:0]), the vector will equal the value of (temperature limit + Range[6:0]). If Range[6:0]=00h, it means no range limit.

CONFIDENTIAL

Full Limit Registers (Extra Vector C only)

Bit	R/W	Description
7-0	R/W	**Temperature Limit Value of Fan Full Speed**

9.6.2.4 ADC Controller Register Description

9.6.2.4.1 VIN5-0 Voltage Reading Registers (Index=25h-20h)

VIN Channel	R/W	Voltage Register Index	Note
VIN0	R	20h	1
VIN1	R	21h	1
VIN2	R	22h	1
VIN4	R	24h	1
VIN5	R	25h	1
Internal 3VSB	R	27h	2
VBAT	R	28h	2
Internal AVCC3	R	2Fh	2

Note1: The voltage = reading value * 10.9mV
Note2: For Internal 3VSB voltage, the 3VSB voltage = reading value * 2 * 10.9mV

9.6.2.4.2 ADC Voltage Channel Enable Register (Index=50h, Default=00h)

Bit	R/W	Description
5-4	R/W	**ADC VIN5-4 Scan Enable**
2-0	R/W	**ADC VIN2-0 Scan Enable**

9.6.2.4.3 VIN High/Low Limit Registers (VINHLR), (Index=30h-3Fh, Default = 00h)

VIN Channel	R/W	High Limit Register Index	Low Limit Register Index
VIN0	R/W	30h	31h
VIN1	R/W	32h	33h
VIN2	R/W	34h	35h
VIN4	R/W	38h	39h
VIN5	R/W	3Ah	3Bh
Internal 3VSB	R/W	3Eh	3Fh

9.6.2.5 Temperature Register Description

9.6.2.5.1 TMPIN1-6 Reading Registers (Index=29h-2Eh)

Table 9-10. TMPIN Source Selection Table

TMPIN Source	TMPIN Source Selection – 1 (TSS1) Refer to Table 9-11	TMPIN Source Selection- 2 (TSS2) Refer to Table 9-11 & Table 9-12
TMPIN1 (29h)	Bank2,1Dh[3-0], default=0000b	Bank2,3Dh[0], default=0b
TMPIN2 (2Ah)	Bank2,1Dh[7-4], default=0000b	Bank2,3Dh[1], default=0b
TMPIN3 (2Bh)	Bank2,1Eh[3-0], default=0000b	Bank2,3Dh[2], default=0b
TMPIN4 (2Ch)	Bank2,1Eh[7-4], default=0000b	Bank2,3Dh[3], default=0b
TMPIN5 (2Dh)	Bank2,1Fh[3-0], default=0000b	Bank2,3Dh[4], default=0b
TMPIN6 (2Eh)	Bank2,1Fh[7-4], default=0000b	Bank2,3Dh[5], default=0b

CONFIDENTIAL

Table 9-11. TMPIN Source Selection – 1 (TSS1)

Bit[3-0]	TMPIN Source		Switch Register
0000	TMPIN1(TD1)	TMPIN1(TR1)	51h[bit 0 & 3]
0001	TMPIN2(TD2)	TMPIN2(TR2)	51h[bit 1 & 4]
0010	Reserved	Reserved	51h[bit 2 & 5]
0011	SB-TSI / SM-Host	Reserved	Refer to Table 9-12 TSS2
0100	PECI1(0x30) Domain0	Reserved	Refer to Table 9-12 TSS2
0101	PECI2(0x31) Domain0	Reserved	Refer to Table 9-12 TSS2
0110	PECI3(0x32) Domain0	Reserved	Refer to Table 9-12 TSS2
0111	PECI4(0x33) Domain0	Reserved	Refer to Table 9-12 TSS2
1000	PECI5(0x34) Domain0	2nd AMD GPU Temperature, for Solar Family	Refer to Table 9-12 TSS2
1001	PCH from SM-Link (Data 0)	2nd AMD GPU, Temperature for EveryGreen Family	N/A
1010	PCH from SM-Link (Data 1)	1st AMD GPU Temperature for Solar Family	9Eh[bit 1]=1
1011	MCH from SM-Link	1st AMD GPU Temperature for Everygreen Family	9Eh[bit 1]=1
1100	DIMM0 from SM-Link	AMD CPU DTS(SB-TSI)	Refer to Table 9-11 TSS2
1101	DIMM1 from SM-Link	MxM GPU	Refer to Table 9-11 TSS2
1110	DIMM2 from SM-Link	PECI Bridge PECI0	Bank2, 72h[bit 1]=1 , 72h[bit 2=0]
1111	DIMM3 from SM-Link	PECI Bridge PECI 0&1	Bank2, 72h[bit 1]=1 , 72h[bit 2=1]

Table 9-12. TMPIN Source Selection – 2 (TSS2)

TMPIN Source Selection 2	
Register = '0b'	**Register = '1b'**
SB-TSI / SM-Host	Reserved
PECI1(0x30) Domain0	Reserved
PECI2(0x31) Domain0	Reserved
PECI3(0x32) Domain0	Reserved
PECI4(0x33) Domain0	Reserved
PECI5(0x34) Domain0	2nd AMD GPU Temperature, for Solar Family
PCH from SM-Link (Data 0)	2nd AMD GPU, Temperature for EveryGreen Family
PCH from SM-Link (Data 1)	N/A
MCH from SM-Link	N/A
DIMM0 from SM-Link	AMD CPU DTS(SB-TSI)
DIMM1 from SM-Link	MxM GPU

9.6.2.5.2 TMPIN1-6 High/Low Limit Registers

TMPIN Channel	R/W	High Limit Register	Low Limit Register	Offset Adjust Register (*Note1) Index, default
TMPIN1	R/W	40h	41h	56h, 00h
TMPIN2	R/W	42h	43h	57h, 00h
TMPIN3	R/W	44h	45h	59h, 00h
TMPIN4	R/W	46h	47h	5Ah, 00h
TMPIN5	R/W	B4h	B5h	90h, 00h
TMPIN6	R/W	B6h	B7h	91h, 00h

Note1: These registers are **read only** unless bit 7 of 5Ch is set.

CONFIDENTIAL

9.6.2.6 External Temperature Sensor Register Description

9.6.2.6.1 External Temperature Sensor Host Status Register (Index=88h, Default= -00h)

Bit	R/W	Description
7	R/W	**Data FIFO Pointer Clear** Writing 1 clears the Read/Write Data FIFO pointers. 0: No action It always reports 0 when reading it. 1: Both Read and Write Data FIFO pointers cleared Read Data register will point to Read Data 1, and Write Data register will point to Write Data 2.
6	R/WC	**SST Bus Abnormal/Contention Error** This bit reports the SST/PECI line status. 0: No error 1: Abnormal/Contention error
5	R/WC	**SST Slave Message Phase t-bit Extend over Error/SST or PECI Received Error Code** This bit reports the SST/PECI line status and received error code (8000h-81FFh). 0: No error 1: Error found
4	R/WC	**SST/PECI Line High-Z Status/Failed** This bit reports the SST/PECI line High-Z status. 0: SST/PECI line does not drive High-Z. 1: SST/PECI line drives High-Z.
3	R/WC	**Write_FCS_ERR** Writing 1 clears this bit. In the SST/PECI mode, it reports Write FCS error. 0: No Error 1: Write FCS error
2	R/WC	**NotValid/Read_FCS_ERR** Writing 1 clears this bit. In the SST/PECI mode, it reports Read FCS error. 0: No Error 1: Read FCS error
1	R/WC	**Finish (FNSH)** Writing 1 clears this bit. 0: None 1: This bit is set when the stop condition is detected.
0	R	**Host Busy (BUSY)** 0: The current transaction is completed. 1: This bit is set while the command is in operation.

9.6.2.6.2 External Temperature Sensor Host Target Address Register (Index=89h, Default=00h)

Bit	R/W	Description
7-0	R/W	**Host Target Address Register (HAddr [7:0])** This register is the Target Address field of the SST/PECI protocol.

9.6.2.6.3 External Temperature Sensor Host Write Length Register (Index=8Ah, Default=00h)

Bit	R/W	Description
7-0	R/W	**Host Write Length Register (HW_length [7:0])** This register is the Write Length field of the SST/PECI protocol.

CONFIDENTIAL

9.6.2.6.4 External Temperature Sensor Host Read Length Register (Index=8Bh, Default=00h)

Bit	R/W	Description
7-0	R/W	**Host Read Length Register (HR_length [7:0])** This register is the Read Length field of the SST/PECI protocol.

9.6.2.6.5 External Temperature Sensor Host Command (Write Data 1) Register (Index=8Ch, Default=00h)

Bit	R/W	Description
7-0	R/W	**Host Command Register (HCMD [7:0])** This register is the command field of the protocol. In the PECI/SST mode, it is the command (Write Data 1) byte.

9.6.2.6.6 External Temperature Sensor Write Data (2-8) Register (Index=8Dh, Default=--h)

Bit	R/W	Description
7-0	R/W	**Write Data (2-8) [7:0] (in SST/PECI mode)** This is a 16-byte FIFO register, which is only valid in the PECI/SST mode.

9.6.2.6.7 External Temperature Sensor Host Control Register (Index=8Eh, Default=00h)

Bit	R/W	Description
7-6	R/W	**Auto-Start Control (Auto-START)** The host will start the transaction in a regular rate automatically. 00: 32 Hz 01: 16 Hz 10: 8 Hz 11: 4 Hz
5	R/W	**Auto-Start (Auto-START)** 0: Disable 1: Enable The host will start the transaction in a regular rate, which is determined by bit [6:5] automatically.
4	R/W	**SST/PECI Host Auto-abort at FCS Error** This bit enables the SST/PECI host to abort the transaction when an error occurs to FCS. 0: Disable 1: Enable
3	R/W	**Multi PECI Scan Enable** 0: Disable 1: Enable
2	R/W	**SST**/PECI **Contention Control** This bit enables the SST/PECI bus contention control. 0: Disable 1: Enable When the SST/PECI bus is contentious, the host will abort the transaction.
1	R/W	**SST/PECI_idle_High** This bit sets the SST/PECI bus idle-high in the SST/PECI host mode. 0: SST/PECI idle low 1: SST/PECI idle high

CONFIDENTIAL

Bit	R/W	Description
0	R/W	**Start (START)** This bit is **write-only**. Writing 0 to it during transaction will issue a “kill process” and bit 4 of 88h register will be set. Writing 1 to it during the “NOT BUSY” state (bit 0 of 88h = 0) will start a transaction. Writing 1 to it during the “BUSY” state (bit 0 of 88h = 1) will not issue any transaction. So, the programmer should check the “BUSY” status before issuing a transaction. 0: This bit always returns 0 at read. 1: When this bit is set, the host controller will perform the transaction.

9.6.2.6.8 External Temperature Sensor Read Data (1-16) Register (Index=8Fh, Default=--h)

Bit	R/W	Description
7-0	R/W	**Read Data (1-16) [7:0]** This is a 32-byte FIFO register.

9.6.2.6.9 PCH/SBTSI Host Status Register (Index=98h, Default=---00000b)

Bit	R/W	Description
7	R/W	**Data FIFO Pointer Clear** Writing 1 clears Read/Write Data FIFO pointers. 0: No action It always reports 0 when reading it. 1: Both Read and Write Data FIFO pointers cleared Read Data register will point to Read Data 1, and Write Data register will point to Write Data 2.
6	R/W	**Bus Selection** This bit selects the SMB host protocol. 0: PCH SM-Link 1: SBTSI
5	R/WC	**Reserved**
4	R/WC	**Transmission Killed** Writing 0 to bit 0 of 9Eh during transaction will issue a “kill process” and then this bit will be set.
3	R/WC	**Bus Error** 0: No Error 1: Error
2	R/WC	**Data Valid** Writing 1 clears this bit. In the SBTSI mode, it reports the valid bit of Data phase. If this bit is set to 0(valid data =0), the data is valid. 0: Data valid 1: Data invalid
1	R/WC	**Finish (FNSH)** Writing 1 clears this bit. 0: None 1: This bit is set when the stop condition is detected.
0	R	**HOST Busy (BUSY)** 0: The current transaction is completed. 1: This bit is set while the command is in operation.

CONFIDENTIAL

9.6.2.6.10 PCH/SBTSI Host Target Address Register (Index=99h, Default=00h)

Bit	R/W	Description
7-0	R/W	**Host Target Address Register (HAddr [7:0])** This register is the Target Address field of the PCH/SBTSI protocol.

9.6.2.6.11 PCH/SBTSI Host Command Register (Index=9Ch, Default=00h)

Bit	R/W	Description
7-0	R/W	**Host Command Register (HCMD [7:0])** This register is the command field of the protocol. In the SBTSI mode, it is the Command field. If the host controller is busy, the value of this register cannot be changed or the host will send the wrong command. If the value is out of definition (for example, 03h to FFh for SBTSI protocol), the host will transfer it to the normal value and no error will be detected by the host controller.

9.6.2.6.12 PCH/SBTSI Write Data Register (Index=9Dh, Default=--h)

Bit	R/W	Description
7-0	R/W	**Write Data** This is a 16-byte FIFO register.

9.6.2.6.13 PCH/SBTSI Host Control Register (Index=9Eh, Default=00h)

Bit	R/W	Description
7-6	R/W	**Auto-Start Control (Auto-START)** The host will start the transaction in a regular rate automatically. 00: Disable auto-start 01: 1 Hz 10: 2 Hz 11: 4 Hz
5-4	R/W	**DTS Multi-scan Selection** This function 00: PCH SM-Link, AMD GPU (Block Read, Block Read) 01: PCH SM-Link, MxM GPU (Block Read, Byte Read) 10: AMD SB-TSI, AMD GPU (Byte Read, Block Read) 11: AMD SB-TSI, MxM GPU (Byte Read, Byte Read)
3	R/W	**DTS Multi-scan Enable** 0: Disable 1: Enable For detail programming procedure, please refer to Figure 9-21. PCH SM-Link Programming Procedure for the detail.
2	R/W	**SBTSI Clock Selection** 0: 100 kbits/s 1: 400 kbits/s
1	R/W	**1st AMD GPU Temperature Selection** 0: Disable 1: Enable **SBTSI_byte_sel** This bit selects 8/16 bit data in the SBTSI mode. 0: SBTSI 8-bit data 1: SBTSI 16-bit data

CONFIDENTIAL

Bit	R/W	Description
0	R/W	**Start (START)** This bit is **write-only**. Writing 0 to it during transaction will issue a “kill process” and bit 4 of 98h register will be set. Writing 1 to it during the “NOT BUSY” state (bit 0 of 98h = 0) will start a transaction. Writing 1 to it during the “BUSY” state (bit 0 of 98h = 1) will not issue any transaction. So, the programmer should check whether the status is “BUSY” before issuing a transaction. 0: This bit always returns 0 at read. 1: When this bit is set, the host controller will perform the transaction.

9.6.2.6.14 PCH/SBTSI Read Data (1-16) Register (Index=9Fh, Default=--h)

Bit	R/W	Description
7-0	R/W	**Read Data (1-16) [7:0]** This is a 21-byte FIFO register.

9.6.2.6.15 SB-TSI Auto-run Control Register (Index=C0h, BANK1, Default=--h)

Bit	R/W	Description
7-2	R/W	**Reserved**
1	R/W	**PCH/SB-TSI Error Reset Register** 0: Diabble 1: Enable
0	R/W	**SB-TSI Auto-run Fraction Value Control Register** 0: Diabble Fractional Value 1: Enable Fractional Value

9.6.2.6.16 Integer Value of SB-TSI Temperature Reading Register (Index=C1h, Default=--h)

Bit	R/W	Description
7-0	R/W	**Integer CPU temperature value by SB-TSI I/F** This field returns the integer portion of the CPU temperature. SB-TSI CPU temperature readings and limit registers encode the temperature in increments of 0.125 from 0 to 255.875. The high byte represents the integer portion of the temperature from 0 to 255. One increment in the high byte is equivalent to a step of one. The upper three bits of the low byte represent the decimal portion of the temperature. One increment of these bits is equivalent to a step of 0.125.

9.6.2.6.17 Fractional Value of SB-TSI Temperature Reading Register (Index=C2h, Default=--h)

Bit	R/W	Description
7-0	R/W	**Decimal CPU temperature value by SB-TSI I/F** This field returns the integer portion of the CPU temperature. SB-TSI CPU temperature readings and limit registers encode the temperature in increments of 0.125 from 0 to 255.875. The high byte represents the integer portion of the temperature from 0 to 255. One increment in the high byte is equivalent to a step of one. The upper three bits of the low byte represent the decimal portion of the temperature. One increment of these bits is equivalent to a step of 0.125.

CONFIDENTIAL

9.6.2.6.18 PCH SM-Link Reading Register (Index= D0h~D8h, BANK1)

PCH SM-Link	R/W	Register Index	Description
Byte 0	R	Index= D0h, BANK1	Processor Package Temperature
Byte 1	R	Index= D1h, BANK1	The PCH Temperature
Byte 2	R	Index= D2h, BANK1	CPU Temperature Data LSB [7:0]
Byte 3	R	Index= D3h, BANK1	CPU Temperature Data MSB [15:8]
Byte 4	R	Index= D4h, BANK1	MCH Temperature
Byte 5	R	Index= D5h, BANK1	Thermal Sensor (TS) on DIMM 0
Byte 6	R	Index= D6h, BANK1	Thermal Sensor (TS) on DIMM 1
Byte 7	R	Index= D7h, BANK1	Thermal Sensor (TS) on DIMM 2
Byte 8	R	Index= D8h, BANK1	Thermal Sensor (TS) on DIMM 3
Byte 9	R	Index= D9h, BANK1	
Byte 10	R	Index= DAh, BANK1	
Byte 11	R	Index= DBh, BANK1	
Byte 12	R	Index= DCh, BANK1	

9.6.2.6.19 ECI Processor 1~8 Domain 0,1 Temperature Reading Register(Index= E0h~FFh, BANK1)

	Domain 0		Domain 1	
	Temp. Reading MSB	Temp. Reading LSB	Temp. Reading MSB	Temp. Reading LSB
PECI Processor 0 (0x30)	Bank1, E1h	Bank1, E0h	Bank1, E3h	Bank1, E2h
PECI Processor 1 (0x31)	Bank1, E5h	Bank1, E4h	Bank1, E7h	Bank1, E6h
PECI Processor 2 (0x32)	Bank1, E9h	Bank1, E8h	Bank1, EBh	Bank1, EAh
PECI Processor 3 (0x33)	Bank1, EDh	Bank1, ECh	Bank1, EFh	Bank1, EEh
PECI Processor 4 (0x34)	Bank1, F1h	Bank1, F0h	Bank1, F3h	Bank1, F2h
PECI Processor 5 (0x35)	Bank1, F5h	Bank1, F4h	Bank1, F7h	Bank1, F6h
PECI Processor 6 (0x36)	Bank1, F9h	Bank1, F8h	Bank1, FBh	Bank1, FAh
PECI Processor 7 (0x37)	Bank1, FDh	Bank1, FCh	Bank1, FFh	Bank1, FEh

CONFIDENTIAL

9.6.2.6.20 PECI Bridge Write Address Register (BANK2, Index=70h, Default=--h)

Bit	R/W	Description
7-0	R/W	PECI Bridge Write Address Register

9.6.2.6.21 PECI Bridge Read Address Register (BANK2, Index=71h, Default=--h)

Bit	R/W	Description
7-0	R/W	PECI Bridge Read Address Register

9.6.2.6.22 PECI Bridge Control Register (BANK2, Index=72h, Default=--h)

Bit	R/W	Description
7-3	R/W	**Reserved**
2	R/W	**PECI Channel Select** 0:PECI 0 1:PECI 0 & PECI 1
1	R/W	**Mode Selection** 0:PECI Mode 1: PCH Mode
0	R/W	**PECI Bridge Function Enable** 0: Disable 1: Enable

9.6.2.6.23 PECI Bridge Status Register (BANK2, Index=73h, Default=--h)

Bit	R/W	Description
7-2	-	**Reserved**
1	R	PECI Mode Read Error Status
0	R	PECI Mode Read Busy Status

9.6.2.6.24 PECI Bridge Error Code Register (BANK2, Index=74h, Default=--h)

Bit	R/W	Description
7-0	R	PECI Bridge Error Code Register

9.6.2.6.25 PECI Bridge CPU0 Temperature Register (BANK2, Index=75h, Default=--h)

Bit	R/W	Description
7-0	R	PECI Bridge CPU0 Temperature Register

9.6.2.6.26 PECI Bridge CPU1 Temperature Register (BANK2, Index=76h, Default=--h)

Bit	R/W	Description
7-0	R	PECI Bridge CPU1 Temperature Register

CONFIDENTIAL

9.6.3 Operation

9.6.3.1 Power on Reset and Software Reset

When the system power is first applied, the Environment Controller performs “power on reset” on the registers, making them return to their individual default values during a system hardware reset, and the EC will acquire a monitored value before it goes inactive. The ADC is activated to monitor the VBAT pin and then goes inactive. A software reset through bit 7 of Configuration Register (Index=00h, Default=18h) (refer to page 76) performs the same functions as the hardware reset except the function of the Serial Bus Interface Address register.

9.6.3.2 Starting Conversion

The monitoring function in the EC is activated when bit 3 of Configuration Register is cleared (low) and bit 0 of Configuration Register is set (high). Otherwise, this function will be enabled by setting several enabled bits, which are categorized into three groups, positive voltages, temperatures and FAN Tachometer inputs. Before the EC monitoring function is able to be executed then the monitoring process can then be started.

1. Set the limits.
2. Set the interrupt masks.
3. Set the enable bits.

CONFIDENTIAL

Figure 9-5. Application Example

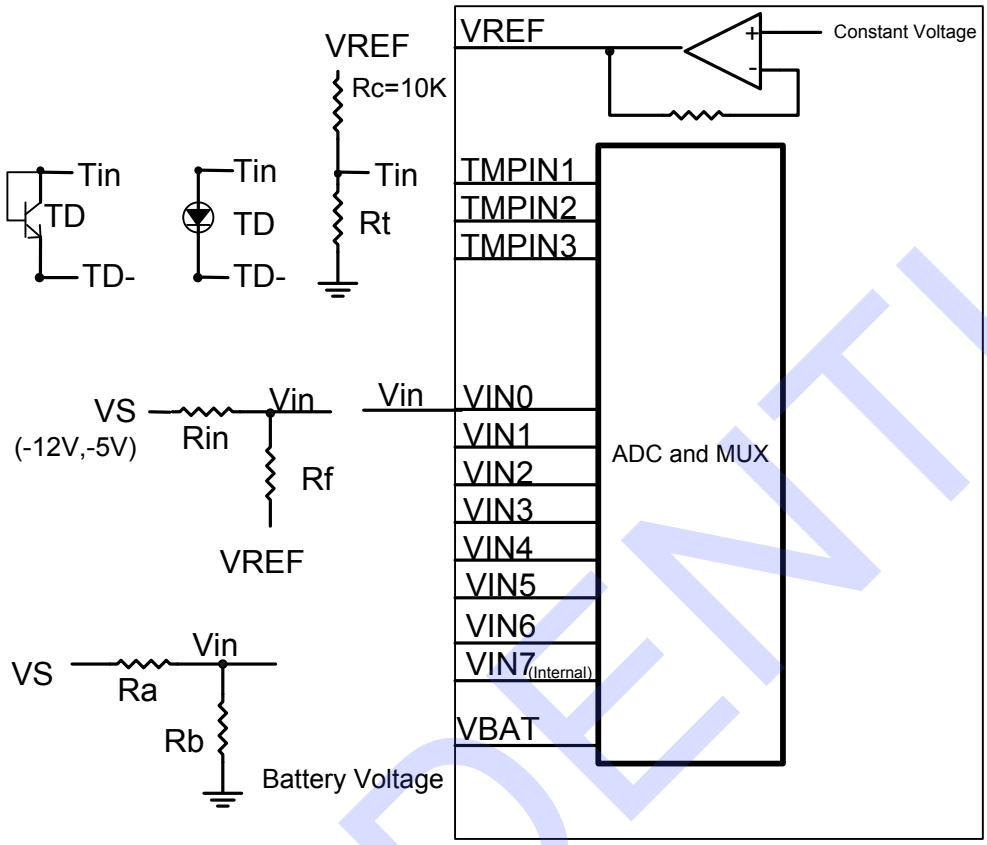

Note: The resistor should provide approximately 2V at the Analog Inputs.

9.6.3.3 Voltage and Temperature Inputs

The 8-bit ADC has a 10.9mV LSB with an input range from 0V to 2.8V. The 2.5V supplies of PC applications can be directly connected to the inputs. When the input voltage is greated than 2.8V, it is necessary to divide the input voltage into an acceptable range. When the divided circuit is used to measure the positive voltage, the recommended range for Ra and Rb is from 10KΩ to 100KΩ. The negative voltage can be measured by the same divider, which is connected to VREF (constant voltage, 2.8V), and do not attempt to measure it with the divider connected to the ground. The EC temperature measurement system converts the voltage of the TMPINs to 8-bit two's-complement. The system also includes an OP amp providing a constant voltage, an external thermistor, a constant resistance, the ADC and a conversion table ROM.

Temperature	Digital Output Format	
	Binary	Hex
+ 125°C	01111101	7Dh
+ 25°C	00011001	19h
+ 1°C	00000001	01h
+ 0°C	00000000	00h
- 1°C	11111111	FFh
- 25°C	11100111	E7h
- 55°C	11001001	C9h

CONFIDENTIAL

With the addition of the external application circuit, the actual voltages are calculated below:

Positive Voltage: Vs = Vin X (Ra+Rb) / Rb
Negative Voltage: Vs = (1+Rin/Rf) X Vin – (Rin/Rf) X VREF

All the analog inputs are equipped with the internal diodes that clamp the input voltage exceeding the power supply and ground; nevertheless, the current limiting input resistor is recommended since no dividing circuit is available.

9.6.3.4 Layout and Grounding

A separate and low-impedance ground plane for analog ground is essential to achieve accurate measurement. The analog ground also provides a ground point for the voltage dividers including the temperature loops and analog components. Analog components such as voltage dividers, feedback resistors and the constant resistors of the temperature loops should be located as closely as possible to the IT8613E. However, the thermistors of the temperature loops should be positioned within the measuring area. In addition, the power supply bypass and the parallel combination of 10μF and 0.1μF bypass capacitors connected between AVCC3 and analog ground also needs to be located as closely as possible to the IT8613E.

Due to the small differential voltage of thermal diode (diode-connected transistor), it is necessary to adhere to the steps below for PCB layout.

- Position the sensor as closely as possible to the EC.
- The sensor ground should be directly shorted to GNDA with excellent noise immunity.
- Keep traces away from any noise sources. (High voltage, fast data bus, fast clock , CRTs …)
- Use trace width of10 mil minimum and provide guard ground (flanking and under).
- Position 0.1μF bypass capacitors as closely as possible to IT8613E.

9.6.3.5 Fan Tachometer

The Fan Tachometer inputs gate a 22.5 kHz clock into an 8-bit or 16-bit counter (maximum count=255 or 65535) for one period of the input signals. Counts are based on two pulses per revolution for tachometer output.

RPM = 1.35 X 10^6 / (Count X Divisor) ; (Default Divisor = 2)

The maximum input signal range is from 0 to VCC. An additional external circuit is needed to clamp the input voltage and current.

9.6.3.6 Interrupt of the EC

The EC generates interrupts as a result of each of its Limit registers on the analog voltage, temperature, and FAN monitor. All the interrupts are indicated in two Interrupt Status Registers. The IRQ and SMI# outputs have individual mask registers. These two Interrupts can also be enabled/disabled by Configuration Register (Index=00h, Default=18h) (refer to page 76). The Interrupt Status Registers will be reset after a read operation. When the Interrupt Status Registers are cleared, the Interrupt lines will also be cleared. When a read operation is completed before the completion of the monitoring loop sequence, it indicates an Interrupt Status Register has been cleared. It takes EC 1.5 seconds to allow all the EC Registers to be safely updated between completed read operations. When bit 3 of the Configuration Register is set to high, the Interrupt lines are cleared and the monitoring loop will be stopped. The loop will resume after this bit is cleared.

All analog voltage inputs have both high and low Limit Registers to generate interrupts whereas FAN monitoring inputs only have low Limit Register to warn the host. The IT8613E provides three modes dedicated to temperature interrupts in the EC: “Interrupt” mode, “Enhanced Interrupt” mode and “Comparator” mode.

CONFIDENTIAL

Interrupt Mode

An interrupt will be generated whenever the temperature exceeds Th limit, and the corresponding interrupt status bits will be set to high until being reset by reading Interrupt Status Register 3 (Index=03h, Default=00h) (refer to page 76). Once an interrupt event occurs by exceeding Th limit, an interrupt will only occur again when the temperature goes below TL limit after being reset. Again, it will set the corresponding status bit to high until being reset by reading Interrupt Status Register 3 (Index=03h, Default=00h) (refer to page 76).

Enhanced Interrupt Mode

When the enhanced interrupt mode is enabled (bit 3, 6 and 7 of General Control Register 2 (Index=0Ch, Default=00h) for TMPIN1, 2, and 3 respectively) (refer to page 79), an interrupt will be generated when the temperature is higher than the high limit or lower than the low limit.

Comparator Mode

This mode is entered when the TL limit register is set to 127°C. In this mode, an interrupt will be generated whenever the temperature exceeds the Th limit. The interrupt will also be cleared by reading Interrupt Status Register 3 (Index=03h, Default=00h) (refer to page 76), but the interrupt will be set again following the completion of another measurement cycle. It will remain set until the temperature goes below the Th limit.

CONFIDENTIAL

Figure 9-6. Temperature Interrupt Response Diagram

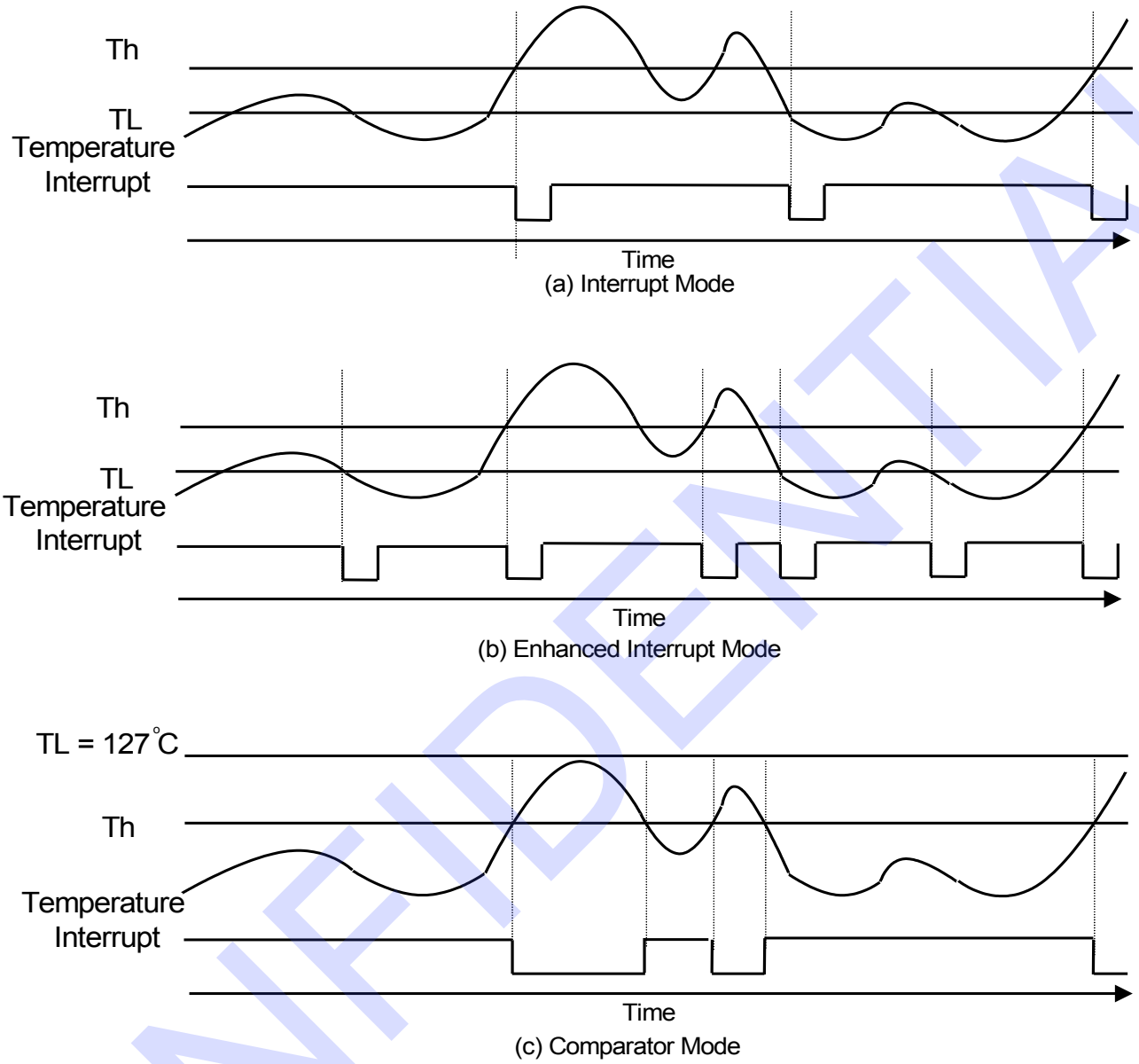

9.6.3.7 FAN Controller

9.6.3.7.1 Overview

IT8613E supports 6 advanced fan controllers (FAN1~6) with SmartGuardian Mode. Each provides Software Mode and Automatic for selection. Please refer to Figure 9-7. FAN Mode Selection for the control mode selection provided by each fan. SmartGuardian Mode is with several selections for customers to choose depending on their requirments for the fan control. SmartGuardian Mode provides two selectins, Software Mode and Automatic Mode. For Software Mode, the value of PWM output and RPM can be set by program/BIOS accordingly. Please refer to section 9.6.3.7.2 SmartGuardian - Software Mode for the detail. As for Automatic Mode, the PWM/RPM curve responds to the single temperature input or multi-temperature inputs in system (ex. CPU/PCH…, each fan can respond to up to 6 temperature inputs simultaneously.). Please refer to Section 9.6.3.7.3 SmartGuardian - Automatic Mode for the detail.

IT8613E supports both PWM control and RPM control in all fan control mode. For PWM control, FAN_CTRL

CONFIDENTIAL

generates the PWM output by 256 steps to control the fan speed while for RPM control, FAN_TAC input generates the PWM output to control the fan speed.

IT8613E's fan controllers feature some enhancements such as Extra-Vector (refer to Section 9.6.3.7.6), Fan-Hysteresis (refer to Section 9.6.3.7.9), and Fan-Smoothing (refer to Section 9.6.3.7.10), with which IT8613E is able to provide more flexible and acoustic noise-prevention FAN control.

Figure 9-7. FAN Mode Selection

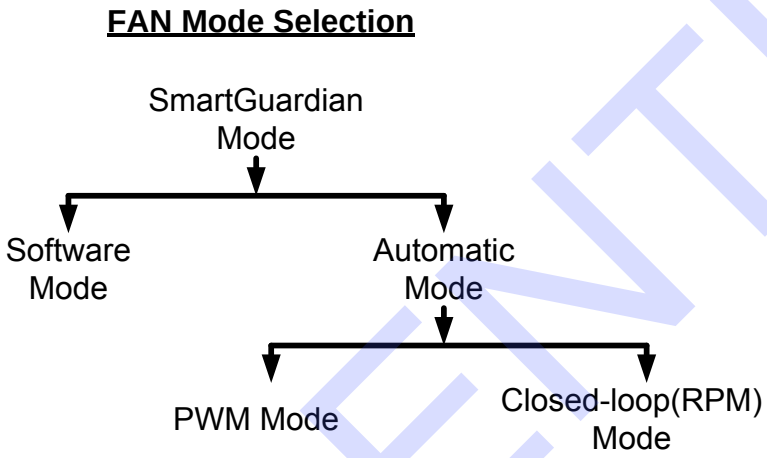

9.6.3.7.2 SmartGuardian - Software Mode

Software Mode Enable Setting:
Enable SmartGuardian Mode (set to '1b', Index 13h[1-2] for FAN_2-5) and select Software Operation (set to '0b', Index 16h[7], 17h[7] 1Eh[7], 1Fh[7], for FAN_2-5).
FAN_2~5 control registers are Index 6Bh, 73h, 7Bh, and A3h.

PWM Control:
PWM output duty(%) = Control Value / 256
Control Value=Index 6Bh[7-0] or 73h[7-0] or 7Bh[7-0] or A3h[7-0]

RPM Control:
Target RPM = Control Value * 32
Control Value= Index 6Bh[7-0] or 73h[7-0] or 7Bh[7-0] or A3h[7-0]

Related Register:

Table 9-13. Software Mode Control Registers Summary

	FAN_CTL PWM Mode Automatic/Software Operation Selection	FAN_CTL Polarity	FAN_CTL SmartGuardian Automatic Mode Start PWM Registers	FAN_CTRL PWM Base Clock Select
FAN2	16h[7] = **0**	14h[7]	6Bh[7-0]	55h[6-4]
FAN3	17h[7] = **0**	14h[7]	73h[7-0]	14h[6-4]
FAN4	1Eh[7] = **0**	14h[7]	7Bh[7-0]	14h[6-4]
FAN5	1Fh[7] = **0**	14h[7]	A3h[7-0]	14h[6-4]

CONFIDENTIAL

9.6.3.7.3 SmartGuardian - Automatic Mode

Automatic Architecture:
Figure 9-8 illustrates the Automatic Mode FAN curve.
Left: PWM mode control
Right: RPM mode control
The PWM/RPM value is subject to the temperature inputs.
The register summary is listed in Table 9-14.

Figure 9-8. Automatic FAN Architecture

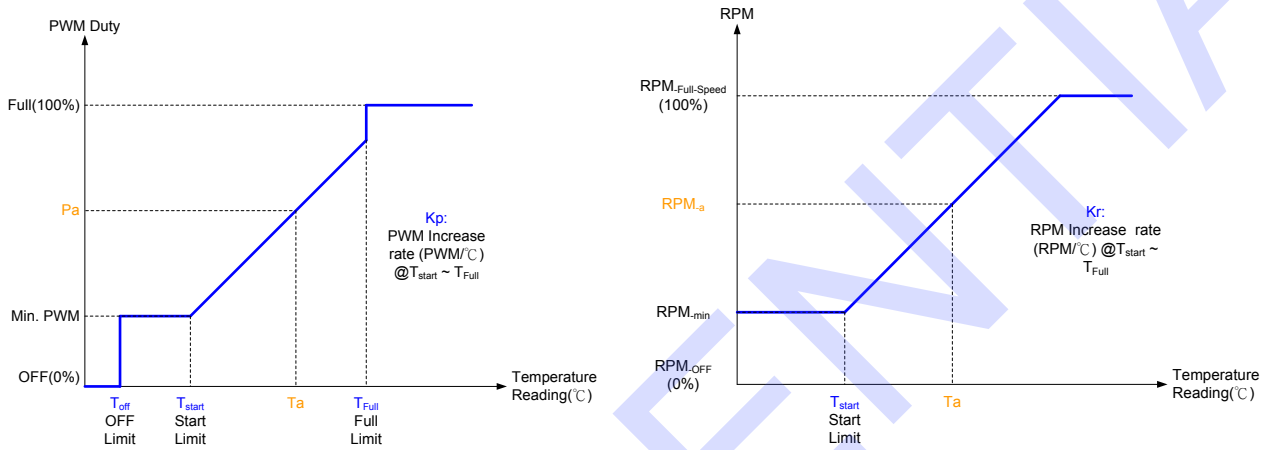

The control registers are described as the followings:

OFF Limit	: Temperature Limit Value of FAN OFF
START Limit	: Temperature Limit Value of FAN START
Full Limit	: Temperature Limit Value of FAN FULL (PWM Control Only)
Minimum PWM/RPM	: PWM/RPM keep value as " OFF_Limit < Temperature < START_Limit "
Slope of PWM/RPM	: PWM/RPM increase rate per ℃ as "START_Limit < Temperature < FULL_Limit"

Table 9-14. Automatic FAN Control Registers Summary

	Temperature Limit of FAN OFF	Temperature Limit of FAN START	Temperature Limit of Full Speed	Minimum PWM/RPM	Slope of PWM/RPM
FAN2	68h	69h	6Ah	6Bh	6Ch
FAN3	70h	71h	72h	73h	74h
FAN4	78h	79h	7Ah	7Bh	7Ch
FAN5	A0h	A1h	A2h	A3h	A4h

CONFIDENTIAL

9.6.3.7.4 SmartGuardian - PWM Automatic Mode

In the PWM automatic mode, the PWM value is subject to the temperature inputs with a linear change. The change of the PWM output (Pa) depends on Ta (one temperature reading of Hardware monitor).

Figure 9-9. PWM Automatic Mode

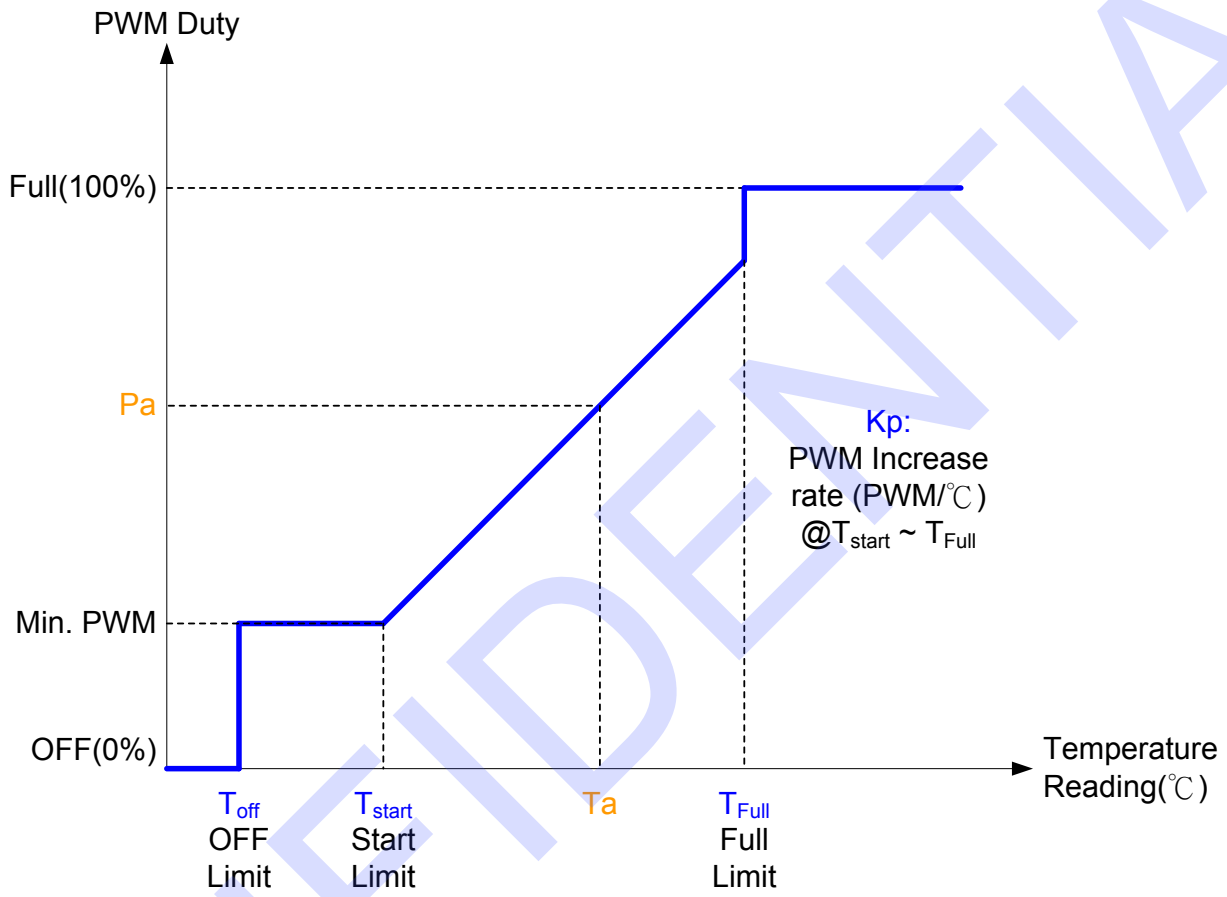

PWM Output (Pa) Conditions

Pa is OFF (0%) state.	; Ta < OFF-Limit
Pa keep at Min. PWM.	;OFF-Limit < Ta < Start-Limit
Pa = Min.-PWM + (Ta - T_{start}) * Kp	; Start-Limit < Ta < Full-Limit
Pa is Full(100%) state.	; Ta > Full-Limit

CONFIDENTIAL

9.6.3.7.5 SmartGuardian – Closedloop (RPM) Automatic Mode

In the Closed-loop (RPM) automatic mode, the target RPM value is subject to the temperature inputs with a linear change. The required RPM can be maintained by increasing or decreasing the PWM duty of the FAN_CTL pin.

Figure 9-10. Closed-loop (RPM) Automatic Mode

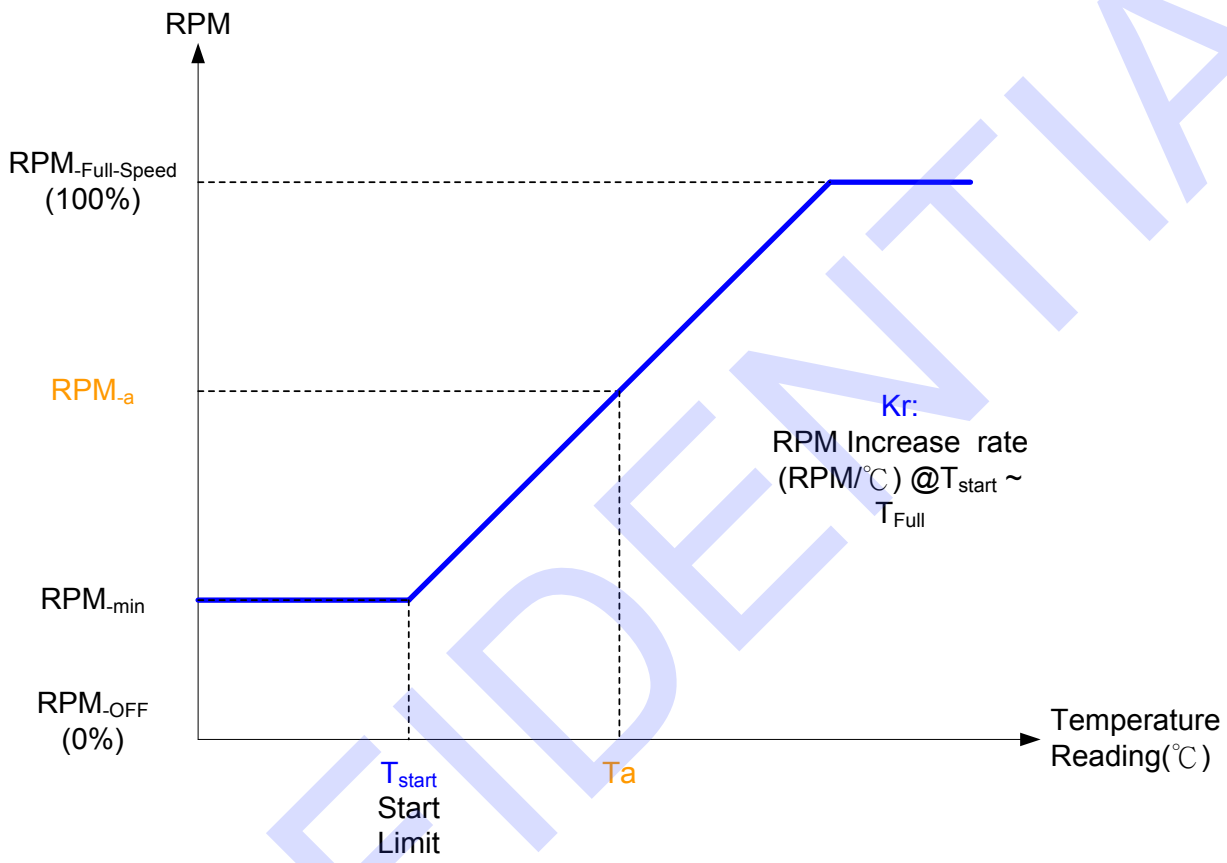

RPM Control (PPM-a) Conditions:

PPM-a = RPM-min = 16 * RPM-min Value ; OFF-Limit < Ta < Start-Limit

PPM-a = RPM-min + (Ta - T_{start}) * Kp * 8 ; Start-Limit < Ta < Full-Limit

CONFIDENTIAL

9.6.3.7.6 Extra Vectors

IT8613E provides Extra-Vector for flexible FAN control. Each FAN has three extra vectors individually. The usage model of it is as the following:
Set Extra-Vector as an individual PWM/RPM value.
The target PWM/RPM will be the SUM of Extra-vector and the current PWM/RPM.
Extra-Vector can only be implemented in Automatic Mode.
Extra-Vector can be implemented as the following features:

- **Multi-Curve:** The FAN curve can be multi-segment between START and FULL-ON and each segment has an individual slope. (Maximum four curves* Note1)
- **Multi-Sensor:** Multiple temperature sensors to control/affect the use of a single fan. (Maximum four sensors, *Note1)
- **Over-Temperature protect:** FAN outputs maximum PWM/RPM once the temperature reading reaches the FULL-ON temperature.
- **Negative Slope**

***Note1**: Each FAN (FAN2~5)has three extra vectors，and the multi-sensor feature is no longer available If all extra vectors are implemented as multi-curve.

Here are the description of Extra-Vector registers. FAN 2~5 and Extra-Vector A, B, C registers are shown in Table 9-15.

- **Extra-Vector Enable** : 0: Disable; 1: Enable
- **START Limit** : Temperature Limit Value of Fan Extra-Vector Start
- **Temperature Input** : Refer to Section 9.6.3.7.11 FAN Temperature Input
- **Positive/Negative Slope** : 0:Positive; 1: Negative
- **Slope Value** : Slope value of Extra-Vector
  PWM Control: Slope = bit[6-0] (PWM/℃)
  RPM Control: Slope = bit[6-0] *8 (RPM/℃)
- **Range** : These bits determine the extra vector range after the temperature limit. If the input temperature > (temperature limit + Range[6:0]), the vector will equal the value of (temperature limit + Range[6:0]). If Range[6:0]=00h, it means no range limit.

Table 9-15. FAN Extra-Vector Registers

Note: These registers are in Bank 2.

	Ex-Vector	Extra-Vector Enable	START Limit	Temperature Input	positive/ Negative Slope	Slope value	Range	Full Limit
FAN2	A	21h[7]	20h	22h[7-5]	23h[7]	21h[6-0]	23h[6-0]	N/A
	B	25h[7]	24h	26h[7-5]	27h[7]	25h[6-0]	27h[6-0]	N/A
	C	29h[7]	28h	2Ah[7-5]	2Bh[7]	29h[6-0]	2Bh[6-0]	2Ch
FAN3	A	31h[7]	30h	32h[7-5]	33h[7]	31h[6-0]	33h[6-0]	N/A
	B	35h[7]	34h	36h[7-5]	37h[7]	35h[6-0]	37h[6-0]	N/A
	C	39h[7]	38h	3Ah[7-5]	3Bh[7]	39h[6-0]	3Bh[6-0]	3Ch
FAN4	A	41h[7]	40h	42h[7-5]	43h[7]	41h[6-0]	43h[6-0]	N/A
	B	45h[7]	44h	46h[7-5]	47h[7]	45h[6-0]	47h[6-0]	N/A
	C	49h[7]	48h	4Ah[7-5]	4Bh[7]	49h[6-0]	4Bh[6-0]	4Ch
FAN5	A	51h[7]	50h	52h[7-5]	53h[7]	51h[6-0]	53h[6-0]	N/A
	B	55h[7]	54h	56h[7-5]	57h[7]	55h[6-0]	57h[6-0]	N/A
	C	59h[7]	58h	5Ah[7-5]	5Bh[7]	59h[6-0]	5Bh[6-0]	5Ch

CONFIDENTIAL

9.6.3.7.7 Multi-Curve FAN Control

Multi-Curve methodology:
Set the same temperature inputs to Extra-Vector as that of the original FAN, and the PWM/RPM will be changed once the temperature reaches the Extra-Vector START Limit. For example, CPU FAN keeps low PWM/RPM slope while the temperature is lower than Extra-Vector. Once the CPU temperature reaches the setting-point, CPU FAN will increase the PWM/RPM as the slope which is subjected to Extra-Vector. Figure 9-11 illustrates that the addition of Extra-Vector curve (Figure B) and FAN curve (Figure A) equals Multi-curve curve (Figure C).

PWM Output (Pa) Conditions

Pa is OFF(0%) state. ;Ta < OFF-Limit
Pa keep at Min. PWM. ;OFF-Limit < Ta < Start-Limit
Pa = [Min.-PWM + (Ta - T_{start}) * (Kp1)] ; Start-Limit < Ta < EX-Start Limit
Pa = [Min.-PWM + (Ta - T_{start}) * (Kp1)]
+ [(Ta – EX-T_{start}) * (Kp2)]
; EX-Start Limit < Ta < Full-Limit
Pa is Full(100%) state. ; Ta > Full-Limit

Figure 9-11. Multi-Curve Fan Control

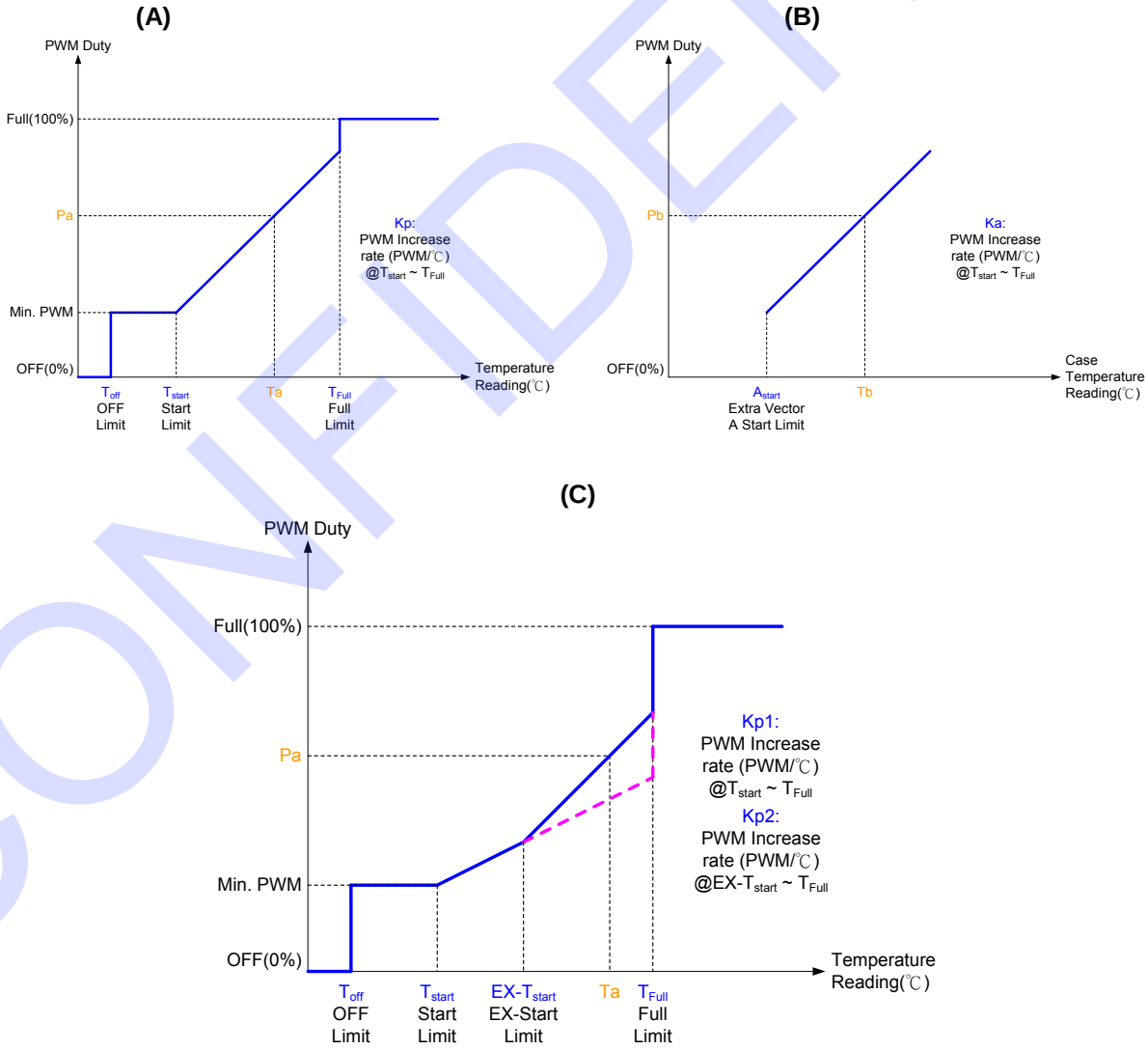

CONFIDENTIAL

9.6.3.7.8 Multi-Sensor FAN Control

Multi-Sensor methodology:
Set different temperature inputs to Extra-Vector from that of the original FAN and the PWM/RPM will keep on same slope until reaching the Extra-Vector setting-point, For example, The system FAN monitors not only system but also CPU temperature, and once the CPU temperature reaches the Extra-Vector setting-point, the system FAN will increase the PWM/RPM as the slope which is subjected to Extra-Vector. Figure 9-12 illustrates that the addition of Extra-Vector curve (Figure B) and FAN curve (Figure A), equals Multi-sensor curve (Figure C).

PWM Output (Pa) Conditions

P_{out} is OFF(0%) state.	;Ta < OFF-Limit , Tb < A_{start}
P_{out} keep at Min. PWM.	;OFF-Limit < Ta < Start-Limit, Tb < A_{start}
P_{out} = [Min.-PWM + (Ta - T_{start}) * (Kp)] + [(Tb –$A_{start\ t}$) * (Ka)]	; Start-Limit < Ta < Full-Limit, Tb > A_{start}
P_{out} is Full(100%) state.	; Ta > Full-Limit

Figure 9-12. Multi-Sensor Fan Control

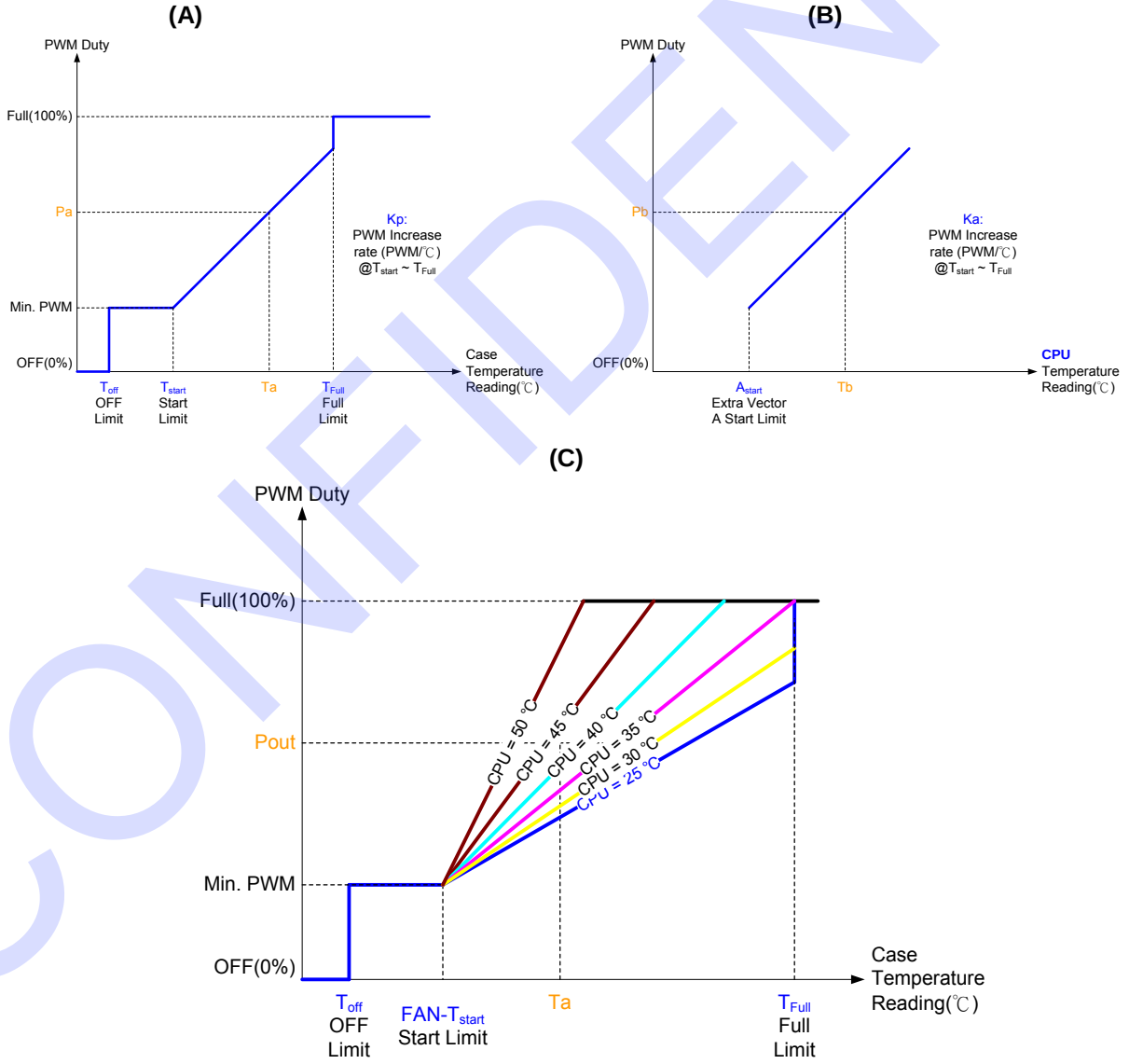

CONFIDENTIAL

9.6.3.7.9 Fan Control Hysteresis

Fan Control Hysteresis is to stabilize the fan speed so the PWM/RPM output won't be adjusted due to little change of temperature. It reduces the ambient noise from high Fan speed or full Fan speed triggered by a certain temperature when the low temperature is set to the minimum Fan speed. Below is the chart illustrating the correlation between the PWM duty and temperature reading after Fan Hysteresis is enabled and the related registers are shown in the following table as well.

Figure 9-13. Fan Control Hysteresis

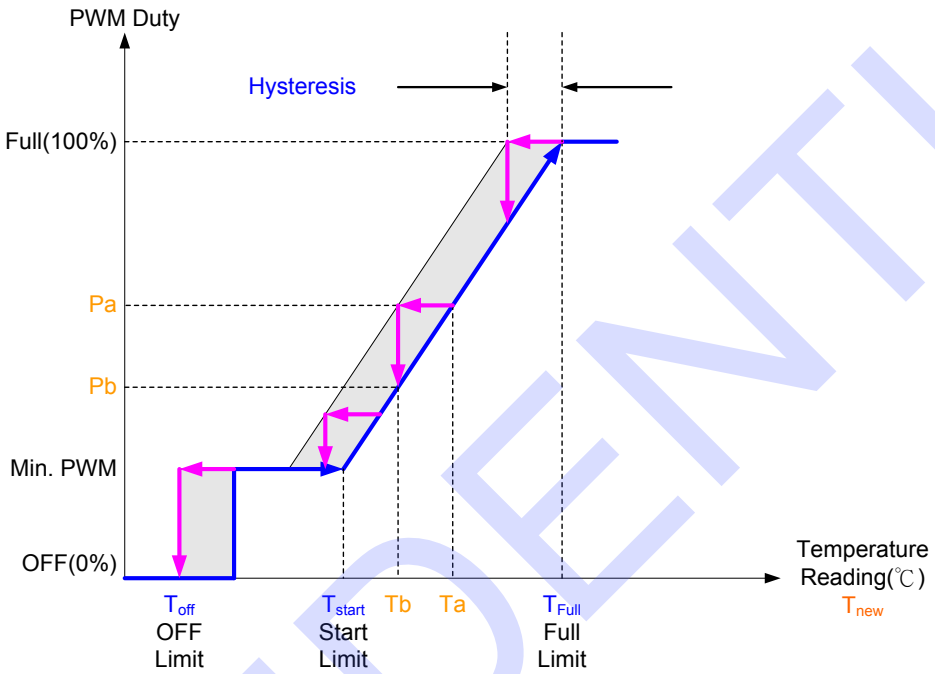

If T_{new} > Ta

P_{new} = Min.-PWM + (T_{new} - T_{start}) * Kp

If Ta > T_{new} >Tb

P_{new} = **Pa**

If T_{new} < Tb

P_{new} = Min.-PWM + (T_{new} - T_{start}) * Kp

Related Register:

Table 9-16. FAN Hystersis & Smoothing Control Registers Summary

	△ -Temperature Interval [4:0]	FAN Smoothing	FAN PWM Smoothing Step Frequency Selection
FAN2	6Dh[4-0]	6Ch[7]	Bank2,5Eh[5-0]
FAN3	75h[4-0]	74h[7]	Bank2,5Fh[5-0]
FAN4	7Dh[4-0]	7Ch[7]	Bank2,6Dh[5-0]
FAN5	A5h[4-0]	A4h[7]	Bank2,6Eh[5-0]

CONFIDENTIAL

9.6.3.7.10 Fan Control Smoothing

Fan Control smoothing is to make hysteresis to the fan speed according to the setting value of PWM/RPM. It is to prevent the acoustic noise and abnormality monitor caused from frequently-changing temperature of objectives. Please refer to Figure 9-14 for Fan control smoothing and related registers shown in the following table.

Figure 9-14. Fan Control Smoothing

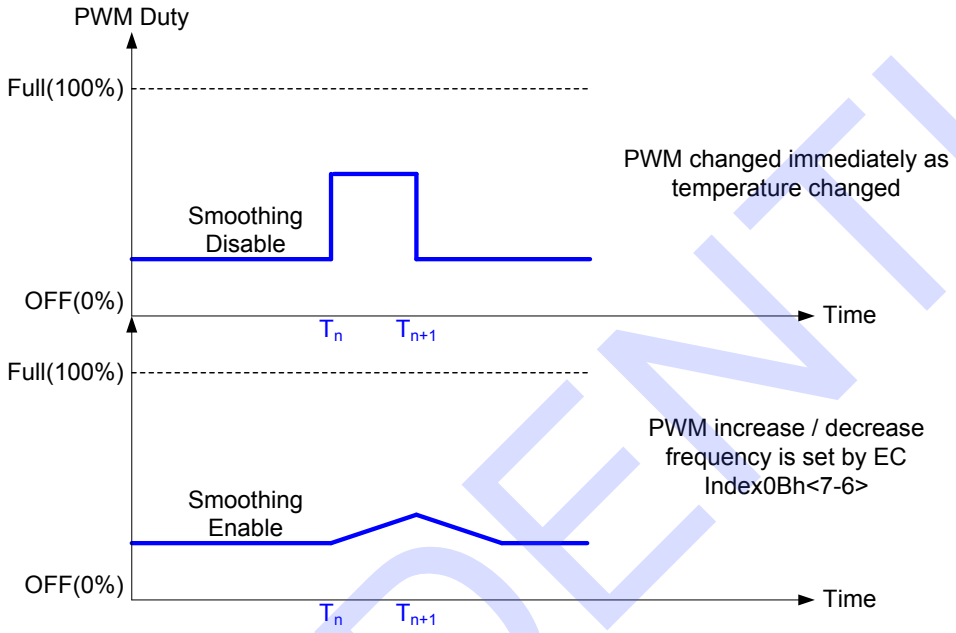

Related Register: Please refer to Table 9-16 for the detail.

CONFIDENTIAL

9.6.3.7.11 FAN Temperature Input

IT8613E's Fan Controller supports 6 temperature inputs (29h~2Eh) mapped to all fan controllers and extra vectors. Each temperature input is from 16 sources, Thermal Diode/Thermistor (2 sets), PECI (PECI 0x30~0x35, max. 6 CPUs), SM-Link (PCH, MCH, DIMM0~3), SMBUS (1 channel). Please refer to Figure 9-15 for the overview of the mapping structure.

Figure 9-15. FAN Controller Overview

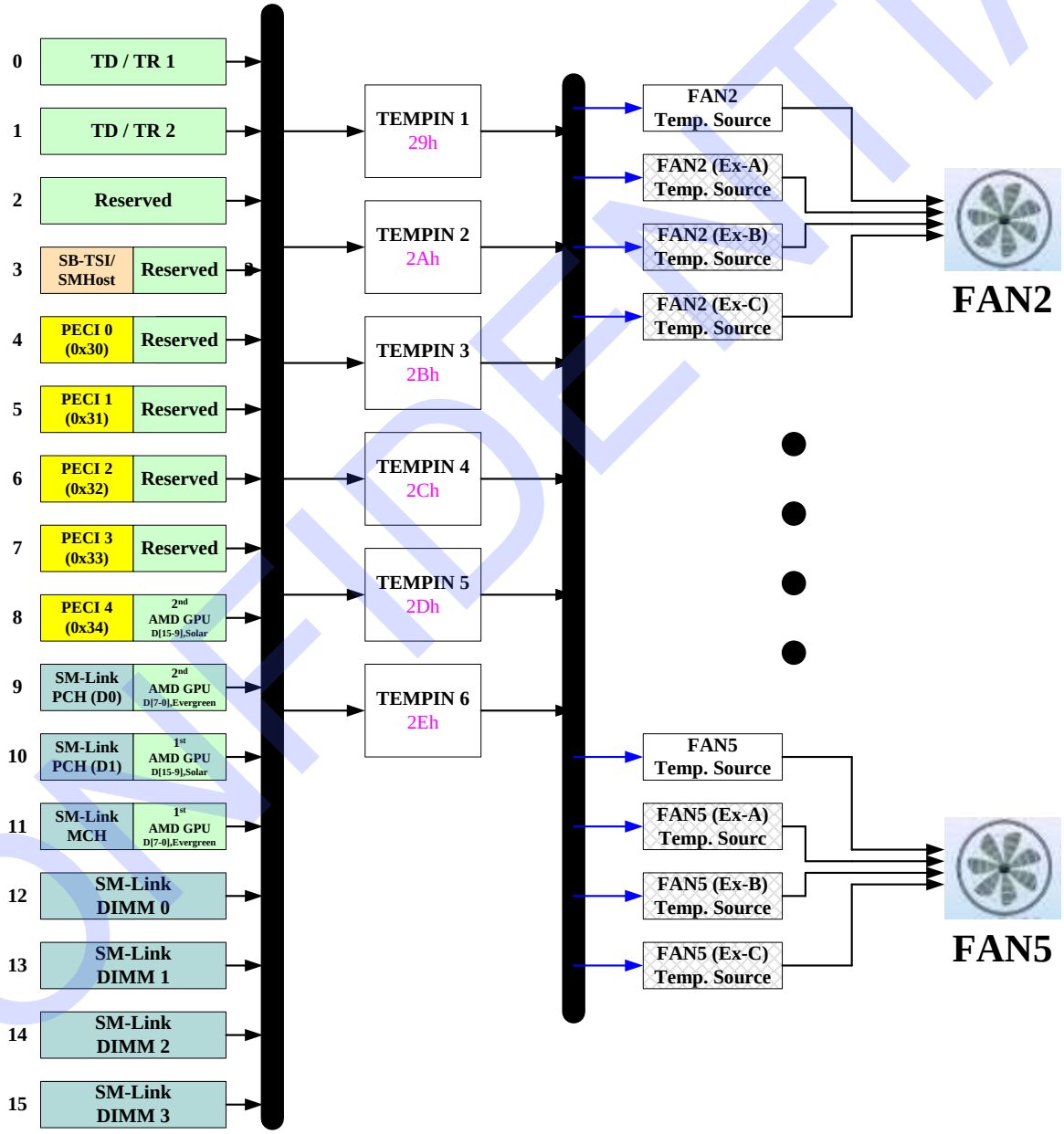

CONFIDENTIAL

Related Table Summary:

Table 9-10. TMPIN Source Selection Table

TMPIN Source	TMPIN Source Selection – 1 (TSS1) Refer to Table 9-11	TMPIN Source Selection- 2 (TSS2) Refer to Table 9-11 & Table 9-12
TMPIN1 (29h)	Bank2,1Dh[3-0], default=0000b	Bank2,3Dh[0], default=0b
TMPIN2 (2Ah)	Bank2,1Dh[7-4], default=0000b	Bank2,3Dh[1], default=0b
TMPIN3 (2Bh)	Bank2,1Eh[3-0], default=0000b	Bank2,3Dh[2], default=0b
TMPIN4 (2Ch)	Bank2,1Eh[7-4], default=0000b	Bank2,3Dh[3], default=0b
TMPIN5 (2Dh)	Bank2,1Fh[3-0], default=0000b	Bank2,3Dh[4], default=0b
TMPIN6 (2Eh)	Bank2,1Fh[7-4], default=0000b	Bank2,3Dh[5], default=0b

Table 9-11. TMPIN Source Selection – 1 (TSS1)

Bit[3-0]	TMPIN Source		Switch Register
0000	TMPIN1(TD1)	TMPIN1(TR1)	51h[bit 0 & 3]
0001	TMPIN2(TD2)	TMPIN2(TR2)	51h[bit 1 & 4]
0010	Reserved	Reserved	51h[bit 2 & 5]
0011	SB-TSI / SM-Host	Reserved	Refer to Table 9-12 TSS2
0100	PECI1(0x30) Domain0	Reserved	Refer to Table 9-12 TSS2
0101	PECI2(0x31) Domain0	Reserved	Refer to Table 9-12 TSS2
0110	PECI3(0x32) Domain0	Reserved	Refer to Table 9-12 TSS2
0111	PECI4(0x33) Domain0	Reserved	Refer to Table 9-12 TSS2
1000	PECI5(0x34) Domain0	2nd AMD GPU Temperature for Solar Family	Refer to Table 9-12 TSS2
1001	PCH from SM-Link (Data 0)	2nd AMD GPU Tepmerature for EveryGreen Family	Refer to Table 9-12 TSS2
1010	PCH from SM-Link (Data 1)	1st AMD GPU Temperature for Solar Family	9Eh[bit 1] = 1
1011	MCH from SM-Link	1st AMD GPU Tepmerature for EveryGreen Family	9Eh[bit 1] = 1
1100	DIMM0 from SM-Link	AMD CPU DTS (SB-TSI)	Refer to Table 9-12 TSS2
1101	DIMM1 from SM-Link	MxM GPU	Refer to Table 9-12 TSS2
1110	DIMM2 from SM-Link	PECI Bridge PECI0	Bank2, 72h[bit 1]=1 , 72h[bit 2=0]
1111	DIMM3 from SM-Link	PECI Bridge PECI 0&1	Bank2, 72h[bit 1]=1 , 72h[bit 2=1]

Table 9-12. TMPIN Source Selection – 2 (TSS2)

TMPIN Source Selection 2	
Register = '0b'	**Register = '1b'**
SB-TSI / SM-Host	Reserved
PECI1(0x30) Domain0	Reserved
PECI2(0x31) Domain0	Reserved
PECI3(0x32) Domain0	Reserved
PECI4(0x33) Domain0	Reserved
PECI5(0x34) Domain0	2nd AMD GPU Temperature for Solar Family
PCH from SM-Link (Data 0)	2nd AMD GPU Tepmerature for EveryGreen Family
PCH from SM-Link (Data 1)	N/A
MCH from SM-Link	N/A
DIMM0 from SM-Link	AMD CPU DTS (SB-TSI)
DIMM1 from SM-Link	MxM GPU

CONFIDENTIAL

9.6.3.8 External Thermal Sensor Programming Procedure

Figure 9-16. PECI Programming Procedure

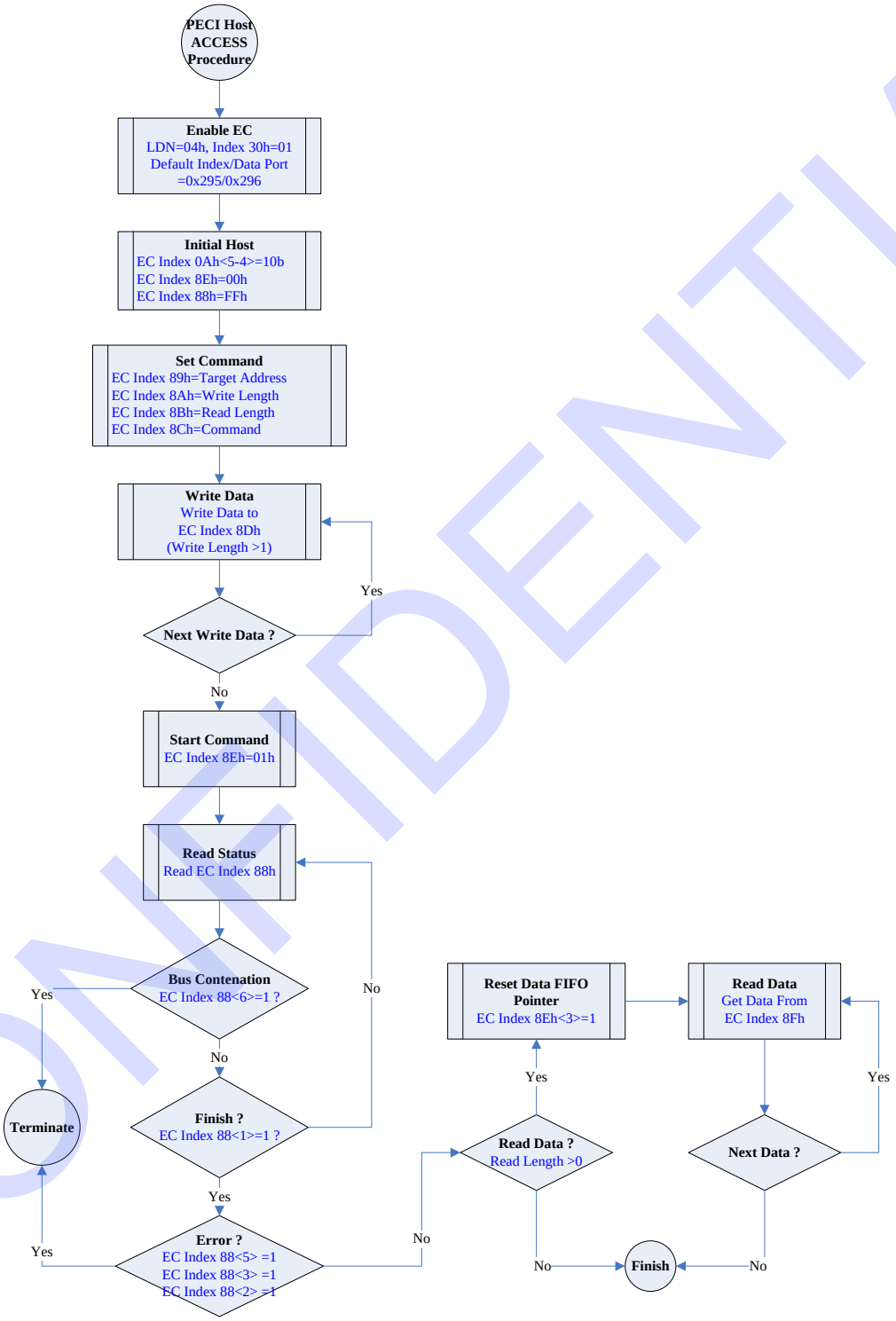

CONFIDENTIAL

Figure 9-17. SST Host Programming Procedure

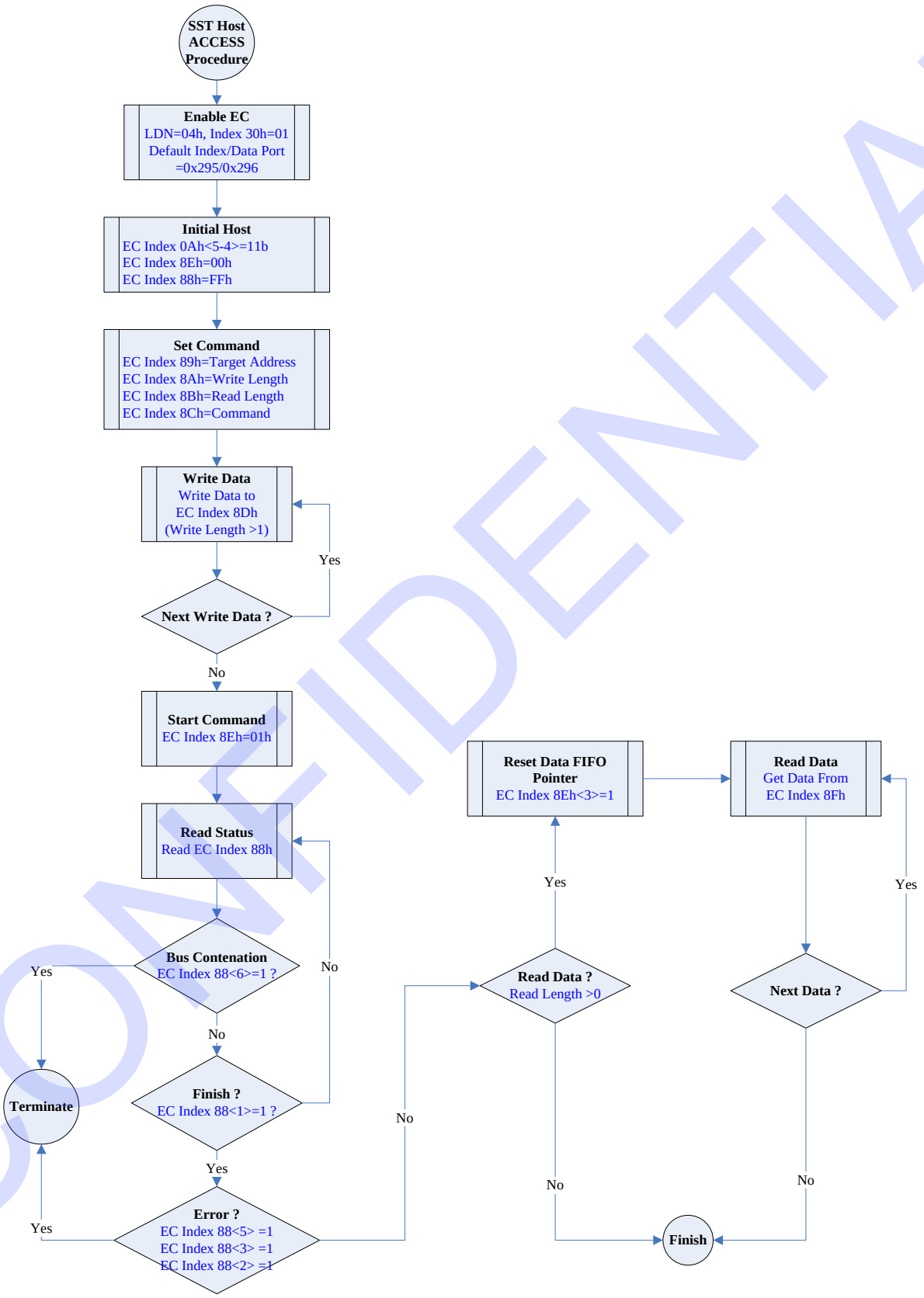

CONFIDENTIAL

Figure 9-18. SST Slave Programming Procedure

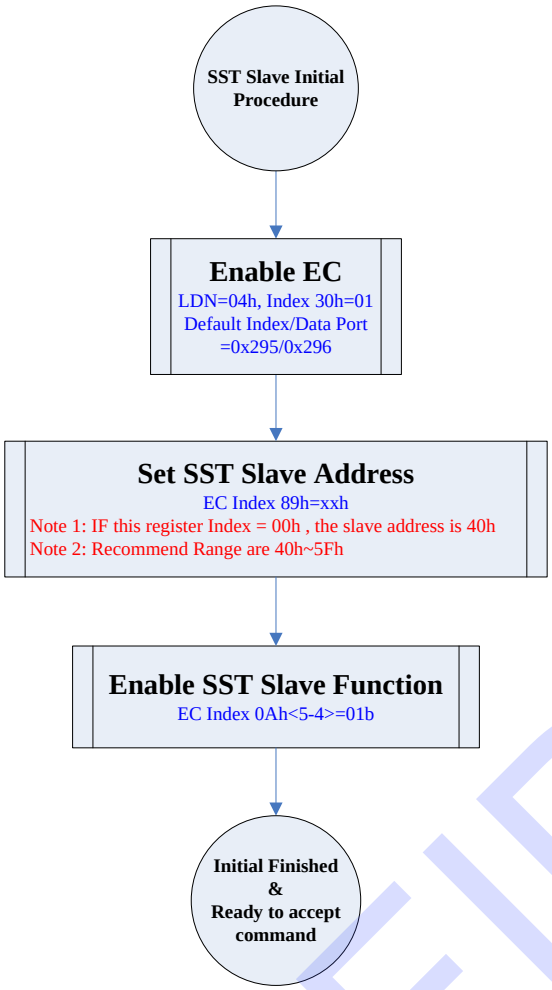

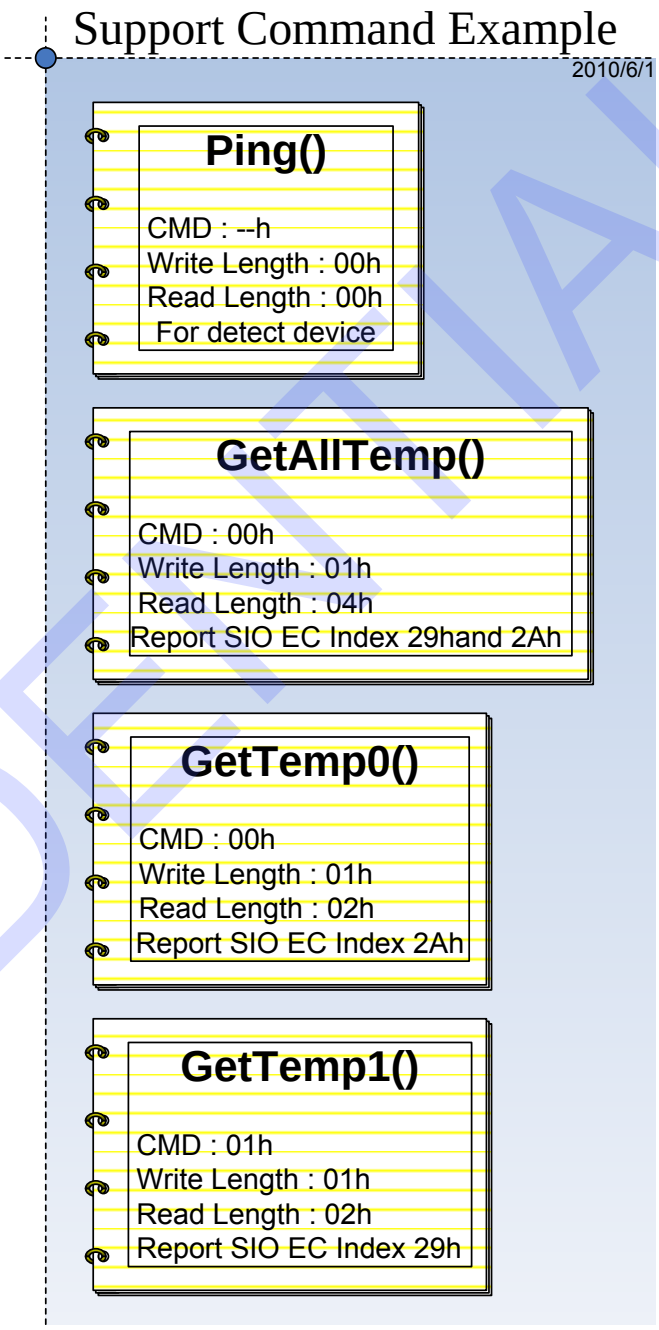

CONFIDENTIAL

Figure 9-19. SMBUS Host Programming Procedure

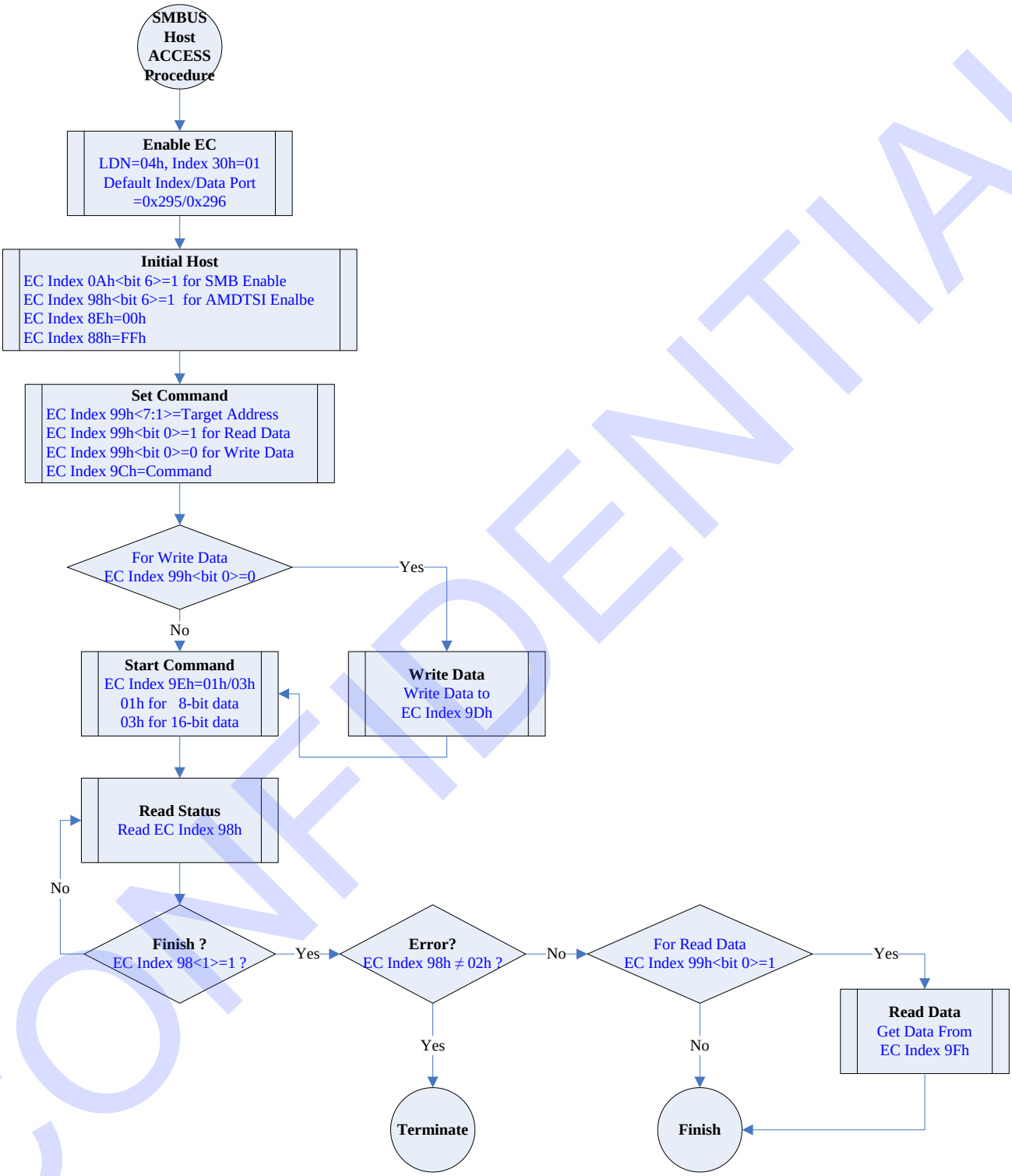

CONFIDENTIAL

Figure 9-20. SBTSI Host Programming Procedure

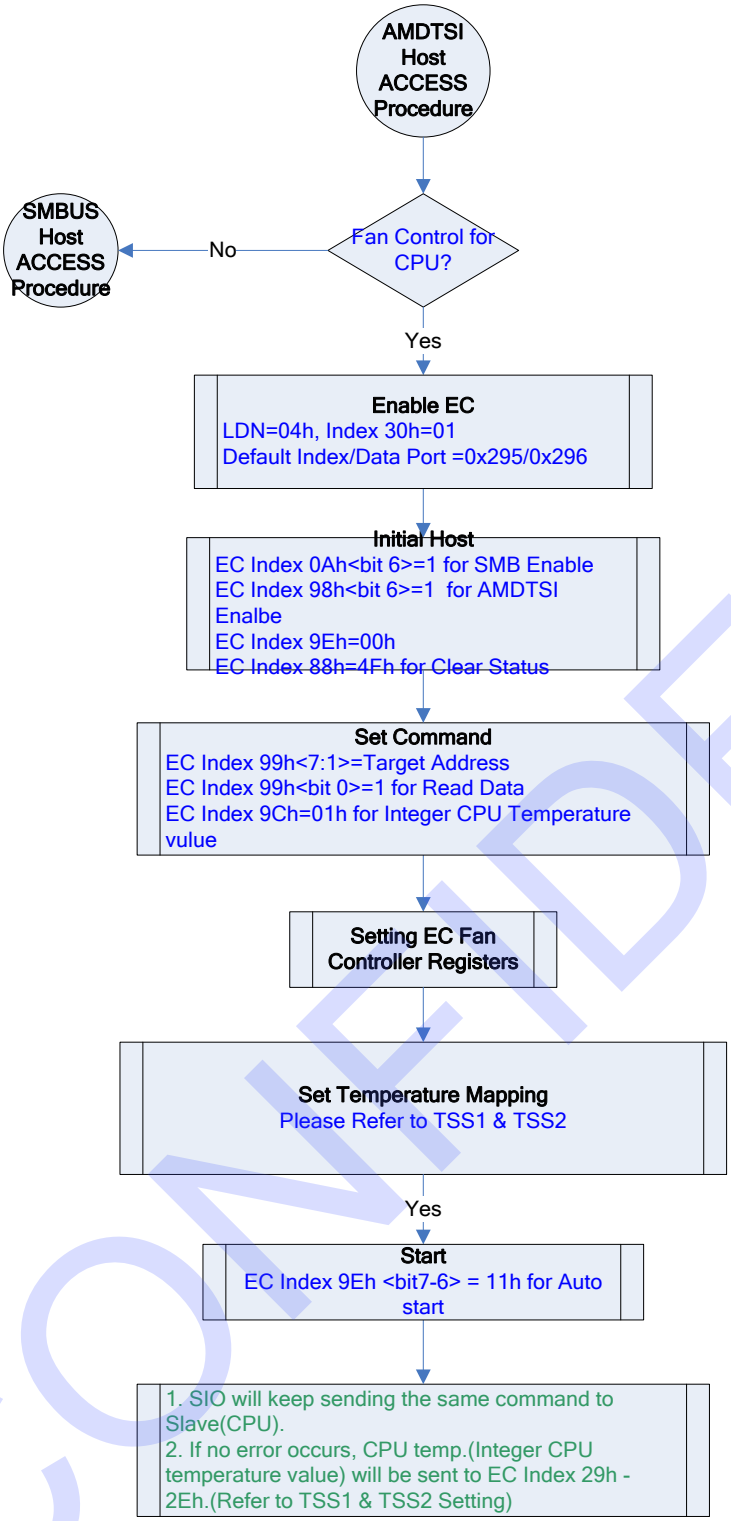

CONFIDENTIAL

Figure 9-21. PCH SM-Link Programming Procedure

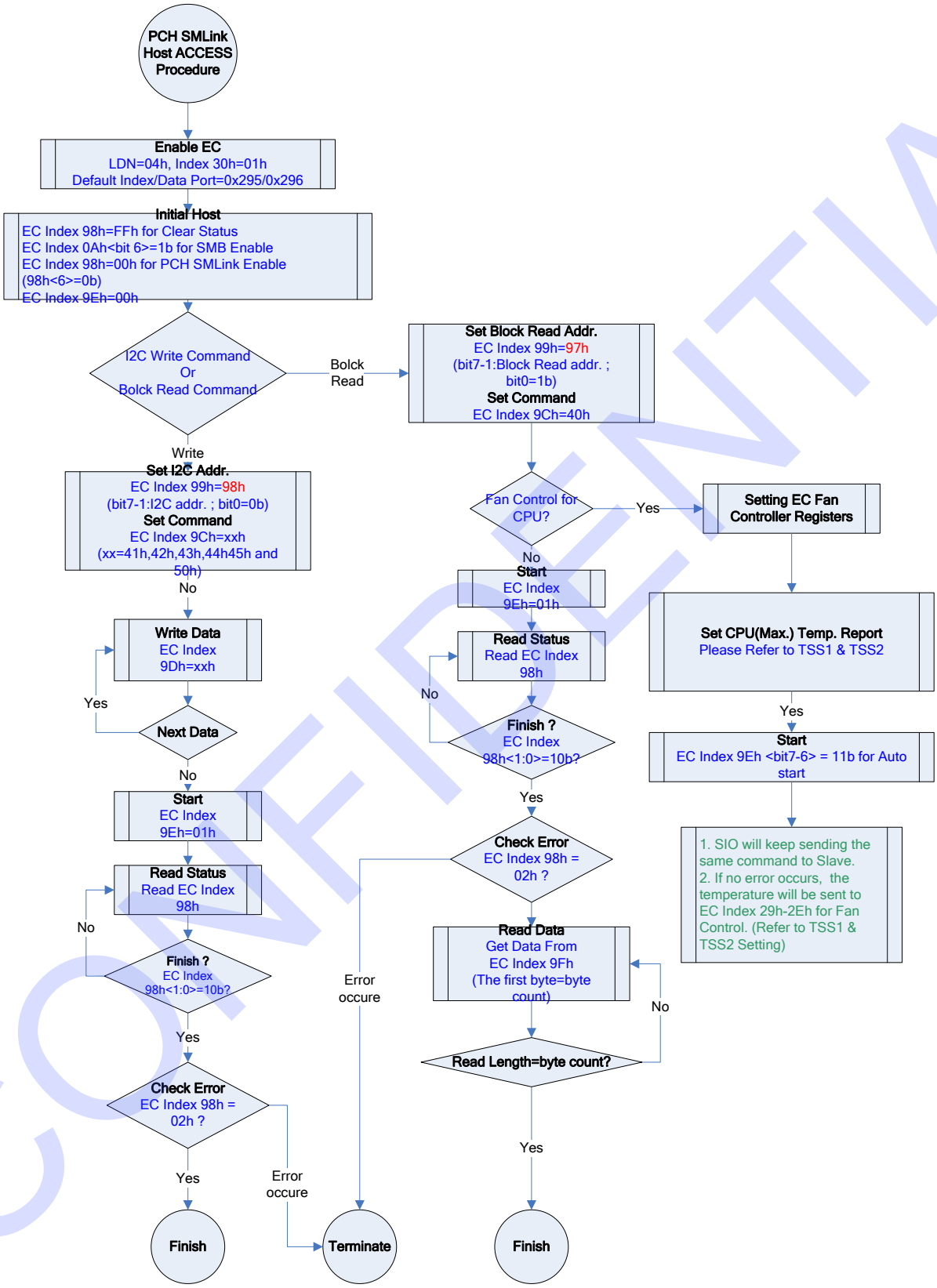

CONFIDENTIAL

Figure 9-22. DTS Multi-Scan Programming Procedure

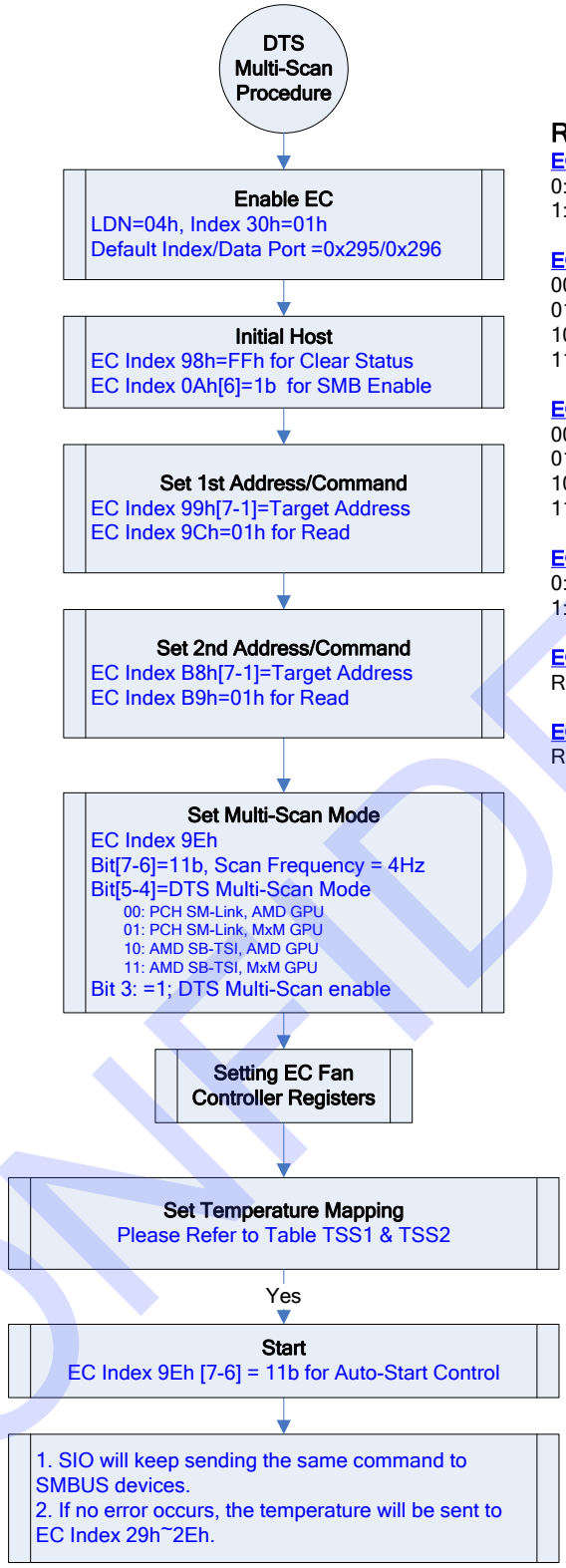

Registers Reference:

EC ,Index 0A[6]
0: SMB disable
1: SMB enable

EC ,Index 9E[7-6]: Auto-start control
00: Disable auto control
01: 16Hz
10: 8Hz
11: 4Hz

EC ,Index 9E[5-4]: DTS Multi-Scan selection
00: PCH SM-Link, AMD GPU
01: PCH SM-Link, MxM GPU
10: AMD SB-TSI, AMD GPU
11: AMD SB-TSI, MxM GPU

EC ,Index 9E[3]: DTS Multi-Scan enable
0: Disable
1:Enable

EC ,Index B8: Second SMBus Address Register

EC ,Index B9: Second SMBus Command Register

CONFIDENTIAL

9.7 BREATH LED

In S3, no POWER GOOD, LED_G will enter the breath led mode to control the LED light. In this mode, LED_G generates a modulation signal with its duty cycle gradually increasing or decreasing depending on the setting of BREATH LED control registers.

The breath LED mode should be used with 30K clock input. Users should decide LED's behavior first by setting the breath LED control registers before this mode is started; otherwise the breath LED will show unpredicatable behavior.
Figure 9-23. shows the behavior of the breath LED duty cycle controlled by the related breath LED control registers.

Figure 9-23. Breath LED Mode Waveform

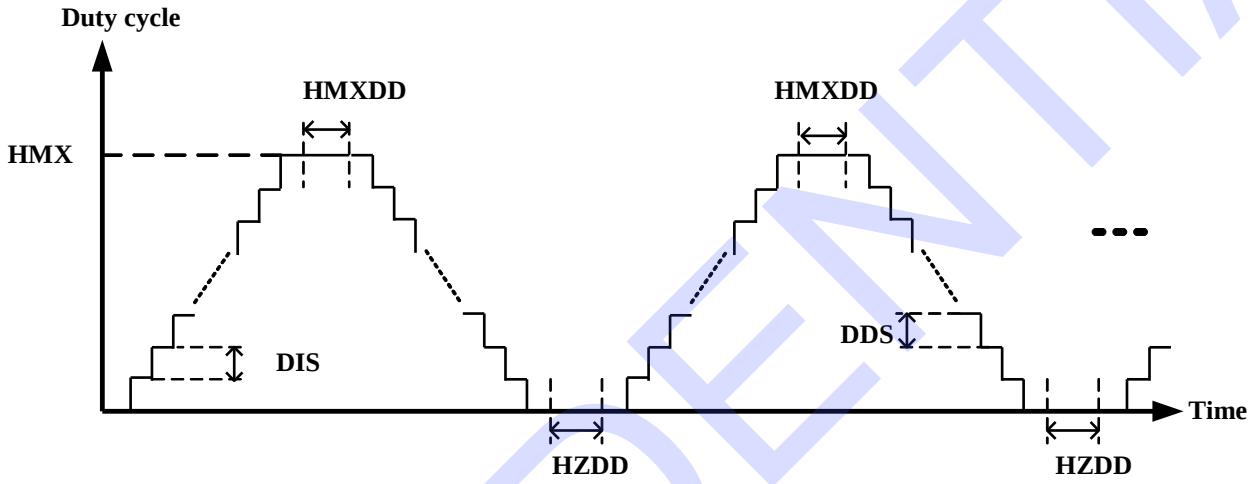

As the waveform illustrated above, the duty cycle increases or decreases step by step with each cycle in the breath LED mode. The increasing or decreasing track is linear and can be decided individually by DIS and DDS. The maximum duty cycle can be selected by HMXD. When the duty cycle increases to the maximum value, the breath LED can remain the maximum duty cycle for a priod of time, which is decided by HMXDD. On the contrary, The breath LED can remain the zero duty cycle for a priod of time, which is decided by HZDD.

CONFIDENTIAL

9.8 Serial Port (UART)

The IT8613E incorporates two enhanced serial ports that perform serial to parallel conversion on received data, and parallel to serial conversion on transmitted data. Each of the serial channels individually contains a programmable baud rate generator which is capable of dividing the input clock by a number ranging from 1 to 65535. The data rate of each serial port can be programmed from 115.2K baud down to 50 baud as well. The character options are programmable for 1 start bit; 1, 1.5 or 2 stop bits; even, odd, stick or no parity; and privileged interrupts.

Table 9-17. Serial Channel Registers

Register	DLAB*	Address	READ	WRITE
Data	0	Base + 0h	RBR (Receiver Buffer Register)	TBR (Transmitter Buffer Register)
Control	0 x x x 1 1	Base + 1h Base + 2h Base + 3h Base + 4h Base + 0h Base + 1h	IER (Interrupt Enable Register) IIR (Interrupt Identification Register) LCR (Line Control Register) MCR (Modem Control Register) DLL (Divisor Latch LSB) DLM (Divisor Latch MSB)	IER FCR (FIFO Control Register) LCR MCR DLL DLM
Status	x x x	Base + 5h Base + 6h Base + 7h	LSR (Line Status Register) MSR (Modem Status Register) SCR (Scratch Pad Register)	LSR MSR SCR

* DLAB is bit 7 of the Line Control Register.

9.8.1 Data Register

The TBR and RBR individually hold five to eight data bits. If the transmitted data are less than eight bits, it aligns to the LSB. Either received or transmitted data are buffered by a shift register, and are latched first by a holding register. Bit 0 of any word is first received and transmitted.

9.8.1.1 Receiver Buffer Register (RBR) (Read only, Address offset=0, DLAB=0)

This register receives and holds the incoming data. It contains a non-accessible shift register which converts the incoming serial data stream into a parallel 8-bit word.

9.8.1.2 Transmitter Buffer Register (TBR) (Write only, Address offset=0, DLAB=0)

This register holds and transmits the data via a non-accessible shift register, and converts the outgoing parallel data into a serial stream before data transmission.

CONFIDENTIAL

9.8.2 Control Register

9.8.2.1 Interrupt Enable Register (IER) (Read/Write, Address offset=1, DLAB=0)

The IER is to enable or disable four active high interrupts which activate the interrupt outputs with its lower four bits: IER(0), IER(1), IER(2), and IER(3).

Bit	Default	Description
7-4	-	**Reserved**
3	0	**Enable Modem Status Interrupt** Set this bit high to enable the modem status interrupt when one of the modem status registers changes its bit status.
2	0	**Enable Receiver Line Status Interrupt** Set this bit high to enable the receiver line status interrupt, which happens when overrun, parity, framing or break occurs.
1	0	**Enable Transmitter Holding Register Empty Interrupt** Set this bit high to enable the transmitter holding register empty interrupt.
0	0	**Enable Received Data Available Interrupt** Set this bit high to enable the received data available interrupt and time-out interrupt in the FIFO mode.

9.8.2.2 Interrupt Identification Register (IIR) (Read only, Address offset=2)

This register facilitates the host CPU to determine the interrupt priority and its source. The four existing interrupts are listed below in priority order.

1. Receiver Line Status (highest priority)
2. Received Data Ready
3. Transmitter Holding Register Empty
4. Modem Status (lowest priority)

When a privileged interrupt is pending and the interrupt type is stored in the IIR which is accessed by the host, the serial channel holds back all interrupts and indicates the pending interrupts with the highest priority to the host. Any new interrupts will not be acknowledged until the host access is completed. Please refer to the following table for the detail.

CONFIDENTIAL

Table 9-18. Interrupt Identification Register

FIFO Mode	Interrupt Identification Register			Interrupt Set and Reset Function			
Bit 3	**Bit 2**	**Bit 1**	**Bit 0**	**Priority**	**Interrupt Type**	**Interrupt Source**	**Interrupt Reset Control**
0	X	X	1	-	None	None	-
0	1	1	0	First	Receiver Line Status	OE, PE, FE, or BI	Read LSR
0	1	0	0	Second	Received Data Available	Received Data Available	Read RBR or FIFO drops below the trigger level
1	1	0	0	Second	Character Time-out Indication	No characters have been removed from or input to the RCVR FIFO during the last four character times and there is at least one character in it during this period.	Read RBR
0	0	1	0	Third	Transmitter Holding Register Empty	Transmitter Holding Register Empty	Read IIR if THRE is the Interrupt Source Write THR
0	0	0	0	Fourth	Modem Status	CTS#, DSR#, RI#, DCD#	Read MSR

Note: X = Not Defined

IIR(7), IIR(6): Set when FCR(0) = 1.
IIR(5), IIR(4): Always logic 0.
IIR(3): In the non-FIFO mode, this bit is a logic 0. In the FIFO mode, this bit is set along with bit 2 when a time-out Interrupt is pending.
IIR(2), IIR(1): Used to identify the highest priority interrupt pending.
IR(0): Used to indicate a pending interrupt in either a hard-wired prioritized or polled environment with a logic 0 state. In such a case, IIR contents may be used as a pointer that points to the appropriate interrupt service routine.

9.8.2.3 FIFO Control Register (FCR) (Write Only, Address offset=2)

This register is used to not only enable and clear the FIFO but also set the RCVR FIFO trigger level.

Bit	Default	Description
7-6	-	**Receiver Trigger Level Selection** These bits are to set the trigger level for the RCVR FIFO interrupt.
5-4	0	**Reserved**
3	0	This bit does not affect Serial Channel operation. RXRDY and TXRDY functions are not available on this chip.
2	0	**Transmitter FIFO Reset** This self-cleared bit clears all contents of the XMIT FIFO and resets its related counter to 0 via a logic "1".
1	0	**Receiver FIFO Reset** Setting this self-cleared bit to a logic "1" will clear all contents of the RCVR FIFO and resets its related counter to “0” (except the shift register).

CONFIDENTIAL

Bit	Default	Description
0	0	**FIFO Enable** XMIT and RCVR FIFOs are enabled when this bit is set high. XMIT whereas disabled and cleared respectively when this bit is cleared to low. This bit must be a logic "1" if data are written to the other bits of the FCR, or they will not be properly programmed. When this register is switched to the non-FIFO mode, all of its contents will be cleared.

Table 9-19. Receiver FIFO Trigger Level Encoding

FCR (7)	FCR (6)	RCVR FIFO Trigger Level
0	0	1 byte
0	1	4 bytes
1	0	8 bytes
1	1	14 bytes

9.8.2.4 Divisor Latches (DLL, DLM) (Read/Write, Address offset=0,1 DLAB=0)

Two 8-bit Divisor Latches (DLL and DLM) store the divisor values in a 16-bit binary format. They are loaded during initialization to generate a desired baud rate.

9.8.2.5 Baud Rate Generator (BRG)

Each serial channel contains a programmable BRG, which can take any clock input (from DC to 8 MHz) to generate standard ANSI/CCITT bit rates for the channel clocking with an external clock oscillator. The number of DLL or DLM is in 16-bit format, providing the divisor ranging from 1 to 2^{16} to obtain the desired baud rate. The output frequency is 16X data rate.

Table 9-20. Baud Rate Using (24 MHz ÷ 13) Clock

Desired Baud Rate	Divisor Used
50	2304
75	1536
110	1047
134.5	857
150	768
300	384
600	192
1200	96
1800	64
2000	58
2400	48
3600	32
4800	24
7200	16
9600	12
19200	6
38400	3
57600	2
115200	1

CONFIDENTIAL

9.8.2.6 Scratch Pad Register (Read/Write, Address offset=7)

This 8-bit register does not control the UART operation in any way. It is intended as a scratch pad register to be used by programmers to temporarily hold general purpose data.

9.8.2.7 Line Control Register (LCR) (Read/Write, Address offset=3)

LCR controls the format of the data character and supplies the information of the serial line.

Bit	Default	Description
7	0	**Divisor Latch Access Bit (DLAB)** This bit must be set high to access the Divisor Latches of the baud rate generator during READ or WRITE operation whereas set low to access Data Register (refer to page 121) or Interrupt Identification Register (IIR) (Read only, Address offset=2) (refer to page 122).
6	0	**Set Break** This bit forces the Serial Output (SOUT) to the spacing state (logic 0) by a logic 1, which will be preserved until a low level resetting LCR(6), enabling the serial port to alert the terminal in a communication system.
5	0	**Stick Parity** When this bit and LCR(3) are high at the same time, the parity bit is transmitted and then detected by a receiver in an opposite state by LCR(4) to force the parity bit into a known state and to check the parity bit in a known state.
4	0	**Even Parity Selection** When the parity is enabled (LCR(3) = 1), 0: Odd parity 1: Even parity
3	0	**Parity Enable** A parity bit, located between the last data word bit and stop bit, will be generated or checked (transmit or receive data) when LCR(3) is high.
2	0	**Number of Stop Bit** This bit specifies the number of stop bits in each serial character, as summarized in Table 9-21. Stop Bit Number Encoding.
1-0	00	**Word Length Select [1:0]** 11: 8 bits 10: 7 bits 01: 6 bits 00: 5 bits

Table 9-21. Stop Bit Number Encoding

LCR (2)	Word Length	No. of Stop Bit
0	-	1
1	5 bits	1.5
1	6 bits	2
1	7 bits	2
1	8 bits	2

Note: The receiver will ignore all stop bits beyond the first, regardless of the number used in transmission.

CONFIDENTIAL

9.8.2.8 Modem Control Register (MCR) (Read/Write, Address offset=4)

This register controls the interface by the modem or data set (or device emulating a modem).

Bit	Default	Description
7-5	-	**Reserved**
4	0	**Internal Loopback** This bit provides a loopback feature for diagnostic test of the serial channel when set high. Serial Output (SOUT) is set to the Marking State Shift Register output loops back into the Receiver Shift Register. All Modem Control inputs (CTS#, DSR#, RI# and DCD#) are disconnected. The four Modem Control outputs (DTR#, RTS#, OUT1 and OUT2) are internally connected to the four Modem Control inputs and forced to inactive high then the transmitted data are immediately received, allowing the processor to verify the transmitted and received data path of the serial channel.
3	0	**OUT2** The Output 2 bit enables the serial port interrupt output by a logic 1.
2	0	**OUT1** This bit does not have an output pin and can only be read or written by CPU.
1	0	**Request to Send (RTS)** This bit controls the Request to Send (RTS#), which is in an inverse logic state with that of MCR(1).
0	0	**Data Terminal Ready (DTR)** This bit controls the Data Terminal Ready (DTR#), which is in an inverse logic state with that of the MCR(0).

9.8.3 Status Registers

9.8.3.1 Line Status Register (LSR) (Read/Write, Address offset=5)

This register provides the status indication and is usually the first register read by the CPU to determine the cause of an interrupt or to poll the status of each serial channel. The contents of the LSR are described below:

Bit	Default	Description
7	0	**Error in Receiver FIFO** In the 16450 mode, this bit is always 0. In the FIFO mode, it is set high when there is at least one parity error, framing or break interrupt in the FIFO. This bit is cleared when the CPU reads the LSR if there are no subsequent errors in the FIFO.
6	1	**Transmitter Empty** This **read only** bit indicates that the Transmitter Holding Register and Transmitter Shift Register are both empty. Otherwise, this bit is "0" and has the same function as that in the FIFO mode.
5	1	**Transmitter Holding Register Empty (THRE)** This **read only** bit indicates that the TBR is empty and is ready to accept a new character for transmission. It is set high when a character is transferred from the THR into the Transmitter Shift Register, causing a priority 3 IIR interrupt which is cleared by a read of IIR. In the FIFO mode, it is set when the XMIT FIFO is empty, and is cleared when at least one byte is written to the XMIT FIFO.
4	0	**Line Break** The Line Break (LB) Interrupt status bit indicates that the last character received is a break character, which is invalid but complete. It includes parity and stop bits. This situation occurs when the received data input is held in the spacing (logic 0) for longer than a full word transmission time (start bit + data bits + parity + stop bit). When any of these error conditions is detected (LSR(1) to LSR(4)), a Receiver Line Status interrupt (priority 1) will be generated in IIR, with bit 2 of Interrupt Enable Register (IER) (Read/Write, Address offset=1, DLAB=0) previously enabled(refer to page 122).

CONFIDENTIAL

Bit	Default	Description
3	0	**Framing Error (FE)** A logic 1 indicates that the stop bit in the received character is not valid. It will be reset low when CPU reads the contents of the LSR.
2	0	**Parity Error (PE)** A logic 1 indicates that the received data character does not have the correct even or odd parity, as selected by LCR(4). It will be reset to "0" whenever LSR is read by CPU.
1	0	**Overrun Error (OE)** A logic 1 indicates that the RBR has been overwritten by the next character before it had been read by the CPU. In the FIFO mode, OE occurs when FIFO is full and the next character has been completely received by the Shift Register. It will be reset when LSR is read by the CPU.
0	0	**Data Ready** A logic 1 indicates a character has been received by RBR. A logic 0 indicates all the data in RBR or RCVR FIFO have been read.

9.8.3.2 Modem Status Register (MSR) (Read/Write, Address offset=6)

This 8-bit register indicates the current state of the control lines with modems or the peripheral devices in addition to this current state information. Four of these eight bits, MSR(4) - MSR(7), can provide the state change information when the modem control input changes the state. It is reset low when the host reads the MSR.

Bit	Default	Description
7	0	**Data Carrier Detect(DCD)** This bit indicates the complement status of Data Carrier Detect (DCD#) input. If MCR(4) = 1, MSR(7) is equivalent to OUT2 of the MCR.
6	0	**Ring Indicator(RI)** This bit indicates the complement status to the RI# input. If MCR(4)=1, MSR(6) is equivalent to OUT1 in the MCR.
5	0	**Data Set Ready(DSR)** This bit indicates that the modem is ready to provide received data to the serial channel receiver circuitry. If the serial channel is in the loop mode (MCR(4) = 1), MSR(5) is equivalent to DTR# of MCR.
4	0	**Clear to Send(CTS)** This bit indicates the complement of CTS# input. When the serial channel is in the Loop mode (MCR(4)=1), MSR(5) is equivalent to RTS# of MCR.
3	0	**Delta Data Carrier Detect(DDCD)** This bit indicates that the DCD# input state has been changed since being read by the host last time.
2	0	**Trailing Edge Ring Indicator(TERI)** This bit indicates that the RI input state to the serial channel has been changed from low to high since being read by the host last time. The change in a logic “1” does not activate the TERI.
1	0	**Delta Data Set Ready(DDSR)** A logic "1" indicates that the DSR# input state to the serial channel has been changed since being read by the host last time.
0	0	**Delta Clear to Send(DCTS)** This bit indicates the CTS# input to the chip has changed the state since MSR was read last time.

CONFIDENTIAL

9.8.4 Reset

The reset of the IT8613E should be held to an idle mode reset high for 500 ns until initialization, which causes the initialization of the internal clock counters of transmitter and receiver.

Table 9-22. Reset Control of Register and Pinout Signal

Register/Signal	Reset Control	Reset Status
Interrupt Enable Register	Reset	All bits Low
Interrupt Identification Register	Reset	Bit 0 is high and bits 1-7 are low
FIFO Control Register	Reset	All bits Low
Line Control Register	Reset	All bits Low
Modem Control Register	Reset	All bits Low
Line Status Register	Reset	Bits 5 and 6 are high, others are low
Modem Status Register	Reset	
SOUT1, SOUT2	Reset	Bits 0-3 low, bits 4-7 input signals
RTS1#, RTS2#, DTR1#, DTR2#	Reset	High
IRQ of Serial Port	Reset	High
		High Impedance

9.8.5 Programming

Each serial channel of the IT8613E is programmed by control registers, whose contents define the character length, number of stop bits, parity, baud rate and modem interface. Even though these control registers can be written in any given order, IER should be the last register written because it controls whether the interrupt is enabled or not. After the port is programmed, these registers still can be updated whenever the port does not transfer data.

9.8.6 Software Reset

This approach allows the serial port to return to a completely known state without a system reset. It is achieved by writing the required data to LCR, DLL, DLM and MCR. LSR and RBR must be read before interrupts are enabled to clear out any residual data or status bits that may be invalid for subsequent operations.

9.8.7 Clock Input Operation

The input frequency of the Serial Channel is 24 MHz ÷ 13, not exactly 1.8432 MHz.

9.8.8 FIFO Interrupt Mode Operation

(1) RCVR Interrupt

By setting bit 0 of FIFO Control Register (FCR) (Write Only, Address offset=2) (refer to page 123) and bit 0 of Interrupt Enable Register (IER) (Read/Write, Address offset=1, DLAB=0) (refer to page 122) high, the RCVR FIFO and receiver interrupts are enabled. The RCVR interrupt occurs under the following conditions:

The receive data available interrupt will be issued only when the FIFO has reached its programmed trigger level and cleared as soon as the FIFO drops below its trigger level.

The receiver line status interrupt has higher priority over the received data available interrupt.

The time-out timer will be reset after receiving a new character or after the host reads RCVR FIFO whenever a time-out interrupt occurs. The timer will be reset when the host reads one character from RCVR FIFO.

CONFIDENTIAL

For the RCVR FIFO time-out interrupt, it will occur under the following conditions by enabling the RCVR FIFO and receiver interrupts:

The RCVR FIFO time-out interrupt will occur only if there is at least one character in FIFO whenever the interval between the most recently received serial character and the most recent Host READ from the FIFO is longer than four consecutive character times.

The time-out timer will be reset after receiving a new character or after the host reads RCVR FIFO whenever a time-out interrupt occurs. The timer will be reset when the host reads one character from RCVR FIFO.

(2) XMIT Interrupt

By setting bit 0 of FIFO Control Register (FCR) (Write Only, Address offset=2) (refer to page 123) and bit 1 of Interrupt Enable Register (IER) (Read/Write, Address offset=1, DLAB=0) (refer to page 122) high, the XMIT FIFO and transmitter interrupts are enabled. The XMIT interrupt occurs under the following conditions:

a. The transmitter interrupt occurs when the XMIT FIFO is empty, and it will be reset if the THR is written or the IIR is read.

b. The transmitter FIFO empty indications will be delayed for one character time minus the last stop bit time whenever the following condition occurs:

   THRE = 1 and there have not been at least two bytes in the transmitter FIFO at the same time since the last THRE = 1. The transmitter interrupt after changing FCR(0) will be immediate if it is enabled. Once the first transmitter interrupt is enabled, the THRE indication will be delayed for one character time minus the last stop bit time.

The character time-out and RCVR FIFO trigger level interrupts have the same priority as the received data available interrupt. The XMIT FIFO empty has the same priority as the transmitter holding register empty interrupt.

FIFO Polled Mode Operation [FCR(0)=1, and IER(0), IER(1), IER(2), IER(3) or all are 0].

Either or both XMIT and RCVR can be in this operation mode. The operation mode can be programmed by users and is responsible for checking the RCVR and XMIT status via LSR described below:

LSR(7): RCVR FIFO error indication
LSR(6): XMIT FIFO and Shift register empty
LSR(5): The XMIT FIFO empty indication
LSR(4) - LSR(1): Specify that errors have occurred. The character error status is handled in the same way as that in the interrupt mode. The IIR is not affected since IER(2)=0.
LSR(0): High whenever RCVR FIFO contains at least one byte.
No trigger level is reached or time-out condition indicated in FIFO Polled Mode.

CONFIDENTIAL

9.9 Keyboard Controller (KBC)

The keyboard controller is implemented using an 8-bit microcontroller that is capable of executing the 8042 instruction set. For general information, please refer to the description of the 8042 in the 8-bit controller handbook. In addition, the microcontroller can enter the power-down mode by executing two types of power-down instructions.

Figure 9-24. Keyboard and Mouse Interface

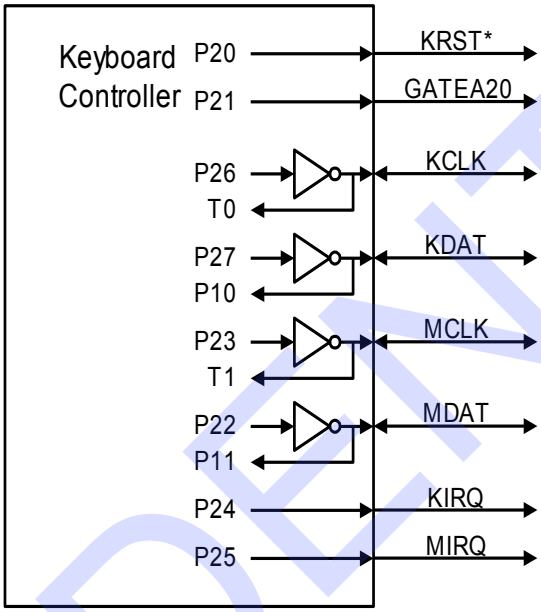

9.9.1 Host Interface

The keyboard controller interfaces with the system through the 8042 style host interface. The following table shows how the interface decodes the control signals.

Table 9-23. Data Register READ/WRITE Controls

Host Address [Note]	R/W*	Function
60h	R	READ DATA
60h	W	WRITE DATA, (Clear F1)
64h	R	READ Status
64h	W	WRITE Command, (Set F1)

Note: These are the default values of LDN5, 60h and 61h (DATA); LDN5, 62h and 63h (Command). All these registers are programmable.

READ DATA: This is an 8-bit **read only** register. When read, the KIRQ output is cleared and OBF flag in the status register is cleared.
WRITE DATA: This is an 8-bit **write only** register. When written, the F1 flag of the Status register is cleared and the IBF bit is set.
READ Status: This is an 8-bit **read only** register. Refer to the description of the Status register for more information.

WRITE Command: This is an 8-bit **write only** register. When written, both F1 and IBF flags of the Status register are set.

CONFIDENTIAL

9.9.2 Data Registers and Status Register

The keyboard controller provides two data registers, one is DBIN for data input, and the other is DBOUT for data output. Both are 8-bit wide. A write (microcontroller) to the DBOUT will load Keyboard Data Read Buffer, set OBF flag and set the KIRQ output. A read (microcontroller) of DBIN will read the data from the Keyboard Data or Command Write Buffer and clear the IBF flag.

The status register holds information concerning the status of the data registers, the internal flags, and some user-defined status bits. Please refer to Table 9-24. Status Register below. The bit 0 OBF is set to “1” when the microcontroller writes data into DBOUT, and is cleared when the system initiates DATA READ operation. The bit 1 IBF is set to “1” when the system initiates WRITE operation, and is cleared when the microcontroller executes an “IN A, DBB” instruction. The F0 and F1 flags can be set or reset when the microcontroller executes clear and complement flag instructions. F1 also holds the system WRITE information when the system performs WRITE operation.

Table 9-24. Status Register

7	6	5	4	3	2	1	0
ST7	ST6	ST5	ST4	F1	F0	IBF	OBF

9.9.3 Keyboard and Mouse Interface

KCLK is a keyboard clock pin. Its output is the inversion of pin P26 of the microcontroller, and the input of KCLK is connected to the T0 pin of the microcontroller. KDAT is the keyboard data pin; its output is the inversion of pin P27 of the microcontroller, and the input of KDAT is connected to the P10 of the microcontroller. MCLK is the mouse clock pin. Its output is the inversion of pin P23 of the microcontroller, and the input of MCLK is connected to the T1 pin of the microcontroller. MDAT is the Mouse data pin. Its output is the inversion of pin P22 of the microcontroller, and the input of MDAT is connected to the P11 of the microcontroller. KRST# is pin P20 of the microcontroller. GATEA20 is the pin P21 of the microcontroller. These two pins are used as software-controlled or user defined outputs. External pull-ups may be required for these pins.

9.9.4 KIRQ and MIRQ

KIRQ is the interrupt request for the keyboard (Default IRQ1), and MIRQ is the interrupt request for the mouse (Default IRQ12). KIRQ is internally connected to P24 pin of the microcontroller, and MIRQ is internally connected to pin P25 of the microcontroller.

CONFIDENTIAL

9.10 Consumer Remote Control (TV Remote) IR (CIR)

9.10.1 Overview

CIR is used in the consumer remote control equipment, and is a programmable amplitude shift keyed (ASK) serial communication protocol. By adjusting frequencies, baud rate divisors and sensitivity ranges, the CIR registers are able to support the popular protocols such as RC-5, NEC, and RECS-80. Software driver programming can support new protocols.

9.10.2 Features

- Supports 30 kHz - 57 kHz (low frequency) or 400 kHz - 500 kHz (high frequency) carrier transmission
- Baud rate up to 115200 BPS (high frequency)
- Demodulation optional
- Supports transmission run-length encoding and deferral function
- 32-byte FIFO for data transmission or data reception

9.10.3 Block Diagram

CIR consists of two parts, transmitter and receiver. Regarding the transmitter part, it is responsible for transmitting data to FIFO, processing FIFO data by serialization and modulation and sending out data through the LED device. As for the receiver part, it is responsible for receiving data, processing data by demodulation and deserialization and storing data in the Receiver FIFO.

Figure 9-25. CIR Block Diagram

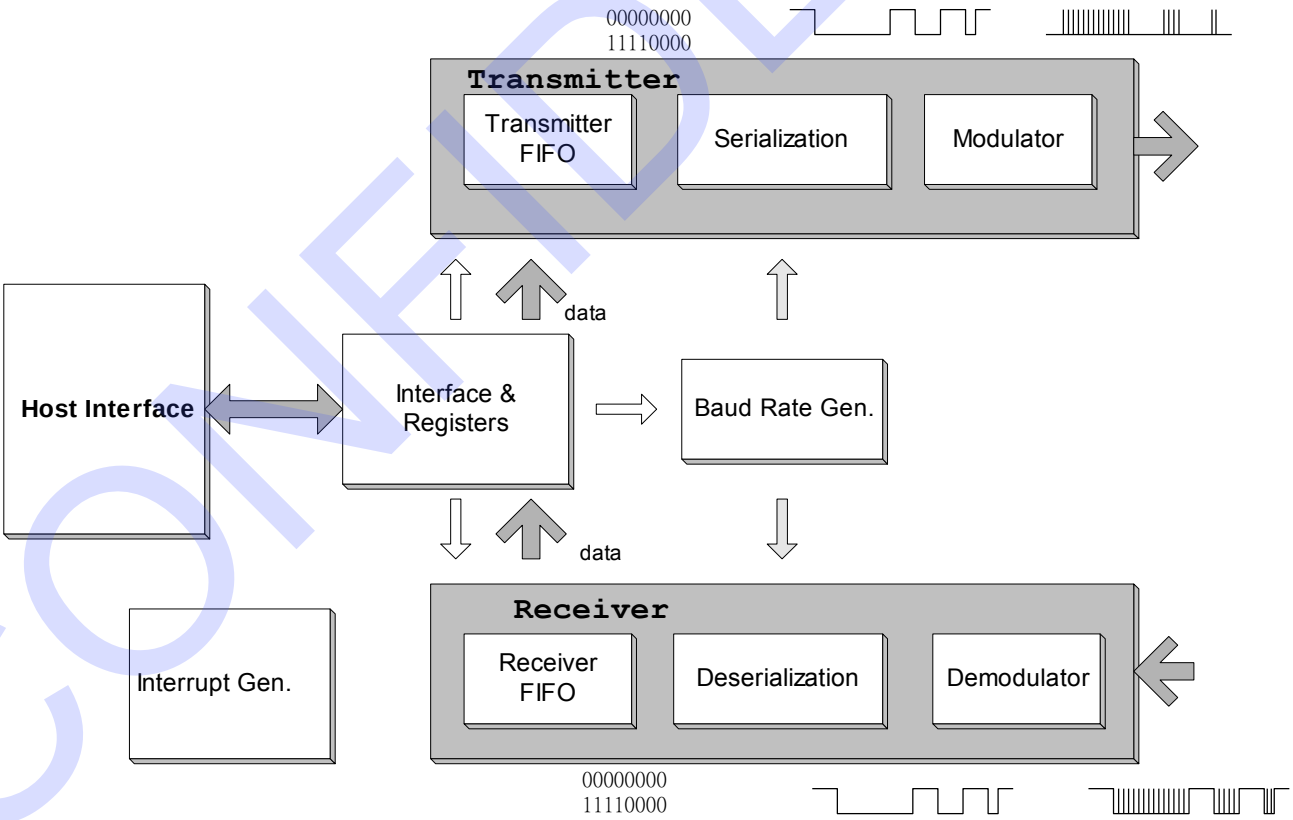

CONFIDENTIAL

9.10.4 Transmit Operation

The data written to the Transmitter FIFO will be exactly serialized from LSB to MSB, modulated with the carrier frequency and sent to the CIRTX output. The data are either in bit-string format or run-length decode.

Before the data transmission can be started, code byte write operation must be performed to the Transmitter FIFO DR. Bit TXRLE of TCR1 needs to be set to "1" before the data in run-length decode can be written into the Transmitter FIFO. Setting TXENDF of TCR1 will enable the data transmission deferral, and avoid the Transmitter FIFO underrun. The bit width of the serialized bit string is determined by the value programmed in the baud rate divisor registers, BDLR and BDHR. When the two bits, HCFS and CFQ[4:0], are set, either the high-speed or low-speed carrier range is selected, and the corresponding carrier frequency will also be determined. Bit TXMPM[1:0] and TXMPW[2:0] specify the pulse number in a bit width and the required duty cycles of the carrier pulse according to the communication protocol. Only a logic "0" can activate the Transmitter LED in the format of a series of modulating pulses.

9.10.5 Receive Operation

The Receiver function will be enabled if bit RXEN of RCR is set to "1". Either demodulated or modulated RX# signal is loaded into Receiver FIFO, and bit RXEND of RCR determines whether the demodulation logic should be used or not. It determines the baud rate by programming the baud rate divisor registers BDLR and BDHR, and the carrier frequency by programming bit HCFS and CFQ[4:0]. Set RDWOS to "0" to synchronize. Bit RXACT of RCR is set to "1" when the serial data or the selected carrier is incoming, and the sampled data will then be kept in Receiver FIFO. Write "1" to bit RXACT to stop the Receiver operation whereas "0" to bit RXEN to disable it.

9.10.6 Register Description and Address

Table 9-25. CIR Register

Register Name	R/W	Address	Default
CIR Data Register (DR)	R/W	Base + 0h	FFh
CIR Interrupt Enable Register (IER)	R/W	Base + 1h	00h
CIR Receiver Control Register (RCR)	R/W	Base + 2h	01h
CIR Transmitter Control Register 1 (TCR1)	R/W	Base + 3h	00h
CIR Transmitter Control Register 2 (TCR2)	R/W	Base + 4h	5Ch
CIR Transmitter Status Register (TSR)	R	Base + 5h	00h
CIR Receiver Status Register (RSR)	R	Base + 6h	00h
CIR Baud Rate Divisor Low Byte Register (BDLR)	R/W	Base + 5h	00h
CIR Baud Rate Divisor High Byte Register (BDHR)	R/W	Base + 6h	00h
CIR Interrupt Identification Register (IIR)	R/W	Base + 7h	01h

9.10.6.1 CIR Data Register (DR)

The DR, an 8-bit **read/write** register, is the data port for CIR. Data are transmitted and received through it.

Address: Base Address + 0h

Bit	R/W	Default	Description
7-0	R/W	FFh	**CIR Data Register (DR[7:0])** Writing data to this register causes data to be written to Transmitter FIFO. Reading data from this register causes data to be received from Receiver FIFO.

CONFIDENTIAL

9.10.6.2 CIR Interrupt Enable Register (IER)

The IER, an 8-bit **read/write** register, is to enable the CIR interrupt request.

Address: Base Address + 1h

Bit	R/W	Default	Description
7	R/W	0b	**Reserved**
6	R/W	0b	**Reserved**; must be 0b
5	R/W	0b	**Reset** The function of this bit is software reset. Writing "1" to this bit resets register DR, IER, TCR1, BDLR, BDHR and IIR and then it will be self-cleared to the initial value.
4	R/W	0b	**Baud Rate Register Enable (BR)** This bit is to control whether the baud rate register can enable read/write function or not. 1: Enable 0: Disable
3	R/W	0b	**Interrupt Enable Control (IEC)** This bit is to control whether the interrupt function can be enabled or not. 1: Enable 0: Disable
2	R/W	0b	**Receiver FIFO Overrun Interrupt Enable (RFOIE)** This bit is to control Receiver FIFO Overrun Interrupt request. 1: Enable 0: Disable
1	R/W	0b	**Receiver Data Available Interrupt Enable (RDAIE)** This bit is to enable Receiver Data Available Interrupt request. The Receiver will generate this interrupt when the data available in FIFO exceed the FIFO threshold level. 1: Enable 0: Disable
0	R/W	0b	**Transmitter Low Data Level Interrupt Enable (TLDLIE)** This bit is to enable Transmitter Low Data Level Interrupt request. The Transmitter will generate this interrupt when the data available in FIFO are less than the FIFO threshold Level. 1: Enable 0: Disable

CONFIDENTIAL

9.10.6.3 CIR Receiver Control Register (RCR)

The RCR, an 8-bit **read/write** register, is to control the CIR Receiver.

Address: Base Address + 2h

Bit	R/W	Default	Description
7	R/W	0b	**Receiver Data without Sync. (RDWOS)** This bit is to control the sync. logic for received data. Set this bit to "1" to obtain the received data without sync. logic. Set this bit to "0" to obtain the received data with sync. logic.
6	R/W	0b	**High-Speed Carrier Frequency Select (HCFS)** This bit is to select the carrier frequency between the high-speed and low-speed. 0: 30-58 kHz (Default) 1: 400-500 kHz
5	R/W	0b	**Receiver Enable (RXEN)** This bit is to enable the Receiver function. Receiver Enable and RXACT will be activated if the selected carrier frequency is received. 1: Enable 0: Disable
4	R/W	0b	**Receiver Demodulation Enable (RXEND)** This bit is to control the Receiver Demodulation logic. If the Receiver device can not demodulate the correct carrier, set this bit to "1" to enable it. 1: Enable 0: Disable
3	R/W	0b	**Receiver Active (RXACT)** This bit is to control the Receiver operation. This bit is set to "0" when the Receiver is inactive. This bit will be set to "1" when the Receiver detects a pulse (RXEND=0) or pulse-train (RXEND=1) with the correct carrier frequency. The Receiver then starts to sample the input data when Receiver Active is set. Write a "1" to this bit to clear the Receiver Active condition and make the Receiver enter the inactive mode.
2-0	R/W	001b	**Receiver Demodulation Carrier Range (RXDCR[2:0])** These three bits are to set the tolerance of the Receiver. For the detailed demodulation carrier frequency, please refer to Table 9-27. Receiver Demodulation Low Frequency (HCFS = 0) and Table 9-28. Receiver Demodulation High Frequency (HCFS = 1) on page 139 and 140.

CONFIDENTIAL

9.10.6.4 CIR Transmitter Control Register 1 (TCR1)

The TCR1, an 8-bit **read/write** register, is used to control the Transmitter.

Address: Base Address + 3h

Bit	R/W	Default	Description
7	R/W	0b	**FIFO Clear (FIFOCLR)** Writing a "1" to this bit clears FIFO. This bit is then self-cleared to "0".
6	R/W	0b	**Internal Loopback Enable (ILE)** This bit is to execute internal loopback for test and must be "0" in normal operation. 1: Enable 0: Disable
5-4	R/W	0b	**FIFO Threshold Level (FIFOTL)** These two bits are used to set the FIFO threshold level. The FIFO length is 32 bytes for TX or RX function (ILE = 0) in normal operation and 16 bytes for both TX and RX in the internal loopback mode (ILE = 1). **16-Byte Mode** / **32-Byte Mode** 00: 1 / 1 (Default) 01: 3 / 7 10: 7 / 17 11: 13 / 25
3	R/W	0b	**Transmitter Run Length Enable (TXRLE)** This bit controls the Transmitter Run Length encoding/decoding mode, which condenses a series of "1" or "0" into one byte with the bit value stored in bit 7 and number of bits minus 1 in bit 6-0. 1: Enable 0: Disable
2	R/W	0b	**Transmitter Deferral (TXENDF)** This bit is to avoid Transmitter underrun condition. When this bit is set to "1", the Transmitter FIFO data will be kept until the transmitter time-out condition occurs, or FIFO reaches full.
1-0	R/W	0b	**Transmitter Modulation Pulse Mode (TXMPM[1:0])** These two bits are to define the Transmitter modulation pulse mode. **TXMPM[1:0]** **Modulation Pulse Mode** C_pls mode (Default): Pulses are generated continuously for the entire logic 0 bit period. 8_pls mode: 8 pulses are generated for each logic 0 bit. 6_pls mode: 6 pulses are generated for each logic 0 bit. 11: Reserved.

CONFIDENTIAL

9.10.6.5 CIR Transmitter Control Register (TCR2)

The TCR2, an 8-bit **read/write** register, is to determine the carrier frequency.

Address: Base Address + 4h

Bit	R/W	Default	Description
7-3	R/W	01011b	**Carrier Frequency (CFQ[4:0])** These five bits are to determine the modulation carrier frequency. Please refer to the following table.
2-0	R/W	100b	**Transmitter Modulation Pulse Width (TXMPW[2:0])** These three bits are to set the Transmitter Modulation pulse width. The duty cycle of the carrier will be determined according to the setting of the carrier frequency and the selection of Transmitter Modulation pulse width. **TXMPW[2:0]** — **HCFS = 0** — **HCFS = 1** 000 — Reserved — Reserved 001 — Reserved — Reserved 010 — 6 μs — 0.7 μs 011 — 7 μs — 0.8 μs **100** — **8.7 μs** — **0.9 μs (Default)** 101 — 10.6 μs — 1.0 μs 110 — 13.3 μs — 1.16 μs 111 — Reserved — Reserved

CONFIDENTIAL

Table 9-26. Modulation Carrier Frequency

CFQ	Low Frequency (HCFS =0)	High Frequency (HCFS = 1)
00000	27 kHz	-
00010	29 kHz	-
00011	30 kHz	400 kHz
00100	31 kHz	-
00101	32 kHz	-
00110	33 kHz	-
00111	34 kHz	-
01000	35 kHz	450 kHz
01001	36 kHz	-
01010	37 kHz	-
01011	**38 kHz (default)**	**480 kHz (default)**
01100	39 kHz	-
01101	40 kHz	500 kHz
01110	41 kHz	-
01111	42 kHz	-
10000	43 kHz	-
10001	44 kHz	-
10010	45 kHz	-
10011	46 kHz	-
10100	47 kHz	-
10101	48 kHz	-
10110	49 kHz	-
10111	50 kHz	-
11000	51 kHz	-
11001	52 kHz	-
11010	53 kHz	-
11011	54 kHz	-
11100	55 kHz	-
11101	56 kHz	-
11110	57 kHz	-
11111	58 kHz	-

CONFIDENTIAL

Table 9-27. Receiver Demodulation Low Frequency (HCFS = 0)

RXDCR	001		010		011		100		101		110		
CFQ	Min.	Max.	Min.	Max.	Min.	Max.	Min.	Max.	Min.	Max.	Min.	Max.	(Hz)
00001	26.25	29.75	24.50	31.50	22.75	33.25	21.00	35.00	19.25	36.75	17.50	38.50	28k
00010	27.19	30.81	25.38	32.63	23.56	34.44	21.75	36.25	19.94	38.06	18.13	39.88	29k
00011	28.13	31.88	26.25	33.75	24.38	35.63	22.50	37.50	20.63	39.38	18.75	41.25	30k
00100	29.06	32.94	27.13	34.88	25.19	36.81	23.25	38.75	21.31	40.69	19.38	42.63	31k
00101	30.00	34.00	28.00	36.00	26.00	38.00	24.00	40.00	22.00	42.00	20.00	44.00	32k
00110	30.94	35.06	28.88	37.13	26.81	39.19	24.75	41.25	22.69	43.31	20.63	45.38	33k
00111	31.88	36.13	29.75	38.25	27.63	40.38	25.50	42.50	23.38	44.63	21.25	46.75	34k
01000	32.81	37.19	30.63	39.38	28.44	41.56	26.25	43.75	24.06	45.94	21.88	48.13	35k
01001	33.75	38.25	31.50	40.50	29.25	42.75	27.00	45.00	24.75	47.25	22.50	49.50	36k
01010	34.69	39.31	32.38	41.63	30.06	43.94	27.75	46.25	25.44	48.56	23.13	50.88	37k
01011	**35.63**	**40.38**	**33.25**	**42.75**	**30.88**	**45.13**	**28.50**	**47.50**	**26.13**	**49.88**	**23.75**	**52.25**	**38k**
01100	36.56	41.44	34.13	43.88	31.69	46.31	29.25	48.75	26.81	51.19	24.38	53.63	39k
01101	37.50	42.50	35.00	45.00	32.50	47.50	30.00	50.00	27.50	52.50	25.00	55.00	40k
01110	38.44	43.56	35.88	46.13	33.31	48.69	30.75	51.25	28.19	53.81	25.63	56.38	41k
01111	39.38	44.63	36.75	47.25	34.13	49.88	31.50	52.50	28.88	55.13	26.25	57.75	42k
10000	40.31	45.69	37.63	48.38	34.94	51.06	32.25	53.75	29.56	56.44	26.88	59.13	43k
10001	41.25	46.75	38.50	49.50	35.75	52.25	33.00	55.00	30.25	57.75	27.50	60.50	44k
10010	42.19	47.81	39.38	50.63	36.56	53.44	33.75	56.25	30.94	59.06	28.13	61.88	45k
10011	43.13	48.88	40.25	51.75	37.38	54.63	34.50	57.50	31.63	60.38	28.75	63.25	46k
10100	44.06	49.94	41.13	52.88	38.19	55.81	35.25	58.75	32.31	61.69	29.38	64.63	47k
10101	45.00	51.00	42.00	54.00	39.00	57.00	36.00	60.00	33.00	63.00	30.00	66.00	48k
10110	45.94	52.06	42.88	55.13	39.81	58.19	36.75	61.25	33.69	64.31	30.63	67.38	49k
10111	46.88	53.13	43.75	56.25	40.63	59.38	37.50	62.50	34.38	65.63	31.25	68.75	50k
11000	47.81	54.19	44.63	57.38	41.44	60.56	38.25	63.75	35.06	66.94	31.88	70.13	51k
11001	49.18	54.55	46.88	57.69	44.78	61.22	42.86	65.22	41.10	69.77	39.47	75.00	52k
11010	49.69	56.31	46.38	59.63	43.06	62.94	39.75	66.25	36.44	69.56	33.13	72.88	53k
11011	50.63	57.38	47.25	60.75	43.88	64.13	40.50	67.50	37.13	70.88	33.75	74.25	54k
11100	51.56	58.44	48.13	61.88	44.69	65.31	41.25	68.75	37.81	72.19	34.38	75.63	55k
11101	52.50	59.50	49.00	63.00	45.50	66.50	42.00	70.00	38.50	73.50	35.00	77.00	56k
11110	53.44	60.56	49.88	64.13	46.31	67.69	42.75	71.25	39.19	74.81	35.63	78.38	57k

CONFIDENTIAL

Table 9-28. Receiver Demodulation High Frequency (HCFS = 1)

RXDCR	001		010		011		100		101		110		
CFQ	Min.	Max.	Min.	Max.	Min.	Max.	Min.	Max.	Min.	Max.	Min.	Max.	(Hz)
00011	375	425	350	450	325	475	300	500	275	525	250	550	400k
01000	421.9	478.1	393.8	506.3	365.6	534.4	337.5	562.5	309.4	590.6	281.3	618.8	450k
01011	450	510	420	540	390	570	360	600	330	630	300	660	**480k**
01011	468.8	531.3	437.5	562.5	406.3	593.8	375	625	343.8	656.3	312.5	687.5	500k

9.10.6.6 CIR Transmitter Status Register (TSR)

The TSR, an 8-bit **read only** register, provides the Transmitter FIFO status.

Address: Base Address + 5h

Bit	R/W	Default	Description
7-6	R	-	**Reserved**
5-0	R	000000b	**Transmitter FIFO Byte Count (TXFBC[5:0])** Return the number of bytes left in the Transmitter FIFO.

9.10.6.7 CIR Receiver FIFO Status Register (RSR)

The RSR, an 8-bit **read only** register, provides the Receiver FIFO status.

Address: Base Address + 6h

Bit	R/W	Default	Description
7	R	0b	**Receiver FIFO Time-out (RXFTO)** This bit will be set to "1" when a Receiver FIFO time-out condition occurs. Followings are the conditions required for the occurrence of Receiver FIFO time-out: 1. At least one byte of data are queued in the Receiver FIFO for more than 64 ms. 2. The Receiver has been inactive (RXACT=0) for more than 64 ms.
6	-	-	**Reserved**
5-0	R	000000b	**Receiver FIFO Byte Count (RXFBC)** Return the number of bytes left in Receiver FIFO.

9.10.6.8 CIR Baud Rate Divisor Low Byte Register (BDLR)

The BDLR, an 8-bit **read/write** register, is to program the CIR Baud Rate clock.

Address: Base Address + 5h (when BR = 1)

Bit	R/W	Default	Description
7-0	R/W	00h	**Baud Rate Divisor Low Byte (BDLR[7:0])** These bits, for dividing the Baud Rate clock, are the low byte of the register.

CONFIDENTIAL

9.10.6.9 CIR Baud Rate Divisor High Byte Register (BDHR)

The BDHR, an 8-bit **read/write** register, is used to program the CIR Baud Rate clock.

Address: Base Address + 6h (when BR = 1)

Bit	R/W	Default	Description
7-0	R/W	00h	**Baud Rate Divisor High Byte (BDHR[7:0])** These bits, for dividing the Baud Rate clock, are the high byte of the register.

Baud rate divisor = 115200 / baud rate
Ex1: 2400 bps → 115200 /2400 = 48 → 48(d) = 0030(h) → BDHR = 00h, BDLR = 30h
Ex2: bit width = 0.565 ms (1770 bps (115200 / 1770 = 65(d) = 0041(h) (BDHR = 00(h), BDLR = 41(h)

9.10.6.10 CIR Interrupt Identification Register (IIR)

The IIR, an 8-bit register, is to identify the pending interrupt.

Address: Base address + 7h

Bit	R/W	Default	Description
7-3	-	-	**Reserved**
2-1	R	00b	**Interrupt Identification** These two bits are to identify the source of the pending interrupt. **IIR[1:0] Interrupt Source** 00 No interrupt 01 Transmitter Low Data Level Interrupt 10 Receiver Data Stored Interrupt 11 Receiver FIFO Overrun Interrupt
0	R	1b	**Interrupt Pending** This bit will be set to “1” while an interrupt is pending.

CONFIDENTIAL

This page is intentionally left blank.

CONFIDENTIAL

10. DC Electrical Characteristics

Operating Conditions

3VSB/SYS_3VSB/AVCC3 .....3.3V ± 0.15V
VBAT..... 2.3V to 3.6V
Operation Temperature (Topt)..... 0°C to +70°C

Absolute Maximum Ratings*

Applied Voltage..... -0.3V to 3.6V
Input Voltage (Vi) ..... -0.3V to VCC3 + 0.3V
Output Voltage (Vo) ..... -0.3V to VCC3 + 0.3V
Operation Temperature (Topt)..... 0°C to +70°C
Storage Temperature..... -55°C to +125°C

***Comments**

Stresses above those listed under "Absolute Maximum Ratings" may cause permanent damage to this device. These are stress ratings only. Functional operation of this device at these or any other conditions above those indicated in the operational sections of this specification is not implied or intended. Exposure to the absolute maximum rating conditions for extended periods may affect device reliability.

DC Electrical Characteristics(VCC3=3.3V±5%, Ta=0°C~70°C)

Symbol	Parameter	Condition	Min.	Typ.	Max.	Unit
DO8 Buffer						
V_{OL}	Low Output Voltage	I_{OL} = 8 mA			0.4	V
V_{OH}	High Output Voltage	I_{OH} = -8 mA	2.4			V
DOD8 Buffer						
V_{OL}	Low Output Voltage	I_{OL} = 8 mA			0.4	V
DIO8 Type Buffer						
V_{OL}	Low Output Voltage	I_{OL} = 8 mA			0.4	V
V_{OH}	High Output Voltage	I_{OH} = -8 mA	2.4			V
V_{IL}	Low Input Voltage				0.8	V
V_{IH}	High Input Voltage		2.2			V
I_{IL}	Low Input Leakage	V_{IN} = 0			10	μA
I_{IH}	High Input Leakage	V_{IN} = VCC3			-10	μA
I_{OZ}	3-state Leakage				20	μA
DIOD8 Type Buffer						
V_{OL}	Low Output Voltage	I_{OL} = 8 mA			0.4	V
V_{IL}	Low Input Voltage				0.8	V
V_{IH}	High Input Voltage		2.2			V
I_{IL}	Low Input Leakage	V_{IN} = 0			10	μA
I_{IH}	High Input Leakage	V_{IN} = VCC3			-10	μA
I_{OZ}	3-state Leakage				20	μA

CONFIDENTIAL

DC Electrical Characteristics

Symbol	Parameter	Condition	Min.	Typ.	Max.	Unit
DIO16 Type Buffer						
V_{OL}	Low Output Voltage	I_{OL} = 16 mA			0.4	V
V_{OH}	High Output Voltage	I_{OH} = -16 mA	2.4			V
V_{IL}	Low Input Voltage				0.8	V
V_{IH}	High Input Voltage		2.2			V
I_{IL}	Low Input Leakage	V_{IN} = 0			10	μA
I_{IH}	High Input Leakage	V_{IN} = VCC3			-10	μA
I_{OZ}	3-state Leakage				20	μA
DIOD16 Type Buffer						
V_{OL}	Low Output Voltage	I_{OL} = 16 mA			0.4	V
V_{IL}	Low Input Voltage				0.8	V
V_{IH}	High Input Voltage		2.2			V
I_{IL}	Low Input Leakage	V_{IN} = 0			10	μA
I_{IH}	High Input Leakage	V_{IN} = VCC3			-10	μA
I_{OZ}	3-state Leakage				20	μA
DO24L Buffer						
V_{OL}	Low Output Voltage	I_{OL} = 24 mA			0.4	V
V_{OH}	High Output Voltage	I_{OH} = -8 mA	2.4			V
DIO24 Type Buffer						
V_{OL}	Low Output Voltage	I_{OL} = 24 mA			0.4	V
V_{OH}	High Output Voltage	I_{OH} = -16 mA	2.4			V
V_{IL}	Low Input Voltage				0.8	V
V_{IH}	High Input Voltage		2.2			V
I_{IL}	Low Input Leakage	V_{IN} = 0			10	μA
I_{IH}	High Input Leakage	V_{IN} = VCC3			-10	μA
I_{OZ}	3-state Leakage				20	μA

CONFIDENTIAL

DI Type Buffer						
V_{IL}	Low Input Voltage				0.8	V
V_{IH}	High Input Voltage		2.2			V
V_{IH}	High Input Voltage(clock)		2.2			V
I_{IL}	Low Input Leakage	V_{IN} = 0				μA
I_{IH}	High Input Leakage	V_{IN} = VCC3				μA
DI-LType Buffer						
V_{IL}	Low Input Voltage				0.4	V
V_{IH}	High Input Voltage		1.35			V
I_{IL}	Low Input Leakage	V_{IN} = 0				μA
I_{IH}	High Input Leakage	V_{IN} = VCC3				μA
AI Type Buffer for AMD CPU Power Sequence Function						
V_{trig}	Trigger point for VCORE(0.8V)	VREF=2.8V	-	-	-	V
V_{hyst}	Hysteresis for VCORE(0.8V)		-	100	-	mV
V_{trig}	Trigger point for VDIMM_STR(1.2V)	VREF=2.8V	-	0.96V	-	V
V_{hyst}	Hysteresis for VDIMM_STR(1.2V)		-	100	-	mV
V_{trig}	Trigger point for VLDT_12	VREF=2.8V	-	1.0	-	V
V_{hyst}	Hysteresis for VLDT_12		-	100	-	mV

CONFIDENTIAL

This page is intentionally left blank.

CONFIDENTIAL

11. AC Characteristics

11.1 Clock Input Timings

Symbol	Parameter	Min.	Typ.	Max.	Unit
t_1	Clock High Pulse Width when CLKIN=48 MHz[1]	8			nsec
t_2	Clock Low Pulse Width when CLKIN=48 MHz[1]	8			nsec
t_3	Clock Period when CLKIN=48 MHz[1]	20	21	22	nsec
t_4	Clock High Pulse Width when CLKIN=24 MHz[1]	18			nsec
t_5	Clock Low Pulse Width when CLKIN=24 MHz[1]	18			nsec
t_6	Clock Period when CLKIN=24 MHz[1]	40			nsec

Not tested. Guaranteed by design.

Figure 11-1. Clock Input Timings

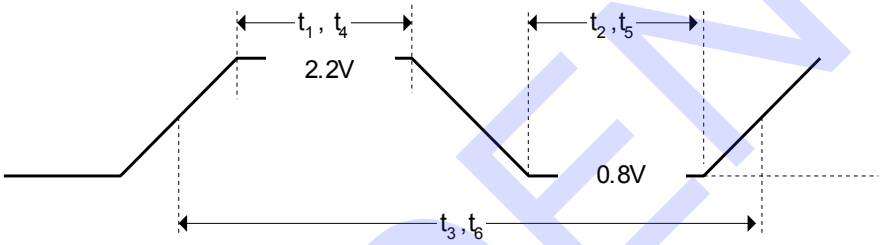

CONFIDENTIAL

11.2 LCLK (PCICLK) and LRESET Timings

Symbol	Parameter	Min.	Typ.	Max.	Unit
t_1	LCLK Cycle Time	28			nsec
t_2	LCLK High Time	11			nsec
t_3	LCLK Low Time	11			nsec
t_4	LRESET# Low Pulse Width	1.5			µsec

Figure 11-2. LCLK (PCICLK) and LRESET Timings

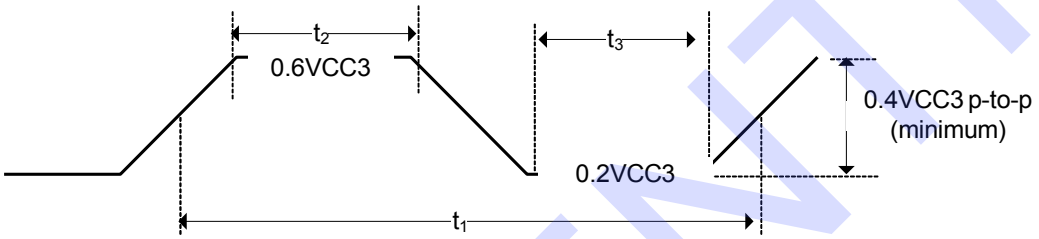

CONFIDENTIAL

11.3 LPC and SERIRQ Timings

Symbol	Parameter	Min.	Typ.	Max.	Unit
t_1	Float to Active Delay	3			nsec
t_2	Output Valid Delay			13	nsec
t_3	Active to Float Delay			20	nsec
t_4	Input Setup Time	9			nsec
t_5	Input Hold Time	3			nsec

Figure 11-3. LPC and SERIRQ Timings

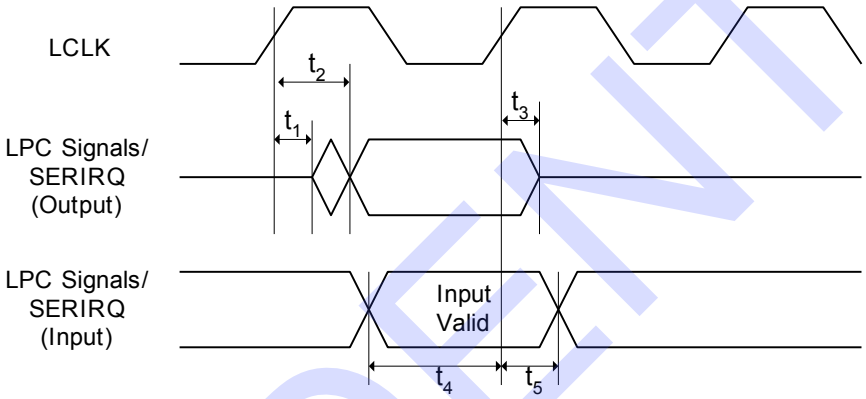

CONFIDENTIAL

11.4 Modem Control Timings

Symbol	Parameter	Min.	Typ.	Max.	Unit
t_1	Float to active delay			40	nsec

Figure 11-4. Modem Control Timings

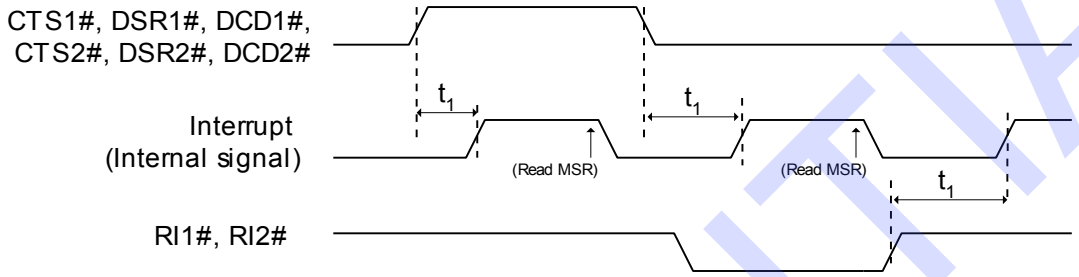

CONFIDENTIAL

11.5 Keyboard/Mouse Receive/Send Data Timings

Symbol	Parameter	Min.	Typ.	Max.	Unit
t_1	Time form DATA transition to falling edge of CLK (Receive)	5		25	μsec
t_2	Time form rising edge of CLK to DATA transition (Receive)	5		T4-5	μsec
t_3	Duration of CLK inactive (Receive/Send)	30		50	μsec
t_4	Duration of CLK active (Receive/Send)	30		50	μsec
t_5	Time to keyboard inhibit after clock 11 to ensure the keyboard device does not start another transmission (Receive)	>0	50		μsec
t_6	Time from inactive to active CLOCK transition, used to time when the auxiliary device samples DATA (Send)	5		25	μsec

Note: (1) The system can hold the 'clock' signal inactive to inhibit the next transmission.
(2) The system raises the 'clock' line to allow the next transmission.

Figure 11-5. Keyboard/Mouse Receive/Send Data Timings

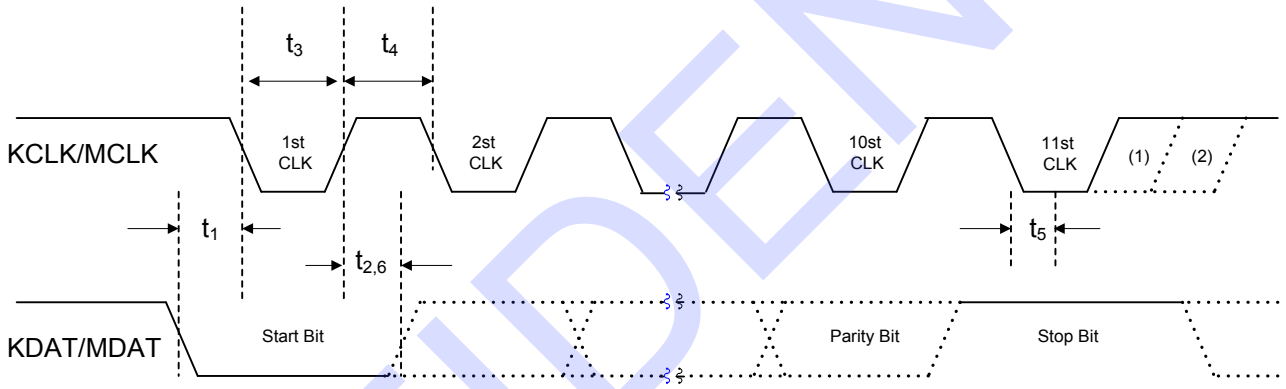

CONFIDENTIAL

11.6 RSMRST# and ACPI Power Control Signal Timings

Symbol	Parameter	Typ.	Unit
t_1	RSMRST# de-actives delay from SYS_3VSB=3V	85	msec
$t_{2*Note1}$	PWRGD3 active delay from 0.8 * AVCC3	Reference: Section 11.7	msec
t_3	Overlap of PSON# and 3VSBSW#	10	msec
t_4	Delay time of 3VSBSW# falling edge to PWRGD3 falling edge	<1	msec

Figure 11-6. RSMRST# Timings

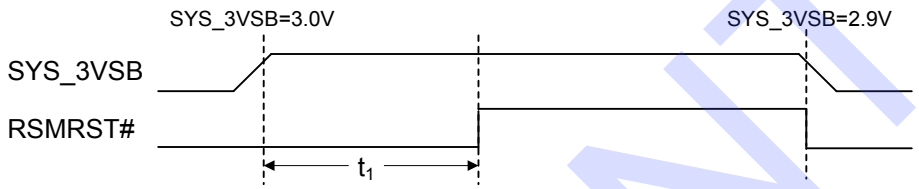

Figure 11-7. DPWROK Timings

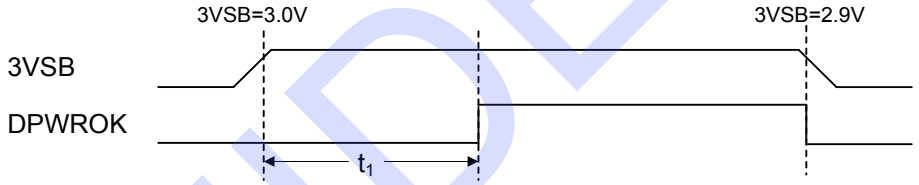

Figure 11-8. ACPI Power Signal Timings

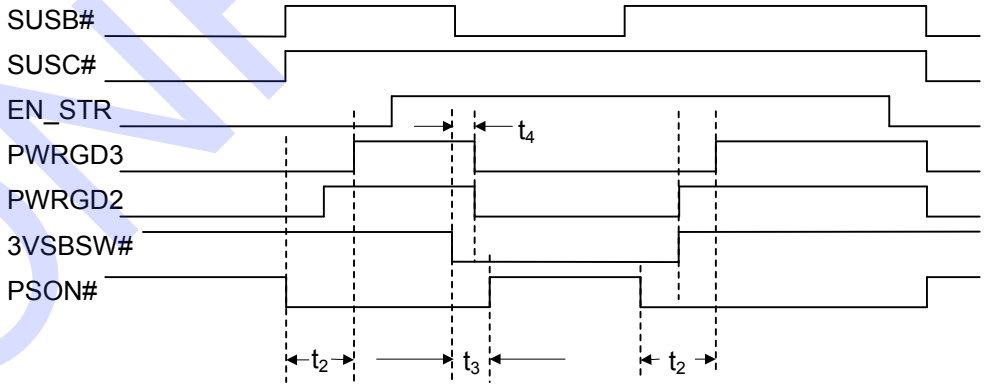

CONFIDENTIAL

11.7 PWRGD1, PWRGD2, PWRGD3 Signal Timings

Symbol	Parameter	Min.	Typ.	Max.
t_6	Delay time of (3V/5V/12V reach 80% detected AND SUSB#) to internal_GD.		<1ms	
t_7	Delay time of internal_GD to PWRGD1 rising edge	26ms	34ms	43ms
t_8	Delay time of internal_GD to PWRGD2 rising edge	43ms	57ms	71ms
t_9	Delay time of internal_GD to PWRGD3 rising edge	125ms	166ms	208ms
t_{10}	Delay time of SUSB# falling edge to PWRGD falling edge		< 1ms.	

*Note: IT8613E doesn't support PWRGD1, VIN3 and RSTCONIN.

Figure 11-9. PWRGD1/2/3 Signal Condition

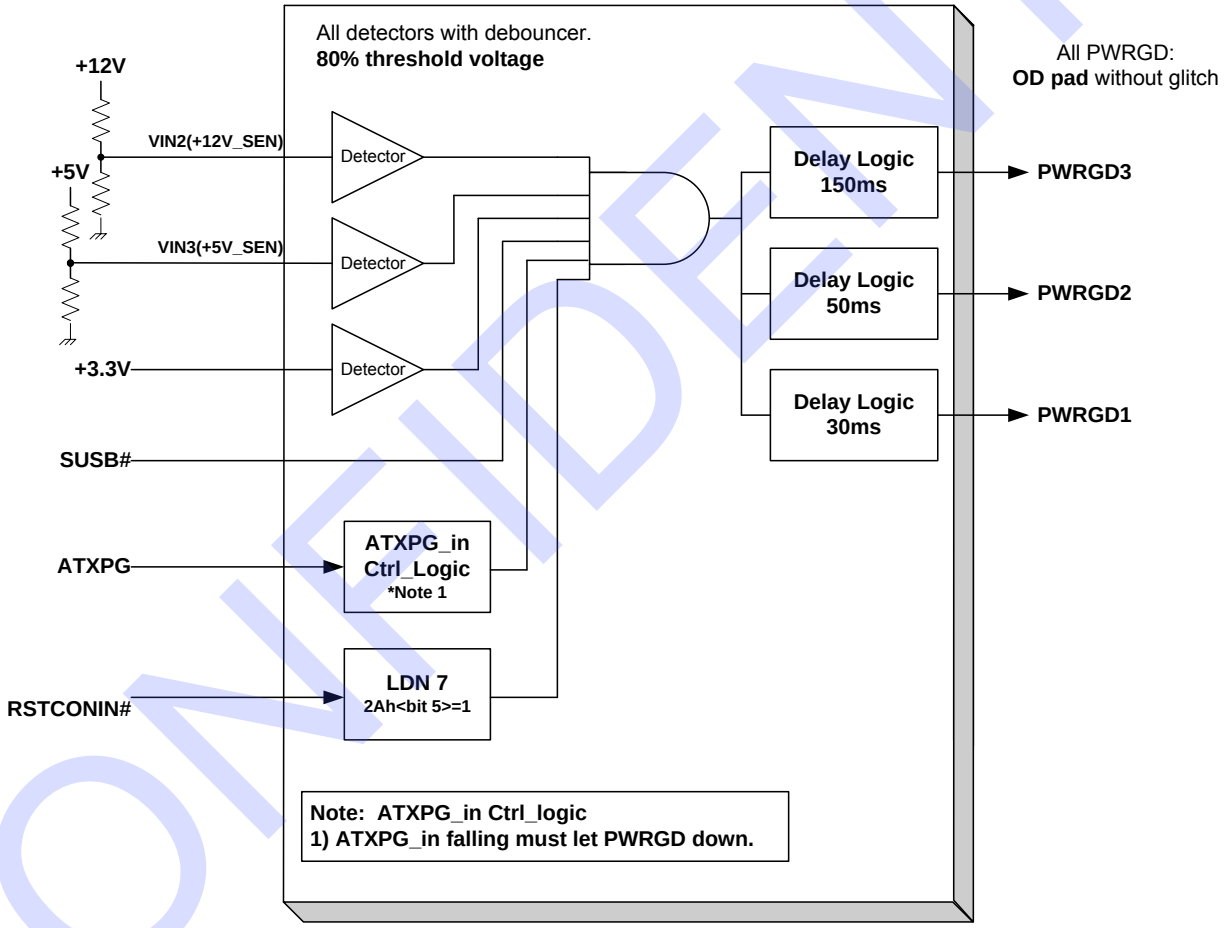

CONFIDENTIAL

Figure 11-10. PWRGD1/2/3 Signal Timings

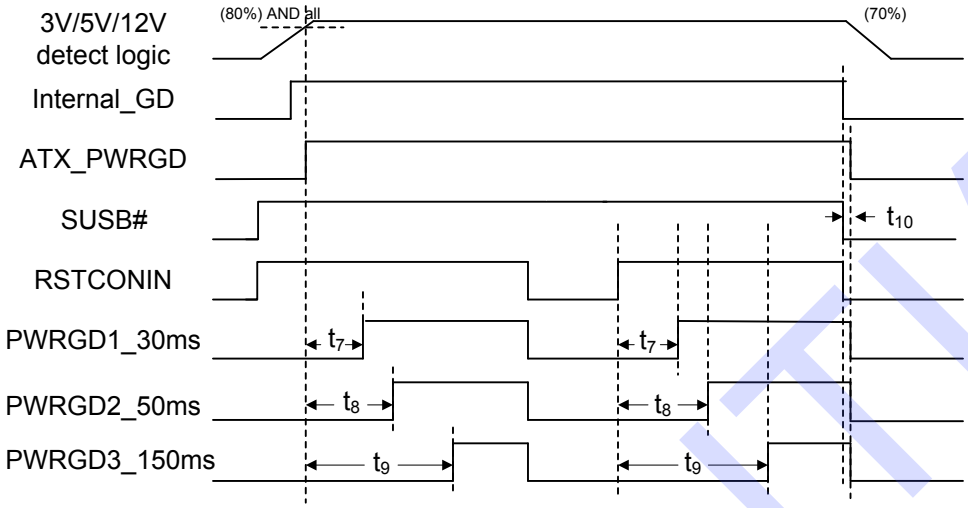

CONFIDENTIAL

11.8 PCIRST#1, PCIRST#2 and PCIRST#3 Signal Timings

Note: IT8613E doesn't support PCIRST2#, PCIRSTIN# and RSTCONIN/OUT signals.

Figure 11-11. PCIRST#1, PCIRST#2 and PCIRST#3 Signal Timings

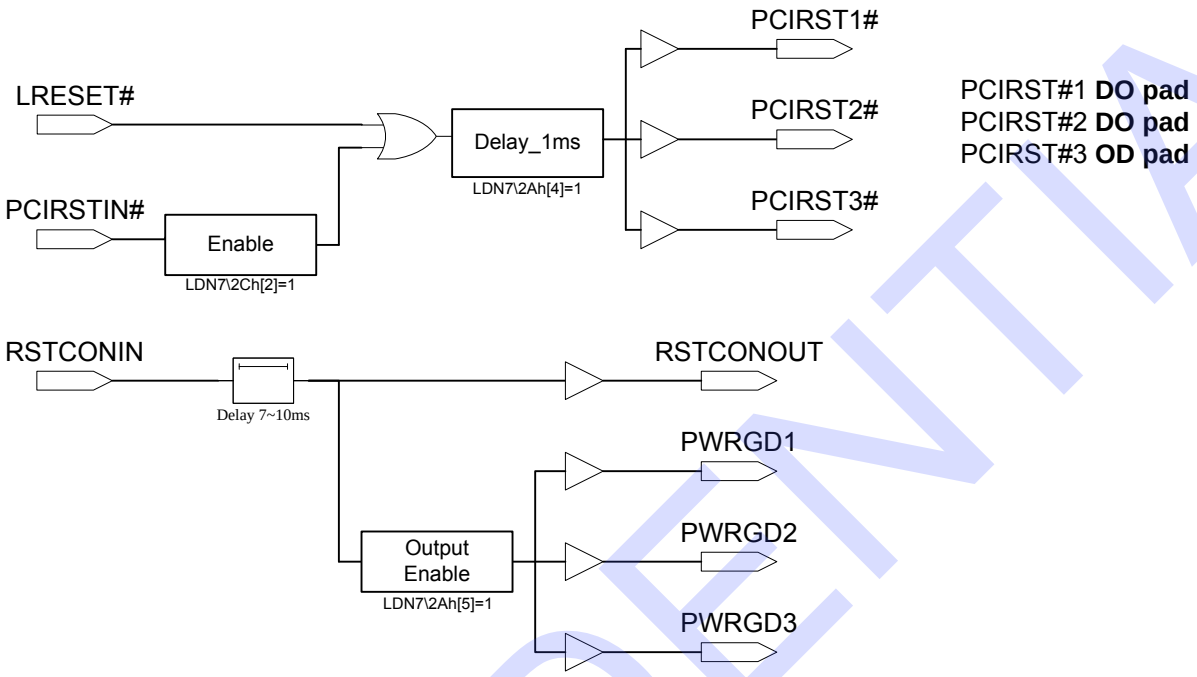

CONFIDENTIAL

11.9 Energy-using Product (EuP) Power Control Signal Timings

Symbol	Parameter	Min.	Typ.	Max.
t_{11}	Delay time of RSMRST# rising to first PWRON# pulse.	-	200ms	-
t_{12}	Delay time of AVCC3 falling edge to 5VSB_CTRL# rising edge.	-	5.2s	-

Figure 11-12. EuP Function Signal Timings

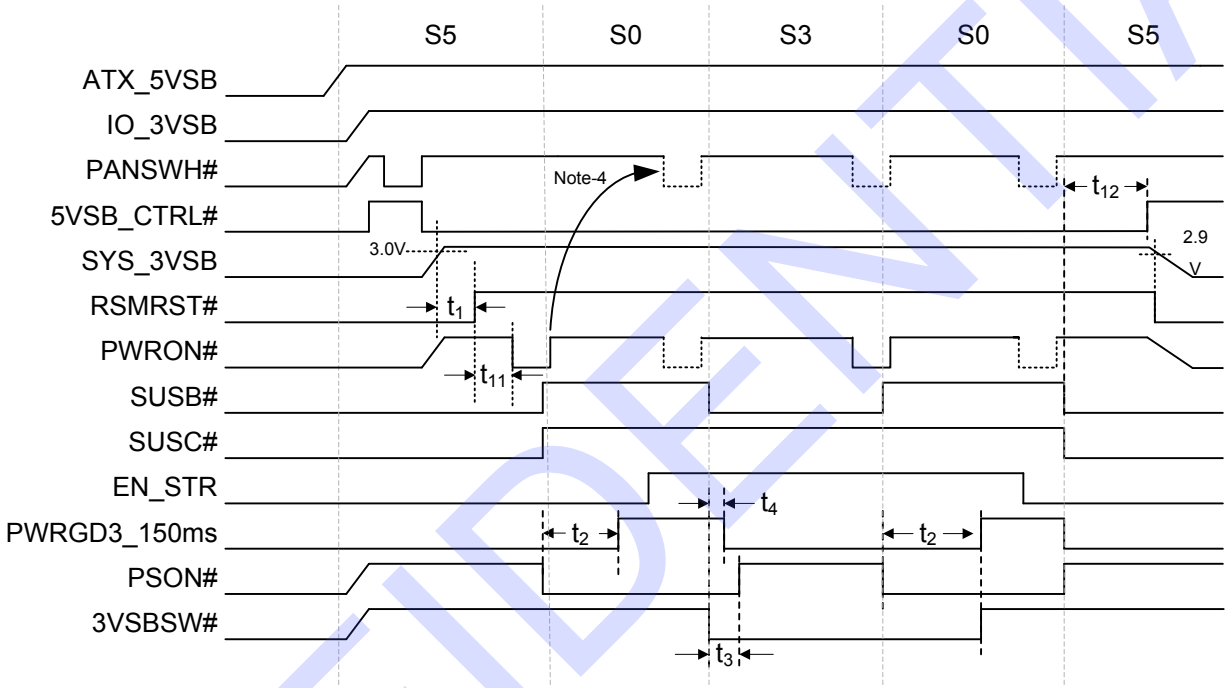

CONFIDENTIAL

11.10 AMD K8 Power Sequence

Figure 11-13. AMD K8 Power Sequence Timings

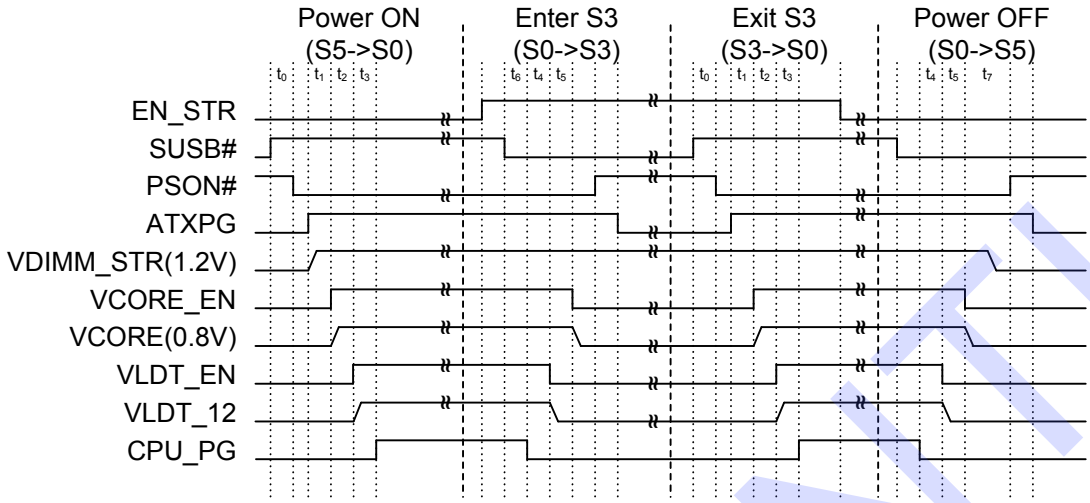

Table 11-1. Power Sequence AC Timing Parameter

Symbol	Typ.	Description
t_0	1.5ms	The rising edge of SUSB# to the assertion of PSON#.
t_1	2ms + t_vdimm_gd	Both ATXPG & VDIMM_STR(1.2V) ready to the rising edge of VCORE_EN. The t_vdimm_gd is the rise time of the VDIMM_STR(1.2V) voltage from 0V to 1.08V.
t_2	50us + t_vcore_gd	The rising edge of VCORE_EN to the rising edge of VLDT_EN. The t_vcore_gd is the rise time of the VCORE(0.8V) voltage from 0V to 0.45V(typical).
t_3	2ms + t_vldt_gd	The rising edge of VLDT_EN to the rising of CPU_PG. The t_vldt_gd is the rise time of the VLDT voltage from 0V to 1.0V.
t_4	50us	The de-assertion of CPU_PG to the de-assertion of VLDT_EN.
t_5	10ms	The de-assertion of VLDT_EN to the de-assertion of VCORE_EN.
t_6	1.5ms	The falling edge of SUSB# to the de-assertion of CPU_PG.
t_7	210ms	The falling edge of VCORE(0.8V) to the rising edge of PSON#

CONFIDENTIAL

11.11 DSW Timings

Figure 11-14. DPWORK Timings

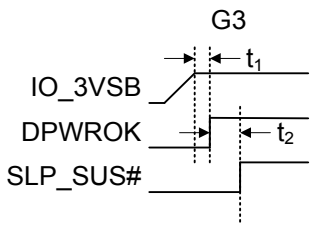

Figure 11-15. DSW Timings

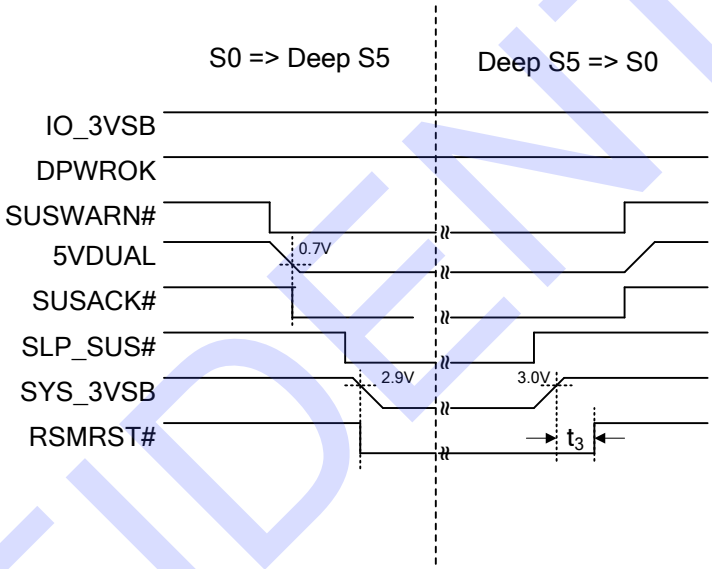

Table 11-2. DSW Timings Parameter

Symbol	Typ.	Description
t_1	85ms	The rising edge of IO_3VSB to rising edge of DPWORK
t_2	by SB	The rising edge of IO_3VSB to rising edge of SLP_SUS#
t_3	75ms	SYS_3VSB voltage over 3.0V to the rising edge of RSMRST#

CONFIDENTIAL

12. Package Information

LQFP 64L Outline Dimensions unit: inches/mm

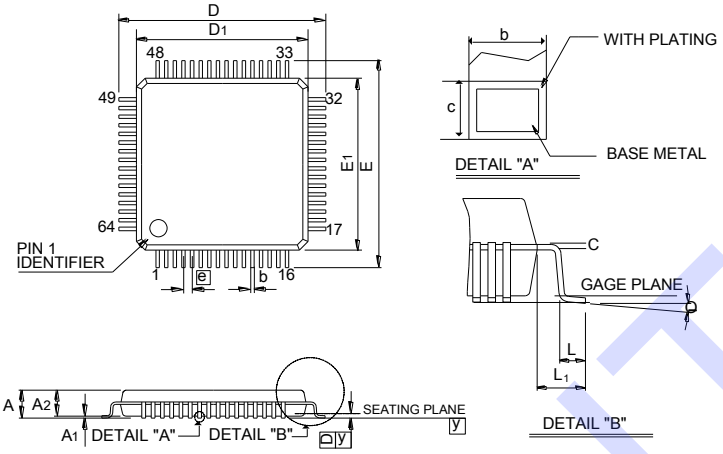

Symbol	Dimensions in inches			Dimensions in mm		
	Min.	Nom.	Max.	Min.	Nom.	Max.
A	-	-	0.063	-	-	1.60
A_1	0.002	-	0.006	0.05	-	0.15
A_2	0.053	0.055	0.057	1.35	1.40	1.45
b	0.005	0.007	0.009	0.13	0.18	0.23
c	0.004	-	0.008	0.09	-	0.20
D	0.354 BSC			9.00 BSC		
D_1	0.276 BSC			7.00 BSC		
E	0.354 BSC			9.00 BSC		
E_1	0.276 BSC			7.00 BSC		
e	0.016 BSC			0.40 BSC		
L	0.018	0.024	0.030	0.45	0.60	0.75
L_1	0.039 REF			1.00 REF		
y	-	-	0.004	-	-	0.10
θ	0°	3.5^o	7°	0°	3.5^o	7°

Notes:

1. Dimensions D_1 and E_1 do not include mold protrusion. But mold mismatch is included.
2. Dimensions b does not include dambar protrusion.
3. Controlling dimension: millimeter
4. Reference Document : JEDEC MS-026

DI-LQFP64(7.0*7.0)v0

CONFIDENTIAL

This page is intentionally left blank.

CONFIDENTIAL

13. Ordering Information

Part No.	Package
IT8613E/EX	64-LQFP

All green components provided are in compliance with RoHS, and Halogen-Free.

CONFIDENTIAL

This page is intentionally left blank.

CONFIDENTIAL

14. Top Marking Information

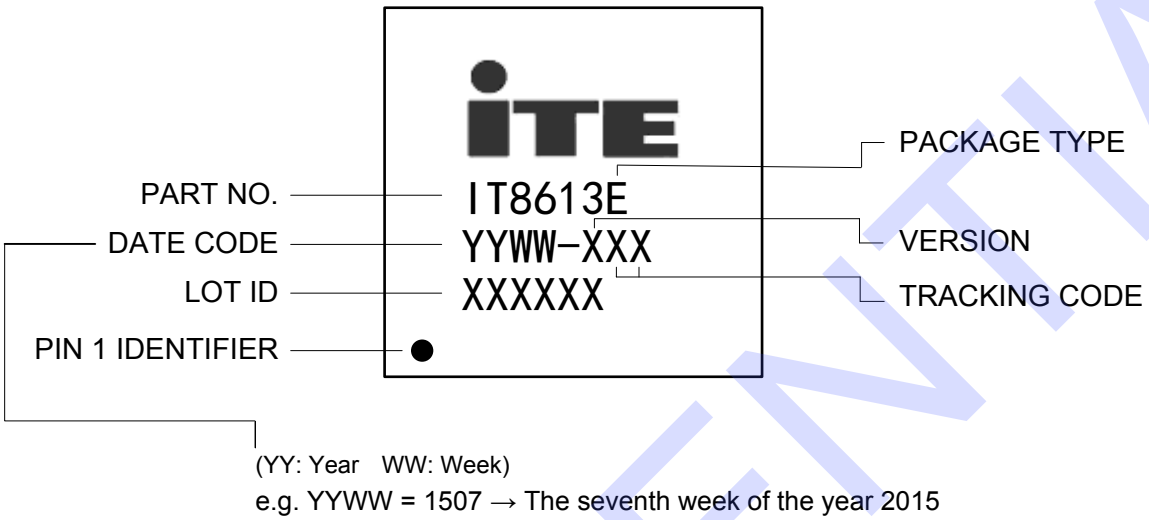

CONFIDENTIAL

ITE TECH. INC. TERMS AND CONDITIONS OF SALE (Rev: 2013)

0. PARTIES

ITE Tech. Inc. ("Seller") is a company headquartered in Taiwan, Republic of China, and incorporated under laws of Republic of China, Buyer is a company or an entity, purchasing product from ITE Tech. Inc.

1. ACCEPTANCE OF TERMS

BUYER ACCEPTS THESE TERMS (i) BY WRITTEN ACCEPTANCE (BY PURCHASE ORDER OR OTHERWISE), OR (ii) BY FAILURE TO RETURN GOODS DESCRIBED ON THE FACE OF THE PACKING LIST WITHIN FIVE DAYS OF THEIR DELIVERY.

2. DELIVERY

(a) Otherwise specified in the order agreed by Seller, delivery will be made Free Carrier (Incoterms), Seller's warehouse, Science-Based Industrial Park, Hsinchu, Taiwan.
(b) Title to the goods and the entire risk will pass to Buyer upon delivery to carrier.
(c) Shipments are subject to availability. Seller shall make every reasonable effort to meet the date(s) quoted or acknowledged; and if Seller makes such effort, Seller will not be liable for any delays.

3. TERMS OF PAYMENT

(a) Terms are as stated on Seller's quotation, or if none are stated, net thirty (30) days. Accounts past due will incur a monthly charge at the rate of one percent (1%) per month (or, if less, the maximum allowed by applicable law) to cover servicing costs.
(b) Seller reserves the right to change credit terms at any time in its sole discretion.

4. LIMITED WARRANTY

(a) Seller warrants that the goods sold will be free from defects in material and workmanship and comply with Seller's applicable published specifications for a period of ninety (90) days from the date of Seller's delivery. Within the warranty period and by obtaining a return number from Seller, Buyer may request replacement or repair for defective goods.
(b) Goods or parts which have been subject to abuse (including without limitation repeated or extended exposure to conditions at or near the limits of applicable absolute ratings) misuse, accident, alteration, neglect, or unauthorized repair or improper application are not covered by any warranty. No warranty is made with respect to custom products or goods produced to Buyer's specifications (unless specifically stated in a writing signed by Seller).
(c) No warranty is made with respect to goods used in devices intended for use in applications where failure to perform when properly used can reasonably be expected to result in significant injury (including, without limitation, navigation, aviation or nuclear equipment, or for surgical implant or to support or sustain life) and Buyer agrees to indemnify, defend, and hold harmless Seller from all claims, damages and liabilities arising out of any such uses.
(d) This Paragraph 4 is the only warranty by Seller with respect to goods and may not be modified or amended except in writing signed by an authorized officer of Seller.
(e) Buyer acknowledges and agrees that it is not relying on any applications, diagrams or circuits contained in any literature, and by its conditions Buyer will test all parts and applications under extended field and laboratory conditions. Notwithstanding any cross-reference or any statements of compatibility, functionality, interchangeability, and the like, the goods may differ from similar goods from other vendors in performance, function or operation, and in areas not contained in the written specifications, or as to ranges and conditions outside such specifications; and Buyer agrees that there are no warranties and that Seller is not responsible for such things.
(f) EXCEPT AS PROVIDED ABOVE, SELLER MAKES NO WARRANTIES OR CONDITIONS, EXPRESS, IMPLIED, OR STATUTORY; AND SELLER EXPRESSLY EXCLUDES AND DISCLAIMS ANY WARRANTY OR CONDITION OF MERCHANTABILITY OR FITNESS FOR PARTICULAR PURPOSE OR APPLICATION.

5. LIMITATION OF LIABILITY

(a) Seller will not be liable for any loss, damage or penalty resulting from causes beyond its reasonable control, including but not limited to delay by others, force majeure, acts of God, or labor conditions. In any such event, the date(s) for Seller's performance will be deemed extended for a period equal to any delay resulting.
(b) THE LIABILITY OF SELLER ARISING OUT OF THE CONTRACT OR ANY GOODS SOLD WILL BE LIMITED TO REFUND OF THE PURCHASE PRICE OR REPLACEMENT OF PURCHASED GOODS (RETURNED TO SELLER FREIGHT PRE-PAID) OR, WITH SELLER'S PRIOR WRITTEN CONSENT, REPAIR OF PURCHASED GOODS.
(c) Buyer will not return any goods without first obtaining a customer return order number.
(d) AS A SEPARATE LIMITATION, IN NO EVENT WILL SELLER BE LIABLE FOR COSTS OF SUBSTITUTE GOODS; FOR ANY SPECIAL, CONSEQUENTIAL, INCIDENTAL OR INDIRECT DAMAGES; OR LOSS OF USE, OPPORTUNITY, MARKET POTENTIAL, AND/OR PROFIT ON ANY THEORY (CONTRACT, TORT, FROM THIRD PARTY CLAIMS OR OTHERWISE). THESE LIMITATIONS SHALL APPLY NOTWITHSTANDING ANY FAILURE OF ESSENTIAL PURPOSE OF ANY REMEDY.

(e) No action against Seller, whether for breach, indemnification, contribution or otherwise, shall be commenced more than one year after the cause of action has accrued, or more than one year after either the Buyer, user or other person knew or with reasonable diligence should have known of the matter or of any claim of dissatisfaction or defect involved; and no such claim may be brought unless Seller has first been given commercially reasonable notice, a full written explanation of all pertinent details, and a good faith opportunity to resolve the matter.
(f) BUYER EXPRESSLY AGREES TO THE LIMITATIONS OF THIS PARAGRAPH 5 AND TO THEIR REASONABLENESS.

6. SUBSTITUTIONS AND MODIFICATIONS

Seller may at any time make substitutions for product ordered which do not materially and adversely affect overall performance with the then current specifications in the typical and intended use. Seller reserves the right to halt deliveries and shipments and alter specifications and prices without notice. Buyer shall verify that the literature and information is current before purchasing.

7. CANCELLATION

The purchase contract may not be canceled by Buyer except with written consent by Seller and Buyer's payment of reasonable cancellation charges (including but not be limited to expenses already incurred for labor and material, overhead, commitments made by Seller, and a reasonable profit).

8. INDEMNIFICATION

Seller will, at its own expense, assist Buyer with technical support and information in connection with any claim that any parts as shipped by Seller under the purchase order infringe any valid and enforceable copyright, or trademark, provided however, that Buyer (i) gives immediate written notice to Seller, (ii) permits Seller to participate and to defend if Seller requests to do so, and (iii) gives Seller all needed information, assistance and authority. However, Seller will not be responsible for infringements resulting from anything not entirely manufactured by Seller, or from any combination with products, equipment, or materials not furnished by Seller. Seller will have no liability with respect to intellectual property matters arising out of products made to Buyer's specifications, code, or designs.

Except as expressly stated in this Paragraph 8 or in another writing signed by an authorized officer, Seller makes no representations and/or warranties with respect to intellectual and/or industrial property and/or with respect to claims of infringement. Except as to claims Seller agrees in writing to defend, BUYER WILL INDEMNIFY, DEFEND AND HOLD HARMLESS SELLER FROM ALL CLAIMS, COSTS, LOSSES, AND DAMAGES (INCLUDING ATTORNEYS FEES) AGAINST AND/OR ARISING OUT OF GOODS SOLD AND/OR SHIPPED HEREUNDER.

9. NO CONFIDENTIAL INFORMATION

Seller shall have no obligation to hold any information in confidence except as provided in a separate non-disclosure agreement signed by both parties.

10. ENTIRE AGREEMENT

(a) These terms and conditions are the entire agreement and the only representations and understandings between Seller and Buyer, and no addition, deletion or modification shall be binding on Seller unless expressly agreed to in written and signed by an officer of Seller.
(b) Buyer is not relying upon any warranty or representation except for those specifically stated here.

11. APPLICABLE LAW

The contract and all performance and disputes arising out of or relating to goods involved will be governed by the laws of R.O.C. (Taiwan, Republic of China), without reference to the U.N. Convention on Contracts for the International Sale of Goods or to conflict of laws principles. Buyer agrees at its sole expense to comply with all applicable laws in connection with the purchase, use or sale of the goods provided hereunder and to indemnify Seller from any failure by Buyer to so comply. Without limiting the foregoing, Buyer certifies that no technical data or direct products thereof will be made available or re-exported, directly or indirectly, to any country to which such export or access is prohibited or restricted under R.O.C. laws or U.S. laws or regulations, unless prior authorization is obtained from the appropriate officials and agencies of the government as required under R.O.C. or U.S. laws or regulations.

12. JURISDICTION AND VENUE

The courts located in Hsinchu, Taiwan, Republic of China, will have the sole and exclusive jurisdiction and venue over any dispute arising out of or relating to the contract or any sale of goods hereunder. Buyer hereby consents to the jurisdiction of such courts.

13. ATTORNEYS' FEES

Reasonable attorneys' fees and costs will be awarded to the prevailing party in the event of litigation involving and/or relating to the enforcement or interpretation of the contract and/or any goods sold under it.

CONFIDENTIAL