ITE 聯陽半導體 ITE Tech. Inc.

IT8625E

Environment Control – Low Pin Count Input / Output (EC - LPC I/O)

Preliminary Specification V0.9.2.1

(For L Version)

ITE TECH. INC.

CONFIDENTIAL

This specification is subject to Change without notice. It is provided "AS IS" and for reference only. For purchasing information, please contact the nearest ITE TECH sales representatives.
Please note that the IT8625E V0.9.2.1 is applicable only to the L version.

CONFIDENTIAL

Copyright ©2019 ITE Tech. Inc.

This is a Preliminary document release. All specifications are subject to change without notice.
The material contained in this document supersedes all previous material issued for the products herein referenced. Please contact ITE Tech. Inc. for the latest document(s).

All sales are subject to ITE's Standard Terms and Conditions, a copy of which is included in the back of this document.

ITE, IT8625E is a trademark of ITE Tech. Inc.
All other trademarks are claimed by their respective owners.
All specifications are subject to change without notice.

Additional copies of this manual or other ITE literature may be obtained from:

ITE Tech. Inc.
Marketing Department
9F, No. 233-2, Baoqiao Rd., Xindian Dist,
New Taipei City, 23145, Taiwan, R.O.C.

Phone: (02) 29126889
Fax: (02) 2910-2551, 2910-2552

If you have any marketing or sales questions, please contact:
P.Y. Chang, at ITE Taiwan:
E-mail: p.y.chang@ite.com.tw, Tel: 886-2-29126889 X6052,Fax: 886-2-29102551

You may also find the local sales representative nearest you on the ITE web site.

To find out more about ITE, visit our World Wide Web at:
http://www.ite.com.tw

Or e-mail **itesupport@ite.com.tw** for more product information/services

CONFIDENTIAL

CONFIDENTIAL

Revision History

The contents below indicate the change between this version and the previous version only. Therevision history shown in the previous version will not remain in the following table.

Section	Revision	Page No.
-	• Initial release for L version	-

CONFIDENTIAL

CONFIDENTIAL

CONTENTS

1. Features 1
2. General Description 3
3. Block Diagram 5
4. Pin Configuration 7
5. Pin Description 9
6. List of GPIO Pins 31
7. Power On Strapping Options and Special Pin Routings 39
8. Configuration 41
8.1 Configuring Sequence 41
8.2 Configuration Registers 43
8.2.1 Logical Device Base Address 49
8.3 Global Configuration Registers (LDN: All) 50
8.3.1 Configure Control (Index=02h) 50
8.3.2 Logical Device Number (LDN, Index=07h) 50
8.3.3 Chip ID Byte 1 (Index=20h, Default=86h) 50
8.3.4 Chip ID Byte 2 (Index=21h, Default=25h) 50
8.3.5 Chip Version (Index=22h, Default=0Ch) 50
8.3.6 Clock Selection Register (Index=23h, Default=40h) 50
8.3.7 Special Register (Index=24h, Default=00h) 51
8.3.8 GPIO Set 1 Multi-Function Pin Selection Register (Index=25h, Default=00h) 52
8.3.9 GPIO Set 2 Multi-Function Pin Selection Register (Index=26h, Default=F3h) 53
8.3.10 GPIO Set 3 Multi-Function Pin Selection Register (Index=27h, Default=00h) 54
8.3.11 GPIO Set 4 Multi-Function Pin Selection Register (Index=28h, Default=00h) 55
8.3.12 GPIO Set 5 Multi-Function Pin Selection Register (Index=29h, Default=01h) 56
8.3.13 Special Function Selection Register 1(Index=2Ah, Default=00h) 57
8.3.14 Special Function Selection Register 2 (Index=2Bh, Default=48h) 58
8.3.15 Special Function Selection Register 3 (Index=2Ch, Default=01h) 58
8.3.16 Special Function Selection Register 4 (Index=2Dh, Default=00h) 59
8.3.17 Test 1 Register (Index=2Eh, Default=00h) 59
8.3.18 Test 2 Register (Index=2Fh, Default=00h) 59
8.4 Serial Port 1 Configuration Registers (LDN=01h) 60
8.4.1 Serial Port 1 Activate (Index=30h, Default=00h) 60
8.4.2 Serial Port 1 Base Address MSB Register (Index=60h, Default=03h) 60
8.4.3 Serial Port 1 Base Address LSB Register (Index=61h, Default=F8h) 60
8.4.4 Serial Port 1 Interrupt Level Select (Index=70h, Default=04h) 60
8.4.5 Serial Port 1 Special Configuration Register 1 (Index=F0h, Default=00h) 60
8.5 Serial Port 2 Configuration Registers (LDN=02h) 61
8.5.1 Serial Port 2 Activate (Index=30h, Default=00h) 61
8.5.2 Serial Port 2 Base Address MSB Register (Index=60h, Default=02h) 61
8.5.3 Serial Port 2 Base Address LSB Register (Index=61h, Default=F8h) 61
8.5.4 Serial Port 2 Interrupt Level Select (Index=70h, Default=03h) 61
8.5.5 Serial Port 2 Special Configuration Register 1 (Index=F0h, Default=00h) 61
8.6 Parallel Port Configuration Registers (LDN=03h) 62
8.6.1 Parallel Port Activate (Index=30h, Default=00h) 62
8.6.2 Parallel Port Primary Base Address MSB Register (Index=60h, Default=03h) 62
8.6.3 Parallel Port Primary Base Address LSB Register (Index=61h, Default=78h) 62
8.6.4 Parallel Port Secondary Base Address MSB Register (Index=62h, Default=07h) 62
8.6.5 Parallel Port Secondary Base Address LSB Register (Index=63h, Default=78h) 62
8.6.6 Parallel Port Interrupt Level Select (Index =70h, Default=07h) 62
8.6.7 Parallel Port DMA Channel Select (Index=74h, Default=03h) 62

CONFIDENTIAL

8.6.8 Parallel Port Special Configuration Register (Index=F0h, Default=0Bh) 63
8.7 Environment Controller Configuration Registers (LDN=04h) 64
8.7.1 Environment Controller Activate (Index=30h, Default=00h) 64
8.7.2 Environment Controller Base Address MSB Register (Index=60h, Default=02h) 64
8.7.3 Environment Controller Base Address LSB Register (Index=61h, Default=90h) 64
8.7.4 PME Direct Access Base Address MSB Register (Index=62h, Default=02h) 64
8.7.5 PME Direct Access Base Address LSB Register (Index=63h, Default=30h) 64
8.7.6 Environment Controller Interrupt Level Select (Index=70h, Default=09h) 64
8.7.7 EC HWM MMIO Control Register (Index=74h, Default=00h) 65
8.7.8 APC/PME Event Enable Register (PER) (Index=F0h, Default=00h) 66
8.7.9 APC/PME Status Register (PSR) (Index=F1h, Default=00h) 66
8.7.10 APC/PME Control Register 1 (PCR 1) (Index=F2h, Default=00h) 67
8.7.11 Environment Controller Special Configuration Register (Index=F3h, Default=00h) 67
8.7.12 APC/PME Control Register 2 (PCR 2) (Index=F4h, Default=00h) 68
8.7.13 APC/PME Special Code Index Register (Index=F5h) 68
8.7.14 APC/PME Special Code Data Register (Index=F6h) 69
8.7.15 Under Voltage Protection/Over Voltage (UVP/OVP) Configure Register (Index=F9h, Default=48h) 69
8.7.16 Special Configuration Register 1 (Index=FAh, Default=00h) 70
8.7.17 Special Configuration Register 2 (Index=FBh, Default=00h) 71
8.7.18 UVP/OVP Range Selection Register 1(Index=FCh, Default=00h) 72
8.8 KBC(Keyboard) Configuration Registers (LDN=05h) 73
8.8.1 KBC(Keyboard) Activate (Index=30h, Default=01h) 73
8.8.2 KBC(Keyboard) Data Base Address MSB Register (Index=60h, Default=00h) 73
8.8.3 KBC(Keyboard) Data Base Address LSB Register (Index=61h, Default=60h) 73
8.8.4 KBC(Keyboard) Command Base Address MSB Register (Index=62h, Default=00h) 73
8.8.5 KBC(Keyboard) Command Base Address LSB Register (Index=63h, Default=64h) 73
8.8.6 KBC(Keyboard) Interrupt Level Select (Index=70h, Default=01h) 73
8.8.7 KBC(Keyboard) Interrupt Type (Index=71h, Default=02h) 73
8.8.8 KBC(Keyboard) Special Configuration Register (Index=F0h, Default=48h) 74
8.9 KBC(Mouse) Configuration Registers (LDN=06h) 75
8.9.1 KBC(Mouse) Activate (Index=30h, Default=00h) 75
8.9.2 KBC(Mouse) Interrupt Level Select (Index=70h, Default=0Ch) 75
8.9.3 KBC(Mouse) Interrupt Type (Index=71h, Default=02h) 75
8.9.4 KBC(Mouse) Special Configuration Register (Index=F0h, Default=00h) 75
8.10 GPIO Configuration Registers (LDN=07h) 76
8.10.1 SMI# Normal Run Access Base Address MSB Register (Index=60h, Default=00h) 76
8.10.2 SMI# Normal Run Access Base Address LSB Register (Index=61h, Default=00h) 76
8.10.3 Simple I/O Base Address MSB Register (Index=62h, Default=00h) 76
8.10.4 Simple I/O Base Address LSB Register (Index=63h, Default=00h) 76
8.10.5 Panel Button De-bounce Interrupt Level Select Register (Index=70h, Default=00h) 76
8.10.6 Watch Dog Timer Control Register (Index=71h, Default=00h) 76
8.10.7 Watch Dog Timer Configuration Register (Index=72h, Default=001s0000b) 77
8.10.8 Watch Dog Timer Time-out Value (LSB) Register (Index=73h, Default=38h) 77
8.10.9 Watch Dog Timer Time-out Value (MSB) Register (Index=74h, Default=00h) 77
8.10.10 GPIO Set 1-9 Registers (Index B0h~D4h) 78
8.10.11 Breath LED Control Register1 (Index=DAh,Default=B0h) 79
8.10.12 Breath LED Control Register2 (Index=DBh,Default=44h) 79
8.10.13 Panel Button De-bounce 0 Input Pin Mapping Register(Index=E0h,Default=00h) 80
8.10.14 Panel Button De-bounce 1 Input Pin Mapping Register (Index=E1h,Default=00h) 80
8.10.15 IRQ External Routing 1-0 Input Pin Mapping Registers (Index=E3h-E2h, Default=00h) 80
8.10.16 IRQ External Routing 1-0 Interrupt Level Selection Registers (Index=E4h, Default=00h) 80
8.10.17 APL Power Sequence Control Register (Index=E7h, Default=000s0000b) 81

CONFIDENTIAL

8.10.18 RSTCONIN/PANSHW# Mask Time Control Register(Index=ECh, Default=00h) 81
8.10.19 PANSWH# Test Mode Enable/Disable Register (Index=EFh, Default=00h) 82
8.10.20 SMI# Control Register 1 (Index=F0h, Default=00h) 82
8.10.21 SMI# Control Register 2 (Index=F1h, Default=00h) 82
8.10.22 SMI# Status Register 1 (Index=F2h, Default=00h) 82
8.10.23 SMI# Status Register 2 (Index=F3h, Default=00h) 83
8.10.24 SMI# Pin Mapping Register (Index=F4h, Default=00h) 83
8.10.25 Thermal Output Register (Index=F5h, Default=00h) 83
8.10.26 Hardware Monitor Alert Beep Pin Mapping Register (Index=F6h, Default=0Eh) 83
8.10.27 Keyboard Lock Pin Mapping Register (Index=F7h, Default=00h) 83
8.10.28 GP LED Blinking 1 Pin Mapping Register (Index=F8h, Default=00h) 84
8.10.29 GP LED Blinking 1 Control Register (Index=F9h, Default=00h) 84
8.10.30 GP LED Blinking 2 Pin Mapping Register (Index=FAh, Default=00h) 85
8.10.31 GP LED Blinking 2 Control Register (Index=FBh, Default=00h) 85
8.11 Consumer IR Configuration Registers (LDN=0Ah) 86
8.11.1 Consumer IR Activate (Index=30h, Default=00h) 86
8.11.2 Consumer IR Base Address MSB Register (Index=60h, Default=03h) 86
8.11.3 Consumer IR Base Address LSB Register (Index=61h, Default=10h) 86
8.11.4 Consumer IR Interrupt Level Select (Index=70h, Default=0Bh) 86
8.11.5 Consumer IR Special Configuration Register (Index=F0h, Default=06h) 86
9. Functional Description 89
9.1 Clock 89
9.2 LPC Interface 90
9.2.1 LPC Transactions 90
9.2.2 LDRQ# Encoding 90
9.3 The Enhanced Serial Peripheral Interface (eSPI) 91
9.3.1 Overview 91
9.3.2 Features 91
9.4 Serialized IRQ 94
9.4.1 Continuous Mode 94
9.4.2 Quiet Mode 94
9.4.3 Waveform Samples of SERIRQ Sequence 94
9.4.4 SERIRQ Sampling Slot 95
9.5 General Purpose I/O 96
9.6 Advanced Power Supply Control and Power Management Event (PME#) 98
9.7 Environment Controller 99
9.7.1 Interface 99
9.7.2 Registers 99
9.7.2.1 Address Port (Base+05h, Default=00h) 99
9.7.2.2 General Register Description 107
9.7.2.2.1 Configuration Register (Index=00h, Default=18h) 107
9.7.2.2.2 Interrupt Status Register 1 (Index=01h, Default=00h) 107
9.7.2.2.3 Interrupt Status Register 2 (Index=02h, Default=00h) 107
9.7.2.2.4 Interrupt Status Register 3 (Index=03h, Default=00h) 108
9.7.2.2.5 SMI# Mask Register 1 (Index=04h, Default=00h) 108
9.7.2.2.6 SMI# Mask Register 2 (Index=05h, Default=00h) 108
9.7.2.2.7 SMI# Mask Register 3 (Index=06h, Default=00h) 108
9.7.2.2.8 Interrupt Mask Register 1 (Index=07h, Default=00h) 108
9.7.2.2.9 Interrupt Mask Register 2 (Index=08h, Default=00h) 108
9.7.2.2.10 Interrupt Mask Register 3 (Index=09h, Default=C0h) 109
9.7.2.2.11 Interface Selection Register (Index=0Ah, Default=44h) 109
9.7.2.2.12 General Control Register 1 (Index=0Bh, Default=00h) 109
9.7.2.2.13 General Control Register 2 (Index=0Ch, Default=00h) 109

CONFIDENTIAL

9.7.2.2.14 Fan Controller Main Control Register (Index=13h, Default=00h)...110
9.7.2.2.15 ADC Temperature Channel Enable Register (Index=51h, Default=00h)...111
9.7.2.2.16 TMPIN3-1 Thermal Output Limit Registers (Index=54h-52h, Default=7Fh)...111
9.7.2.2.17 ADC Temperature Extra Channel Enable Register (Index=55h, Default=40h)...111
9.7.2.2.18 Beep Event Enable Register (Index=5Ch, Default=60h)...112
9.7.2.2.19 Beep Frequency Divisor of Fan Event Register (Index=5Dh, Default=00h)...112
9.7.2.2.20 Beep Frequency Divisor of Voltage Event Register (Index=5Eh, Default=00h)...112
9.7.2.2.21 Beep Frequency Divisor of Temperature Event Register (Index=5Fh, Default=00h)...112
9.7.2.2.22 Vendor ID Register (Index=58h, Default=90h)...112
9.7.2.2.23 Code ID Register (Index=5Bh, Default=12h)...112
9.7.2.3 FAN Controller Register Description...113
9.7.2.3.1 Fan Tachometer 1-6Reading Registers (Index=0Dh-0Fh, 18h-1Ah, 80h-83h, 93h-94h)...113
9.7.2.3.2 Fan Tachometer 1-6Limit Registers (Index=10h-12h, 1Bh-Dh, 84h-87h, B2h-B3h)...113
9.7.2.3.3 Fan Tachometer 1-6Enable Registers...113
9.7.2.3.4 FAN_CTL Control Register (Index=14h, Default=40h)...114
9.7.2.3.5 FAN_CTL1-6PWM Control Register (Index=15h,16h,17h, 1Eh,1Fh, 92h)...115
9.7.2.3.6 FAN_CTL6-1 SmartGuardian Automatic Mode Smoothing Control Registers...116
9.7.2.3.7 FAN_CTL6-1 SmartGuardian Automatic Mode Temperature Limit of OFF Registers(Index=A8h, A0h, 78h, 70h, 68h, 60h, Default=7Fh)116
9.7.2.3.8 FAN_CTL6-1 SmartGuardian Automatic Mode Temperature Limit of Fan Start Registers(Index= A9h, A1h, 79h, 71h, 69h, 61h, Default=7Fh)...116
9.7.2.3.9 FAN_CTL6-1 SmartGuardian Automatic Mode Temperature Limit of Full Speed Registers(Index= AAh, A2h, 7Ah, 72h, 6Ah, 62h, Default=7Fh)...117
9.7.2.3.10 FAN_CTL6-1 SmartGuardian Automatic Mode Start PWM Registers117
(Index= ABh, A3h, 7Bh, 73h, 6Bh, 63h, Default=00h/80h)...117
9.7.2.3.11 FAN_CTL6-1 SmartGuardian Automatic Mode Control Registers.118
(Index= ACh, A4h, 7Ch, 74h, 6Ch, 64h, Default=00h)...118
9.7.2.3.12 FAN_CTL6-1 SmartGuardian Automatic Mode △-Temperature Registers...118
(Index=ADh, A5h, 7Dh, 75h, 6Dh, 65h)...118
9.7.2.3.13 FAN_CTL6-1 Target Zone Registers (Index=AEh, A6h, 7Eh, 76h, 6Eh, 66h)...119
9.7.2.3.14 FAN_CTL6-1 PWM Duty Reading Registers (Index= AFh, A7h, 7Fh, 77h, 6Fh, 67h)...119
9.7.2.3.15 Extra Vector Registers...120
9.7.2.4 ADC Controller Register Description...122
9.7.2.4.1 VIN6-0Voltage Reading Registers (Index=26h-20h)...122
9.7.2.4.2 ADC Voltage Channel Enable Register (Index=50h, Default=00h)122
9.7.2.4.3 VIN High/Low Limit Registers (VINHLR), (Index=30h-3Fh, Default = 00h)...122
9.7.2.5 Temperature Register Description...123

CONFIDENTIAL

9.7.2.5.1 TMPIN1-6 Reading Registers (Index=29h-2Eh) 123
9.7.2.5.2 TMPIN1-6 High/Low Limit Registers (Index=40h-47h, B4h-B7h) .. 124
9.7.2.6 External Temperature Sensor Register Description 125
9.7.2.6.1 External Temperature Sensor Host Status Register (Index=88h, Default= -00h)..... 125
9.7.2.6.2 External Temperature Sensor Host Target Address Register (Index=89h, Default=00h) 125
9.7.2.6.3 External Temperature Sensor Host Write Length Register (Index=8Ah, Default=00h) 125
9.7.2.6.4 External Temperature Sensor Host Read Length Register (Index=8Bh, Default=00h) 126
9.7.2.6.5 External Temperature Sensor Host Command (Write Data 1) Register 126
(Index=8Ch, Default=00h)..... 126
9.7.2.6.6 External Temperature Sensor Write Data (2-8) Register (Index=8Dh, Default=--h) 126
9.7.2.6.7 External Temperature Sensor Host Control Register (Index=8Eh, Default=00h)..... 126
9.7.2.6.8 External Temperature Sensor Read Data (1-16) Register (Index=8Fh, Default=--h)..... 127
9.7.2.6.9 PROCHOT# Control Register (Index=95h, Default=--h)..... 127
9.7.2.6.10 PROCHOT# Temperature Limit Register (Index=96h, Default=--h)127
9.7.2.6.11 PCH/SB-TSI Host Status Register (Index=98h, Default=---00000b)128
9.7.2.6.12 PCH/SB-TSI Host Target Address Register (Index=99h, Default=00h)..... 128
9.7.2.6.13 PCH/SB-TSI Host Command Register (Index=9Ch, Default=00h) 128
9.7.2.6.14 PCH/SB-TSI Write Data Register (Index=9Dh, Default=--h)..... 129
9.7.2.6.15 PCH/SB-TSI Host Control Register (Index=9Eh, Default=00h) 129
9.7.2.6.16 PCH/SB-TSI Read Data (1-16) Register (Index=9Fh, Default=--h)129
9.7.2.6.17 Vitual Wire OOB Control Register (Index=C0h, Default=00h) 130
9.7.2.6.18 Vitual Wire GET_OOB Length Register (Index=C1h, Default=00h)130
9.7.2.6.19 Vitual Wire PUT_OOB Length Register (Index=C2h, Default=00h)130
9.7.2.6.20 Vitual Wire GET_OOB Write Data Register (Index=C3h, Default=00h)..... 130
9.7.2.6.21 Vitual Wire PUT_OOB Read Data Register (Index=C4h, Default=00h)..... 130
9.7.2.6.22 PECI and SB-TSI Control Register (Index=C0h, BANK1, Default=--h) 131
9.7.2.6.23 Integer Value of SB-TSI Temperature Reading Register (Index=C1h, BANK1, Default=--h)..... 131
9.7.2.6.24 Fractional Value of SB-TSI Temperature Reading Register (Index=C2h, BANK1, Default=--h)..... 131
9.7.2.6.28 PROCHOT# Control Register (Index=3Eh, BANK2, Default=--h).. 133
9.7.2.6.29 The Highest mode Control Register (Index=4Dh, BANK2, Default=--h) 133
9.7.2.6.30 Coolsense Eanble for TMPIN1/2 Control Register (Index=5Dh, BANK2, Default=--h) 134
9.7.2.6.31 Coolsense Eanble for TMPIN3/4 Control Register (Index=5Eh, BANK2, Default=--h) 134
9.7.2.6.32 Coolsense Eanble for TMPIN5/6 Control Register (Index=5Fh, BANK2, Default=--h) 134
9.7.2.6.33 PECI Bridge Write Address Register (BANK2, Index=70h, Default=--h) 135
9.7.2.6.34 PECI Bridge Read Address Register (BANK2, Index=71h, Default=-

CONFIDENTIAL

-h) 135
9.7.2.6.35 PECI Bridge Control Register (BANK2, Index=72h, Default=--h) .. 135
9.7.2.6.36 PECI Bridge Status Register (BANK2, Index=73h, Default=--h) 135
9.7.2.6.37 PECI Bridge Error Code Register (BANK2, Index=74h, Default=--h) 136
9.7.2.6.38 PECI Bridge CPU0 Temperature Register (BANK2, Index=75h, Default=--h) 136
9.7.2.6.39 PECI Bridge CPU1 Temperature Register (BANK2, Index=76h, Default=--h) 136
9.7.2.6.40 Start PWM default value to FAN1~6 Control Register (BANK2, Index=90h, Default=--h) 136
9.7.2.6.41 Coolsense Raw Data from TMPIN1~6 Register (BANK2, Index=91h~96h, Default=--h) 136
9.7.3 Operation 137
9.7.3.1 Power on Reset and Software Reset 137
9.7.3.2 Starting Conversion 137
9.7.3.3 Voltage and Temperature Inputs 138
9.7.3.4 Layout and Grounding 138
9.7.3.5 Fan Tachometer 139
9.7.3.6 Interrupt of the EC 139
9.7.3.7 FAN Controller 141
9.7.3.7.1 Overview 141
9.7.3.7.2 SmartGuardian - Software Mode 143
9.7.3.7.3 SmartGuardian - Automatic Mode 144
9.7.3.7.4 SmartGuardian - PWM Automatic Mode 145
9.7.3.7.5 SmartGuardian– Closedloop (RPM) Automatic Mode 146
9.7.3.7.6 Extra Vectors 147
9.7.3.7.7 Multi-Curve FAN Control 149
9.7.3.7.8 Multi-Sensor FAN Control 150
9.7.3.7.9 Fan Control Hysteresis 151
9.7.3.7.10 Fan Control Smoothing 152
9.7.3.7.11 FAN Temperature Input 153
9.7.3.8 External Thermal Sensor Programming Procedure 155
9.8 BREATH LED 160
9.9 HP's Coolsense 161
9.10 Serial Port (UART) 162
9.10.1 Data Register 162
9.10.1.1 Receiver Buffer Register (RBR) (Read only, Address offset=0, DLAB=0) 162
9.10.1.2 Transmitter Buffer Register (TBR) (Write only, Address offset=0, DLAB=0) 162
9.10.2 Control Register 163
9.10.2.1 Interrupt Enable Register (IER) (Read/Write, Address offset=1, DLAB=0) 163
9.10.2.2 Interrupt Identification Register (IIR) (Read only, Address offset=2) 163
9.10.2.3 FIFO Control Register (FCR) (Write Only, Address offset=2) 165
9.10.2.4 Divisor Latches (DLL, DLM) (Read/Write, Address offset=0,1 DLAB=0) 165
9.10.2.5 Baud Rate Generator (BRG) 165
9.10.2.6 Scratch Pad Register (Read/Write, Address offset=7) 167
9.10.2.7 Line Control Register (LCR) (Read/Write, Address offset=3) 167
9.10.2.8 Modem Control Register (MCR) (Read/Write, Address offset=4) 168
9.10.3 Status Registers 169
9.10.3.1 Line Status Register (LSR) (Read/Write, Address offset=5) 169
9.10.3.2 ModemStatus Register (MSR) (Read/Write, Address offset=6) 170
9.10.4 Reset 171
9.10.5 Programming 171
9.10.6 Software Reset 171

CONFIDENTIAL

9.10.7 Clock Input Operation 171
9.10.8 FIFO Interrupt Mode Operation 171
9.11 Parallel Port 173
9.11.1 SPP and EPP Mode 173
9.11.1.1 Data Port Register (Base Address 1 + 00h) 174
9.11.1.2 Status Port Register (Base Address 1 + 01h) 174
9.11.1.3 Control Port Register (Base Address 1 + 02h) 174
9.11.1.4 EPP Address Port Register (Base Address 1 + 03h) 175
9.11.1.5 EPP Data Port 0-3 Register (Base Address 1 + 04-07h) 175
9.11.2 EPP Mode Operation 175
9.11.2.1 EPP ADDRESS WRITE 175
9.11.2.2 EPP ADDRESS READ 175
9.11.2.3 EPP DATA WRITE 176
9.11.2.4 EPP DATA READ 176
9.11.3 ECP Mode Operation 176
9.11.3.1 ECP Register Definition 177
9.11.3.2 ECP Mode Description 177
9.11.3.3 ECP Pin Description 178
9.11.3.4 Data Port (Base 1+00h, Modes 000 and 001) 178
9.11.3.5 ecpAFifo Port (Address/RLE) (Base 1 +00h, Mode 011) 178
9.11.3.6 Device Status Register (dsr) (Base 1 +01h, Mode All) 178
9.11.3.7 Device Control Register (dcr) (Base 1+02h, Mode All) 179
9.11.3.8 Parallel Port Data FIFO (cFifo) (Base 2+00h, Mode 010) 179
9.11.3.9 ECP Data FIFO (ecpDFifo) (Base 2+00h, Mode 011) 179
9.11.3.10 Test FIFO (tFifo) (Base 2+00h, Mode 110) 179
9.11.3.11 Configuration Register A (cnfgA) (Base 2+00h, Mode 111) 179
9.11.3.12 Configuration Register B (cnfgB) (Base 2+01h, Mode 111) 179
9.11.3.13 Extended Control Register (ecr) (Base 2+02h, Mode All) 180
9.11.3.14 Mode Switching Operation 181
9.11.3.15 Software Operation (ECP) 181
9.11.3.16 Hardware Operation (DMA) 181
9.11.3.17 Interrupt 182
9.11.3.18 Interrupt-driven Programmed I/O 182
9.11.3.19 Standard Parallel Port 182
9.12 Keyboard Controller (KBC) 183
9.12.1 Host Interface 183
9.12.2 Data Registers and Status Register 184
9.12.3 Keyboard and Mouse Interface 184
9.12.4 KIRQ and MIRQ 184
9.13 Consumer Remote Control (TV Remote) IR (CIR) 185
9.13.1 Overview 185
9.13.2 Features 185
9.13.3 Block Diagram 185
9.13.4 Transmit Operation 186
9.13.5 Receive Operation 186
9.13.6 Register Description and Address 186
9.13.6.1 CIR Data Register (DR) 187
9.13.6.2 CIR Interrupt Enable Register (IER) 187
9.13.6.3 CIR Receiver Control Register (RCR) 188
9.13.6.4 CIR Transmitter Control Register 1 (TCR1) 189
9.13.6.5 CIR Transmitter Control Register (TCR2) 190
9.13.6.6 CIR Transmitter Status Register (TSR) 193
9.13.6.7 CIR Receiver FIFO Status Register (RSR) 193
9.13.6.8 CIR Baud Rate Divisor Low Byte Register (BDLR) 193

CONFIDENTIAL

9.13.6.9 CIR Baud Rate Divisor High Byte Register (BDHR) 194
9.13.6.10 CIR Interrupt Identification Register (IIR) 194
10. DC Electrical Characteristics 195
11. AC Characteristics 199
11.1 Clock Input Timings 199
11.2 LCLK (PCICLK) and LRESET Timings 200
11.3 LPC and SERIRQ Timings 201
11.4 Serial Port, ASKIR, SIR and Consumer Remote Control Timings 202
11.5 Modem Control Timings 203
11.6 EPP Address or Data Write Cycle Timings 203
11.7 Keyboard/Mouse Receive/Send Data Timings 204
11.8 EPP Address or Data Read Cycle Timings 205
11.9 ECP Parallel Port Forward Timings 206
11.10 ECP Parallel Port Backward Timings 207
11.11 RSMRST#and ACPI Power Control Signal Timings 208
11.12 PWRGD2, PWRGD3 Signal Timings 209
11.13 PCIRST#1, PCIRST#2 and PCIRST#3 Signal Timings 210
11.14 Energy-using Product (EuP) Power Control Signal Timings 211
11.15 5VAUX_SW Power Control Signal Timings 212
11.16 DPWROK and SLP_SUS# Timings 214
11.18 RSTCONIN/RSTCONOUT Timings 217
11.19 GP14 Charge Port Power Control Specification 218
11.20 DDR4 Power Control Specification 219
11.21 APL Forced Shutdown Timing 220
11.22 S0ix Sequence Timing 221
12. Package Information 223
13. Ordering Information 225
14. Top Marking Information 227

FIGURES

Figure 4-1. IT8625E Top View (128-LQFP) 7
Figure 7-1. IT8625E EUP Applications Circuitry for Intel ICH 40
Figure 9-1 Flow of Initiating an OOB Message Transcation for Temperature over eSPI Bus 92
Figure 9-2 Flow of Initiating an OOB Message Transcation for PECI over eSPI Bus 92
Figure 9-3 Flow of Receiving an OOB Message Transcation for Temperature over eSPI Bus 92
Figure 9-4 Flow of Receiving an OOB Message Transcation for PECI over eSPI Bus 92
Figure 9-5 Scheme of Platform Reset 93
Figure 9-6. Start Frame Timing 94
Figure 9-7. Stop Frame Timing 94
Figure 9-8. General Logic of GPIO Function 97
Figure 9-9. Application Example 137
Figure 9-10. Temperature Interrupt Response Diagram 139
Figure 9-11. FAN Mode Selection 142
Figure 9-12. Automatic FAN Architecture 144
Figure 9-13. PWM Automatic Mode 145
Figure 9-14. Closed-loop (RPM) Automatic Mode 146
Figure 9-15. Multi-Curve Fan Control 149
Figure 9-16. Multi-Sensor Fan Control 150

CONFIDENTIAL

Figure 9-17. Fan Control Hysteresis 151
Figure 9-18. Fan Control Smoothing 152
Figure 9-19. FAN Controller Overview 153
Figure 9-20. PECI Programming Procedure 155
Figure 9-21. SMBUS Host Programming Procedure 156
Figure 9-22. SB-TSI Host Programming Procedure 157
Figure 9-23. PCH SM-Link Programming Procedure 158
Figure 9-24. DTS Multi-Scan Programming Procedure 159
Figure 9-25. Breath LED Mode Waveform 160
Figure 9-26. Keyboard and Mouse Interface 183
Figure 9-27. CIR Block Diagram 185
Figure 11-1. Clock Input Timings 199
Figure 11-2. LCLK (PCICLK) and LRESET Timings 200
Figure 11-3. LPC and SERIRQ Timings 201
Figure 11-4. Serial Port, ASKIR, SIR and Consumer Remote Control Timings 202
Figure 11-5. Modem Control Timings 203
Figure 11-6. EPP Address or Data Write Cycle Timings 203
Figure 11-7. Keyboard/Mouse Receive/Send Data Timings 204
Figure 11-8. EPP Address or Data Read Cycle Timings 205
Figure 11-9. ECP Parallel Port Forward Timings 206
Figure 11-10. ECP Parallel Port Backward Timings 207
Figure 11-11. RSMRST# Timings 208
Figure 11-12. DPWROK Timings 208
Figure11-13. ACPI Power Signal Timings 208
Figure11-14. PWRGD 2/3 SignalCondition 209
Figure11-15. PWRGD2/3 Signal Timings 210
Figure11-16. PCIRST#1, PCIRST#2 and PCIRST#3 Signal Timings 210
Figure11-17. EuP Function Signal Timings 211
Figure11-18. 5VAUX_SW Signal Timings 212
Figure 11-19. PWRON# Timings 213
Figure11-20. DPWORK Timings 214
Figure11-21. SLP_SUS# Timings 214
Figure11-22. UVP/OVP Application 215
Figure11-23. UVP/OVP notice Mode Timings 216
Figure11-24. RSTCONIN/RSTCONOUT Timings 217
Figure11-25. GP14 USB Charger PortPower Control Timings 218
Figure11-26. DDR4 Power Control Timings 219
Figure 11-27. APL Forced Shutdown Timing 220
Figure 11-28. S0ix Sequence Timing 221

TABLES

Table 4-1. Pins Listed in Numeric Order 8
Table 5-1. Pin Description of Supplies Signals 9
Table 5-2. Pin Description of LPC Bus Interface Signals 9
Table 5-3. Pin Description of eSPI Interface Signals 11

CONFIDENTIAL

Table 5-4. Pin Description of Serial Port 1 Signals 12
Table 5-5. Pin Description of Serial Port 2 Signals 14
Table 5-6. Pin Description of Parallel Port Signals 15
Table 5-7. Pin Description of Hardware Monitor Signals 18
Table 5-8. Pin Description of Fan Controller Signals 18
Table 5-9. Pin Description of Keyboard Controller Signals 21
Table 5-10. APC Signals 22
Table 5-11. Pin Description of Infrared Port Signals 24
Table 5-12. Pin Description of PECI Controller Signals 25
Table 5-13. Pin Description of PCH & SMBUS_Slave I/F 25
Table 5-14. Pin Description of Miscellaneous Signals 26
Table 6-1. GPIO Alternate Function 31
Table 6-2. GPIO Registers and Power Pads Table 36
Table 7-1. Power On Strapping Options 39
Table 8-1. Global Configuration Registers 43
Table 8-2. Serial Port 1 Configuration Registers 44
Table 8-3. Serial Port 2 Configuration Registers 44
Table 8-4. Parallel Port Configuration Registers 44
Table 8-5. Environment Controller Configuration Registers 45
Table 8-6. KBC(Keyboard) Configuration Registers 46
Table 8-7. KBC(Mouse) Configuration Registers 46
Table 8-8. GPIO Configuration Registers 47
Table 8-9. Consumer IR Configuration Registers 49
Table 8-10. Base Address of Logical Devices 49
Table 8-11Interrupt Level MappingTable 87
Table 8-12DMA Channel MappingTable 87
Table 8-13Location MappingTable 88
Table 9-1 LPC Mode Internal clk_in Control Table 89
Table 9-2. Address Map on LPC Bus 99
Table 9-3. Environment Controller Registers (Bank 0) 100
Table 9-4. Environment Controller Registers (Bank 1) 105
Table 9-5. Environment Controller Registers (Bank 2)Index 105
Table 9-6. FAN_CTL1-6 PWM Control Register 115
Table 9-7. FAN 1-6 Smoothing Control Registers 116
Table 9-8. Smoothing Frequency Selection Table 116
Table 9-9. FAN Extra-Vector Registers 120
Table 9-10. TMPIN Source Selection Table 123
Table 9-11. TMPIN Source Selection – 1 (TSS1) 123
Table 9-12. TMPIN Source Selection – 2 (TSS2) 124
Table 9-13. Software Mode Control Registers Summary 143
Table 9-14. Automatic FAN Control Registers Summary 144
Table 9-15. FAN Extra-Vector Registers 148
Table 9-16. FAN Hystersis & Smoothing Control Registers Summary 151
Table 9-17. Serial Channel Registers 162
Table 9-18. Interrupt Identification Register 164

CONFIDENTIAL

Table 9-19. Receiver FIFO Trigger Level Encoding 165
Table 9-20. Baud Rate Using (24 MHz ÷ 13) Clock 166
Table 9-21. Stop Bit Number Encoding 167
Table 9-22. Reset Control of Register and Pinout Signal 171
Table 9-23. Parallel Port Connector in Different Modes 173
Table 9-24. Address Map and Bit Map for SPP and EPP Mode 173
Table 9-25. Bit Map of ECP Register 176
Table 9-26. Mode and Description of Extended Control Register (ECR) 180
Table 9-27. Data Register READ/WRITE Controls 183
Table 9-28. Status Register 184
Table 9-29. CIR Register 186
Table 9-30. Modulation Carrier Frequency 191
Table 9-31. Receiver Demodulation Low Frequency (HCFS = 0) 192
Table 9-32. Receiver Demodulation High Frequency (HCFS = 1) 193
Table 11-1. RSMRST# Timings Parameter 214
Table 11-2. UVP/OVP Timings Parameter 215
Table 11-3. UVP/OVP Detecting Voltage Threshold 215
Table 11-4. DDR4Timings Parameter 219

CONFIDENTIAL

CONFIDENTIAL

1. Features

- **Low Pin Count Interface**
  - Complies with Intel Low Pin Count Interface Specification Rev. 1.1
  - Supports LDRQ#, SERIRQ protocols
  - Supports PCI PME# interfaces
  - Supports CLKRUN#
  - Supports 3.3V/1.8V level

- **eSPI Interface**
  - Compatible with eSPI specification V 1.0
  - Supports PUT_IOWR_SHORT, PUT_IORD_SHORT commands
  - Supports OOB temperature
  - Supports VW IRQ/System event
  - Supports eSPI 20MHz to 66MHz

- **ACPI Compliant**
  - ACPI V. 2.0 compliant
  - Register sets compatible with “Plug and Play ISA Specification V. 1.0a”
  - Supports 8logical devices

- **Enhanced Hardware Monitor**
  - Built-in 8-bit Analog to Digital Converter
  - 3 thermal inputs from either remote thermal resistor or thermal diode or diode-connected transistor, the temperature sensor of the current mode or PECI
  - 7 voltage monitor inputs (3VSB and VBAT measured internally)
  - 1 chassis open detection input with low power Flip-Flop dual-powered by battery or 3VSB
  - Watch Dog comparison of all monitored values
  - PECI/SB-TSI/PCH SM-Link I/F supporting external temperature reading for fan control

- **Fan Speed Controller**
  - Provides RPM and PWM control
  - Supports 6 programmable Pulse Width Modulation (PWM/RPM) outputs
  - 256 steps of PWM mode
  - Supports High Speed Fan Monitor (Over 16000 RPM)
  - Monitors 6 fan tachometer inputs
  - Supports 8 CPU addresses via PECI Interface
  - Supports thermal data inputs from PCH via SM-Link(Processor Package Temperature, PCH, CPU, MCH, DIMM0~3)
  - Fan Control Soure including thermal resistor, thermal diode, PECI, PCH SM-Link, SB-TSI, and virtual sensor

- **SmartGuardian Controller**
  - Provides programmably automatic fan speed control
  - Supports mix-and-match for temperature inputs and fan speed control outputs
  - Overrides fan speed controller during catastrophic situations
  - Provides audible over temperaturewarning

- **Two 16C550 UARTs**
  - Supports two standard Serial Ports
  - RS485 auto flow control
  - Supports UART Port80

- **Consumer Remote Control (TV remote) IR withPower-up Feature**
  - Supports two CIR Ports

- **IEEE 1284 Parallel Port**
  - Standard mode -- Bi-directional SPP compliant
  - Enhanced mode -- EPP V. 1.7 and V. 1.9 compliant
  - High-speed mode -- ECP, IEEE 1284 compliant
  - Back-drive current reduction
  - Printer power-on damage reduction
  - Supports POST (Power-On Self Test) Data Port

- **Keyboard Controller**
  - 8042 compatible with PS/2 keyboard and mouse
  - Hardware KBC
  - GateA20 and Keyboard reset output
  - Supports Multiple keyboard power-on events (Any Keys, 2-5 Sequential Keys, 1-3 simultaneous Keys)
  - Supports mouse double-click and/or mouse move power on events

- **80 General Purpose I/O Pins**
  - Input mode supports either switch de-bounce or programmable external IRQ input routing
  - Output mode supports 2 sets of programmable LED blinking periods

- **Watch Dog Timer**
  - Time resolution 1 minute or 1 second, maximum 65535 minutes or 65535 seconds
  - Output to KRST#and PWRGD when expired

- **ITE’s Innovative Automatic Power-failure Resume and Power Button De-bounce**

CONFIDENTIAL

- **Eco-design of Energy-using Product (EuP), Extra Low Power S5 Control**
- **Support Intel S0ix Power Sequence Control**
- **5VAUX_SW Control**
- **Built-in 32.768 kHz Oscillator**
- **Single 24/48 MHz Clock Input**
- **3VSB and VBAT Supported**
- **+3.3V Power Supply**
- **SMBus IsolationSupported**
- **Over Voltage/Under Voltage Protection (OVP/UVP)**
  - Supports two modes: force-typeand notice type
- **Case Open Detection**
- **ResetconIN/OUT with De-bounce**
- **128-Pin LQFP**
- **RoHS Compliant (100% Green Available)**

CONFIDENTIAL

2. General Description

The IT8625E is a highly integrated Super I/O using the Low Pin Count Interface.It provides the most commonly used legacy Super I/O functionality plus the latest Environment Control initiatives, including H/W Monitor and Fan Speed Controller. The device's LPC interface complies with Intel "LPC Interface Specification Rev. 1.1". The IT8625E is ACPI & LANDesk compliant.

The IT8625E features an enhanced hardware monitor providing threethermal inputs from remote thermal resistors, or thermal diode or diode-connected transistor (2N3904/2N3906). The device employs ITE's innovative intelligent automatic Fan speed control functions (SmartGuardian) to protect the system while reducing the system noise and power consumption.The Fan Speed Controller can control up to six fan speeds through six separate 256stepsof Pulse Width Modulation (PWM) output pins and monitor up to sixFANs' Tachometer inputs.

In addition, it features two 16C550 standard compatible enhanced UARTs performing asynchronous communication, one multi-mode high-performance parallel port supporting bi-directional Standard Parallel Port (SPP), Enhanced Parallel Port (EPP V. 1.7 and EPP V. 1.9), and IEEE 1284 compliant Extended Capabilities Port (ECP), one integratedKeyboard Controller, nineGPIO ports controlling up to 79 GPIO pins, which can be individually enabled or disabled via software configuration registers, and IR interface supported.

Regarding eco-design of Energy-using Product (EuP), IT8625E provides not only a solution to reducing power consumption in S5 State but also Keyboard, Mouse, RI# and CIR wakeup events in S3/S5 State.

The IT8625E utilizes power-saving circuitry to reduce power consumption, and once a logical device is disabled,, the inputs are inhibited with the clock disabled and the outputs are tri-stated. The device requires a single 24/48 MHz clock input and operates with +3.3V power supply. The IT8625E is available in 128-pin LQFP Package.

CONFIDENTIAL

This page is intentionally left blank.

CONFIDENTIAL

3. Block Diagram

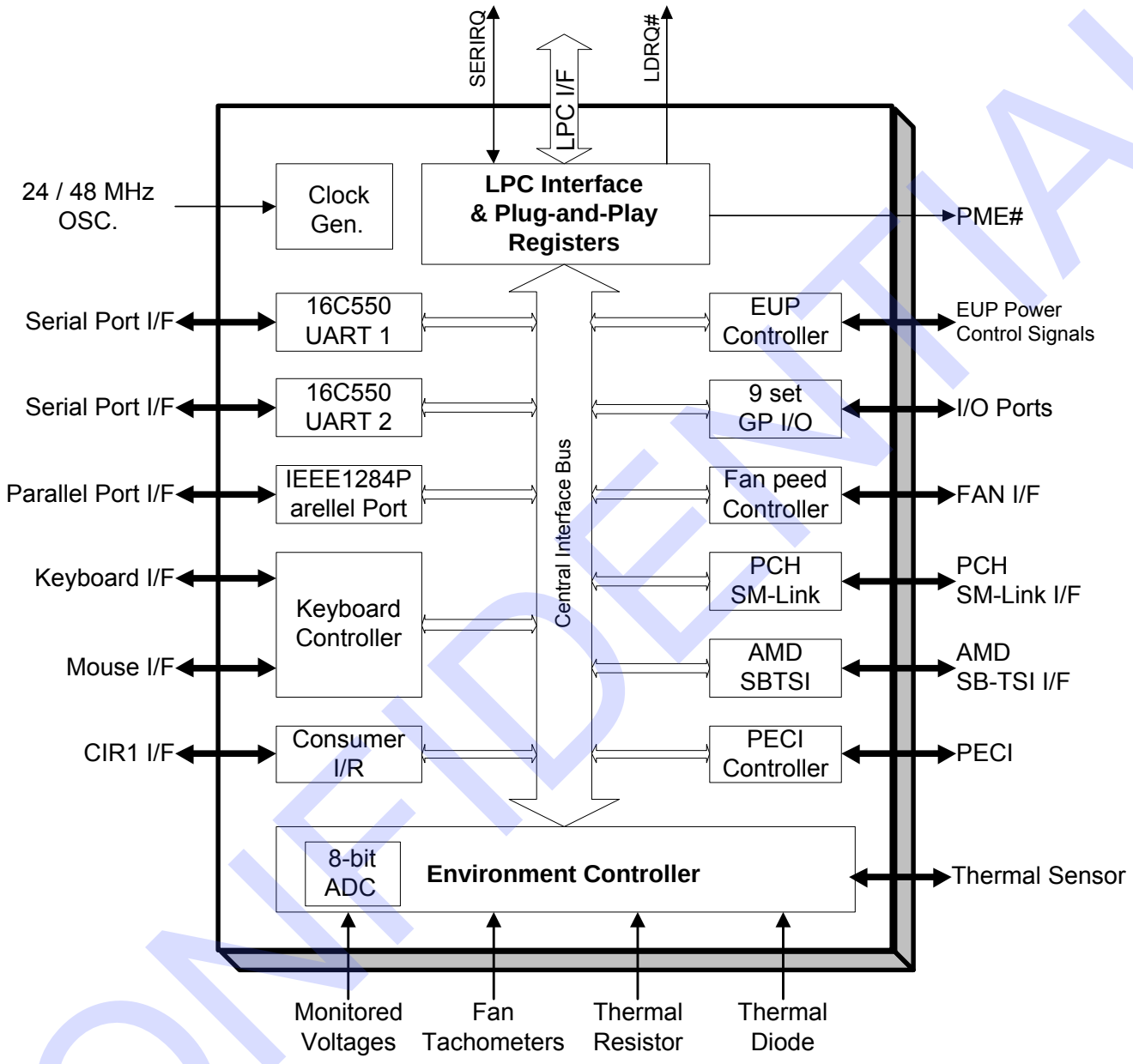

CONFIDENTIAL

This page is intentionally left blank.

CONFIDENTIAL

4. Pin Configuration

Figure 4-1. IT8625E Top View (128-LQFP)

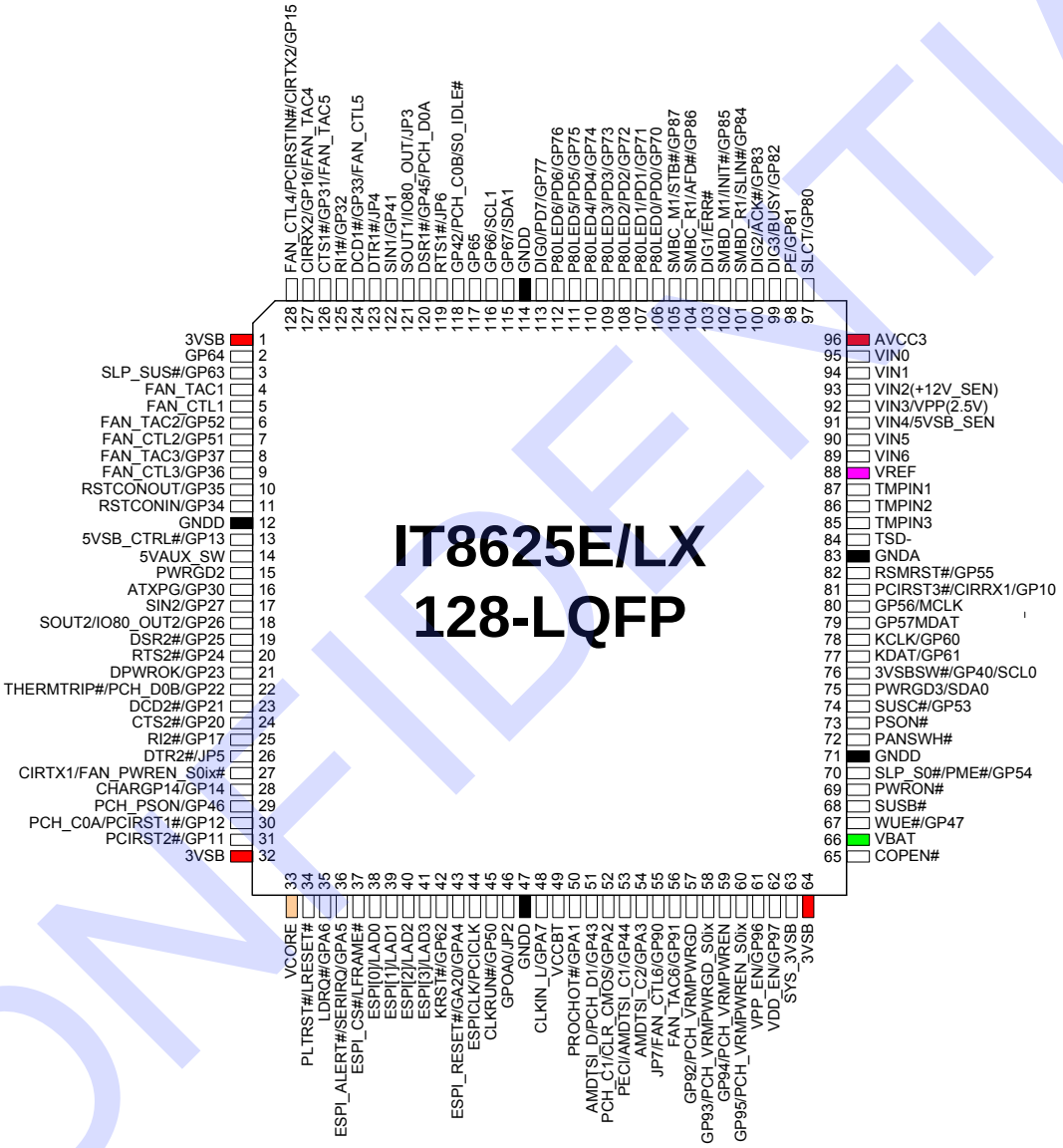

CONFIDENTIAL

Table 4-1. Pins Listed in Numeric Order

Pin	Signal	Pin	Signal	Pin	Signal	Pin	Signal
1	3VSB	33	VCORE	65	COPEN#	97	SLCT/GP80
2	GP64	34	PLTRST#/LRESET#	66	VBAT	98	PE/GP81
3	SLP_SUS#/GP63	35	LDRQ#/GPA6	67	WUE#/GP47	99	DIG3/BUSY/GP82
4	FAN_TAC1	36	ESPI_ALERT#/ SERIRQ/GPA5	68	SUSB#	100	DIG2/ACK#/GP83
5	FAN_CTL1	37	ESPI_CS#/ LFRAME#	69	PWRON#	101	SMBD_R1/SLIN#/ GP84
6	FAN_TAC2/GP52	38	ESPI_IO[0]/LAD0	70	SLP_S0#//PME#/GP5 4	102	SMBD_M1/INIT#/ GP85
7	FAN_CTL2/GP51	39	ESPI_IO[1]/LAD1	71	GNDD	103	DIG1/ERR#
8	FAN_TAC3/GP37	40	ESPI_IO[2]/LAD2	72	PANSWH#	104	SMBC_R1/AFD#/ GP86
9	FAN_CTL3/GP36	41	ESPI_IO[3]/LAD3	73	PSON#	105	SMBC_M1/STB#/ GP87
10	RSTCONOUT/GP35	42	KRST#/ GP62	74	SUSC#/GP53	106	P80LED0/ PD0/GP70
11	RSTCONIN/GP34	43	ESPI_RESET#/ GA20/GPA4	75	PWRGD3 / SDA0	107	P80LED1/ PD1/GP71
12	GNDD	44	ESPICLK/PCICLK	76	3VSBSW#/GP40/ SCL0	108	P80LED2/ PD2/GP72
13	5VSB_CTRL#/GP13	45	CLKRUN#/GP50	77	KDAT/GP61	109	P80LED3/ PD3/GP73
14	5VAUX_SW	46	GPOA0/JP2	78	KCLK/GP60	110	P80LED4/ PD4/GP74
15	PWRGD2	47	GNDD	79	GP57/MDAT	111	P80LED5/ PD5/GP75
16	ATXPG/GP30	48	CLKIN_L/GPA7	80	GP56/MCLK	112	P80LED6/ PD6/GP76
17	SIN2/GP27	49	VCCBT	81	PCIRST3#/CIRRX1/ GP10	113	DIG0/ PD7/GP77
18	SOUT2/ IO80_OUT2/GP26	50	PROCHOT#/GPA1	82	RSMRST#/GP55	114	GNDD
19	DSR2#/GP25	51	SB-TSI_D/ PCH_D1/GP43	83	GNDA	115	GP67/SDA1
20	RTS2#/GP24	52	PCH_C1/GPA2	84	TSD-	116	GP66/SCL1
21	DPWORK/GP23	53	PECI/SB-TSI_C1/ GP44	85	TMPIN3	117	GP65
22	THERMTRIP#/ PCH_D0B/GP22	54	SB-TSI_C2/GPA3	86	TMPIN2	118	GP42/ PCH_C0B/ S0_IDLE#
23	DCD2#/GP21	55	FAN_CTL6/GP90/ JP7	87	TMPIN1	119	RTS1#/JP6
24	CTS2/GP20	56	FAN_TAC6/GP91	88	VREF	120	DSR1#/GP45/ PCH_D0A
25	RI2#/GP17	57	PCH_VRMPWRGD/ GP92	89	VIN6	121	SOUT1/ IO80_OUT1/JP3
26	DTR2#/JP5	58	PCH_VRMPWRGD_ S0ix/GP93	90	VIN5	122	SIN1/GP41
27	CIRTX1/ FAN_PWREN_S0ix	59	PCH_VRMPWREN/ GP94	91	VIN4/ 5VSB_SEN	123	DTR1#JP4
28	CHARGP14/GP14	60	PCH_VRMPWREN_ S0ix/GP95	92	VIN3/VPP(2.5V)	124	DCD1#/GP33/FAN _CTL5
29	PCH_PSON#/GP46	61	VPP_EN/GP96	93	VIN2(+12_SEN)	125	RI1#GP32
30	PCIRST1#/ PCH_C0A/GP12	62	VDD_EN/GP97	94	VIN1/	126	CTS1#/GP31/ FAN_TAC5
31	PCIRST2#/GP11	63	SYS_3VSB	95	VIN0/	127	CIRRX2/GP16/ FAN_TAC4
32	3VSB	64	3VSB	96	AVCC3	128	FAN_CTL4/ PCIRSTIN#/ CIRTX2/GP15

CONFIDENTIAL

5. Pin Description

The IT8625E is a part with 3.3V voltage but it can be in the application of both 3.3V and 1.8V.

- The I/O buffer output pads are backdrive protected.
- The LPC interface pins are with 3.3V/1.8V voltage.
- The Hardware Monitoring analog pins are 3.3V only. (VIN0~6 and TEMPIN1~3 etc.)
- The input voltage for all other pins is 5V tolerance(ex. ATXPG, FAN_TAC etc)
- For DO pins, It is not 5V tolerant and should not be pull-up to 5V
- For GPIO Power Plan, please refer toTable 6-2.

Table 5-1. Pin Description of Supplies Signals

Pin(s) No.	Symbol	Attribute	Power	Description
1, 32, 64	**3VSB**	PWR	-	***+3.3V Standby Power Supply***
96	**AVCC3**	PWR	-	***+3.3V Analog Power Supply***
66	**VBAT**	PWR	-	***+3V Battery Supply***
33	**VCORE**	AO	-	***Internal Power supply(1.8V)*** It is required toconnect this pin with the external capacitance.
49	**VCCBT**	PWR		***+3.3V/+1.8V Standby Power Supply for LPC/eSPI I/F***
12, 47, 71,114	**GNDD**	GND	-	***Digital Ground***
83	**GNDA**	GND	-	***Analog Ground***

Table 5-2. Pin Description of LPC Bus Interface Signals

Pin(s) No.	Symbol	Attribute	Power	Description
34	**LRESET#**	DI	AVCC3	***LPC RESET #*** EC block will not be reset by LRESET#, which is controlled by AVCC3 PWRGD.
35	**LDRQ#**	DO8	VCCBT	***LPC DMA Request #*** This is an encoded signal for DMA channel select.
	GPA6	DIOD8	refer to Table 6-2	***General Purpose I/O A6*** The function of this symbol is General Purpose I/O Port A Bit 6.
36	**SERIRQ**	DIO16	VCCBT	***Serial IRQ***
	GPA5	DIOD8	refer to Table 6-2	***General Purpose I/O A5*** The function of this symbol is General Purpose I/O Port A Bit 5. Don't pull up to 3.3V when VCCBT=1.8V.
37	**LFRAME#**	DI	VCCBT	***LPC Frame #*** This signal indicates the start of the LPC cycle.
38-41	**LAD[0:3]**	DIO16	VCCBT	***LPC Address/Data 0-3*** 4-bit LPC address/bi-directional data lines. LAD0 is LSB and LAD3 is MSB.
44	**PCICLK**	DI	VCCBT	***PCI Clock*** 33 MHz PCI clock input for LPC I/F and SERIRQ.
45	**CLKRUN#**	DOD8	AVCC3	***LPC CLKRUN# Signal***
	GP50	DOD8	refer to Table 6-2	***General Purpose I/O 50*** The function of this symbol is General Purpose I/O Port 5 Bit 0.
70	**SLP_S0#**	DI	3VSB	***Sleep S0# Input*** The function of this symbol is SLP_S0# Input.
	PME#	DOD8	3VSB	***Power Management Event #*** The function of this symbol is Power Management Event #. It supports the PCI PME# interface. This signal allows the peripheral to request the system to wake up from the D3 (cold) state.

CONFIDENTIAL

Pin(s) No.	Symbol	Attribute	Power	Description
	GP54	DIOD8	refer to Table 6-2	***General Purpose I/O 54*** The function of this symbol is General Purpose I/O Port 5 Bit 4.

CONFIDENTIAL

Table 5-3. Pin Description of eSPI Interface Signals

Pin(s) No.	Symbol	Attribute	Power	Description
34	**PLTRST#**	DI	AVCC3	***Platform Reset*** The PCH asserts PLTRST# to reset devices on the platform.
36	**ESPI_ALERT#**	DO8	VCCBT	***eSPI ALERT#*** eSPI discretes Alert signal from eSPI slave to the PCH.
37	**ESPI_CS#**	DI	VCCBT	***eSPI Chip Select*** PCH drives the CS# signal low to select the eSPI slave for the transaction.
38-41	**ESPI_IO[0:3]**	DIO16	VCCBT	***eSPI I/O[0:3]*** Bi-directional pins used to transfer data[0:3] between the PCH and eSPI slave device.
43	**ESPI_RESET#**	DI	VCCBT	***eSPI Reset*** eSPI reset input signal from the PCH to eSPI slave.
44	**ESPICLK**	DI	VCCBT	***eSPI Clock*** eSPI clock input from the PCH to slave device.

CONFIDENTIAL

Table 5-4. Pin Description of Serial Port 1 Signals

Pin(s) No.	Symbol	Attribute	Power	Description
126	**CTS1#**	DI	AVCC3	***Clear to Send 1 #*** When this signal is low, it indicates that the MODEM or data set is ready to accept data. The CTS# signal is a MODEM status input whose condition can be tested by reading the MSR register.
	GP31	DIOD8	refer to Table 6-2	***General Purpose I/O 31*** The function of this symbol is General Purpose I/O Port 3 Bit 1.
	FAN_TAC5	DI	AVCC3	***FAN Tachometer Input 5*** The function of this symbol is Fan Tachometer Input 5.0 to +5V Amplitude Fan Tachometer Input.
125	**RI1#**	DI	3VSB	***Ring Indicator 1 #*** When this signal is low, it indicates that a telephone ring signal has been received by the MODEM. The RI# signal is a MODEM status input whose condition can be tested by reading the MSR register.
	GP32	DIOD8	refer to Table 6-2	***General Purpose I/O 32*** The function of this symbol is General Purpose I/O Port 3 Bit 2.
124	**DCD1#**	DI	AVCC3	***Data Carrier Detect 1 #*** When this signal is low, it indicates that the MODEM or data set has detected a carrier. The DCD# signal is a MODEM status input whose condition can be tested by reading the MSR register.
	GP33	DIOD8	refer to Table 6-2	***General Purpose I/O 33*** The function of this symbol is General Purpose I/O Port 3 Bit 3.
	FAN_CTL5	DOD8	AVCC3	***Fan Control Output 5*** The function of this symbol is Fan Control Output 5. (PWM output signal to Fan's FET.)
123	**DTR1#**	DO8	AVCC3	***Data Terminal Ready 1 #*** DTR# is used to indicate to the MODEM or data set that the device is ready to exchange data. DTR# is activated by setting the appropriate bit in the MCR register to 1. After a Master Reset operation or during Loop mode, DTR# is set to its inactive state. For the power-on strapping option, please refer to Table 7-1. Power On Strapping Options on page 39.
	JP4	DI	3VSB	***Power-On Strapping 4*** For the power-on strapping option, please refer to Table 7-1. Power On Strapping Options on page 39.
122	**SIN1**	DI	AVCC3	***Serial Data Input 1*** This input receives serial data from the communications link.
	GP41	DIOD8	refer to Table 6-2	***General Purpose I/O 41*** The function of this symbol is General Purpose I/O Port 4 Bit 1.
121	**IO80_OUT1**	DO8	AVCC3	***UART Port 80Output 1*** The function of this symbol is LPCThe function of this symbol is LPC Port 80 output by SOUT1 in UART protocol.Port 80 output 1.
	SOUT1	DO8	AVCC3	***Serial Data Output 1*** This output sends serial data to the communications link. This signal is set to a marking state (logic 1) after a Master Reset operation or when the device is in one of the Infrared communications modes.

CONFIDENTIAL

Pin(s) No.	Symbol	Attribute	Power	Description
				For the power-on strapping option, please refer to Table 7-1. Power On Strapping Options on page 39.
	JP3	DI	3VSB	***Power-On Strapping 3*** For the power-on strapping option, please refer to Table 7-1. Power On Strapping Options on page 39.
120	**DSR1#**	DI	AVCC3	***Data Set Ready1 #*** When this signal is low, it indicates that the MODEM or data set is ready to establish a communications link. The DSR# signal is a MODEM status input whose condition can be tested by reading the MSR register.
	GP45	DIOD8	refer to Table 6-2	***General Purpose I/O 45*** The function of this symbol is General Purpose I/O Port 4 Bit 5.
	PCH_D0A	DIOD8	AVCC3	***PCH SM-Link Set 0 Data Pin 0A*** The function of this symbol is PCH SM-Link Data.
119	**RTS1#**	DO8	AVCC3	***Request to Send 1 #*** When this signal is low, the output indicates to the MODEM or data set that the device is ready to send data. RTS# is activated by setting the appropriate bit in the MCR register to 1. After a Master Reset operation or during Loop mode, RTS# is set to its inactive state. For the power-on strapping option, please refer to Table 7-1. Power On Strapping Options on page 39.
	JP6	DI	3VSB	***Power-On Strapping 6*** For the power-on strapping option, please refer to Table 7-1. Power On Strapping Options on page 39.

CONFIDENTIAL

Table 5-5. Pin Description of Serial Port 2 Signals

Pin(s) No.	Symbol	Attribute	Power	Description
26	**DTR2#**	DO8	AVCC3	***Data Terminal Ready 2 #*** The function of this symbol is Data Terminal Ready 2 #.
	JP5	DI	AVCC3	***Power-On Strapping 5*** For the power-on strapping option, please refer to Table 7-1. Power On Strapping Options on page 39.
25	**RI2#**	DI	3VSB	***Ring Indicator 2 #*** The function of this symbol is Ring Indicator 2 #.
	GP17	DIOD8	refer to Table 6-2	***General Purpose I/O 17*** The function of this symbol is General Purpose I/O Port 1 Bit 7.
24	**CTS2#**	DI	AVCC3	***Clear to Send 2 #*** The function of this symbol is Clear to Send 2 #. Please refer to the description of CTS1# on page 12
	GP20	DIOD8	refer to Table 6-2	***General Purpose I/O 20*** The function of this symbol is General Purpose I/O Port 2 Bit 0.
23	**DCD2#**	DI	AVCC3	***Data Carrier Detect 2 #*** The function of this symbol is Data Carrier Detect 2 #. Please refer to the description of DCD1# on page 12
	GP21	DIOD8	refer to Table 6-2	***General Purpose I/O 21*** The function of this symbol is General Purpose I/O Port 2 Bit 1.
20	**RTS2#**	DO8	AVCC3	***Request to Send 2 #*** The function of this symbol is Request to Send 2 #. Please refer to the description of RTS1# on page 12
	GP24	DIOD8	refer to Table 6-2	***General Purpose I/O 24*** The function of this symbol is General Purpose I/O Port 2 Bit 4.
19	**DSR2#**	DI	AVCC3	***Data Set Ready 2 #*** The function of this symbol is Data Set Ready 2 #. Please refer to the description of DSR1# on page 12
	GP25	DIOD8	refer to Table 6-2	***General Purpose I/O 25*** The function of this symbol is General Purpose I/O Port 2 Bit 5.
18	**IO80_OUT2**	DO8	AVCC3	***UART Port 80Output 2*** The function of this symbol is LPC Port 80 output by SOUT2 in UART protocol.
	SOUT2	DO8	AVCC3	***Serial Data Output 2*** The function of this symbol is Serial Data Output 2. Please refer to the description of SOUT1 on page 12
	GP26	DIOD8	refer to Table 6-2	***General Purpose I/O 26*** The function of this symbol is General Purpose I/O Port 2 Bit 6.
17	**SIN2**	DI	AVCC3	***Serial Data Input 2*** The function of this symbol is Serial Data Input 2. Please refer to the description of SIN1 on page 12.
	GP27	DIOD8	refer to Table 6-2	***General Purpose I/O 27*** The function of this symbol is General Purpose I/O Port 2 Bit 7.

CONFIDENTIAL

Table 5-6. Pin Description of Parallel Port Signals

Pin(s) No.	Symbol	Attribute	Power	Description
97	**SLCT**	DI	AVCC3	***Printer Select*** The function of this symbol is Printer Select. This signal goes high when the line printer has beenselected.
	GP80	DIOD24	refer to Table 6-2	***General Purpose I/O 80*** The function of this symbol is General Purpose I/O Port 8 Bit 0. The function will be SLTC if LDN3 (parallel port) is enabled; otherwise, GP80.
98	**PE**	DI	AVCC3	***Printer Paper End*** The function of this symbol is Printer Paper End. Thissignal is set high by the printer when it runs out of paper.
	GP81	DIOD8	refer to Table 6-2	***General Purpose I/O 81*** The function of this symbol is General Purpose I/O Port 8 Bit 1. The function will be PE if LDN3 (parallel port) is enabled; otherwise, GP81.
99	**DIG3**	DOD24	AVCC3	***LED Display Digital Bit 3(MSB)***
	BUSY	DI	AVCC3	***Printer Busy*** The function of this symbol is Printer Busy. This signal goes high when the line printer has a local operation in progress and cannot accept any data.
	GP82	DIOD8	refer to Table 6-2	***General Purpose I/O 82*** The function of this symbol is General Purpose I/O Port 8 Bit 2. The functionwill be BUSY when LDN3 (parallel port) is enabled; otherwise, GP82.
100	**DIG2**	DOD24	AVCC3	***LED Display Digital Bit 2***
	ACK#	DI	AVCC3	***Printer Acknowledge #*** The function of this symbol is Printer Acknowledge #. This signal goes low to indicate that the printer has already received a character and is ready to accept another one.
	GP83	DIOD8	refer to Table 6-2	***General Purpose I/O 83*** The function of this symbol is General Purpose I/O Port 8 Bit 3. The function will be ACK# if LDN3 (parallel port) is enabled; otherwise, GP83.
101	**SMBD_R1**	IO_SW	3VSB	***SMBus Isolation Set 1*** The function of this symbol is SMBus Isolation Circuit.
	SLIN#	DIO24	AVCC3	***Printer Select Input #*** The function of this symbol is Printer Select Input #. When this signal is low, the printer is selected and itis derived from the complement of bit 3 of Control Port Register (Base Address 1 + 02h) (refer to page 174).
	GP84	DIOD24	refer to Table 6-2	***General Purpose I/O 84*** The function of this symbol is General Purpose I/O Port8 Bit 4. The function willbe SLIN# if LDN3 (parallel port) is enabled; otherwise, GP84.
102	**SMBD_M1**	IO_SW	3VSB	***SMBus Isolation Set 1*** The function of this symbol is SMBus Isolation Circuit.
	INIT#	DIO24	AVCC3	***Printer Initialize #*** The function of this symbol is Printer Initialize #. When this signal is low, the printer is selected and it is derived from the complement of bit 2 of Control Port Register (Base Address 1 + 02h) (refer to page 174).

CONFIDENTIAL

Pin(s) No.	Symbol	Attribute	Power	Description
	GP85	DIOD24	refer to Table 6-2	***General Purpose I/O 85*** The function of this symbol is General Purpose I/O Port8 Bit 5. The function will be INIT# if LDN3 (parallel port) is enabled; otherwise, GP85.
103	**DIG1**	DOD24	AVCC3	***LED Display Digital Bit 1***
	ERR#	DI	AVCC3	***Printer Error #*** The function of this symbol is Printer Error **#**, which will be configured by programming the software configuration registers (LDN3 (parallel port) enabled). When this signal is low, it indicates that the printer has encountered an error and the error message can be read from bit 3 of Status Port Register (Base Address 1 + 01h) (refer to page 174).
104	**SMBC_R1**	IO_SW	3VSB	***SMBus Isolation Set 1*** The function of this symbol is SMBus Isolation Circuit.
	AFD#	DIO24	AVCC3	***Printer Auto Line Feed #*** The function of this symbol is Printer Auto Line Feed **#**. When this signal is low, it is derived from the complement of bit 1 ofControl Port **Register** (Base Address 1 + 02h) (refer to page 174) and is used to advance one line after each line is printed.
	GP86	DIOD24	refer to Table 6-2	***General Purpose I/O 86*** The function of this symbol is General Purpose I/O Port8 Bit 6. The function will be AFD# if LDN3 (parallel port) is enabled; otherwise, GP86.
105	**SMBC_M1**	IO_SW	3VSB	***SMBus Isolation Set 1*** The function of this symbol is SMBus Isolation Circuit.
	STB#	DI	AVCC3	***Printer Strobe #*** The function of this symbol is Printer Strobe. When this signal is low, it is the complement of bit 0 of Control Port Register (Base Address 1 + 02h) (refer to page 174) and is used to strobe the printing data into the printer.
	GP87	DIOD24	refer to Table 6-2	***General Purpose I/O 87*** The function of this symbol is General Purpose I/O Port8 Bit 7. The function will be STB# if LDN3 (parallel port) is enabled; otherwise, GP87.
106-107	**P80LED[0-6]**	DOD8	AVCC3	***Port80 LED Data 0-6***
	PD[0:6]	DIO24	AVCC3	***Parallel Port Data [0:6]*** The function of this symbol is Parallel Port Data [0:1]. This bus provides a byte-wide input or output to the system. The eight lines are held in a high impedance state when the port is deselected.
	GP7[0:6]	DIOD24	refer to Table 6-2	***General Purpose I/O 7 [0:6]*** The function of this symbol is General Purpose I/O Port 0-1. The function will be PD[0:1] if LDN3 (parallel port) is enabled; otherwise; GP7[0:1].
113	**DIG0**	DOD24	AVCC3	***LED Display Digital Bit 0(LSB)***
	PD7	DIO24	AVCC3	***Parallel Port Data 7*** The function of this symbol is Parallel Port Data7. This bus

CONFIDENTIAL

Pin(s) No.	Symbol	Attribute	Power	Description
				provides a byte-wide input or output to the system. The eight lines are held in a high impedance state when the port is deselected.
	GP77	DIOD24	refer to Table 6-2	***General Purpose I/O 77*** The function of this symbol is General Purpose I/O Port 5-7. The function will be PD7 if LDN3 (parallel port) is enabled; otherwise; GP77

CONFIDENTIAL

Table 5-7. Pin Description of Hardware Monitor Signals

Pin(s) No.	Symbol	Attribute	Power	Description
95	**VIN0**	AI	AVCC3	***Voltage Analog Input 0*** The function of this symbol is 0 to 2.8V FSR Analog Input.
94	**VIN1**	AI	AVCC3	***Voltage Analog Input 1*** The function of this symbol is 0 to 2.8V FSR Analog Input.
93	**VIN2 (+12V_SEN)**	AI	AVCC3	***Voltage Analog Input 2 (+12V power detector)*** The function of this symbol is0 to 2.8V FSR Analog Input. Besides, it is the power detector for PWRGD2/3. Please refer to section 11.12 PWRGD2, PWRGD3 on page 209 for the detail.
92	**VIN3**	AI	AVCC3	***Voltage Analog Input 3*** The function of this symbol is0 to 2.8V FSR Analog Input. Besides, it is the power detector for PWRGD2/3. Please refer to section 11.12 PWRGD2, PWRGD3 on page 209 for the detail.
	VPP(2.5V)	AI	3VSB	***VPP(2.5V) Analog Input*** The function of this symbol is VPP(2.5V) Analog Input. The function configuration of this pin is determined by the power-on strapping option (JP7).
91	**VIN4**	AI	AVCC3	***Voltage Analog Input 4*** The function of this symbol is 0 to 2.8V FSR Analog Input.
	5VSB_SEN	AI	3VSB	***Systme 5VSB Monitor*** The function of this symbol is Analog Input for System 5VSB Monitor. When the voltage drops below 1.5V (typical), the monitor circuit will assert DPWROK. The function configuration of this pin is determined by the LDN04h\FAh[bit5].=1
90	**VIN5**	AI	AVCC3	***Voltage Analog Input 5*** The function of this symbol is 0 to 2.8V FSR Analog Input.
89	**VIN6**	AI	AVCC3	***Voltage Analog Input 6*** The function of this symbol is 0 to 2.8V FSR Analog Input.
88	**VREF**	AO	AVCC3	***Reference Voltage Output (2.8V)*** Regulated and referred voltage for external temperature sensors and negative voltage monitors.
87-85	**TMPIN[1:3]**	AI	AVCC3	***External Thermal Inputs [1:3]*** These pins are connected to thermistors [1:3] or thermal temperature sensors.
84	**TSD-**	AI	AVCC3	***Thermal Diode Negative Input***
65	**COPEN#**	DI	3VSB or VBAT	***Case Open Detection #*** The Case Open Detection is connected to a specially designed low power CMOS flip-flop dual-powered by battery or 3VSB for case open state preservation during power loss. Please refer to LDN7\FBh[bit7] in Section 0

Table 5-8. Pin Description of Fan Controller Signals

Pin(s) No.	Symbol	Attribute	Power	Description
5	**FAN_CTL1**	DOD8	AVCC3	***Fan Control Output 1*** The function of this symbol is Fan Control Output 1. (PWM output signal to Fan's FET.)
4	**FAN_TAC1**	DI	AVCC3	***Fan Tachometer Input 1*** The function of this symbol is Fan Tachometer Input 1, 0 to +5V Amplitude Fan tachometer Input.

CONFIDENTIAL

Pin(s) No.	Symbol	Attribute	Power	Description
7	**FAN_CTL2**	DOD8	AVCC3	***Fan Control Output 2*** The function of this symbol is Fan Control Output 2. (PWM output signal to Fan's FET.)
	GP51	DIOD8	refer to Table 6-2	***General Purpose I/O 51*** The function of this symbol is General Purpose I/O Port 5 Bit 1.
6	**FAN_TAC2**	DI	AVCC3	***Fan Tachometer Input 2*** The function of this symbol is Fan Tachometer Input 2, 0 to +5V Amplitude Fan Tachometer Input..
	GP52	DIOD8	refer to Table 6-2	***General Purpose I/O 52*** The function of this symbol is General Purpose I/O Port 5 Bit 2.
9	**FAN_CTL3**	DOD8	AVCC3	***Fan Control Output 3*** The function of this symbol is Fan Control Output 3. (PWM output signal to Fan's FET.)
	GP36	DIOD8	refer to Table 6-2	***General Purpose I/O 36*** The function of this symbol is General Purpose I/O Port 3 Bit 6.
8	**FAN_TAC3**	DI	AVCC3	***Fan Tachometer Input 3*** The function of this symbol is Fan Tachometer Input 3, 0 to +5V Amplitude Fan Tachometer Input.
	GP37	DIOD8	refer to Table 6-2	***General Purpose I/O 37*** The function of this symbol is General Purpose I/O Port 3 Bit 7.
128	**FAN_CTL4**	DOD8	AVCC3	***Fan Control Output 4*** The function of this symbol is Fan Control Output 4. (PWM output signal to Fan's FET.)
	PCIRSTIN#	DI	AVCC3	***PCI Reset Input #*** The function of this symbol is the PCI Reset Input #.
	CIRTX2	DO8	AVCC3	***Consumer Infrared Transmit Output 2*** The function of this symbol is Consumer Infrared Transmit Output 2.
	GP15	DIOD8	refer to Table 6-2	***General Purpose I/O 15*** The function of this symbol is General Purpose I/O Port 1 Bit 5.
127	**CIRRX2**	DI	3VSB	***Consumer Infrared Receive Input 2*** The function of this symbol is Consumer Infrared Receive Input 2.
	GP16	DIOD8	refer to Table 6-2	***General Purpose I/O 16*** The function of this symbol is General Purpose I/O Port 1 Bit 6.
	FAN_TAC4	DI	AVCC3	***Fan Tachometer Input 4*** The function of this symbol is Fan Tachometer Input 4, 0 to +5V Amplitude Fan Tachometer Input.
124	**DCD1#**	DI	AVCC3	***Data Carrier Detect 1 #*** When this signal is low, it indicates that the MODEM or data set has detected a carrier. The DCD# signal is a MODEM status input whose condition can be tested by reading the MSR register.
	GP33	DIOD8	refer to Table 6-2	***General Purpose I/O 33*** The function of this symbol is General Purpose I/O Port 3 Bit 3.
	FAN_CTL5	DOD8	AVCC3	***Fan Control Output 5*** The function of this symbol is Fan Control Output 5. (PWM output signal to Fan's FET.)

CONFIDENTIAL

Pin(s) No.	Symbol	Attribute	Power	Description
126	**CTS1#**	DI	AVCC3	***Clear to Send 1 #*** When this signal is low, it indicates that the MODEM or data set is ready to accept data. The CTS# signal is a MODEM status input whose condition can be tested by reading the MSR register.
	GP31	DIOD8	refer to Table 6-2	***General Purpose I/O 31*** The function of this symbol is General Purpose I/O Port 3 Bit 1.
	FAN_TAC5	DI	AVCC3	***FAN Tachometer Input 5*** The function of this symbol is Fan Tachometer Input 5.0 to +5V Amplitude Fan Tachometer Input..
55	**FAN_CTL6**	DOD8	AVCC3	***Fan Control Output 6*** The function of this symbol is Fan Control Output 6. (PWM output signal to Fan's FET.)
	GP90	DIOD8	refer to Table 6-2	***General Purpose I/O 90*** The function of this symbol is General Purpose I/O Port 9 Bit 0.
56	**FAN_TAC6**	DI	AVCC3	***Fan Tachometer Input 6*** The function of this symbol is Fan Tachometer Input 6, 0 to +5V Amplitude Fan Tachometer Input.
	GP91	DIOD8	refer to Table 6-2	***General Purpose I/O 91*** The function of this symbol is General Purpose I/O Port 9 Bit 1.

CONFIDENTIAL

Table 5-9. Pin Description of Keyboard Controller Signals

Pin(s) No.	Symbol	Attribute	Power	Description
77	**KDAT**	DIOD24	3VSB	***Keyboard Data*** The function of this symbol is Keyboard Data.
	GP61	DIOD24	refer to Table 6-2	***General Purpose I/O 61*** The function of this symbol is General Purpose I/O Port 6 Bit 1. This set supports Simple I/O function only. This pin doesn't support internal pull-up.
78	**KCLK**	DIOD24	3VSB	***Keyboard Clock*** The function of this symbol is Keyboard Clock.
	GP60	DIOD24	refer to Table 6-2	***General Purpose I/O 60*** The function of this symbol is General Purpose I/O Port 6 Bit 0. This set supports Simple I/O function only. This pin doesn't support internal pull-up.
79	**GP57**	DIOD24	refer to Table 6-2	***General Purpose I/O 57*** The function of this symbol is General Purpose I/O Port 5 Bit 7.
	MDAT	DIOD24	3VSB	***PS/2 Mouse Data*** The function of this symbol is PS/2 Mouse Data.
80	**GP56**	DIOD24	refer to Table 6-2	***General Purpose I/O 56*** The function of this symbol is General Purpose I/O Port 5 Bit 6.
	MCLK	DIOD24	3VSB	***PS/2 Mouse Clock*** The function of this symbol is PS/2 Mouse Clock.
42	**KRST#**	DO8	AVCC3	***Keyboard Reset #*** The function of this symbol is Keyboard Reset #.
	GP62	DIOD8	refer to Table 6-2	***General Purpose I/O 62*** The function of this symbol is General Purpose I/O Port 6 Bit 2. This set supports Simple I/O function only.
43	**GA20**	DO8	AVCC3	***Gate Address 20***
	GPA4	DIOD8	refer to Table 6-2	***General Purpose I/O A4*** The function of this symbol is General Purpose I/O Port A Bit 4. This set supports Simple I/O function only.

CONFIDENTIAL

Table 5-10. APC Signals

Pin(s) No.	Symbol	Attribute	Power	Description
82	**RSMRST#**	DOD8	3VSB	***Resume Reset #*** The function of this symbol is Resume Reset #. It is a power good signal of SYS_3VSB.
	GP55	DIOD8	refer to Table 6-2	***General Purpose I/O 55*** The function of this symbol is General Purpose I/O Port 5 Bit 5.
63	**SYS_3VSB**	AI	3VSB	***System 3.3V Standby Power Detector*** The function of this symbol is System Standby Power Detector for RSMRST# output and EuP signal Control. Please refer to Table 7-1. Power On Strapping Options on page 39, Figure 7-1. IT8625E EUP Applications Circuitry for Intel ICH on page 40, section 11.14Energy-using Product (EuP) Power Control Signal Timings on page 211 and section 11.16DPWROK and SLP_SUS# Timings for the detail.
69	**PWRON#**	DOD8	3VSB	***Power On Request Output #*** The function of this symbol is Power On Request Output #.
72	**PANSWH#**	DI	3VSB	***Main Power Switch Button Input #*** The function of this symbol is Main Power Switch Button Input #.
73	**PSON#**	DOD8	3VSB	***Power Supply On-Off Output #*** The function of this symbol is Power Supply On-Off Control Output #. This pin is internal pull-up to 3VSB
68	**SUSB#**	DI or DI-L	3VSB	***SUSB # Input*** The function of this symbol is SUSB# Input.
74	**SUSC#**	DI or DI-L	3VSB	***SUSC# Input*** The function of this symbol is SUSC# Input.
	GP53	DIOD8	refer to Table 6-2	***General Purpose I/O 53*** The function of this symbol is General Purpose I/O Port 5 Bit 3.
16	**ATXPG**	DI	AVCC3	***ATX Power Good*** The function of this symbol is ATX Power Good. For PWRGD2/3 signal, it is (AVCC3 power-level-detect **AND** SUSB# **AND**VIN2(+12V_SEN) **AND**VIN3 **AND** ATXPG). Please refer to section 11.12 PWRGD2, PWRGD3 on page 209 for the detail.
	GP30	DIOD8	refer to Table 6-2	***General Purpose I/O 30*** The function of this symbol is General Purpose I/O Port 3 Bit 0.
29	**PCH_PSON#**	DOD8	3VSB	***PCH_PSON# Input*** From PCH, when asserted high, this signal indicates PCH is in the S0ix state.
	GP46	DIOD8	AVCC3	***General Purpose I/O 46*** The function of this symbol is General Purpose I/O Port 4 Bit 6.
15	**PWRGD2**	DOD8	AVCC3	***Power Good Output 2 with 50ms Delay Time*** The function of this symbol is Power Good Output 2. For PWRGD2/3 signal, it is (AVCC3 power-level-detect **AND** SUSB# **AND** VIN2(+12V_SEN) **AND** VIN3 **AND** ATXPG). Please refer to section 11.12 PWRGD2, PWRGD3 on page 209 for the detail.

CONFIDENTIAL

Pin(s) No.	Symbol	Attribute	Power	Description
75	**PWRGD3**	DOD8	AVCC3	***Power Good Output 3 with 150ms Delay Time*** The function of this symbol is Power Good Output 3. For PWRGD2/3 signal, it is (AVCC3 power-level-detect **AND** SUSB# **AND** VIN2(+12V_SEN) **AND** VIN3 **AND** ATXPG). Please refer to section 11.12 PWRGD2, PWRGD3 on page 209 for the detail.
	SDA0	DIOD8	AVCC3	***SMBUS Slave 0 - Data Pin*** The function of this symbol is data pin of SMBUS slave set 0. Please refer to section 8.7.11 for the detail.

CONFIDENTIAL

Table 5-11. Pin Description of Infrared Port Signals

Pin(s) No.	Symbol	Attribute	Power	Description
81	**PCIRST3#**	DOD8	AVCC3	***PCI Reset 3 #*** The function of this symbol is PCI Reset 3 #, which is a buffer of LRESET#.
	CIRRX1	DI	3VSB	***Consumer Infrared Receive Input 1*** The function of this symbol is Consumer Infrared Transmit Input 1.
	GP10	DIOD8	refer to Table 6-2	***General Purpose I/O 10*** The function of this symbol is General Purpose I/O Port 1 Bit 0.
27	**CIRTX1**	DO8	AVCC3	***Consumer Infrared Transmit Output 1*** The function of this symbol is Consumer Infrared Transmit Output 1.
	FAN_PWREN _S0ix	DIOD8	3VSB	***FAN Power Enable in S0ix*** The function of this symbol is FAN Power Output in S0ix Mode.
127	**CIRRX2**	DI	3VSB	***Consumer Infrared Receive Input 2*** The function of this symbol is Consumer Infrared Receive Input 2.
	GP16	DIOD8	refer to Table 6-2	***General Purpose I/O 16*** The function of this symbol is General Purpose I/O Port 1 Bit 6.
	FAN_TAC4	DI	AVCC3	***Fan Tachometer Input 4*** The function of this symbol is Fan Tachometer Input 4, 0 to +5V Amplitude Fan Tachometer Input.
128	**FAN_CTL4**	DOD8	AVCC3	***Fan Control Output 4*** The function of this symbol is Fan Control Output 4. (PWM output signal to Fan's FET.)
	PCIRSTIN#	DI	AVCC3	***PCI Reset Input #*** The function of this symbol is the PCI Reset Input #.
	CIRTX2	DO8	AVCC3	***Consumer Infrared Transmit Output 2*** The function of this symbol is Consumer Infrared Transmit Output 2.
	GP15	DIOD8	refer to Table 6-2	***General Purpose I/O 15*** The function of this symbol is General Purpose I/O Port 1 Bit 5.

CONFIDENTIAL

Table 5-12. Pin Description of PECI Controller Signals

Pin(s) No.	Symbol	Attribute	Power	Description
51	**SB-TSI_D**	DIOD24	AVCC3	***SB-TSI I/F Data Pin*** The function of this symbol isSB-TSI I/F Data.
	PCH_D1	DIOD24	AVCC3	***PCH SM-Link Set 1 Data Pin*** The function of this symbol is PCH SM-Link Data.
	GP43	DIOD24	refer to Table 6-2	***General Purpose I/O 43*** The function of this symbol is General Purpose I/O Port4 Bit 3.
53	**PECI**	PECI	AVCC3	***PECI (for 1.05V I/F)*** The function of this symbol is PECI. Specifically when External Thermal Sensor Host (PECI, SB-TSI, PCH SM-Link) is enabled (bit 6-4 of EC Index 0Ah), this pin is selected as PECI or ETS_CLK.
	SB-TSI_C1	DIOD24	AVCC3	***SB-TSI I/F Clock Pin*** The function of this symbol is AMD SB-TSI I/F Clock. When PECI and SB-TSI functions are used simultaneously, the clock pin of SB-TSI's I/F is SB-TSI_C2.
	GP44	DIOD24	refer to Table 6-2	***General Purpose I/O 44*** The function of this symbol is General Purpose I/O Port4 Bit 4.

Table 5-13. Pin Description of PCH & SMBUS_Slave I/F

Pin(s) No.	Symbol	Attribute	Power	Description
30	**PCIRST1#**	DO8	AVCC3	***PCI Reset 1 #*** The function of this symbol is PCI Reset 1 #, which is a buffer of LRESET#.
	PCH_C0A	DIOD8	AVCC3	***PCH SM-Link Set 0 Clock Pin 0A*** The function of this symbol is PCH SM-Link Clock.
	GP12	DIOD8	refer to Table 6-2	***General Purpose I/O 12*** The function of this symbol is General Purpose I/O Port 1 Bit2.
118	**GP42**	DIOD8	refer to Table 6-2	***General Purpose I/O 42*** The function of this symbol is General Purpose I/O Port 4 Bit 2.
	PCH_C0B	DIOD8	AVCC3	***PCH SM-Link Set 0 Clock Pin 0B*** The function of this symbol is PCH SM-Link Clock.
	S0_IDLE#	DIOD8	3VSB	***S0_IDLE# Signal*** The function of this symbol is S0 idle output. When this signal is low, it indicates PCH is in the S0ix state.
52	**PCH_C1**	DIOD8	AVCC3	***PCH SM-Link Set 1 Clock Pin*** The function of this symbol is PCH SM-Link Clock.
	GPA2	DIOD8	refer to Table 6-2	***General Purpose I/O A2*** The function of this symbol is General Purpose I/O Port A Bit 2.
120	**DSR1#**	DI	AVCC3	***Data Set Ready1 #*** When this signal is low, it indicates that the MODEM or data set is ready to establish a communications link. The DSR# signal is a MODEM status input whose condition can be tested by reading the MSR register.
	GP45	DIOD8	refer to Table 6-2	***General Purpose I/O 45*** The function of this symbol is General Purpose I/O Port 4 Bit 5.

CONFIDENTIAL

Pin(s) No.	Symbol	Attribute	Power	Description
	PCH_D0A	DOD8	AVCC3	***PCH SM-Link Set 0 Data Pin 0A*** The function of this symbol is PCH SM-Link Data.
22	**THERMTRIP#**	DI	AVCC3	***THERMTRIP# Input*** The function of this symbol is for the connection to the Apollo Lake THERMTRIP# pin.
	PCH_D0B	DOD8	AVCC3	***PCH SM-Link Set 0 Data Pin 0B*** The function of this symbol is PCH SM-Link Data.
	GP22	DIOD8	refer to Table 6-2	***General Purpose I/O 22*** The function of this symbol is General Purpose I/O Port 2 Bit 2.
75	**PWRGD3**	DOD8	AVCC3	***Power Good Output 3 with 150ms Delay Time*** The function of this symbol is Power Good Output 3. For PWRGD1/2/3 signal, it is (AVCC3 power-level-detect **AND** SUSB# **AND**VIN2(+12V_SEN) **AND** VIN3 AND ATXPG). Please refer to section 11.12 PWRGD2, PWRGD3 on page 209 for the detail.
	SDA0	DIOD8	AVCC3	***SMBUS Slave 0 - Data Pin*** The function of this symbol isdata pin of SMBUS slave set 0. Please refer to section 8.7.11 for the detail.
76	**3VSBSW#**	DO8	3VSB	***3VSBSW#*** The function of this symbol is 3VSBSW#.
	GP40	DIOD8	refer to Table 6-2	***General Purpose I/O 40*** The function of this symbol is General Purpose I/O Port 4 Bit 0.
	SCL0	DIOD8	AVCC3	***SMBUS Slave 0 - Clock Pin*** The function of this symbol is clock pin of SMBUS slave set 0. Please refer to section 8.7.11 for the detail.
115	**GP67**	DIOD8	refer to Table 6-2	***General Purpose I/O 67*** The function of this symbol is General Purpose I/O Port 6 Bit 7.
	SDA1	DIOD8	AVCC3	***SMBUS Slave 1 - Data Pin*** The function of this symbol is data pin of SMBUS slave set 0. Please refer to section 8.7.11 for the detail.
116	**GP66**	DIOD8	refer to Table 6-2	***General Purpose I/O 66*** The function of this symbol is General Purpose I/O Port 6 Bit 6.
	SCL1	DIOD8	AVCC3	***SMBUS Slave 1 - Clock Pin*** The function of this symbol is clock pin of SMBUS slave set 0. Please refer to section 8.7.11 for the detail.

*Note1: Please refer to Table 6-2. GPIO Registers and Power Pads Table

Table 5-14. Pin Description of Miscellaneous Signals

Pin(s) No.	Symbol	Attribute	Power	Description
48	**CLKIN_L**	DI	AVCC3	***24 or 48 MHz Clock Input***
	GPA7	DOD8	AVCC3	***General Purpose I/O A7*** The function of this symbol is General Purpose I/O Port A Bit 7.
3	**SLP_SUS#**	DI	3VSB	***Deep Sleep Indication*** From CPT PCH, when asserted low, this signal indicates PCH is in the deep sleep state.

CONFIDENTIAL

Pin(s) No.	Symbol	Attribute	Power	Description
	GP63	DIOD8	refer to Table 6-2	***General Purpose I/O 63*** The function of this symbol is General Purpose I/O Port 6 Bit 3.
118	**GP42**	DIOD8	refer to Table 6-2	***General Purpose I/O 42*** The function of this symbol is General Purpose I/O Port 4 Bit 2.
	PCH_C0B	DIOD8	AVCC3	***PCH SM-Link Set 0 Clock Pin 0B*** The function of this symbol is PCH SM-Link Clock.
	S0_IDLE#	DIOD8	3VSB	***S0_IDLE# Signal*** The function of this symbol is S0 idle output. When this signal is low, it indicates PCH is in the S0ix state.
21	**DPWROK**	DOD8	3VSB	***3VSB Power OK Output*** The function of this symbol is 3VSB Power OK Output.
	GP23	DIOD8	refer to Table 6-2	***General Purpose I/O 23*** The function of this symbol is General Purpose I/O Port 2 Bit 3.
30	**PCIRST1#**	DO8	AVCC3	***PCI Reset 1 #*** The function of this symbol is PCI Reset 1 #, which is a buffer of LRESET# / PCIRSTIN#.
	PCH_C0A	DIOD8	AVCC3	***PCH SM-Link Set 0 Clock Pin 0A*** The function of this symbol is PCH SM-Link Clock.
	GP12	DIOD8	refer to Table 6-2	***General Purpose I/O 12*** The function of this symbol is General Purpose I/O Port 1 Bit 2.
31	**PCIRST2#**	DO8	AVCC3	***PCI Reset 2 #*** The function of this symbol is PCI Reset 2 #, which is a buffer of LRESET# / PCIRSTIN#.
	GP11	DIOD8	refer to Table 6-2	***General Purpose I/O 11*** The function of this symbol is General Purpose I/O Port 1 Bit 1.
81	**PCIRST3#**	DOD8	AVCC3	***PCI Reset 3 #*** The function of this symbol is PCI Reset 3 #, which is a buffer of LRESET# / PCIRSTIN#.
	CIRRX1	DI	3VSB	***Consumer Infrared Receive Input 1*** The function of this symbol is Consumer Infrared Transmit Input 1.
	GP10	DIOD8	refer to Table 6-2	***General Purpose I/O 10*** The function of this symbol is General Purpose I/O Port 1 Bit 0.
14	**5VAUX_SW**	DOD8	3VSB	***5VAUX Power Switch Control*** It is the inverse of 3VSBSW# and can be used as active control for the register at S5 and S3 stage. Please refer to section 11.155VAUX_SW Power Control on page 212 for the detail.
13	**5VSB_CTRL#**	DOD8	3VSB	***5VSB_CTRL# Power Control Signal*** Please refer to section 11.14Energy-using Product (EuP) Power Control Signal Timings on page 211 for the detail.
	GP13	DIOD8	refer to Table 6-2	***General Purpose I/O 13*** The function of this symbol is General Purpose I/O Port 1 Bit 3.
11	**RSTCONIN**	DI	3VSB	***Reset Connect Input*** The function of this symbol is Reset Connect Input.
	GP34	DIOD8	refer to Table 6-2	***General Purpose I/O 34*** The function of this symbol is General Purpose I/O Port3 Bit 4.

CONFIDENTIAL

Pin(s) No.	Symbol	Attribute	Power	Description
10	**RSTCONOUT**	DOD8	3VSB	***Reset Connect Output*** The function of this symbol is Reset Connect Output with de-bounced.
	GP35	DIOD8	refer to Table 6-2	***General Purpose I/O 35*** The function of this symbol is General Purpose I/O Port3 Bit 5.
2	**GP64**	DIOD8	refer to Table 6-2	***General Purpose I/O 64*** The function of this symbol is General Purpose I/O Port 6 Bit 4.
22	**PCH_D0B**	DOD8	AVCC3	***PCH SM-Link Set 0 Data Pin 0B*** The function of this symbol is PCH SM-Link Data.
	GP22	DO8	refer to Table 6-2	***General Purpose I/O Output 22*** The function of this symbol is General Purpose I/O Port 2 Bit 2.
67	**WUE#**	DI	VBAT	***Wake Up Enable***
	GP47	DIOD8	refer to Table 6-2	***General Purpose I/O 47*** The function of this symbol is General Purpose I/O Port4 Bit 7.
46	**GPOA0**	DIOD24	refer to Table 6-2	***General Purpose OutputA0*** The function of this symbol is General Purpose I/O Port A Bit 0.
	JP2	DI	AVCC3	***Power-On Strapping 2*** For the power-on strapping option, please refer to Table 7-1. Power On Strapping Options on page 39.
50	**PROCHOT#**	DI/ DIOD8	AVCC3	***Processor Hot# Signal Input/Output***
	GPA1	DIOD24	refer to Table 6-2	***General Purpose I/OA1*** The function of this symbol is General Purpose I/O Port A Bit 1.
52	**PCH_C1**	DIOD8	AVCC3	***PCH SM-Link Set 1 Clock Pin*** The function of this symbol is PCH SM-Link Clock.
	GPA2	DIOD8	refer to Table 6-2	***General Purpose I/OA2*** The function of this symbol is General Purpose I/O Port A Bit 2.
54	**SB-TSI_C2**	DIOD24	AVCC3	***SB-TSI I/F Clock Pin 2*** The function of this symbol is AMD SB-TSI I/F Clock. When PECI and SB-TSI functions are used simultaneously, the clock pin of SB-TSI's I/F is SB-TSI_C2.
	GPA3	DIOD24	refer to Table 6-2	***General Purpose I/OA3*** The function of this symbol is General Purpose I/O Port A Bit 3.
55	**FAN_CTL6**	DOD8	AVCC3	***Fan Control Output 6*** The function of this symbol is Fan Control Output 6. (PWM output signal to Fan's FET.)
	GP90	DIOD8	refer to Table 6-2	***General Purpose I/O 90*** The function of this symbol is General Purpose I/O Port 9 Bit 0.
	JP7	DI	3VSB	***Power-On Strapping 7*** For the power-on strapping option, please refer to Table 7-1. Power On Strapping Options on page 39.
56	**FAN_TAC6**	DI	AVCC3	***Fan Tachometer Input 6*** The function of this symbol is Fan Tachometer Input 6, 0 to +5V Amplitude Fan Tachometer Input.
	GP91	DIOD8	refer to Table 6-2	***General Purpose I/O 91*** The function of this symbol is General Purpose I/O Port 9 Bit 1.

CONFIDENTIAL

Pin(s) No.	Symbol	Attribute	Power	Description
57	**GP92**	DIOD8	refer to Table 6-2	***General Purpose I/O 92*** The function of this symbol is General Purpose I/O Port 9 Bit 2.
	PCH_VRMPWRGD	DI	3VSB	***PCH Voltage Regular Module Power Good*** The function of this symbol is PCH_VRMPWRGD Input.
58	**GP93**	DIOD8	refer to Table 6-2	***General Purpose I/O 93*** The function of this symbol is General Purpose I/O Port 9 Bit 3.
	PCH_VRMPWRGD_S0ix	DIOD8	3VSB	***PCH VRM Power Good S0ix*** The function of this symbol is PCH_VRMPWRGD_S0ix Output.
59	**GP94**	DIOD8	refer to Table 6-2	***General Purpose I/O 94*** The function of this symbol is General Purpose I/O Port 9 Bit 4.
	PCH_VRMPWREN	DI	3VSB	***PCH Voltage Regular Module Power Enable*** The function of this symbol is PCH_VRMPWREN Input.
60	**GP95**	DIOD8	refer to Table 6-2	***General Purpose I/O 95*** The function of this symbol is General Purpose I/O Port 9 Bit 5.
	PCH_VRMPWREN_S0ix	DIOD8	3VSB	***PCH Voltage Regular Module Power Enable S0ix*** The function of this symbol is PCH_ VRMPWREN_S0ix Output.
61	**VPP_EN**	DIOD8	3VSB	***VPP Enable Output*** SDRAM activating power supply enable output.
	GP96	DIOD8	refer to Table 6-2	***General Purpose I/O 96*** The function of this symbol is General Purpose I/O Port 9 Bit 6.
62	**VDD_EN**	DIOD8	3VSB	***VDD Enable Output*** SDRAM output buffers power supply enable output.
	GP97	DIOD8	refer to Table 6-2	***General Purpose I/O 97*** The function of this symbol is General Purpose I/O Port 9 Bit 7.

IO Cell:
DO8: 8mA Digital Output buffer
DOD8: 8mA Digital Open-Drain Output buffer
DO16: 16mA Digital Output buffer
DO24: 24mA Digital Output buffer
DO24L: 24mA sink/8mA drive Digital Output buffer

DIO8: 8mA Digital Input/Output buffer
DIOD8: 8mA Digital Open-Drain Input/Output buffer
DIOD8-L: 8mA Digital Open-Drain Input/Output buffer for 1.8V I/F
DIO16: 16mA Digital Input/Output buffer
DIOD16: 16mA Digital Open-Drain Input/Output buffer
DIO24: 24mA Digital Input/Output buffer
DIOD24: 24mA Digital Open-Drain Input/Output buffer

DI: Digital Input
DI-L: Digital Input for 1.8V I/F
AI: Analog Input
AO: Analog Output

PECI: Special design for PECI interface

CONFIDENTIAL

IO_SW: Special type of Input/Output;pinsof this type connected in pairs through a switch

CONFIDENTIAL

6. List of GPIO Pins

Table 6-1. GPIO Alternate Function

Group	Bit	1st Func	Conditions	2nd Func	Conditions	3rd Func	Conditions	4th Func	Conditions
GPIO 1x	0	PCIRST3# (DOD8)	LDN7\25h[0]=0	CIRRX1 (DI)	LDN7\25h[0]=1 LDN0Ah=30h=01h LDN7\C0h[0]=0 LDN7\C8h[0]=0	GP10 (DIOD8)	LDN7\25h[0]=1		
	1	PCIRST2# (DO8)	LDN7\25h[1]=0	GP11 (DIOD8)	LDN7\25h[1]=1				
	2	PCIRST1# (DO8)	LDN7\25h[2]=0	PCH_C0A (DIOD8)	LDN7\2Ah[6]=1	GP12 (DIOD8)	LDN7\25h[2]=1		
	3	5VSB_CTRL# (DOD8)	LDN4\FAh[1]=1	GP13 (DIOD8)	LDN7\25h[3]=1				
	4	CHARGP14 (DIOD8)	GBL\24h[0]=0	GP14 (DIOD8)	LDN7\25h[4]=1				
	5	FAN_CTL4	LDN7\25h[4]=0	PCIRSTIN# (DI)	LDN7\2Ch[2]=1	CIRTX2 (DO8)	CIR IER[7]=1	GP15 (DIOD8)	LDN7\25h[5]=1
	6	CIRRX2 (DI)	CIR IER[6]=1	GP16 (DIOD8)	LDN7\25h[6]=1	FAN_TAC4	LDN7\25h[6]=0		
	7	RI2# (DI)	LDN2 enable	GP17 (DIOD8)	LDN7\25h[7]=1				
GPIO 2x	0	CTS2# (DI)	LDN7\26h[0]=0 LDN2 enable	GP20 (DIOD8)	LDN7\26h[0]=1				
	1	DCD2# (DI)	LDN7\26h[1]=0 LDN2 enable	GP21 (DIOD8)	LDN7\26h[1]=1				
	2	PCH_D0B (DIOD8)	GBL\2Bh[5]=0	GP22 (DIOD8)	LDN7\26h[2]=1				
	3	DPWROK (DIOD8)	LDN7\26h[3]=0	GP23 (DIOD8)	LDN7\26h[3]=1				
	4	GP24 (DIOD8)	LDN7\26h[4]=1	RTS2# (DO8)	LDN7\26h[4]=0 LDN2 enable				
	5	DSR2# (DI)	LDN7\26h[5]=0 LDN2 enable	GP25 (DIOD8)	LDN7\26h[5]=1				
	6	SOUT2# (DO8)	LDN7\26h[6]=0 LDN2 enable	GP26 (DIOD8)	LDN7\26h[6]=1				
	7	SIN2# (DI)	LDN7\26h[7]=0 LDN2 enable	GP27 (DIOD8)	LDN7\26h[7]=1				

CONFIDENTIAL

Group	Bit	1st Func	Conditions	2nd Func	Conditions	3rd Func	Conditions	4th Func	Conditions
GPIO 3x	0	ATXPG (DI)	LDN7\27h[0]=0	GP30 (DIOD8)	LDN7\27h[0]=1				
	1	CTS1# (DI)	LDN7\27h[1]=0 LDN7\2Dh[1]=1 LDN1\30h=01h	GP31 (DIOD8)	LDN7\27h[1]=1	FAN_TAC5	LDN7\27h[1]=0 LDN7\2Dh[1]=0 LDN1\30h=00h		
	2	RI1# (DI)	LDN7\27h[2]=0 LDN1\30h=01h	GP32 (DIOD8)	LDN7\27h[2]=1				
	3	DCD# (DI)	LDN7\27h[3]=0 LDN1\30h=01h	GP33 (DIOD8)	LDN7\27h[3]=1	FAN_CTL5	LDN7\27h[3]=0 LDN1\30h=00h		
	4	RSTCONIN (DI)	LDN7\27h[4]=0	GP34 (DIOD8)	LDN7\27h[4]=1				
	5	RSTCONOUT (DOD8)	LDN7\27h[5]=0	GP35 (DIOD8)	LDN7\27h[5]=1				
	6	FAN_CTL3 (DOD8)	LDN7\27h[6]=0	GP36 (DIOD8)	LDN7\27h[6]=1				
	7	FAN_TAC3 (DI)	LDN7\27h[7]=0	GP37 (DIOD8)	LDN7\27h[7]=1				
GPIO 4x	0	3VSBSW# DUALSW_P (DO8)	LDN7\2Ah[7]=1 LDN7\28h[0]=0	GP40 (DIOD8)	LDN7\28h[0]=1	SCL0 (DIOD8)	LDN4\F3h[1]=1		
	1	SIN1 (DI)	LDN7\28h[1]=0 LDN1\30h=01h	GP41 (DIOD8)	LDN7\28h[1]=1				
	2	PCH_C1a (DIOD8)	PCH Enable LDN7\2Ah[2]=0	GP42 (DIOD8)	LDN7\28h[2]=1	S0_IDLE#	LDN7\2Dh[2]=1		
	3	PCH_D1	LDN7\2Ah[3]=1	GP43 (DIOD8)	LDN7\28h[3]=1				
	4	Ext. Sensor	EC _0Ah[6-4]			GP44 (DIOD8)	LDN7\28h[4]=1		
	5	DSR1# (DI)	LDN1\30h=01h	GP45 (DIOD8)	LDN7\28h[5]=1	PCH_D0A	GBL\2Bh[5]=1		
	6	PCH_PSON#	LDN7\2Dh[2]=1	GP46	LDN7\28h<6>=1				
	7	WUE#GP47 DIOD8	LDN4\F0h[1]=1	GP47 DIOD8	LDN7\28h[7]=1				

CONFIDENTIAL

Group	Bit	1st Func	Conditions	2nd Func	Conditions	3rd Func	Conditions	4th Func	Conditions
GPIO 5x	0	GP50 (DOD8)	LDN7\29h[0]=1	CLKRUN#	LDN7\29h[0]=0				
	1	FAN_CTL2 (DOD8)	LDN7\29h[1]=0	GP51 (DIOD8)	LDN7\29h[1]=1				
	2	FAN_TAC2 (DI)	LDN7\29h[2]=0	GP52 (DIOD8)	LDN7\29h[2]=1				
	3	SUSC# (DI)	LDN7\29h[3]=0	GP53 (DIOD8)	LDN7\29h[3]=1				
	4	SLP_S0#	LDN7\2Dh[2]=1	PME# (DOD8)	LDN7\29h[4]=0	GP54 (DIOD8)	LDN7\29h[4]=1		
	5	RSMRST# (DOD8)	LDN7\29h[5]=0	GP55 (DIOD8)	LDN7\29h[5]=1				
	6	GP56 (DIOD24)	LDN7\29h[7]=1	MCLK (DIOD24)	LDN7\29h[7]=0				
	7	GP57 (DIOD24)	LDN7\29h[7]=1	MDAT (DIOD24)	LDN7\29h[7]=0				
GPIO 6x	0	KCLK (DIOD24)	LDN7\29h[6]=0	GP60 (DIOD24)	LDN7\29h[6]=1				
	1	KDAT (DIOD24)	LDN7\29h[6]=0	GP61 (DIOD24)	LDN7\29h[6]=1				
	2	KRST# (DO8)	LDN7\29h[6]=0	GP62 (DIOD16)	LDN7\29h[6]=1				
	3	SLP_SUS# (DI)	LDN7\E7h[4]=0	PCH_C1b	LDN7\2Ah[2]=0 LDN7\2Ah[6]=1	GP63 (DIOD8)	LDN7\2Dh[3]=1		
	4	GP64 (DIOD8)	LDN7\2Dh[4]=1						
	5	GP65 (DOD8)	LDN7\2Dh[5]=1						
	6	GP66 (DIOD8)	LDN7\2Dh[6]=1	SCL1 (DIOD8)	LDN4\F3h[2]=1				
	7	GP67 (DIOD8)	LDN7\2Dh[7]=1	SDA1 (DIOD8)	LDN4\F3h[2]=1				

CONFIDENTIAL

Group	Bit	1st Func	Conditions	2nd Func	Conditions	3rd Func	Conditions	4th Func	Conditions
GPIO 7x	0	P80LED0 (DO)	LDN3\30h=00h F0h[3]=0b	PD0 (DIO24)	LDN3\30h=01h LDN3\F0h[3]=1b	GP70 (DIOD24)	LDN3\30h=00h		
	1	P80LED1 (DO)	LDN3\30h=00h F0h[3]=0b	PD1 (DIO24)	LDN3\30h=01h LDN3\F0h[3]=1b	GP71 (DIOD24)	LDN3\30h=00h		
	2	P80LED2 (DO)	LDN3\30h=00h F0h[3]=0b	PD2 (DIO24)	LDN3\30h=01h LDN3\F0h[3]=1b	GP72 (DIOD24)	LDN3\30h=00h		
	3	P80LED3 (DO)	LDN3\30h=00h F0h[3]=0b	PD3 (DIO24)	LDN3\30h=01h LDN3\F0h[3]=1b	GP73 (DIOD24)	LDN3\30h=00h		
	4	P80LED4 (DO)	LDN3\30h=00h F0h[3]=0b	PD4 (DIO24)	LDN3\30h=01h LDN3\F0h[3]=1b	GP74 (DIOD24)	LDN3\30h=00h		
	5	P80LED5 (DO)	LDN3\30h=00h F0h[3]=0b	PD5 (DIO24)	LDN3\30h=01h LDN3\F0h[3]=1b	GP75 (DIOD24)	LDN3\30h=00h		
	6	P80LED6 (DO)	LDN3\30h=00h F0h[3]=0b	PD6 (DIO24)	LDN3\30h=01h LDN3\F0h[3]=1b	GP76 (DIOD24)	LDN3\30h=00h		
	7	DIG0 (DOD24)	LDN3\30h=00h LDN3\F0h[3]=0b	PD7 (DIO24)	LDN3\30h=01h LDN3\F0h[3]=1b	GP77 (DIOD24)	LDN3\30h=00h LDN3\F0h[3]=1b		
GPIO 8x	0			SLCT# (DI)	LDN3\30h=01h LDN3\F0h[3]=1b	GP80 (DIOD24)	LDN3\30h=00h		
	1			PE# (DI)	LDN3\30h=01h LDN3\F0h[3]=1b	GP81 (DIOD8)	LDN3\30h=00h		
	2	DIG3 (DOD24)	LDN3\30h=00h LDN3\F0h[3]=0b	BUSY# (DI)	LDN3\30h=01h LDN3\F0h[3]=1b	GP82 (DIOD8)	LDN3\30h=00h LDN3\F0h[3]=1b		
	3	DIG2 (DOD24)	LDN3\30h=00h LDN3\F0h[3]=0b	ACK# (DI)	LDN3\30h=01h LDN3\F0h[3]=1b	GP83 (DIOD8)	LDN3\30h=00h LDN3\F0h[3]=1b		
	4	SMBD_R1 (IO_SW)	LDN3\30h=00h	SLIN# (DIO24)	LDN3\30h=01h LDN3\F0h[3]=1b	GP84 (DIOD24)	LDN3\30h=00h LDN7\2Ch[7]=1		
	5	SMBD_M1 (IO_SW)	LDN3\30h=00h	INIT# (DIO24)	LDN3\30h=01h LDN3\F0h[3]=1b	GP85 (DIOD24)	LDN3\30h=00h LDN7\2Ch[7]=1		
	6	SMBC_R1 (IO_SW)	LDN3\30h=00h	AFD# (DIO24)	LDN3\30h=01h LDN3\F0h[3]=1b	GP86 (DIOD24)	LDN3\30h=00h LDN7\2Ch[7]=1		
	7	SMBC_M1 (IO_SW)	LDN3\30h=00h	STB# (DI)	LDN3\30h=01h LDN3\F0h[3]=1b	GP87 (DIOD24)	LDN3\30h=00h LDN7\2Ch[7]=1		

CONFIDENTIAL

Group	Bit	1st Func	Conditions	2nd Func	Conditions	3rd Func	Conditions	4th Func	Conditions
GPIO 9x	0	GP90 (DIOD8)	LDN7\D3h[0]=1	FAN_CTL6 (DOD8)	LDN7\D3h[0]=0				
	1	GP91 (DIOD8)	LDN7\D3h[1]=1	FAN_TAC6 (DOD8)	LDN7\D3h[1]=0				
	2	PCH_VRMPWRGD (DI)	LDN7\D3h[2]=1	GP92 (DIOD8)	LDN7\D3h[2]=1				
	3	PCH_VRMPWRGD S0ix (DIOD8)	LDN7\D3h[3]=1	GP93 (DIOD8)	LDN7\D3h[3]=1				
	4	PCH_VRMPWREN (DI)	LDN7\D3h[4]=1	GP94 (DIOD8)	LDN7\D3h[4]=1				
	5	PCH_VRMPWREN_ S0ix (DIOD8)	LDN7\D3h[5]=1	GP95 (DIOD8)	LDN7\D3h[5]=1				
	6	VPP_EN (DIOD8)	JP7=0 LDN7\D3h[6]=0	GP96 (DIOD8)	LDN7\D3h[6]=1				
	7	VDD_EN (DIOD8)	JP7=0 LDN7\D3h[7]=0	GP97 (DIOD8)	LDN7\D3h[7]=1				
GPIO Ax	0	GPOA0 (DO8)	LDN7\D8h[0]=1						
	1	GPA1 (DIOD8)	LDN7\D8h[1]=1						
	2	PCH_C1	LDN7\2Ah[2]=1	GPA2 (DIOD8)	LDN7\D8h[2]=1				
	3	Ext. Sensor	EC 0Ah[6-4]	GPA3 (DIOD8)	LDN7\D8h[3]=1				
	4	ESPI_RESET# (DI)	JP6=0 (eSPI mode)	GA20	JP6=1 (LPC mode)	GPA4 (DIOD8)	JP6=1 (LPC mode) LDN7\D8h[4]=1		
	5	ESPI_ALERT#	JP6=0 (eSPI mode) (For discrete Alert# pin application)	SERIRQ#	JP6=1 (LPC mode)	GPA5 (DIOD8)	LDN7\D8h[5]=1		
	6	LDRQ#	JP6=1	GPA6 (DIOD8)	LDN7\D8h[6]=1				
	7	CLKIN_L	JP6=1	GPA7 (DIOD8)	LDN7\D8h[7]=1				

CONFIDENTIAL

Table 6-2. GPIO Registers and Power Pads Table

S: Register kept by 3VSB
- : Register kept by AVCC3
X: Not supported by this chip
O: GPIO control in S3/S5 supported

GP I/O Group 1		GPIO10	GPIO11	GPIO12	GPIO13	GPIO14	GPIO15	GPIO16	GPIO17
GPIO Control in S3/S5		O	X	X	X	X	X	X	X
Multi-pin selection	(Index 25h)	S	-	-	-	S	-	-	-
Pin polarity	(Index B0h)	-	-	-	-	-	-	-	-
Internal pull-up enable	(Index B8h)	S	S	S	S	S	S	S	S
Simple I/O enable	(Index C0h)	S	-	-	-	S	-	-	-
Output/Input selection	(Index C8h)	S	-	-	-	S	-	-	-
GP I/O Group 2		**GPIO20**	**GPIO21**	**GPIO22**	**GPIO23**	**GPIO24**	**GPIO25**	**GPIO26**	**GPIO27**
GPIO Control in S3/S5		O	O	O	O	O	O	O	O
Multi-pin selection	(Index 26h)	S	S	S	S	S	S	S	S
Pin polarity	(Index B1h)	S	S	S	S	S	S	S	S
Internal pull-up enable	(Index B9h)	X	X	X	X	X	X	X	X
Simple I/O enable	(Index C1h)	S	S	S	S	S	S	S	S
Output/Input selection	(Index C9h)	S	S	S	S	S	S	S	S
GP I/O Group 3		**GPIO30**	**GPIO31**	**GPIO32**	**GPIO33**	**GPIO34**	**GPIO35**	**GPIO36**	**GPIO37**
GPIO Control in S3/S5		X	X	X	X	X	X	X	X
Multi-pin selection	(Index 27h)	S	S	S	S	S	S	S	S
Pin polarity	(Index B2h)	-	-	-	-	-	-	-	-
Internal pull-up enable	(Index BAh)	-	-	-	-	-	-	-	-
Simple I/O enable	(Index C2h)	-	-	-	-	-	-	-	-
Output/Input selection	(Index CAh)	-	-	-	-	-	-	-	-
GP I/O Group 4		**GPIO40**	**GPIO41**	**GPIO42**	**GPIO43**	**GPIO44**	**GPIO45**	**GPIO46**	**GPIO47**
GPIO Control in S3/S5		O	O	O	O	O	O	O	X
Multi-pin selection	(Index 28h)	S	S	S	S	S	S	O	-
Pin polarity	(Index B3h)	-	-	-	-	-	-	X	-
Internal pull-up enable	(Index BBh)	-	-	-	X	-	-	X	-
Simple I/O enable	(Index C3h)	S	S	S	S	S	S	O	-
Output/Input selection	(Index CBh)	S	S	S	S	S	S	O	-
GP I/O Group 5		**GPIO50**	**GPIO51**	**GPIO52**	**GPIO53**	**GPIO54**	**GPIO55**	**GPIO56**	**GPIO57**
GPIO Control in S3/S5		X	X	X	O	O	O	X	X
Multi-pin selection	(Index 29h)	S	-	-	S	S	S	S	S
Pin polarity	(Index B4h)	-	-	-	-	-	-	-	-
Internal pull-up enable	(Index BCh)	X	S	S	X	X	S	S	S
Simple I/O enable	(Index C4h)	-	-	-	S	S	S	-	-
Output/Input selection	(Index CCh)	-	-	-	S	S	S	-	-
GP I/O Group 6		**GPIO60**	**GPIO61**	**GPIO62**	**GPIO63**	**GPIO64**	**GPIO65**	**GPIO66**	**GPIO67**
GPIO Control in S3/S5		X	X	X	X	O	X	O	O
Multi-pin selection-1	(Index 29h)	S *Note1	S*Note1	S*Note1	X	X	X	X	X
Multi-pin selection-2	(Index 2Dh)	X	X	X	-	-	-	S	-
Pin polarity*Note4	(Index B5h)	-	-	-	S	S	S	S	S
Internal pull-up enable	(Index BDh)	S	S	X	S	S	S	S	S
Output/Input selection	(Index CDh)	-	-	-	S	S	S	S	S
Note:		*Note 1: GP60~GP62 enabled by index 29h<bit 6>=1 *Note 2: GP63~GP67 enabled by index 2Dh<bit 3-7> *Note 3: The pin polarity is active only when the simple I/O output is enabled.							

CONFIDENTIAL

GP I/O Group 7	GPIO70	GPIO71	GPIO72	GPIO73	GPIO74	GPIO75	GPIO76	GPIO77
GPIO Control in S3/S5	O	O	O	O	O	O	O	O
Output/Input selection (Index CEh)	S	S	S	S	S	S	S	S
Note:	For GP70~GP77 simple IO enable: a. Parallel Port Disable: LDN3\Index30h=00h b. The pin polarity is active only when the simple I/O output is enabled.							

GP I/O Group 8	GPIO80	GPIO81	GPIO82	GPIO83	GPIO84	GPIO85	GPIO86	GPIO87
GPIO Control in S3/S5	O	O	O	O	O	O	O	O
Output/Input selection (Index CFh)	S	S	S	S	S	S	S	S
Note:	For GP80~GP87 simple IO enable: a. Parallel Port Disable: LDN3\Index30h=00h b. SMBUS Isolation Disable: Global Index2Ch<bit 7>=1							

GP I/O Group 9	GPIO90	GPIO91	GPIO92	GPIO93	GPIO94	GPIO95	GPIO96	GPIO97
GPIO Control in S3/S5	O	O	O	O	O	O	O	O
Pin polarity (Index D1h)	S	S	S	S	S	S	S	S
Internal pull-up enable (Index D4h)	X	S	S	S	S	S	S	S
Simple I/O enable (Index D3h)	S	S	S	S	S	S	S	S
Output/Input selection (Index D2h)	S	S	S	S	S	S	S	S
Note:								

GP I/O Group A	GPIOA0	GPIOA1	GPIOA2	GPIOA3	GPIOA4	GPIOA5	GPIOA6	GPIOA7
GPIO Control in S3/S5	X	O	O	O	X	O	O	O
Pin polarity (Index D6h)	S	S	S	S	S	S	S	S
Internal pull-up enable (Index D9h)	X	S	S	S	X	X	X	S
Simple I/O enable (Index D5h)	S	S	S	S	S	S	S	S
Output/Input selection (Index D7h)	S	S	S	S	S	S	S	S
Note:								

CONFIDENTIAL

This page is intentionally left blank.

CONFIDENTIAL

7. Power On Strapping Options and Special Pin Routings

Table 7-1. Power On Strapping Options

	Symbol	Strapping Event	Value	Description
JP2 Pin 46	WDT_EN	Internal VCC-OK/ LRESET#	1	Disable WDT to rest PWROK
			0	Enable WDT to rest PWROK
JP3 Pin 121	Vih/Vil_SEL	Internal 3VSB_OK	1	3.3V Not Bay-Trail Platform*Note2
			0	1.8V Bay-Trail Platform*Note1
JP4 Pin 123	SLP_SUS#_EN	Internal 3VSB_OK	1	Disable SLP_SUS# function
			0	Enable SLP_SUS# function
JP5 Pin 26	UOVMODE_SEL	Internal VCC-OK	1	Notice Type
			0	Reserved
JP6 Pin 119	LPC_eSPI_SEL	Internal 3VSB_OK	1	LPC Mode
			0	eSPI Mode
JP7 Pin 55	DDR4_EN	Internal 3VSB_OK	1	Disable DDR4 power sequence function
			0	Enable DDR4 power sequence function

Note:

1. 1.8V input threshold voltage for SUSB#/SUSC#/LPC/eSPI/SERIRQ#/GP2x signals
2. 3.3V input threshold voltage for SUSB#/SUSC#/LPC/eSPI/SERIRQ#/GP2x signals

CONFIDENTIAL

Figure 7-1. IT8625E EUP Applications Circuitry for Intel ICH

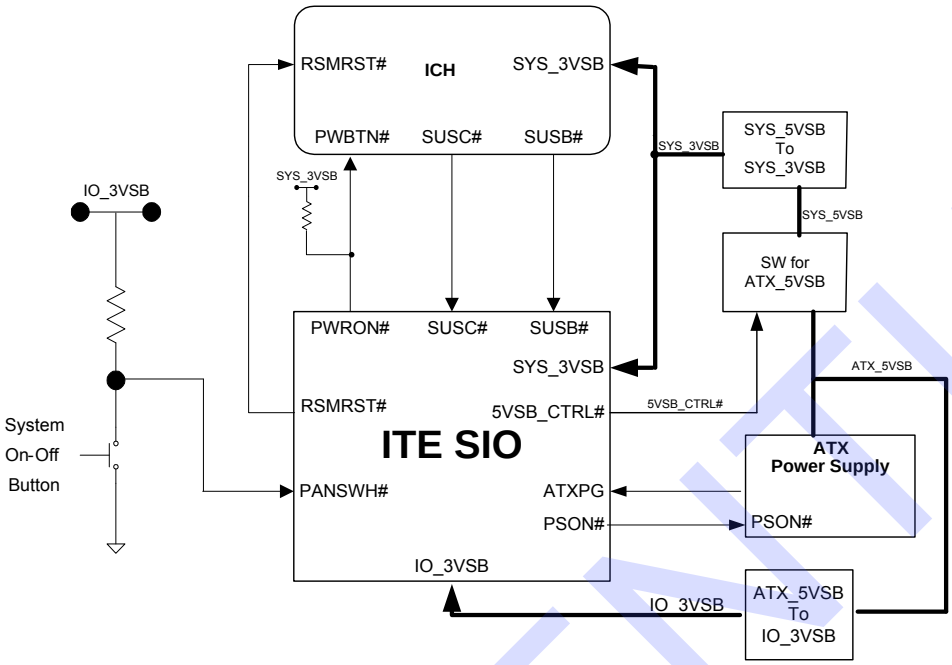

CONFIDENTIAL

8. Configuration

8.1 Configuring Sequence

After hardware reset or power-on reset, the IT8625E enters the normal mode with all logical devices disabled except KBC. The initial state (enable bit) of this logical device (KBC) is ”1”.

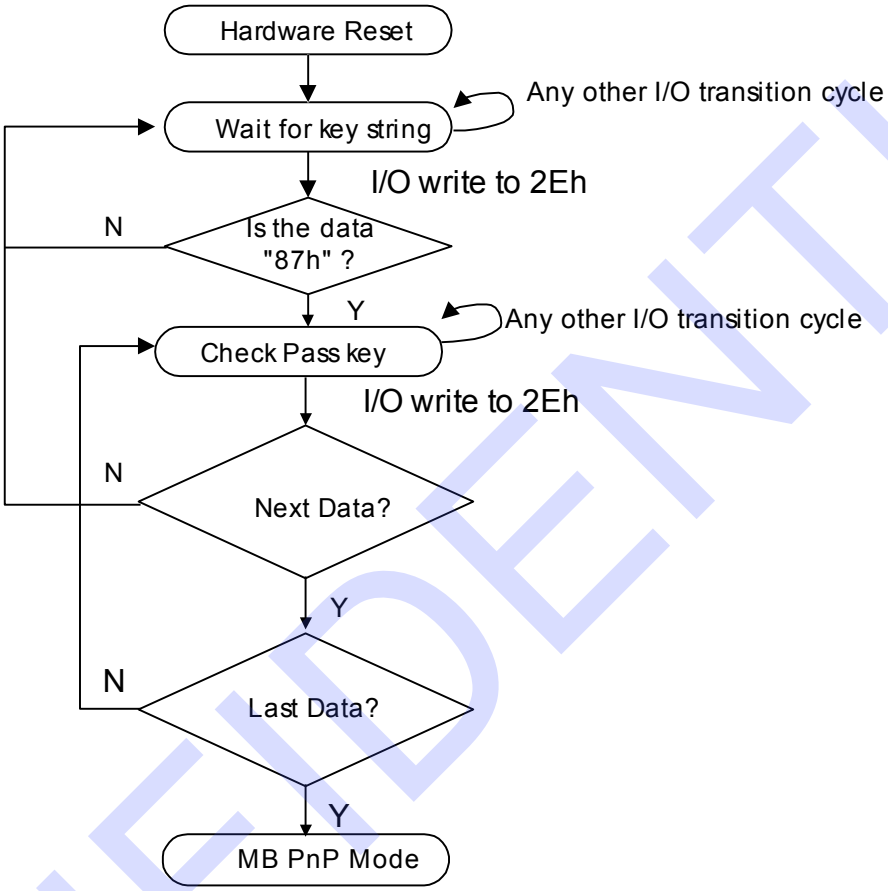

There are three steps below to completing the configuration setup:

(1) Enter MB PnP Mode
(2) Modify data of configuration registers
(3) Exit MB PnP Mode

The undesired result may occur if the MB PnP Mode is not exited properly.

(1) Enter MB PnP Mode

To enter the MB PnP Mode, four special I/O write operations are required to be performed during the Wait for Key state and in order to ensure the initial state of the key-check logic, it is necessary to perform four write operations to the Special Address port (2Eh). Two different enter keys are provided to select configuration ports (2Eh/2Fh or 4Eh/4Fh) of the next step.

		Address Port	Data Port
	87h, 01h, 55h, 55h;	2Eh	2Fh
or	87h, 01h, 55h, AAh;	4Eh	4Fh

CONFIDENTIAL

(2) Modify Data ofConfiguration Registers

All configuration registers can be accessed after entering the MB PnP Mode. Before accessing a selected register, the content of Index 07h must be changed to the LDN to which the register belongs, except some Global registers.

(3) Exit MB PnP Mode

Set bit 1 of the configure control register (Index=02h) to “1” to exit the MB PnP Mode.

CONFIDENTIAL

8.2 Configuration Registers

All registers except APC/PME registers will be reset to the default state when RESET is activated.

Table 8-1. Global Configuration Registers

LDN	Index	R/W	Reset	Configuration Register or Action
All	02h	W	NA	Configure Control
All	07h	R/W	NA	Logical Device Number (LDN)
All	20h	R	86h	Chip ID Byte 1
All	21h	R	25h	Chip ID Byte 2
All	22h	W-R	0Ch	Chip Version
All	23h	R/W	40h	Clock Selection Register
All	24h	R/W	00h	Special Register
07h Note1	25h	R/W	00h	GPIO Set 1 Multi-Function Pin Selection Register Bit 0 powered by 3VSB
07h Note1	26h	R/W	F3h	GPIO Set 2 Multi-Function Pin Selection Register Bit 7-0 powered by 3VSB
07h Note1	27h	R/W	00h	GPIO Set 3 Multi-Function Pin Selection Register
07h Note1	28h	R/W	00h	GPIO Set 4 Multi-Function Pin Selection Register Bit 7-0 powered by 3VSB
07h Note1	29h	R/W	00h	GPIO Set 5 Multi-Function Pin Selection Register Bit 5-3 powered by 3VSB
07h Note1	2Ah	R/W	00h	Special Function Selection Register 1 Bit 7-0 powered by 3VSB
All	2Bh	R/W	48h	Special Function Selection Register 2
07h Note1	2Ch	R/W	01h	Special Function Selection Register 3 Bit 7-0 powered by 3VSB
07h Note1	2Dh	R/W	00h	Special Function Selection Register 4
F4h Note1	2Eh	R/W	00h	Test 1 Register
F4h Note1	2Fh	R/W	00h	Test 2 Register

Note 1: These registers can be read from all LDNs.

CONFIDENTIAL

Table 8-2. Serial Port 1 Configuration Registers

LDN	Index	R/W	Reset	Configuration Register or Action
01h	30h	R/W	00h	Serial Port 1 Activate
01h	60h	R/W	03h	Serial Port 1 Base Address MSB Register
01h	61h	R/W	F8h	Serial Port 1 Base Address LSB Register
01h	70h	R/W	04h	Serial Port 1 Interrupt Level Select
01h	F0h	R/W	00h	Serial Port 1 Special Configuration Register 1
01h	F1h	R/W	50h	Serial Port 1 Special Configuration Register 2

Table 8-3. Serial Port 2 Configuration Registers

LDN	Index	R/W	Reset	Configuration Register or Action
02h	30h	R/W	00h	Serial Port 2 Activate
02h	60h	R/W	02h	Serial Port 2 Base Address MSB Register
02h	61h	R/W	F8h	Serial Port 2 Base Address LSB Register
02h	70h	R/W	03h	Serial Port 2 Interrupt Level Select
02h	F0h	R/W	00h	Serial Port 2 Special Configuration Register 1
02h	F1h	R/W	50h	Serial Port 2 Special Configuration Register 2

Table 8-4. Parallel Port Configuration Registers

LDN	Index	R/W	Reset	Configuration Register or Action
03h	30h	R/W	00h	Parallel Port Activate
03h	60h	R/W	03h	Parallel Port Primary Base Address MSB Register
03h	61h	R/W	78h	Parallel Port Primary Base Address LSB Register
03h	62h	R/W	07h	Parallel Port Secondary Base Address MSB Register
03h	63h	R/W	78h	Parallel Port Secondary Base Address LSB Register
03h	70h	R/W	07h	Parallel Port Interrupt Level Select
03h	74h	R/W	03h	Parallel Port DMA Channel Select [Note2]
03h	F0h	R/W	03h [Note2]	Parallel Port Special Configuration Register

Note 2: When the bit 2 of the Primary Base Address LSB Register of Parallel Port is set to 1, the EPP modecannot be enabled. Bit 0 of this register is always 0.

CONFIDENTIAL

Table 8-5. Environment Controller Configuration Registers

LDN	Index	R/W	Reset	Configuration Register or Action
04h	30h	R/W	00h	Environment Controller Activate
04h	60h	R/W	02h	Environment Controller Base Address MSB Register
04h	61h	R/W	90h	Environment Controller Base Address LSB Register
04h	62h	R/W	02h	PME Direct Access Base Address MSB Register
04h	63h	R/W	30h	PME Direct Access Base Address LSB Register
04h	70h	R/W	09h	Environment Controller Interrupt Level Select
04h	74h	R/W	00h	EC HWM MMIO Register
04h	F0h	R/W	00h	APC/PME Event Enable Register
04h	F1h	R/W	00h	APC/PME Status Register
04h	F2h	R/W	00h	APC/PME Control Register 1
04h	F3h	R/W	00h	Environment Controller Special Configuration Register
04h	F4h	R-R/W	00h	APC/PME Control Register 2
04h	F5h	R/W	-	APC/PME Special Code Index Register
04h	F6h	R/W	-	APC/PME Special Code Data Register
04h	F9h	R/W	-	Over Voltage/Under Voltage Protection (UVP/OVP)
04h	FAh	R/W	-	Special Configuration Register 1
04h	FBh	R/W	-	Special Configuration Register 2
04h	FCh	R/W	-	UVP/OVP Range Selection Register 1
04h	FDh	R/W	-	UVP/OVP Range Selection Register 2

CONFIDENTIAL

Table 8-6. KBC(Keyboard) Configuration Registers

LDN	Index	R/W	Reset	Configuration Register or Action
05h	30h	R/W	01h	KBC(Keyboard) Activate
05h	60h	R/W	00h	KBC(Keyboard) Data Base Address MSB Register
05h	61h	R/W	60h	KBC(Keyboard) Data Base Address LSB Register
05h	62h	R/W	00h	KBC(Keyboard) Command Base Address MSB Register
05h	63h	R/W	64h	KBC(Keyboard) Command Base Address LSB Register
05h	70h	R/W	01h	KBC(Keyboard) Interrupt Level Select
05h	71h	R-R/W	02h	KBC(Keyboard) Interrupt Type Note3
05h	F0h	R/W	48h	KBC(Keyboard) Special Configuration Register

Table 8-7. KBC(Mouse) Configuration Registers

LDN	Index	R/W	Reset	Configuration Register or Action
06h	30h	R/W	00h	KBC(Mouse) Activate
06h	70h	R/W	0Ch	KBC(Mouse) Interrupt Level Select
06h	71h	R-R/W	02h	KBC(Mouse) Interrupt Type Note3
06h	F0h	R/W	00h	KBC(Mouse) Special Configuration Register

Note 3: These registers are **read only** unless the write enable bit (Index=F0h) is asserted.

CONFIDENTIAL

Table 8-8. GPIO Configuration Registers

LDN	Index	R/W	Reset	Configuration Register or Action
07h	60h	R/W	00h	SMI# Normal Run Access Base Address MSB Register
07h	61h	R/W	00h	SMI# Normal Run Access Base Address LSB Register
07h	62h	R/W	00h	Simple I/O Base Address MSB Register
07h	63h	R/W	00h	Simple I/O Base Address LSB Register
07h	70h	R/W	00h	Panel Button De-bounce Interrupt Level Select Register
07h	71h	R/W	00h	Watch Dog Timer Control Register
07h	72h	R/W	20h	Watch Dog Timer Configuration Register
07h	73h	R/W	38h	Watch Dog Timer Time-out Value (LSB) Register
07h	74h	R/W	00h	Watch Dog Timer Time-out Value (MSB) Register
07h	B0h	R/W	00h	GPIO Set 1 Pin Polarity Register
07h	B1h	R/W	00h	GPIO Set 2 Pin Polarity Register
07h	B2h	R/W	00h	GPIO Set 3 Pin Polarity Register
07h	B3h	R/W	00h	GPIO Set 4 Pin Polarity Register
07h	B4h	R/W	00h	GPIO Set 5 Pin Polarity Register
07h	B8h	R/W	20h	GPIO Set 1 Pin Internal Pull-up Enable Register
07h	BAh	R/W	00h	GPIO Set 3 Pin Internal Pull-up Enable Register
07h	BBh	R/W	00h	GPIO Set 4 Pin Internal Pull-up Enable Register
07h	BCh	R/W	00h	GPIO Set 5 Pin Internal Pull-up Enable Register
07h	BDh	R/W	00h	GPIO Set 6 Pin Internal Pull-up Enable Register
07h	C0h	R/W	01h	Simple I/O Set 1 Enable Register Bit0 powered by 3VSB
07h	C1h	R/W	00h	Simple I/O Set 2 Enable Register Bit 7-0 powered by 3VSB
07h	C2h	R/W	00h	Simple I/O Set 3 Enable Register
07h	C3h	R/W	40h	Simple I/O Set 4 Enable Register Bit 7-0 powered by 3VSB
07h	C4h	R/W	00h	Simple I/O Set 5 Enable Register Bit 7-0 powered by 3VSB
07h	C8h	R/W	00h	Simple I/O Set 1 Output Enable Register
07h	C9h	R/W	00h	Simple I/O Set 2 Output Enable Register
07h	CAh	R/W	00h	Simple I/O Set 3 Output Enable Register
07h	CBh	R/W	40h	Simple I/O Set 4 Output Enable Register Bit 7-0 powered by 3VSB
07h	CCh	R/W	00h	Simple I/O Set 5 Output Enable Register Bit 7-0 powered by 3VSB
07h	CDh	R/W	00h	Simple I/O Set 6 Output Enable Register Bit 7-0 powered by 3VSB
07h	CEh	R/W	00h	Simple I/O Set 7 Output Enable Register Bit 7-0 powered by 3VSB

CONFIDENTIAL

LDN	Index	R/W	Reset	Configuration Register or Action
07h	CFh	R/W	00h	Simple I/O Set 8 Output Enable Register Bit 7-0 powered by 3VSB
07h	D1h	R/W	00h	GPIO Set 9 Polarity Register
07h	D2h	R/W	00h	Simple I/O Set 9 Output Enable Register
07h	D3h	R/W	0Fh	Simple I/O Set 9 Enable Register
07h	D4h	R/W	00h	GPIO Set 9 Pin Internal Pull-up Enable Register
07h	D6h	R/W	00h	GPIO Set A Polarity Register
07h	D7h	R/W	00h	Simple I/O Set A Output Enable Register
07h	D8h	R/W	0Fh	Simple I/O Set A Enable Register
07h	D9h	R/W	00h	GPIO Set A Pin Internal Pull-up Enable Register
07h	DAh	R/W	00h	Breath LED Control Register 1
07h	DBh	R/W	00h	Breath LED Control Register 2
07h	E0h	R/W	00h	Panel Button De-bounce 0 Input Pin Mapping Register
07h	E1h	R/W	00h	Panel Button De-bounce 1 Input Pin Mapping Register
07h	E2h	R/W	00h	IRQ External Routing 0 Input Pin Mapping Register
07h	E3h	R/W	00h	IRQ External Routing 1 Input Pin Mapping Register
07h	E4h	R/W	00h	IRQ External Routing 1-0 Interrupt Level Selection Registers
07h	E7h	R/W	10h	APL Power Sequence Control Register.
07h	ECh	R/W	00h	RSTCONIN and PASWH# Mask time Control Register
07h	EFh	R/W	02h	PANSWH# Test Mode Enable/Disable Register
07h	F0h	R/W	00h	SMI# Control Register 1
07h	F1h	R/W	00h	SMI# Control Register 2
07h	F2h	R/W	00h	SMI# Status Register 1
07h	F3h	R/W	00h	SMI# Status Register 2
07h	F4h	R/W	00h	SMI# Pin Mapping Register
07h	F5h	R/W	00h	Hardware Monitor Thermal Output Pin Mapping Register Bit 7-0 powered by 3VSB
07h	F6h	R/W	0Eh	Hardware Monitor Alert Beep Pin Mapping Register
07h	F7h	R/W	00h	Keyboard Lock Pin Mapping Register
07h	F8h	R/W	00h	GP LED Blinking 1 Pin Mapping Register Bit 7-0 powered by 3VSB
07h	F9h	R/W	00h	GP LED Blinking 1 Control Register Bit 7-0 powered by 3VSB
07h	FAh	R/W	00h	GP LED Blinking 2 Pin Mapping Register Bit 7-0 powered by 3VSB
07h	FBh	R/W	00h	GP LED Blinking 2 Control Register Bit 7-0 powered by 3VSB

CONFIDENTIAL

Table 8-9. Consumer IR Configuration Registers

LDN	Index	R/W	Reset	Configuration Register or Action
0Ah	30h	R/W	00h	Consumer IR Activate
0Ah	60h	R/W	03h	Consumer IR Base Address MSB Register
0Ah	61h	R/W	10h	Consumer IR Base Address LSB Register
0Ah	70h	R/W	0Bh	Consumer IR Interrupt Level Select
0Ah	F0h	R/W	06h	Consumer IR Special Configuration Register

8.2.1 Logical Device Base Address

The base I/O range of logical devices shown below is located in the base I/O address range of each logical device.

Table 8-10. Base Address of Logical Devices

Logical Devices	Address	Notes
LDN=1 SERIAL PORT 1	Base + (0 -7)	
LDN=2 SERIAL PORT 2	Base1 + (0 -7)	COM port
LDN=3 PARALLEL PORT	Base1 + (0 -3) Base1 + (0 -7) Base1 + (0 -3) and Base2 + (0 -3) Base1 + (0 -7) and Base2 + (0 -3) Base3	SPP SPP+EPP SPP+ECP SPP+EPP+ECP POST data port
LDN=4 Environment Controller	Base1 + (0 -7) Base2 + (0 -3)	Environment Controller PME#
LDN=5 KBC	Base1 + Base2	KBC
LDN=A Consumer IR	Base + (0 -7)	

CONFIDENTIAL

8.3 Global Configuration Registers (LDN: All)

8.3.1 Configure Control (Index=02h)

This register is **write only**. Its values are not sticky; that is to say, a hardware reset will automatically clear the bits, and the software is not required to clear them.

Bit	Description
7-2	**Reserved**
1	Returns to the "Wait for Key" state. This bit is used when the configuration sequence is completed.
0	Resets all logical devices and restores configuration registers to their power-on states.

8.3.2 Logical Device Number (LDN, Index=07h)

This register is, **read/write,** which is to select the current logical devices. By reading data from or writing data to the configuration of I/O, Interrupt, DMA and other special functions, all registers of the logical devices can be accessed. In addition, ACTIVATE command is only effective for the selected logical devices.

8.3.3 Chip ID Byte 1 (Index=20h, Default=86h)

This register is Chip ID Byte 1 and **read only**. Bits [7:0]=86h when read.

8.3.4 Chip ID Byte 2 (Index=21h, Default=25h)

This register is Chip ID Byte 2 and **read only**. Bits [7:0]=25h when read.

8.3.5 Chip Version (Index=22h, Default=0Ch)

Bit	Description
7-4	**Reserved**
3-0	**Version** 0000b for AX version 0001b for BX version 0010b for CX version 0011b for DX version 0101b for EX version 0110b for FX version 0111b for GX version 1000b for HX version 1001b for IX version 1010b for JX version 1011b for KX version 1100b for LX version The part no. is IT8625E/LX.

8.3.6 Clock Selection Register (Index=23h, Default=40h)

Bit	Description
7	**LDN4\Index F4h[5] Register Clear** This function is activated when PANSWH# is low for over 4 seconds. 0: Disable 1: Enable

CONFIDENTIAL

Bit	Description
6	**VCC_OK Detect Select** 0: Internal VCC_OK (AVCC3 = 2.6V typical) 1: PSON# rising (Default) **Note:** This register is kept by 3VSB.
5	**PWRGD Source by VIN2 Enable/Disable(Powered by 3VSB)** 0: Enable 1: Disable
4	**Clock Source Select of Watch Dog Timer and LED Blinking** 0: Internal oscillating clock (Default) 1: External CLKIN
3	**CLK Select** 0: Internal DPLL CLK 1: External CLK_IN Please refer to section 9.1 for the detail.
2	**PWRGD3 Timing Selection** 0: 150ms 1: 300ms
1	**KB/MS Software Swap Enable (Powered by 3VSB)** 0: Disable (Default) 1: Enable LDN4 IndexF4h<bit7> must be set to “1b” for “disable”.
0	**CLKIN Frequency** 0: 48 MHz (Default) 1: 24 MHz

8.3.7 Special Register (Index=24h, Default=00h)

Bit	Description
7	**Software Lock Enable** 0: Disable (Default) 1: Enable
6	**LDN7 lock enable if 24h[7]=1** 0: Disable (Default) 1: Enable
5	**LDN4 lock enable if 24h[7]=1** 0: Disable (Default) 1: Enable
4	**EC(295h/296h) lock enable if 24h[7]=1** 0: Disable (Default) 1: Enable
3	**GP14 Charger Software Control Enable** 0: Disable (default) 1: Enable Please refer to section 11.19 for the detail.
2-1	**GP14 Charger Control T4 timing Select** 00: 125ms (Default) 01: 0s 10: 250ms 11: 500ms Please refer to section 11.19 for the detail.
0	**GP14 Charger Function Enable/Disable (Powered by 3VSB)** 0: Enable (Default) 1: Disable

CONFIDENTIAL

8.3.8 GPIO Set 1 Multi-Function Pin Selection Register (Index=25h, Default=00h)

If the enabled bits are not set, the multi-function pins will perform the original functions. Conversely, if they are set, they will perform the GPIO functions. This register can be read from any LDN, but can only be written if LDN=07h.

Bit	Description
7	**Function Selection of Pin 25** 0: RI2# (Default) 1: GP17
6	**Function Selection of Pin 127** 0: CIRRX2 if bit6 of CIR IER = 1 FAN_TAC4 1: GP16
5	**Function Selection of Pin 128** 0: PCIRSTIN# if bit2 of index 2C is 1 CIRTX2 if bit7 of CIR IER = 1 (Default) FAN_CTL4 if FAN4 enabled 1: GP15
4	**Function Selection of Pin 28** 0: CHARGP14 if 24h[0]=0 1: GP14
3	**Function Selection of Pin 13** 0: 5VSB_CTRL# if EUP enabled (LDN4\FAh[1]=1) 1: GP13
2	**Function Selection of Pin30** 0: PCIRST1# (Default), PCH_C0A if 2Ah[6]=1 1: GP12
1	**Function Selection of Pin 31** 0: PCIRST2# (Default) 1: GP11
0	**Function Selection of Pin 81** 0: PCIRST3# (Default) 1: GP10 CIRRX1 if CIR enabled , LDN7 Index C0h[0]=0 and C8[0]=0

CONFIDENTIAL

8.3.9 GPIO Set 2 Multi-Function Pin Selection Register (Index=26h, Default=F3h)

If the enabled bits are not set, the multi-function pins will perform the original functions. Conversely, if they are set, they will perform the GPIO functions. This register can be read from any LDN, but can only be written if LDN=07h.

Bit	Description
7	**Function Selection of Pin17** 0: SIN2 1: GP27 (Default)
6	**Function Selection of Pin18** 0: SOUT2 IO80_OUT2if LDN2 Index F0h[5]=1 1: GP26 (Default)
5	**Function Selection of Pin19** 0: DSR2# if COM2 enabled 1: GP25 (Default)
4	**Function Selection of Pin20** 0: RTS2# 1: GP24/ FAN_TAC5 (Default)
3	**Function Selection of Pin 21** 0: DPWROK (Default) 1: GP23
2	**Function Selection of Pin 22** 0: PCH_D0B if 2Ah[3]=0 and 2Bh[5]=0 (Default) For THERMTRIP#, please refer to LDN7 Index E7h[0] for the detail. 1: GP22
1	**Function Selection of Pin 23** 0: DCD2# 1: GP21 (Default)
0	**Function Selection of Pin 24** 0: CTS2# 1: GP20 (Default)

CONFIDENTIAL

8.3.10 GPIO Set 3 Multi-Function Pin Selection Register (Index=27h, Default=00h)

If the enabled bits are not set, the multi-function pins will perform the original functions. Conversely, if they are set, they will perform the GPIO functions. This register can be read from any LDN, but can only be written if LDN=07h.

Bit	Description
7	**Function Selection of Pin 8** 0: FAN_TAC3 (Default) 1: GP37
6	**Function Selection of Pin 9** 0: FAN_CTL3 (Default) 1: GP36
5	**Function Selection of Pin10** 0: RSTCONOUT 1: GP35
4	**Function Selection of Pin 11** 0: RSTCONIN 1: GP34
3	**Function Selection of Pin 124** 0: DCD1# if COM1 enabled FAN_CTL5 1: GP33
2	**Function Selection of Pin125** 0: RI1# if COM1 enabled 1: GP32
1	**Function Selection of Pin 126** 0: CTS1# if COM1 enabled (LDN1\30h=01h) and FAN_TAC5 diable (LDN7\2Dh[1]=1) 1: GP31 if FAN_TAC5 diable (LDN7\2Dh[1]=1 FAN_TAC5 if 2Dh[1]=0 and COM1 disabled (LDN1\30h=00h)
0	**Function Selection of Pin16** 0: ATXPG (Default) 1: GP30

CONFIDENTIAL

8.3.11 GPIO Set 4 Multi-Function Pin Selection Register (Index=28h, Default=00h)

If the enabled bits are not set, the multi-function pins will perform the original functions. Conversely, if they are set, they will perform the GPIO functions. This register can be read from any LDN, but can only be written if LDN=07h.

Bit	Description
7	**Function Selection of Pin 67** 0: WUE# if LDN4 Index F0h[1]=1 1: GP47
6	**Reserved**
5	**Function Selection of Pin 120** 0: DSR1# if COM1 enabled – PCH_D0A if 2Ah[3]=0 and 2Bh[5]=1 1: GP45
4	**Function Selection of Pin 53** 0: PECI, SB-TSI_C1 (Default) 1: GP44
3	**Function Selection of Pin 51** 0: SB-TSI_D, PCH_D1 if 2Ah[3]=1 (Default) 1: GP43
2	**Function Selection of Pin 118** 0: PCH_C0B if 2Ah[6]=0 and 2Ah[2]=0 S0_IDLE# if S0ix enabled (2Dh[2]=1) 1: GP42
1	**Function Selection of Pin 122** 0: SIN1 (Default) 1: GP41
0	**Function Selection of Pin 76** 0: 3VSBSW#/SCL0 (Default) 1: GP40

CONFIDENTIAL

8.3.12 GPIO Set 5 Multi-Function Pin Selection Register (Index=29h, Default=01h)

If the enabled bits are not set, the multi-function pins will perform the original functions. Conversely, if they are set, they will perform the GPIO functions. This register can be read from any LDN, but can only be written if LDN=07h.

Bit	Description
7	**Function Selection of Pin80, 79** 0: MCLK, MDAT (Default) 1: GP56, GP57
6	**Function Selection of Pin 78, 77, 42** 0: KCLK, KDAT, KRST# (Default) 1: GP60, GP61, GP62
5	**Function Selection of Pin82** 0: RSMRST# (Default) RSMRST# is an open-drain output function, which is active low about 100ms when SYS_3VSB is powered on. 1: GP55
4	**Function Selection of Pin 70** 0: PME# (Default) SLP_S0# if LDN7 Index 2Dh[2]=1 1: GP54
3	**Function Selection of Pin 74** 0: SUSC# (Default) 1: GP53
2	**Function Selection of Pin 6** 0: FAN_TAC2 (Default) 1: GP52
1	**Function Selection of Pin 7** 0: FAN_CTL2 (Default) 1: GP51
0	**Function Selection of Pin 45** 0: CLKRUN# 1: GP50 (Default)

CONFIDENTIAL

8.3.13 Special Function Selection Register 1(Index=2Ah, Default=00h)

This register can be read from any LDN, but can only be written if LDN=07h.

Bit	Description
7	**Enable 3VSBSW#/5VAUX_SW (For System Suspend-to-RAM)** **For 3VSBSW#** 0: 3VSBSW#/is always inactive. (Default) 1: 3VSBSW# is enabled. It will be (NOT SUSB#) NAND SUSC#. **For 5VAUX_SW#** 0: Disable 5VAUX_SW (Default) 1: Enable 5VAUX_SW For 5VAUX_SW mode, please refer to section 11.15 on page 212 for the detail.
6	**PCH SM-Link Clock 0 a/b Selection** 0: PCH_C0b, Pin118 1: PCH_C0a, Pin30
5	**PWRGD2/3 Reset by RSTCONIN** 0: Disable (Default) 1: Enable
4	**Delay PCIRST1/2/3# to 1ms** 0: Disable (Default) 1: Enable
3	**PCH SM-Link Data 0/1 Pin Selection** 0: PCH_D refer to LDN07 Index 2Bh[5] 1: PCH_D1, Pin51
2	**PCH SM-Link Clock 0/1 Pin Selection** 0: Refer to 2Ah[6] 1: PCH_C1, Pin52
1-0	**Reserved**

CONFIDENTIAL

8.3.14 Special Function Selection Register 2 (Index=2Bh, Default=48h)

Bit	Description
7-6	**Reserved**
5	**PCH SM-Link Data0 a/b Pin Selection** 0:PCH_D0b, Pin22 1:PCH_D0a, Pin120
4	**PWRGD Source by ATXPG Enable/Disable (Powered by 3VSB)** 0: Enable 1: Disable
3	**Reserved**
2-0	**PANSWH# Mask Time** 000: 0 second (Default) 001: 1 second 010: 2 seconds 011: 3 seconds 100: 4 seconds

8.3.15 Special Function Selection Register 3 (Index=2Ch, Default=01h)

This register can be read from any LDN, but can only be written if LDN=07h.

Bit	Description
7	**SMBus Isolation Function Enable/Disable Control (kept by 3VSB)** 0:Enable (Default) 1:Disable Note: Parallel Port Function must be disabled when SMBus Isolation Function is used. **When this function enabled** AVCC3 ON: Bypass AVCC3 OFF: Isolation
6-5	**Reserved**
4	**PS2 Mouse Double Click Wake-up Mode Selection** 0: 3-Byte mode (Default) 1: 4-Byte mode
3	**PWRGD Source by VIN3 Enable/Disable** 0: Enable 1: Disable
2	**Enable PCIRSTIN# of Pin 128** 0: Disable(Default) 1: Enable
1-0	**Reserved**

CONFIDENTIAL

8.3.16 Special Function Selection Register 4 (Index=2Dh, Default=00h)

This register can be read from any LDN, but can only be written if LDN=07h.

Bit	Description
7	**Function Selection of Pin 115** 0: SDA1 if SMBUS Slave is Enable (Default) 1: GP67
6	**Function Selection of Pin 116** 0: SCL1 if SMBUS Slave enabled 1: GP66
5	**Function Selection of Pin 117** 0: Reserved 1: GP65
4	**Function Selection of Pin 2** 0: Reserved 1: GP64
3	**Function Selection of Pin 3** 0: SLP_SUS# if JP4=0 or LDN7\E7h[4]=0 1: GP63
2	**S0ix Enable** 0: Disable 1: Enable
1	**FAN_TAC5 Enable** 0: Enable (Default) 1: Disable
0	**Reserved**

8.3.17 Test 1 Register (Index=2Eh, Default=00h)

This register is reserved for ITE and should not be set.

8.3.18 Test 2 Register (Index=2Fh, Default=00h)

This register is reserved for ITE and should not be set.

CONFIDENTIAL

8.4 Serial Port 1 Configuration Registers (LDN=01h)

8.4.1 Serial Port 1 Activate (Index=30h, Default=00h)

Bit	Description
7-1	**Reserved**
0	**Serial Port 1 Enable** 1: Enable 0: Disable

8.4.2 Serial Port 1 Base Address MSB Register (Index=60h, Default=03h)

Bit	Description
7-4	**Read only** as “0h” for Base Address[15:12]
3-0	**Read/write**, mapped as Base Address[11:8]

8.4.3 Serial Port 1 Base Address LSB Register (Index=61h, Default=F8h)

Bit	Description
7-3	**Read/write**, mapped as Base Address[7:3]
2-0	**Read only** as “000b”

8.4.4 Serial Port 1 Interrupt Level Select (Index=70h, Default=04h)

Bit	Description
7-4	**Reserved** with default “0h”
3-0	**Interrupt Select Level for Serial Port 1** Please refer to Table 8-11Interrupt Level MappingTable.

8.4.5 Serial Port 1 Special Configuration Register 1 (Index=F0h, Default=00h)

Bit	Description
7	**RS485 Enable** 1: Enable 0: Disable
6	**RTS1# Invert Enable** 1: Enable 0: Disable
5	**UART1 Port80 Enable (U1P80EN)** 1: IO80_OUT1 Enable 0: Disable (Default) **Note: The output pin of this function is SOUT1.**
4-3	**Reserved**(Must be “00b”)
2-1	**Clock Source** 00: 24 MHz/13 (Standard) 01: 24 MHz/12 10: Reserved 11: Reserved
0	**IRQ Type** 1: IRQ sharing 0: Normal

CONFIDENTIAL

8.5 Serial Port 2 Configuration Registers (LDN=02h)

8.5.1 Serial Port 2 Activate (Index=30h, Default=00h)

Bit	Description
7-1	**Reserved**
0	**Serial Port 2 Enable** 1: Enable 0: Disable

8.5.2 Serial Port 2 Base Address MSB Register (Index=60h, Default=02h)

Bit	Description
7-4	**Read only** with "0h" for Base Address[15:12]
3-0	**Read/write**, mapped as Base Address[11:8]

8.5.3 Serial Port 2 Base Address LSB Register (Index=61h, Default=F8h)

Bit	Description
7-3	**Read/write**, mapped as Base Address[7:3]
2-0	**Read only** as "000b"

8.5.4 Serial Port 2 Interrupt Level Select (Index=70h, Default=03h)

Bit	Description
7-4	**Reserved** with default "0h"
3-0	**Interrupt Level Select for Serial Port 2** Please refer to Table 8-11Interrupt Level MappingTable.

8.5.5 Serial Port 2 Special Configuration Register 1 (Index=F0h, Default=00h)

Bit	Description
7	**RS485 Enable** 1: Enable 0: Disable
6	**RTS2# Invert Enable** 1: Enable 0: Disable
5	**UART2 Port80 Enable (U2P80EN)** 1: IO80_OUT2 Enable 0: Disable (Default) **Note: The output pin of this function is SOUT2**
4-3	**Reserved**(Must be "00b")
2-1	**Clock Source** 00: 24 MHz/13 (Standard) 01: 24 MHz/12 10: Reserved 11: Reserved
0	**IRQ Type** 1: IRQ sharing 0: Normal

CONFIDENTIAL

8.6 Parallel Port Configuration Registers (LDN=03h)

8.6.1 Parallel Port Activate (Index=30h, Default=00h)

Bit	Description
7-1	**Reserved**
0	**Parallel Port Enable** 1: Enable 0: Disable **Note:** Bus selection and SMBus isolation must be disabled when this function is enabled.

8.6.2 Parallel Port Primary Base Address MSB Register (Index=60h, Default=03h)

Bit	Description
7-4	**Read only** as “0h” for Base Address[15:12]
3-0	**Read/write**, mapped as Base Address[11:8]

8.6.3 Parallel Port Primary Base Address LSB Register (Index=61h, Default=78h)

If bit 2 is set to 1, the EPP mode is disabled automatically.

Bit	Description
7-2	**Read/write**, mapped as Base Address[7:2]
1-0	**Read only** as “00b”

8.6.4 Parallel Port Secondary Base Address MSB Register (Index=62h, Default=07h)

Bit	Description
7-4	**Read only** as “0h” for Base Address[15:12]
3-0	**Read/write**, mapped as Base Address[11:8]

8.6.5 Parallel Port Secondary Base Address LSB Register (Index=63h, Default=78h)

Bit	Description
7-2	**Read/write**, mapped as Base Address[7:2]
1-0	**Read only** as “00b”

8.6.6 Parallel Port Interrupt Level Select (Index =70h, Default=07h)

Bit	Description
7-4	**Reserved** with default “0h”
3-0	**Interrupt Level Select for Parallel Port** Please refer to Table 8-11Interrupt Level MappingTable.

8.6.7 Parallel Port DMA Channel Select (Index=74h, Default=03h)

Bit	Description
7-3	**Reserved** with default “00h”
2-0	**DMA Channel Select for Parallel Port** Please refer to Table 8-12DMA Channel MappingTable on page 87.

CONFIDENTIAL

8.6.8 Parallel Port Special Configuration Register (Index=F0h, Default=0Bh)

Bit	Description
7-6	**DIG3-0 Output Selection** 00: Normal Port-80 (for 7-Seg decode data) 01: EC Index 29h Reading 10: EC Index 2Ah Reading 11: EC Index 2Bh Reading
5-4	**Reserved**
3	**Port-80 Function (P80EN)** 1: Disable (Default) 0: Enable
2	**IRQ Type** 1: IRQ sharing 0: Normal
1-0	**Parallel Port Modes** 00 : Standard Parallel Port mode (SPP) 01 : EPP mode 10 : ECP mode 11 : EPP mode & ECP mode These bits are independent. If bit 1 is set, ECP mode is enabled. If bit 0 is set, EPP mode is enabled except when bit 2 of Parallel Port Primary Base Address LSB Register is set to 1 in accordance with the EPP specification.

CONFIDENTIAL

8.7 Environment Controller Configuration Registers (LDN=04h)

8.7.1 Environment Controller Activate (Index=30h, Default=00h)

Bit	Description
7-1	**Reserved**
0	**Environment Controller Enable** 1: Enable 0: Disable This is a read/write register.

8.7.2 Environment Controller Base Address MSB Register (Index=60h, Default=02h)

Bit	Description
7-4	**Read only** as “0h” for Base Address[15:12]
3-0	**Read/write**, mapped as Base Address[11:8]

8.7.3 Environment Controller Base Address LSB Register (Index=61h, Default=90h)

Bit	Description
7-3	**Read/write**, mapped as Base Address[7:3]
2-0	**Read only** as “000b”

8.7.4 PME Direct Access Base Address MSB Register (Index=62h, Default=02h)

Bit	Description
7-4	**Read only** as “0h” for Base Address[15:12]
3-0	**Read/write**, mapped as Base Address[11:8]

8.7.5 PME Direct Access Base Address LSB Register (Index=63h, Default=30h)

Bit	Description
7-3	**Read/write**, mapped as Base Address[7:3]
2-0	**Read only** as “000b.”

8.7.6 Environment Controller Interrupt Level Select (Index=70h, Default=09h)

Bit	Description
7-4	**Reserved** with default “0h”
3-0	**Interrupt LevelSelect for Environment Controller** Please refer to Table 8-11Interrupt Level MappingTable on page 87.

CONFIDENTIAL

8.7.7 EC HWM MMIO Control Register (Index=74h, Default=00h)

Bit	Description
7-6	**EC HWM MMIO Offset(ECMMIO_OffSET)** 00: ECMMIO_BAR + 00_0000h(Default) 01: ECMMIO_BAR + 10_0000h 10: ECMMIO_BAR + 20_0000h 11: ECMMIO_BAR + 30_0000h **ECMMIO_BAR is determined by LDN04\Index 74h[bit 3-0]** **Note:** EC Bank Select addr[bit 9-8] Bank-0: addr[9-8] = 00b, ex:FX00_0000h Bank-1: addr[9-8] = 01b, ex:FX00_0100h Bank-2: addr[9-8] = 10b, ex:FXD00_0200h Bank-3: addr[9-8] = 11b, ex:FX00_0300h
5	**EC HWM MMIO Enable** 0: Disable 1: Enable
4	**Reserved**
3-0	**EC HWM MMIO Base Address(ECMMIO_BAR)** Decode base address = FX00_0000h, 'X' is controlled by bit 3-0. (Default=F000_0000h)

CONFIDENTIAL

8.7.8 APC/PME Event Enable Register (PER) (Index=F0h, Default=00h)

Bit	Description
7	This bit is set to 1 when 3VSB is off and becomes ineffective if 0 is written to it.This bit is write clear..
6-5	**Reserved**
4	**PS/2 Mouse Event** 0: Disable 1: Enable
3	**KeyboardEvent** 0: Disable 1: Enable
2	**Reserved**
1	**WUE# Event** 0: Disable 1: Enable
0	**CIR Event** 0: Disable 1: Enable

8.7.9 APC/PME Status Register (PSR) (Index=F1h, Default=00h)

Bit	Description
7	This bit is set to 1 when AVCC3 is on at the previous AC power failure whereas 0 when AVCC3 is off. This bit is write 1 clear
6-5	**Reserved**
4	0: No PS/2 mouse event detected 1: PS/2 mouse event detected
3	0: No keyboard event detected 1: Keyboard event detected
2	**Reserved**
1	0: No WUE#event detected 1: WUE# event detected
0	0: No CIR event detected 1: CIR event detected

CONFIDENTIAL

8.7.10 APC/PME Control Register 1 (PCR 1) (Index=F2h, Default=00h)

Bit	Description
7	**PER and PSR Normal Run Access Enable**
6	**PME# Output Control** 0: Enable 1: Disable
5	This bit is restored automatically to the previous AVCC3 state before the power failure occurs. **Note:** AC failure resume can be made by either IO or South Bridge. For the use of IO, the BIOS needs to be set as the following: LDN4 F4[5] and LDN4 F2[5] setting: 1 X :Always ON 0 1 :Memory 0 0 :Always OFF For the use of South Bridge, F4 bit 5 and F4 bit 6 need to be set to 1.
4	**Reserved**
3	**Keyboard event mode selection when AVCC3 is on** 1: Determined by PCR 2 0: Pulse falling edge on KCLK
2	**Mouse event when AVCC3 is off** 1: Determined by LDN4\FBh<6-4> 0: Pulse falling edge on MCLK
1	**Mouse event when AVCC3 is on** 1: Determined by LDN4\FBh<6-4> 0: Pulse falling edge on MCLK
0	**RSMRST# Delay Time Setting (Keep by VBAT)** 1: 250ms 0: 85ms (Default)

8.7.11 Environment Controller Special Configuration Register (Index=F3h, Default=00h)

Bit	Description
7-6	**Reserved**
5	**Reserved;**must be 0b
4-3	**Reserved**
2	**SMBUS Slave 1 Enable (Pin116:SCL1/Pin115:SDA1)** 0: Disabled.(Default) 1: Enabled
1	**SMBUS Slave 0 Enable (Pin 76:SCL0/ Pin75:SDA0)** 0: Disabled.(Default) 1: Enabled
0	**IRQ Type** 1: IRQ sharing 0: Normal

CONFIDENTIAL

8.7.12 APC/PME Control Register 2 (PCR 2) (Index=F4h, Default=00h)

Bit	Description
7	**Auto-swap of KCLK/KDAT and MCLK/MDAT** 0: Enable(Default) 1: Disable
6	**Gate Extra PWRON# Pulse at First 3VSB Power-on** 0: Not gating (Default) 1: Gating **Note:** AC failure resume can be made by either IO or South Bridge. For the use of IO, the BIOS needs to be set as the following: LDN4 F4[5] and LDN4 F2[5] setting: 1 X :Always ON 0 1 :Memory 0 0 :Always OFF For the use of South Bridge, F4 bit 5 and F4 bit 6 need to be set to 1.
5	**PSON# state when 3VSB is switched from off to on** 0: High-Z (power OFFin default) 1: Inverting of SUSB#
4	**Keyboard Power-up Event-2** 0: Enable 1: Disable
3-2	**Key Number of Keyboard Power-up Event** 00: 5 Key string mode, 3 keys simultaneous mode 01: 4 Key string mode, 2 keys simultaneous mode 10: 3 Key string mode, 1 key simultaneous mode 11: 2 Key string mode, Reserved (Not valid for simultaneous mode)
1-0	**Mode Selection of Keyboard Power-up Event** 00: KCLK falling edge 01: Key string mode 10: Simultaneous key stroke mode 11: Reserved

8.7.13 APC/PME Special Code Index Register (Index=F5h)

Bit	Description
7-6	**Reserved** (should be “00”)
5-0	**Indicate which Identification Key Code or CIR code register to be read/written via 0xF6** 00h~04h: Key code 20h~32h: CIR code 34h~37h: VBAT registers 38h~3Eh: Keyboard Power-up Event-2 code

CONFIDENTIAL

8.7.14 APC/PME Special Code Data Register (Index=F6h)

There are 5 bytes for the Key String mode, 3 bytes for Stroke Keys at the same time mode and CIR event codes.

8.7.15 Under Voltage Protection/Over Voltage (UVP/OVP) Configure Register (Index=F9h, Default=48h)

Please refer topower-on strapping option (JP5) for the detail.

Bit	Description
7	**Notice Mode UVP/OVP Enable** 0: Disable 1: Enable
6-5	**Reserved**
4-3	**Notice Mode PSON# Pull-up Time** 00: 0.5 second 01: 1 second 10: 2 seconds 11: 4 seconds
2	**UVP/OVP Output to KRST#** 0: Disable 1: Enable
1	**Reserved**
0	**Notice Mode Status (JP5=1)** 0: No OVP/UVP event 1: OVP/UVP event detected

CONFIDENTIAL

8.7.16 Special Configuration Register 1 (Index=FAh, Default=00h)

Bit	Description
7-6	**GP14 Charger Control T1 Timing Select** 00: 1s (default) 01: 0.5s 10: 2s 11: 4s Please refer to section 11.19 for the detail.
5	**5VSB_SEN enable** 0: Disable (Default) 1: Enable
4	**EuP Wake-up Event Enable/Disable** 0: Disable (Default) 1: Enable
3	**RI2# Wake-up Event Enable/Disable** 0: Disable (Default) 1: Enable
2	**RI1# Wake-up Event Enable/Disable** 0: Disable (Default) 1: Enable
1	**5VSB_CTRL# Enable/Disable** 0: Disable (Default) 1: Enable
0	**5VAUX_SW Signal Control Register** 0: Inverse of 3VSBSW# (Default) 1: Active at S5&S3 stage for future use

CONFIDENTIAL

8.7.17 Special Configuration Register 2 (Index=FBh, Default=00h)

Bit	Description
7	**GP14 Charger Control T3 Timing Select MSB Bit** LSB bit please refer to LDN4\FDh[bit-4] 00: 125ms (default) 01: 0s 10: 250ms 11: 500ms Please refer to section 11.19 for the detail.
6-4	**PS/2 Mouse Wake-up Event Selection** 000: Double click any button 001: One click of the left button. 010: One click of the right button. 011: One click of the left or right button. 101: Tow click of the left button. 110: Tow click of the right button. Others: Reserved.
3	**RI2# Wake-up Event Status** 0: No RI2# event detected 1: RI2# event detected
2	**RI1# Wake-up Event Status** 0: No RI1# event detected 1: RI1# event detected
1-0	**Resume Timing from AC Fail Resume** 00: 2 seconds 01: 4 seconds 10: 8 seconds 11: 12 seconds

CONFIDENTIAL

8.7.18 UVP/OVP Range Selection Register 1(Index=FCh, Default=00h)

Bit	Description
7-5	**PWRON Delay Select** 000: No delay (Default) 001: 100ms 010: 200ms 011: 400ms 100: 800ms 101: 1s 110: 1.6s 111: 2s Register kept by VBAT
4	**Reserved**
3-2	**+12V_SEN OVP Range Selection** 00: +20%(Default) 01: +25% 10: +15% 11: +10%
1-0	**+12V_SEN UVP Range Selection** 00: -25%(Default) 01: -30% 10: -20% 11: -15%

8.7.19 UVP/OVP Range Selection Register 2 (Index=FDh, Default=40h)

Bit	Description
7-5	**Reserved**
4	**GP14 Charger Control T3 timing Select LSB Bit** For the MSB bit please refer to LDN4\FBh[bit-7] for the detail. 00: 125ms (default) 01: 0s 10: 250ms 11: 500ms **Please refer to section 11.19 for the detail.**
3-2	**+3V_SEN OVP Range Selection** 00: +20%(Default) 01: +25% 10: +15% 11: +10%
1-0	**+3V_SEN UVP Range Selection** 00: -20%(Default) 01: -25% 10: -15% 11: -10%

CONFIDENTIAL

8.8 KBC(Keyboard) Configuration Registers (LDN=05h)

8.8.1 KBC(Keyboard) Activate (Index=30h, Default=01h)

Bit	Description
7-1	**Reserved**
0	**KBC(Keyboard) Enable** 1: Enable 0: Disable

8.8.2 KBC(Keyboard) Data Base Address MSB Register (Index=60h, Default=00h)

Bit	Description
7-4	**Read only** as “0h” for Base Address [15:12]
3-0	**Read/write,** mapped as Base Address [11:8]

8.8.3 KBC(Keyboard) Data Base Address LSB Register (Index=61h, Default=60h)

Bit	Description
7-0	**Read/write**, mapped as Base Address[7:0]

8.8.4 KBC(Keyboard) Command Base Address MSB Register (Index=62h, Default=00h)

Bit	Description
7-4	**Read only** as “0h” for Base Address[15:12]
3-0	**Read/write**, mapped as Base Address[11:8]

8.8.5 KBC(Keyboard) Command Base Address LSB Register (Index=63h, Default=64h)

Bit	Description
7-0	**Read/write**, mapped as Base Address[7:0]

8.8.6 KBC(Keyboard) Interrupt Level Select (Index=70h, Default=01h)

Bit	Description
7-4	**Reserved** with default “0h”
3-0	**Interrupt LevelSelect for KBC(Keyboard)** Please refer to Table 8-11Interrupt Level MappingTable on page 87.

8.8.7 KBC(Keyboard) Interrupt Type (Index=71h, Default=02h)

This register indicates the interrupt type set for KBC(Keyboard) and is **read only** as “02h” when bit 0 of the KBC(Keyboard) Special Configuration Register is cleared. When bit 0 is set, the interrupt type can be selected as level or edge trigger.

Bit	Description
7-2	**Reserved**
1	1: High level 0: Low level
0	1: Level type 0: Edge type

CONFIDENTIAL

8.8.8 KBC(Keyboard) Special Configuration Register (Index=F0h, Default=48h)

Bit	Description
7-5	**Reserved** Must be “010b”
4	**IRQ Type** 1: IRQ sharing 0: Normal
3	**KBC Clock** 1: 8 MHz 0: 12 MHz
2	**KBC Lock** 1: Enable 0: Disable
1	**Interrupt Type Change Enable** 1: The interrupt type for KBC(Keyboard) can be changed. 0: The interrupt type for KBC(Keyboard) is fixed.
0	**Reserved**

CONFIDENTIAL

8.9 KBC(Mouse) Configuration Registers (LDN=06h)

8.9.1 KBC(Mouse) Activate (Index=30h, Default=00h)

Bit	Description
7-1	**Reserved**
0	**KBC(Mouse) Enable** 1: Enable 0: Disable

8.9.2 KBC(Mouse) Interrupt Level Select (Index=70h, Default=0Ch)

Bit	Description
7-4	**Reserved** with default "0h"
3-0	**Interrupt LevelSelect for KBC(Mouse)** Please refer to Table 8-11Interrupt Level MappingTable on page 87.

8.9.3 KBC(Mouse) Interrupt Type (Index=71h, Default=02h)

This register indicates the interrupt type set for KBC(Mouse) and is **read only** as "02h" when bit 0 of the KBC(Mouse) Special Configuration Register is cleared. When bit 0 is set, the interrupt type can be selected as level or edge trigger.

Bit	Description
7-2	**Reserved**
1	1: High level 0: Low level
0	1: Level type 0: Edge type

8.9.4 KBC(Mouse) Special Configuration Register (Index=F0h, Default=00h)

Bit	Description
7-2	**Reserved** with default "00h"
1	**IRQ Type** 1: IRQ sharing 0: Normal
0	**Interrupt Type Change Enable** 1: The interrupt type for KBC(Mouse) can be changed. 0: The interrupt type for KBC(Mouse) is fixed.

CONFIDENTIAL

8.10 GPIO Configuration Registers (LDN=07h)

8.10.1 SMI# Normal Run Access Base Address MSB Register (Index=60h, Default=00h)

Bit	Description
7-4	**Read only** as "0h" for Base Address [15:12]
3-0	**Read/write**, mapped as Base Address [11:8]

8.10.2 SMI# Normal Run Access Base Address LSB Register (Index=61h, Default=00h)

Bit	Description
7-2	**Read/write**, mapped as Base Address[7:2]
1-0	**Read only** as "00b"

8.10.3 Simple I/O Base Address MSB Register (Index=62h, Default=00h)

Bit	Description
7-4	**Read only** as "0h" for Base Address [15:12]
3-0	**Read/write**, mapped as Base Address [11:8]

8.10.4 Simple I/O Base Address LSB Register (Index=63h, Default=00h)

Bit	Description
7-0	**Read/write**, mapped as Base Address[7:0]

8.10.5 Panel Button De-bounce Interrupt Level Select Register (Index=70h, Default=00h)

Bit	Description
7-4	**Reserved**
3-0	**Interrupt LevelSelectfor Panel Button De-bounce** Please refer to Table 8-11Interrupt Level MappingTable on page 87.

8.10.6 Watch Dog Timer Control Register (Index=71h, Default=00h)

Bit	Description
7	WDT is reset upon a CIR interrupt.
6	WDT is reset upon a KBC(Mouse) interrupt.
5	WDT is reset upon a KBC(Keyboard) interrupt.
4	**WDT Output through RSTCONOUT (pulse) Enable** 1: Enable 0: Disable
3	**External CLK_IN Select** 0: CLKIN_L 1: PCICLK Please refer to section 9.1 for the detail.
2	**5VSB_CTL Delay Select** 0: 5s (Default) 1: 10s
1	**Force Time-out** This bit is self-cleared.
0	**WDT Status** 1: WDT value is equal to 0.

CONFIDENTIAL

Bit	Description
	0: WDT value is not is equal to 0.

8.10.7 Watch Dog Timer Configuration Register (Index=72h, Default=001s0000b)

Bit	Description
7	**WDT Time-out Value Select 1** 1: Second 0: Minute
6	**WDT Output through KRST (pulse) Enable** 1: Enable 0: Disable
5	**WDT Time-out Value Extra Select** 1: 62.5ms x WDT Timer-out value (default = 3.5s) 0: Determined by WDT Time-out value select 1 (bit 7 of this register)
4	**WDT Output through PWRGD Enable** 1: Enable 0: Disable *During LRESET# this bit is selected by JP2 power-on strapping option.*
3-0	**Interrupt LevelSelect for WDT** Please refer to Table 8-11Interrupt Level MappingTable on page 87.

8.10.8 Watch Dog Timer Time-out Value (LSB) Register (Index=73h, Default=38h)

Bit	Description
7-0	**WDT Time-out Value 7-0**

8.10.9 Watch Dog Timer Time-out Value (MSB) Register (Index=74h, Default=00h)

Bit	Description
7-0	**WDT Time-out Value 15-8**

CONFIDENTIAL

8.10.10 GPIO Set 1-9 Registers (Index B0h~D4h)

GPIO Set	Polarity Register		Internal Pull-up Register		SimpleEnable Register		Input/Output Select Register		Input/Output Control Register	
	Index	Default	Index	Default	Index	Default	Index	Default	Index	Default
1	B0h	00h	B8h	00h	C0h	01h	C8h	00h	For Simple I/O Base Address Register,,refer to section 8.10.3 for the detail.	
2	B1h	00h	--	--	C1h	00h	C9h	00h		
3	B2h	00h	BAh	00h	C2h	00h	CAh	00h		
4	B3h	00h	BBh	00h	C3h	40h	CBh	00h		
5	B4h	00h	BCh	00h	C4h	00h	CCh	00h		
6	-	-	BDh	00h	-	-	CDh	00h		
7	-	-	-	-	-	-	CEh	00h		
8	-	-	-	-	-	-	CFh	00h		
9	D1h	00h	D4h	00h	D3h	0Fh	D2h	00h		
A	D6h	00h	D9h	00h	D8h	00h	D7h	00h		

Note: For GP2x, GP43, GP53, GP54, GP62, GP90, GPA4, GPA5 and GPA6, internal pull-up is not supported.

Polarity Register

These registers are to program the GPIO pin type for polarity inverting or non-inverting.

Bit	Description
7-0	**GPIO Polarity Select** 1: Inverting 0: Non-inverting

Internal Pull-up Register

These registers are to enable the GPIO pin internal pull-up.

Bit	Description
7-0	**GPIO Pin Internal Pull-up** 1: Enable 0: Disable

SimpleEnable Register

These registers are to select the function as the Simple I/O function or the Alternate function.

Bit	Description
7-0	1: Simple I/O function 0: Alternate function

Input/Output Select Register

These registers are to determine the direction of the Simple I/O.

Bit	Description
7-0	0: Input mode 1: Output mode

Input/Output Control Register(for GPIO Set-9 Only)

Bit	Description
7-0	**Pin Status for GPIO Input Pin** 0: Low 1: Hight **Output Control for GPIO Output** 0: Output low 1: Output high

CONFIDENTIAL

8.10.11 Breath LED Control Register1 (Index=DAh,Default=B0h)

Bit	Description
7	**Reserved**
6	**Reserved**
5-4	**BREATH LED Maximum Duty Cycle Select (HMXD)** 00b: 40h 01b: 80h 10b: C0h 11b: FFh
3-2	**BREATH LED Duty Decreasing Step (DDS)** 00b: 1h 01b: 2h 10b: 4h 11b: 8h
1-0	**BREATH LED Duty Increasing Step (DIS)** 00b: 1h 01b: 2h 10b: 4h 11b: 8h

8.10.12 Breath LED Control Register2 (Index=DBh,Default=44h)

Bit	Description
7	**BREATH LED BLINK Enable** 0: Disable 1: Enable **Note:** Breathing LED function is for LED Blinking 1 only. Please refer to 9.8 BREATH LED on page 160.
6-4	**BREATH LED Maximum Duty Cycle Delay Period (HMXDD)** 011b: 1/2 s 100b: 1 s 101b: 2 s 110b: 4 s
3	**Reserved**
2-0	**BREATH LED Zero Duty Cycle Delay Period (HZDD)** 011b: 1/2 s 100b: 1 s 101b: 2 s 110b: 4 s

CONFIDENTIAL

8.10.13 Panel Button De-bounce 0 Input Pin Mapping Register(Index=E0h,Default=00h)

Bit	Description
7	**Reserved**
6	**IRQ Enable**
5-0	**Input Pin Location** Please refer to Table 8-13Location MappingTable on page 88.

8.10.14 Panel Button De-bounce 1 Input Pin Mapping Register (Index=E1h,Default=00h)

Bit	Description
7-6	**Reserved**
5-0	**Input Pin Location** Please refer to Table 8-13Location MappingTable on page 88.

8.10.15 IRQ External Routing 1-0 Input Pin Mapping Registers (Index=E3h-E2h, Default=00h)

Bit	Description
7	**Reserved**
6	**IRQ Enable**
5-0	**Input Pin Location** Please refer to Table 8-13Location MappingTable on page 88.

8.10.16 IRQ External Routing 1-0 Interrupt Level Selection Registers (Index=E4h, Default=00h)

Bit	Description
7-4	**Interrupt Level Select for IRQ External Routing 1** Please refer to Table 8-11Interrupt Level MappingTable on page 87.
3-0	**Interrupt LevelSelect for IRQ External Routing 0** Please refer to Table 8-11Interrupt Level MappingTable on page 87.

CONFIDENTIAL

8.10.17 APL Power Sequence Control Register (Index=E7h, Default=000s0000b)

Bit	Description
7	**FAN_PWR_S0ix Control Register** 0: Disable (Default) 1: Enable (Output High in S0ix mode)
6	**Reserved**
5	**SUSB# IE Gating for APL AC in** 0: Disable (Default) 1: Enable
4	**PWRON# Output Gating with RSMRST#** 0: SLP_SUS enabled (PWRON# Non-gating) if JP4=0 1: SLP_SUS disabled (PWRON# gating) if JP4=1
3	**Over Temperature Forced Shut-Down Control Register** 0b: Disable (Default) 1b: Enable If Function Activated: When the temperature is above the high limit temperature or below the low limit temperature, this feature will force the system into shutdown. High/Low Limit Register Setting : For High Limit Register, please refer to EC_40h/42h/44h/46h/B4h/B6h. For Low Limit Register, please refer to EC_41h/43h/45h/47h/B5h/B7h.
2	**Thermtrip# Input Status**
1	**P5VSB_CTL# & RSMRST# Output Gating** 0: Enable 1: Disable
0	**APL Power Sequence Enable** 0: Disable 1: Enable

8.10.18 RSTCONIN/PANSHW# Mask Time Control Register(Index=ECh, Default=00h)

Bit	Description
7-0	**RSTCONIN/PANSWH# Mask Time Selection** 00h: Disable (Default) 01h: 1s 02h: 2s ……. FEh: 254s FFh: 255s

CONFIDENTIAL

8.10.19 PANSWH# Test Mode Enable/Disable Register (Index=EFh, Default=00h)

Bit	Description
7-5	**Reserved**
4	**PANSWH# Test Mode Enable/Disable** 0: Disable (Default) 1: Enable
3-0	**Reserved**

8.10.20 SMI# Control Register 1 (Index=F0h, Default=00h)

Bit	Description
7	**Reserved**
6	This bit is to enable the generation of an SMI# due to KBC(Mouse)'s IRQ (EN_MIRQ).
5	This bit is to enable the generation of an SMI# due to KBC(Keyboard)'s IRQ (EN_KIRQ).
4	This bit is to enable the generation of an SMI# due to Environment Controller's IRQ (EN_ECIRQ).
3	This bit is to enable the generation of an SMI# due to Parallel Port's IRQ (EN_PIRQ).
2	This bit is to enable the generation of an SMI# due to Serial Port 2's IRQ (EN_S2IRQ).
1	This bit is to enable the generation of an SMI# due to Serial Port 1's IRQ (EN_S1IRQ).
0	**Reserved**

8.10.21 SMI# Control Register 2 (Index=F1h, Default=00h)

Bit	Description
7	**Reserved**
6	0: Edge trigger 1: Level trigger
5-3	**Reserved**
2	This bit is to enable the generation of an SMI# due to WDT's IRQ (EN_WDT).
1	This bit is to enable the generation of an SMI# due to CIR's IRQ (EN_CIR).
0	This bit is to enable the generation of an SMI# due to PBD's IRQ (EN_PBD).

8.10.22 SMI# Status Register 1 (Index=F2h, Default=00h)

This register is used to read the status of SMI# inputs.

Bit	Description
7	**Reserved**
6	**KBC (PS/2 Mouse)'s IRQ**
5	**KBC(Keyboard)'s IRQ**
4	**Environment Controller's IRQ**
3	**Parallel Port's IRQ**
2	**Serial Port 2's IRQ**
1	**Serial Port 1's IRQ**
0	**Reserved**

CONFIDENTIAL

8.10.23 SMI# Status Register 2 (Index=F3h, Default=00h)

This register is used to read the status of SMI# inputs.

Bit	Description
7-6	**Panel Button De-bounce Status 1-0** Writing 1 will reset the status. 0: None detected 1: Detected
5-3	**Reserved**
2	**WDT's IRQ**
1	**CIR's IRQ**
0	**PBD's IRQ**

8.10.24 SMI# Pin Mapping Register (Index=F4h, Default=00h)

Bit	Description
7-6	**Reserved**
5-0	**SMI# Pin Location** Please refer to Table 8-13Location MappingTable on page 88.

8.10.25 Thermal Output Register (Index=F5h, Default=00h)

Bit	Description
7	**Reserved**
6	**Thermal Out Control Register** 0: Thermal out 1: Reserved
5-0	**Pin Location** Please refer to Table 8-13Location MappingTable on page 88.

8.10.26 Hardware Monitor Alert Beep Pin Mapping Register (Index=F6h, Default=0Eh)

Bit	Description
7-6	**Reserved**
5-0	**Alert Beep Pin Location** Please refer to Table 8-13Location MappingTable on page 88.

8.10.27 Keyboard Lock Pin Mapping Register (Index=F7h, Default=00h)

Bit	Description
7-6	**Reserved**
5-0	**Keyboard Lock Pin Location** Please refer to Table 8-13Location MappingTable on page 88.

CONFIDENTIAL

8.10.28 GP LED Blinking 1 Pin Mapping Register (Index=F8h, Default=00h)

Bit	Description
7-6	**Reserved**
5-0	**GP LED Blinking 1 Location** Please refer to Table 8-13Location MappingTable on page 88.

8.10.29 GP LED Blinking 1 Control Register (Index=F9h, Default=00h)

Bit	Description
7-6	**GP_LED1 Frequence Selection** Please refer to LDN7\F9h[bit 3-1]
5	**GP LED Blinking 1 Short Low Pulse Enable**
4	**LED Blinking 1 Pin Mapping Register Clear** This function is activated when PANSWH# is low for over 4 seconds. 0: Disable 1: Enable
3-1	**GP LED 1 Frequency Control**

F9h[7:6]	F9h[3:1]	Blink frequency & Duty		ON/OFF Time			
00	000:	4Hz,	50% Duty	0.125s	OFF	0.125s	ON
00	001:	1Hz,	50% Duty	0.5s	OFF	0.5s	ON
00	010:	0.25Hz,	50% Duty	2s	OFF	2s	ON
00	011:	2Hz,	50% Duty	0.25s	OFF	0.25s	ON
00	100:	0.25Hz,	25% Duty	1s	OFF	3s	ON
00	101:	0.25Hz,	75% Duty	3s	OFF	1s	ON
00	110:	0.125Hz,	25% Duty	2s	OFF	6s	ON
00	111:	0.125Hz	75% Duty	6s	OFF	2s	ON
01	XXX	0.4Hz,	20% Duty	0.5s	OFF	2s	ON
10	XXX	0.5 Hz,	50% Duty	1S	OFF	1S	ON
11	XXX	0.125Hz,	50% Duty	4S	OFF	4S	ON

0	**GP LED Blinking 1 Output Low Enable**

CONFIDENTIAL

8.10.30 GP LED Blinking 2 Pin Mapping Register (Index=FAh, Default=00h)

Bit	Description
7-6	**Reserved**
5-0	**GP LED Blinking 2 Location** – Please refer to Table 8-13Location MappingTable on page 88.

8.10.31 GP LED Blinking 2 Control Register (Index=FBh, Default=00h)

Bit	Description
7-6	**GP_LED2 Frequence selection** Please refer to LDN7\FBh[bit 3-1]
5	**GP LED Blinking 2Short Low Pulse Enable**
4	**LED Blinking 2 Pin Mapping Register Clear** This function is activated when PANSWH# is low for over 4 seconds. 0: Disable 1: Enable
3-1	**GP LED 2 Frequency Control**
0	**GP LED Blinking 2 Output Low Enable**

FBh[7:6]	FBh[3:1]	Blink frequency & Duty		ON/OFF Time			
00	000:	4Hz,	50% Duty	0.125s	OFF	0.125s	ON
00	001:	1Hz,	50% Duty	0.5s	OFF	0.5s	ON
00	010:	0.25Hz,	50% Duty	2s	OFF	2s	ON
00	011:	0.5Hz,	50% Duty	1s	OFF	1s	ON
00	100:	0.25Hz,	25% Duty	1s	OFF	3s	ON
00	101:	0.25Hz,	75% Duty	3s	OFF	1s	ON
00	110:	0.125Hz,	25% Duty	2s	OFF	6s	ON
00	111:	0.125Hz	75% Duty	6s	OFF	2s	ON
01	XXX	0.4Hz,	20% Duty	0.5s	OFF	2s	ON
10	XXX	0.5 Hz,	50% Duty	1S	OFF	1S	ON
11	XXX	0.125Hz,	50% Duty	4S	OFF	4S	ON

CONFIDENTIAL

8.11 Consumer IR Configuration Registers (LDN=0Ah)

8.11.1 Consumer IR Activate (Index=30h, Default=00h)

Bit	Description
7-1	**Reserved**
0	**Consumer IR Enable** 1: Enable 0: Disable

8.11.2 Consumer IR Base Address MSB Register (Index=60h, Default=03h)

Bit	Description
7-4	**Read only** with "0h" for Base Address[15:12]
3-0	**Read/write**, mapped as Base Address[11:8]

8.11.3 Consumer IR Base Address LSB Register (Index=61h, Default=10h)

Bit	Description
7-3	**Read/write**, mapped as Base Address[7:3]
2-0	**Read only** as "000b"

8.11.4 Consumer IR Interrupt Level Select (Index=70h, Default=0Bh)

Bit	Description
7-4	**Reserved** with default "0h"
3-0	**Interrupt Level Select for Consumer IR** Please refer to Table 8-11Interrupt Level MappingTable.

8.11.5 Consumer IR Special Configuration Register (Index=F0h, Default=06h)

Bit	Description
7-1	**Reserved** with default "00h"
0	**IRQ Type** 1: IRQ sharing 0: Normal

Note 8-1
Except the standard mode, COM1 and COM2 cannot be selected in the same mode.

CONFIDENTIAL

Table 8-11Interrupt Level MappingTable

Value	Description
Fh-Dh	Not Valid
3h~Ch	IRQ3~IRQ12
2h	Not Valid
1h	IRQ1
0h	No Interrupt Selected
Else	Not Valid

Table 8-12DMA Channel MappingTable

Value	Description
7h-5h	Invalid
4h	No DMA Channel Selected
3h	DMA3
2h	DMA2
1h	DMA1
0h	DMA0

CONFIDENTIAL

Table 8-13Location MappingTable

Location	Description
001 000	GP10
001 001	GP11
001 010	GP12
001 011	GP13
001 100	GP14
001 101	GP15
001 110	GP16
001 111	GP17
010 000	GP20
010 001	GP21
010 010	GP22
010 011	GP23
010 100	GP24
010 101	GP25
010 110	GP26
010 111	GP27
011 000	GP30
011 001	GP31
011 010	GP32
011 011	GP33
011 100	GP34
011 101	GP35
011 110	GP36
011 111	GP37
100 000	GP40
100 001	GP41
100 010	GP42
100 011	GP43
100 100	GP44
100 101	GP45
100 110	GP46
100 111	GP47
101 000	GP50
101 001	GP51
101 010	GP52
101 011	GP53
101 100	GP54
101 101	GP55
101 110	GP56
101 111	GP57
Else	Reserved

Note: For GPIO Power Plan, please refer to Table 6-2.

CONFIDENTIAL

9. Functional Description

9.1 Clock

IT8625 supports three clock inputs, PCICLK/ESPICLK, and CLKIN_L.
PCICLK supports 33.3MHz/24MHz and is required for LPC I/F.
ESPICLK supports 20MHz~60MHz and is required for eSPI I/F.
CLKIN_L supports 24MHz/48MHz.
For the CLKIN_L free clock setting, please refer to Internal clk_in Control Table below for the detail.

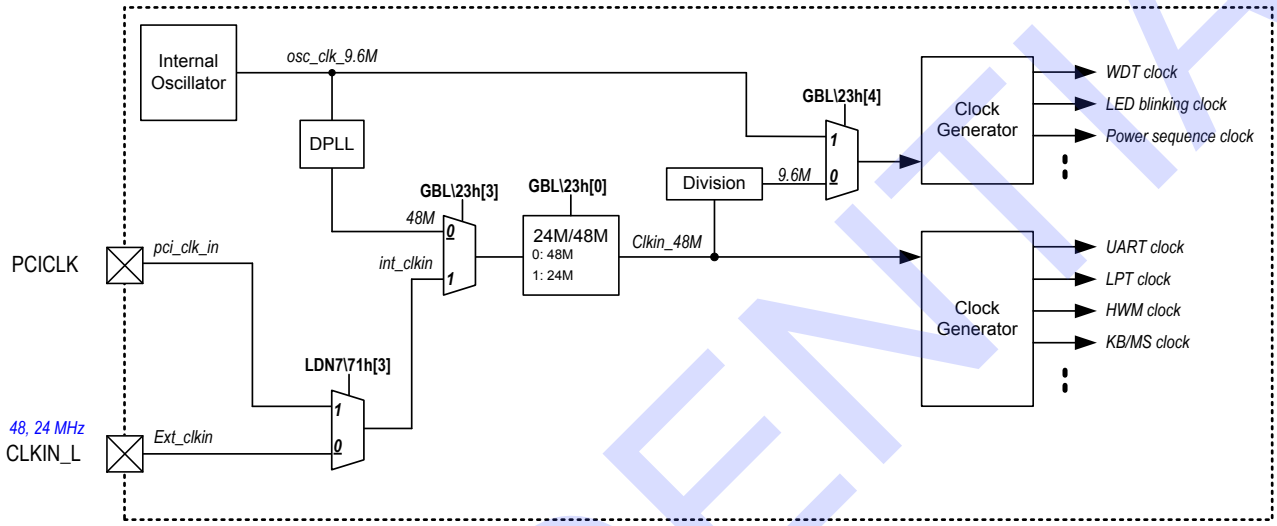

Table 9-1 LPC Mode Internal clk_in Control Table

	LPC Mode		Registers Setting		
	PCICLK	CLKIN_L	LDN7 71h[3]	GBL 23h[3]	GBL 23h[0]
CLKIN_L Free	33.3MHz	NC	X	0	0
	25MHz	NC	X	0	0
	19.2MHz	NC	X	0	0
	24MHz	NC	X	0	0
	24MHz	NC	1	1	1
Using CLKIN_L	X	24MHz	0	1	1
	X	48MHz	0	1	0

Note:
1. X: Don't care
2. NC: No CLKIN input. CLKIN pin pull-down recommanded. Don't make the CLKIN pin floating.

CONFIDENTIAL

9.2 LPC Interface

The IT8625E supports the peripheral side of the LPC I/F as described in the LPC Interface Specification Rev.1.1. In addition to the required signals (LAD3-0, LFRAME#, LRESET#, LCLK (the same as PCICLK.)), the IT8625E also supports LDRQ#, SERIRQ and PME#.

9.2.1 LPC Transactions

The IT8625E supports the required transfer cycle types described in the LPC I/F specification. I/O read and I/O write cycles are used for the programmed I/O cycles. DMA read and DMA write cycles are used for DMA cycles. All of these cycles are characteristic of the single byte transfer.

For LPC host I/O read or write transactions, the Super I/O module processes a positive decoding, and the LPC interface can respond to the result of the current transaction by sending out SYNC values on LAD[3:0] signals or leave LAD[3:0] tri-state depending on its result.

For DMA read or write transactions, the LPC interface will react according to the DMA requests from the DMA devices in the Super I/O modules, and decide whether to ignore the current transaction or not.

The ECP isan 8-bit DMA device, so if the LPC Host initializes a DMA transaction with data size of 16/32 bits, the LPC interface will process the first 8-bit data and respond with an SYNC ready (0000b) which will terminate the DMA burst. The LPC interface will then re-issue another LDRQ# message to assert DREQn after finishing the current DMA transaction.

9.2.2 LDRQ# Encoding

The Super I/O module provides oneDMA device, the ECP. The LPC Interface provides LDRQ# encoding to reflect the DREQ[3:0] status. Two LDRQ# messages or different DMA channels may be issued back-to-back to trace DMA requests quickly. Nevertheless, four PCI clocks will be inserted between two LDRQ# messages of the same DMA channel to guarantee that there are at least 10 PCI clocks for one DMA request to change its status. (The LPC host will decode these LDRQ# messages, and send those decoded DREQn to the legacy DMA controller which runs at 4 MHz or 33/8 MHz).

CONFIDENTIAL

9.3 The Enhanced Serial Peripheral Interface (eSPI)

9.3.1 Overview

The Enhanced Serial Peripheral Interface (eSPI) is basically an LPC replacement, and it has more benefits such as low voltage level, low power, higher bandwidth, pin-count saving, etc.

9.3.2 Features

- Compatible with the eSPI specification V1.0
- Supports Peripheral Channel only for Short I/O and Short Memory transactions
- Supports OOB Message Channel only for Temperature and PECI
- Supports VW IRQ/System event
- Supports eSPI 20MHz to 66MHz

9.3.3 Function Description

9.3.3.1 Peripheral Channel

IO supports legacy LPC transactions over the Peripheral Channel. Short I/O transactions (PUT_IORD_SHORT and PUT_IOWR_SHORT) are used to access PNPCFG and Logical Devices. The length of short I/O transactions is 1, 2 or 4 bytes, and it is recommended to use the short I/O commands with 1-byte data only. Short Memory transactions (PUT_MEMRD32_SHORT and PUT_MEMWR32_SHORT) or transactions with memory access cycle types (Memory Read 32 and Memory Write 32) are used to access the HWM module.

- Supports port 80h read via parallel port and via serial ports.

The PUT_IORD_SHORT, PUT_IOWR_SHORT, PUT_MEMRD32_SHORT and PUT_MEMWR32_SHORT commands are supported.

CONFIDENTIAL

9.3.3.2 OOB Message Channel

The OOB channel is used to handle transactions between the OOB processor and SIO. SIO is able to initiate an upstream OOB message transaction for reading of PCH HW information, including temperature and PECI, using messages with predefined slave address and command codes.

The GET_OOB and PUT_OOB commands are supported.

- **Initiate Tempeturate or PECI through eSPI OOB Message Channel**

SIO is able to initiate a posted OOB message transaction over the eSPI bus. The sequence is listed below.

Figure 9-1 Flow of Initiating an OOB Message Transcation for Temperature over eSPI Bus
Reserved

Figure 9-2 Flow of Initiating an OOB Message Transcation for PECI over eSPI Bus
Reserved

- **Receive a Posted Transaction through eSPI OOB Message Channel**

SIO is able to receive a posted OOB message transaction for Temperature or PEIC over the eSPI bus. The sequence is listed below.

Figure 9-3 Flow of Receiving an OOB Message Transcation for Temperature over eSPI Bus
Reserved

Figure 9-4 Flow of Receiving an OOB Message Transcation for PECI over eSPI Bus
Reserved

CONFIDENTIAL

9.3.3.3 Virtual Wires Channel

The Virtual Wires channel is used to communicate the state of sideband pins tunneled through eSPI as in-band messages. Serial IRQ interrupts are also communicated through this channel as in-band messages.
.

- Maximum virtual wire count supported: 7
- Supports interrupt event: IRQ0 – IRQ15
- Supports system event

- **Receive an In-band Message through eSPI Virtual Wires Channel**

SIO is able to receive an in-band message through the eSPI Virtual Wires channel.

- **Platform Reset**

Platform Reset event is communicated through the PLTRST# virtual wire. It also can be asserted from LRESET# if Platform Reset Control is set. The Platform Reset event is used in resetting the circuits listed below.

Figure 9-5 Scheme of Platform Reset

Reserved

CONFIDENTIAL

9.4 Serialized IRQ

The IT8625E follows the specification of Serialized IRQ Support for PCI System, Rev. 6.0, September 1, 1995, to support the serialized IRQ feature, and is able to interface most PC chipsets. The IT8625E encodes the parallel interrupts to an SERIRQ which will be decoded by the chipset with built-in Interrupt Controllers (two 8259 compatible modules).

9.4.1 Continuous Mode

When in the Continuous mode, the SIRQ host initiates the Start frame of each SERIRQ sequence after sending out the Stop frame by itself. (The next Start frame may or may not begin immediately after the turn-around state of the current Stop frame.) The SERIRQ is always activated and SIRQ host keeps polling all the IRQn and system events, even though no IRQn status is changed. The SERIRQ enters the Continuous mode following a system reset.

9.4.2 Quiet Mode

In the Quiet mode, when the situation that one SIRQ Slave detects its input IRQn/events have been changed happens, it may initiate the first clock of Start frame. The SIRQ host can then follow to complete the SERIRQ sequence. In the Quiet mode, the SERIRQ has no activity following the Stop frame until it is initiated by SIRQ Slave, which implies low activity = low mode power consumption.

9.4.3 Waveform Samples of SERIRQ Sequence

Figure 9-6. Start Frame Timing

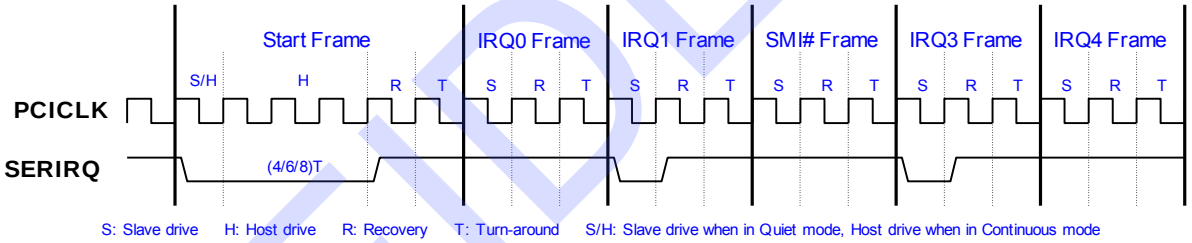

Figure 9-7. Stop Frame Timing

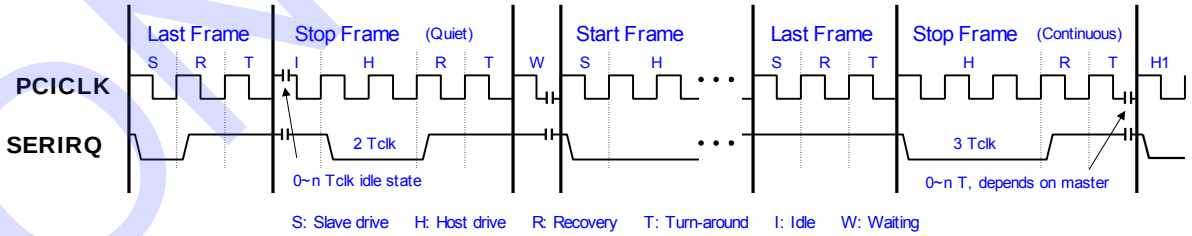

CONFIDENTIAL

9.4.4 SERIRQ Sampling Slot

Slot Number	IRQn/ Events	#of Clocks Past Start	IT8625E
1	IRQ0	2	-
2	IRQ1	5	Y
3	SMI#	8	Y
4	IRQ3	11	Y
5	IRQ4	14	Y
6	IRQ5	17	Y
7	IRQ6	20	Y
8	IRQ7	23	Y
9	IRQ8	26	Y
10	IRQ9	29	Y
11	IRQ10	32	Y
12	IRQ11	35	Y
13	IRQ12	38	Y
14	IRQ13	41	-
15	IRQ14	44	Y
16	IRQ15	47	Y
17	IOCHCK#	50	-
18	INTA#	53	-
19	INTB#	56	-
20	INTC#	59	-
21	INTD#	62	-
32:22	Unassigned	95 / 65	-

CONFIDENTIAL

9.5 General Purpose I/O

The IT8625E provides eightsets of flexible I/O control and special functions for the system designers via a set of multi-functional General Purpose I/O pins (GPIO). The GPIO functions will not be performed unless the related enable bits of the GPIO Multi-function Pin Selection registers (Index 25h, 26h, 27h, 28h and 29h of the Global Configuration Registers) are set. The GPIO functions include the simple I/O function and alternate function, and the function selection is determined by the Simple I/O Enable Registers (LDN=07h, Index=C0h, C1h, C2h, C3h and C4h).

The Simple I/O function includes a set of registers, which correspond to the GPIO pins. All control bits are divided into eightregisters. The accessed I/O ports are programmable and are eightconsecutive I/O ports (Base Address+0, Base Address+1, Base Address+2, Base Address+3, Base Address+4, Base Address+5, Base Address+6, Base Address+7). Base Address is programmed on the registers of GPIO Simple I/O Base Address LSB and MSB registers (LDN=07h, Index=62h and 63h).

The Alternate function provides several special functions for users, including Watch Dog Timer, SMI# output routing, External Interrupt routing, Panel Button De-bounce, Keyboard Lock input routing, LED Blinking, Thermal output routing, and Beep output routing. The last two are sub-functions of the Hardware Monitor. (GPIO set6,7,8, 9, A support the simple I/O function only.)

The Panel Button De-bounce is an input function. After it is enabled, a related status bit will be set when an active low pulse is detected on the GPIO pin. The status bits will be cleared by writing 1's to them. Panel Button De-bounce Interrupt will be issued if any of the status bit is set. However, the newly set status will not issue another interrupt unless the previous status bit is cleared before being set.

The Key Lock function locks the keyboard to inhibit the keyboard interface. The wayof programming is to set bit 2 on the register Index F0h of KBC(Keyboard) (LDN=5). The pin location mapping, Index F7h also must be programmed correctly.

The Blinking function provides a low frequency blink output. By connecting to some external components, it can be used to control a power LED. There are several frequencies for selection.

The Watch Dog Timer (WDT) function is constituted by a time counter, a time-out status register, and the timer reset control logic. The time-out status bit may be mapped to an interrupt or KRST# through the WDT configuration register. The WDT has a programmable time-out ranging from 1 to 65535 minutes or 1 to 65535 seconds. The unit, either a minute or a second, is also programmable via bit7 of the WDT configuration register. When the WDT Time-out Value register is set to a non-zero value, the WDT loads the value and begin counting down from the value. When the value reaches to 0, the WDT status register will be set. There are several system events including a CIR interrupt, a Keyboard Interrupt, a Mouse Interrupt that can reload the non-zero value into the WDT. The effect on the WDT for each of the events may be enabled or disabled through bits in the WDT control register. No matter what the value in the time counter is, the host may force a time-out to occur by writing a "1" to bit 1 of the WDT configuration register.

The External Interrupt routing function provides a useful feature for motherboard designers. Through this function, the parallel interrupts of other on-board devices can be easily re-routed into the Serial IRQ.

The SMI# is a non-maskable interrupt dedicated to the transparent power management. It consists of different enabled interrupts generated from each of the functional blocks in the IT8625E. The interrupts are redirected as the SMI# output via the SMI# Control Register 1 and SMI# Control Register 2. The SMI# Status Register 1 and 2 are used to read the status of the SMI input event. All the SMI# Status Register bits can be cleared when the corresponding source events become invalidated. These bits can also be cleared by writing 1 to bit 7 of SMI# Control Register 2 no matter whether the events of the corresponding sources are invalidated or not. The SMI# events can be programmed as the pulse mode or level mode whenever an SMI# event occurs. The logic equation of the SMI# event is described below:

SMI# event = (EN_S1IRQ and S1IRQ) or (EN_S2IRQ and S2IRQ) or (EN_PIRQ and PIRQ) or (EN_EC and EC_SMI) or (EN_PBDIRQ or PBDIRQ) or (EN_KIRQ and KIRQ) or (EN_MIRQ and MIRQ) or (EN_CIR and

CONFIDENTIAL

CIR_IRQ) or (EN_WDT and WDT_IRQ)

Figure 9-8. General Logic of GPIO Function

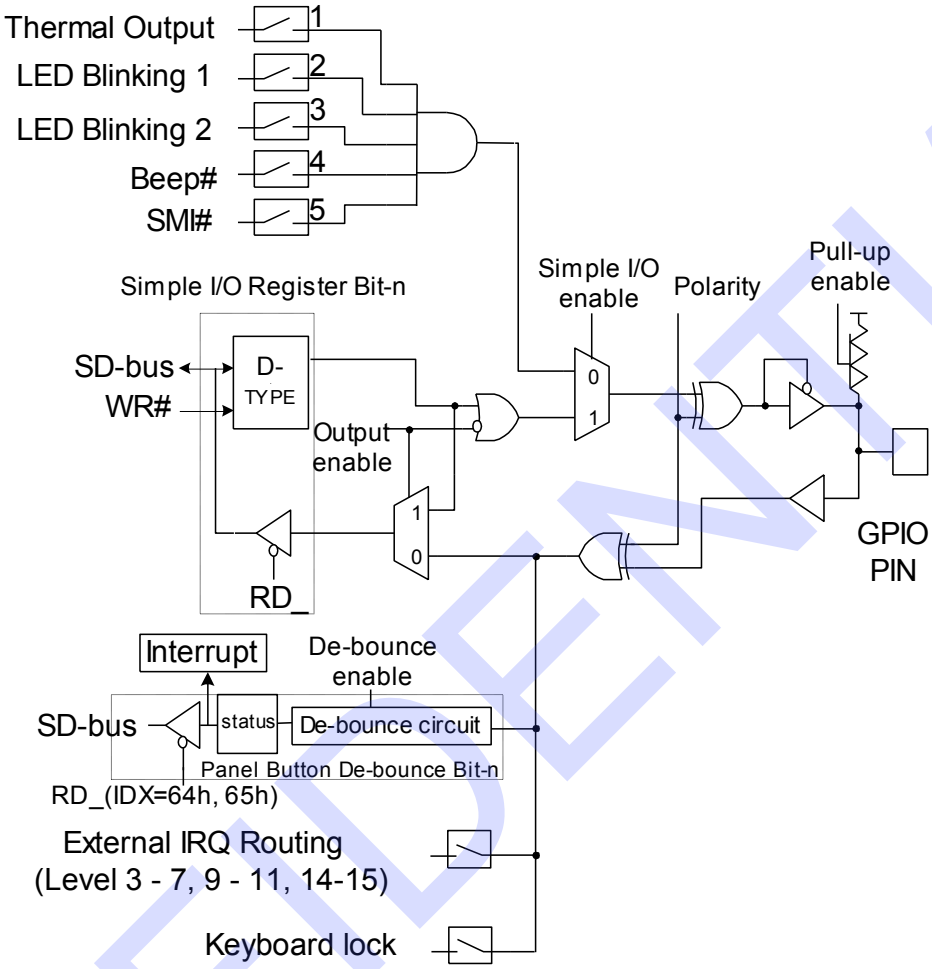

CONFIDENTIAL

9.6 Advanced Power Supply Control and Power Management Event (PME#)

The circuit for advanced power supply control (APC) provides power-up events including Keyboard, Mouse, CIR and RI#. When any of these events is activated, PWRON# will perform a low state until AVCC3 is switched to the ON state.
Here are the details of these events:

1. Detection of KCLK edge or special pattern of KCLK and KDAT. The special pattern of KCLK means pressing pre-set key string sequentially, and KDAT means pressing pre-set keys simultaneously.
2. Detection of MCLK edge or special pattern of MCLK and MDAT. The special pattern of MCLK and MDAT means clicking on any mouse button twice sequentially.
3. Receiving CIR pattern matches the previous one stored at the APC/PME Special Code Index and Data Register.
4. Detection of RI# falling edge.

The PANSWH# and PSON# are especially designed for the system. PANSWH# serves as a main power switch input, which is wire-AND to the APC output PWRON#. PSON# is the ATX Power control output, which is a power-failure gating circuit. The power-failure gating circuit is responsible for gating the SUSB#input until PANSWH# becomes active when the 3VSB is switched from OFF to ON.

The power-failure gating circuit can be disabled by setting the APC/PME Control Register 2 (LDN=04h, index F4h, bit 5). The gating circuit also provides an auto-restore function. After bit 5 of PCR1 is set, the previous PSON# state will be restored when the 3VSB is switched from OFF to ON.

The Mask PWRON# Activation bit (bit 4 of PCR 1) is used to mask all power-up events except switch-on event when the 3VSB state is just switched from FAIL to OFF. In other words, when this bit is set and the power state is switched from FAIL to OFF, the only validated function is PANSWH#.

The PCR2 register is responsible for determining the keyboard power-up event and APC conditions. Bit 4 is used to mask the PANSWH# power-on event on the PWRON# pin. To enable this bit, the keyboard power-up event should be enabled and set by (1) pressing pre-set key string sequentially or (2) stroking pre-set keys simultaneously. The APC/PME# special code index and data registers are used to specify the special key codes in the special power-up events of (1) pressing pre-set key string sequentially or (2) stroking pre-set keys simultaneously.

A CIR event is generated if the input CIR RX pattern is the same as that previously stored at PME Special Code Index and Data Registers (LDN=04h, Index=F5h and F6h). The total maximum physical codes are nineteen bytes (from Index 20h to 32h). The first byte (Index 20h) is used to specify the pattern length (in bytes). Bit 7-4are used when AVCC3 is on and Bit 3-0 when AVCC3 goes OFF. The length represented in each 4-bit will be incremented by 3 internally as the actual length is to be compared. For most of the CIR protocols, the first several bytes are always the same for each key (or pattern). The differences are always in the last several bytes. Thus, the system designer can program the IT8625E to generate a CIR PME# event as any keys when AVCC3 is ON and a special key (i.e. POWER-ON) when AVCC3 is OFF.

All APC registers (Index=F0h, F2h, F4h, F5h, F6h, FAh and FBh) are powered by back-up power (VBAT) when 3VSB is OFF.

PME# is used to wake up the system from low-power states (S1-S5).There will be fiveevents of APC to generate PME#. A falling edge on these pins issues PME# events if the enable bits are set.

CONFIDENTIAL

9.7 Environment Controller

The Environment Controller (EC), built in the IT8625E, includes sevenvoltage inputs, three temperature sensor inputs, six FAN Tachometer inputs, and sixsets of advanced FAN Controllers. The EC monitors the hardware environment and implements the environmental control for personal computers.

The IT8625E contains an 8-bit ADC (Analog-to-Digital Converter), which is responsible for monitoring the voltages and temperatures. The ADC converts the analog inputs ranging from 0V to 3.3V to 8-bit digital byte. With additional external components, the analog inputs can be made to monitor different voltage ranges, in addition to monitoring the fixed input range of 0V to 3.3V.Through external thermistors or thermal diodes, the temperature sensor inputs can be converted into 8-bit digital byte, enabling the sensor inputs to monitor the temperature of various components. A built-in ROM is also provided to adjust the non-linear characteristics of thermistors.

FAN Tachometer inputs are digital inputs with an acceptable range from 0V to 5V, and are responsible for measuring the FAN's Tachometer pulse periods.

The EC of the IT8625E provides multiple internal registers and an interrupt generator for programmers to monitor the environment and control the FANs. Both of the LPC Bus and Serial Bus interfaces are supported to accommodate the needs for various applications.

9.7.1 Interface

LPC Bus: The Environment Controller of the IT8625E decodes two addresses.

Table 9-2. Address Map on LPC Bus

Register or Port	Address
Address register of EC	Base+05h
Data register of EC	Base+06h

Note 1: The Base Address is determined by the Logical Device configuration registers of the Environment Controller (LDN=04h, registers index=60h, 61h).

To access an EC register, the address of the register is written to the address port (Base+05h). Read or write data from or to that register via data port (Base+06h). For the registers with the same Index, the data can be read respectively by the BANK_SEL register (refer to section 9.5.2.2.7).

9.7.2 Registers

Table belowlists all EC (Environment Controller) registers. Some of them such as index 10h~12h, etc. have no default values and these settings have impact on VIN, TEMP, and FAN's detection. Therefore, the mistaken action might happen during the detecting process. In order to prevent these unexpected behaviors happening, it is recommended that the related interrupts or SMI mask registers (04h~09h) be enabled for the unused hardware monitor.

9.7.2.1 Address Port (Base+05h, Default=00h)

Bit	Description
7	**Outstanding; read only** This bit is set when a data write is performed to Address Port via the LPC Bus.
6-0	**Index** Internal Address of RAM and Registers.

CONFIDENTIAL

Note: The BANK_SEL register (Index06h) must be set to Bank 0 when the following registers are to be accessed.

Table 9-3. Environment Controller Registers (Bank 0)

Index	R/W	Default	Registers or Action
00h	R/W	18h	Configuration Register
01h	R	00h	Interrupt Status Register1
02h	R	00h	Interrupt Status Register2
03h	R	00h	Interrupt Status Register3
04h	R/W	00h	SMI# Mask Register1
05h	R/W	00h	SMI# Mask Register2
06h	R/W	00h	SMI# Mask Register3
07h	R/W	00h	Interrupt Mask Interrupt Mask 1
08h	R/W	00h	Interrupt Mask Interrupt Mask 2
09h	R/W	C0h	Interrupt Mask Interrupt Mask 3
0Ah	R/W	44h	Interface Selection Register
0Bh	R/W	00h	General Control Register 1
0Ch	R/W	00h	General Control Register 2
0Dh	R	-	Fan Tachometer 1 Reading Register
0Eh	R	-	Fan Tachometer 2 Reading Register
0Fh	R	-	Fan Tachometer 3 Reading Register
10h	R/W	-	Fan Tachometer 1 Limit Register
11h	R/W	-	Fan Tachometer 2 Limit Register
12h	R/W	-	Fan Tachometer 3 Limit Register
13h	R/W	00h	Fan Controller Main Control Register
14h	R/W	40h	FAN_CTL Control Register
15h	R/W	00h	FAN_CTL1 PWM Control Register
16h	R/W	00h	FAN_CTL2 PWM Control Register
17h	R/W	00h	FAN_CTL3 PWM Control Register
18h	R	-	Fan Tachometer 1 Extended Reading Register
19h	R	-	Fan Tachometer 2 Extended Reading Register
1Ah	R	-	Fan Tachometer 3 Extended Reading Register
1Bh	R/W	-	Fan Tachometer 1 Extended Limit Register
1Ch	R/W	-	Fan Tachometer 2 Extended Limit Register
1Dh	R/W	-	Fan Tachometer 3 Extended Limit Register
1Eh	R/W	00h	FAN_CTL4 PWM Control Register
1Fh	R/W	00h	FAN_CTL5 PWM Control Register
20h	R	-	VIN0 Voltage Reading Register
21h	R	-	VIN1 Voltage Reading Register
22h	R	-	VIN2 Voltage Reading Register

CONFIDENTIAL

Index	R/W	Default	Registers or Action
23h	R	-	VIN3 Voltage Reading Register
24h	R	-	VIN4 Voltage Reading Register
25h	R	-	VIN5 Voltage Reading Register
26h	R	-	VIN6 Voltage Reading Register
28h	R	-	VBAT Voltage Reading Register
29h	R	-	TMPIN1 Temperature Reading Register
2Ah	R	-	TMPIN2 Temperature Reading Register
2Bh	R	-	TMPIN3 Temperature Reading Register
2Ch	R	-	TMPIN4 Temperature Reading Register
2Dh	R	-	TMPIN5 Temperature Reading Register
2Eh	R	-	TMPIN6 Temperature Reading Register
2Fh	R	-	AVCC3 Voltage Reading Register
30h	R/W	-	VIN0 High Limit Register
31h	R/W	-	VIN0 Low Limit Register
32h	R/W	-	VIN1 High Limit Register
33h	R/W	-	VIN1 Low Limit Register
34h	R/W	-	VIN2 High Limit Register
35h	R/W	-	VIN2 Low Limit Register
36h	R/W	-	VIN3 High Limit Register
37h	R/W	-	VIN3 Low Limit Register
38h	R/W	-	VIN4 High Limit Register
39h	R/W	-	VIN4 Low Limit Register
3Ah	R/W	-	VIN5 High Limit Register
3Bh	R/W	-	VIN5 Low Limit Register
3Ch	R/W	-	VIN6 High Limit Register
3Dh	R/W	-	VIN6 Low Limit Register
3Eh	R/W	-	Internal 3VSB High Limit Register
3Fh	R/W	-	Internal 3VSB Low Limit Register
40h	R/W	-	TMPIN1 High Limit Register
41h	R/W	-	TMPIN1 Low Limit Register
42h	R/W	-	TMPIN2 High Limit Register
43h	R/W	-	TMPIN2 Low Limit Register
44h	R/W	-	TMPIN3 High Limit Register
45h	R/W	-	TMPIN3 Low Limit Register
46h	R/W	-	TMPIN4 High Limit Register
47h	R/W	-	TMPIN4 Low Limit Register
50h	R/W	00h	ADC Voltage Channel Enable Register
51h	R/W	00h	ADC Temperature Channel Enable Register
52h	R/W	7Fh	TMPIN1 Thermal Output Limit Register

CONFIDENTIAL

Index	R/W	Default	Registers or Action
53h	R/W	7Fh	TMPIN2 Thermal Output Limit Register
54h	R/W	7Fh	TMPIN3 Thermal Output Limit Register
55h	R/W	40h	ADC Temperature Extra Channel Enable Register
56h	R/W	00h	TMPIN1 Zero Degree Adjust Register
57h	R/W	00h	TMPIN2 Zero Degree Adjust Register
58h	R	90h	ITE Vendor ID Register
59h	R/W	00h	TMPIN3 Zero Degree Adjust Register
5Ah	R/W	00h	TMPIN4 Zero Degree Adjust Register
5Bh	R	12h	Core ID Register
5Ch	R/W	60h	Beep Event Enable Register
5Dh	R/W	00h	Beep Frequency Divisor of Fan Event Register
5Eh	R/W	00h	Beep Frequency Divisor of Voltage Event Register
5Fh	R/W	00h	Beep Frequency Divisor of Temperature Event Register
60h	R/W	7Fh	FAN_CTL1 SmartGuardian Automatic Mode Temperature Limit of OFF Register
61h	R/W	7Fh	FAN_CTL1 SmartGuardian Automatic Mode Temperature Limit of Fan Start Register
62h	R/W	7Fh	FAN_CTL1 SmartGuardian Automatic Mode Temperature Limit of Full Speed Register
63h	R/W	80h	FAN_CTL1 SmartGuardian Automatic Mode Start PWM Register
64h	R/W	00h	FAN_CTL1 SmartGuardian Automatic Mode Control Register
65h	R/W	7Fh	FAN_CTL1 SmartGuardian Automatic Mode △-TemperatureRegister
66h	R/W	0Fh	FAN_CTL1 Target Zone Register
68h	R/W	7Fh	FAN_CTL2 SmartGuardian Automatic Mode Temperature Limit of OFF Register
69h	R/W	7Fh	FAN_CTL2 SmartGuardian Automatic Mode Temperature Limit of Fan Start Register
6Ah	R/W	7Fh	FAN_CTL2 SmartGuardian Automatic Mode Temperature Limit of Full Speed Register
6Bh	R/W	80h	FAN_CTL2 SmartGuardian Automatic Mode Start PWM Register
6Ch	R/W	00h	FAN_CTL2 SmartGuardian Automatic Mode Control Register
6Dh	R/W	7Fh	FAN_CTL2 SmartGuardian Automatic Mode △-TemperatureRegister
6Eh	R/W	0Fh	FAN_CTL2 Target Zone Register
70h	R/W	7Fh	FAN_CTL3 SmartGuardian Automatic Mode Temperature Limit of OFF Register
71h	R/W	7Fh	FAN_CTL3 SmartGuardian Automatic Mode Temperature Limit of Fan Start Register
72h	R/W	7Fh	FAN_CTL3SmartGuardian Automatic Mode Temperature Limit of Full Speed Register
73h	R/W	80h	FAN_CTL3 SmartGuardian Automatic Mode Start PWM Register
74h	R/W	00h	FAN_CTL3 SmartGuardian Automatic Mode Control Register

CONFIDENTIAL

Index	R/W	Default	Registers or Action
75h	R/W	7Fh	FAN_CTL3 SmartGuardian Automatic Mode △-TemperatureRegister
76h	R/W	0Fh	FAN_CTL3 Target Zone Register
78h	R/W	7Fh	FAN_CTL4 SmartGuardian Automatic Mode Temperature Limit of OFF Register
79h	R/W	7Fh	FAN_CTL4 SmartGuardian Automatic Mode Temperature Limit of Fan Start Register
7Ah	R/W	7Fh	FAN_CTL4 SmartGuardian Automatic Mode Temperature Limit of Full Speed Register
7Bh	R/W	80h	FAN_CTL4 SmartGuardian Automatic Mode Start PWM Register
7Ch	R/W	00h	FAN_CTL4 SmartGuardian Automatic Mode Control Register
7Dh	R/W	7Fh	FAN_CTL4 SmartGuardian Automatic Mode △-TemperatureRegister
7Eh	R/W	0Fh	FAN_CTL4 Target Zone Register
80h	R	-	Fan Tachometer 4 Reading LSB Register
81h	R	-	Fan Tachometer 4 Reading MSB Register
82h	R	-	Fan Tachometer 5 Reading LSB Register
83h	R	-	Fan Tachometer 5 Reading MSB Register
84h	R/W	-	Fan Tachometer 4 Limit LSB Register
85h	R/W	-	Fan Tachometer 4 Limit MSB Register
86h	R/W	-	Fan Tachometer 5 Limit LSB Register
87h	R/W	-	Fan Tachometer 5 Limit MSB Register
88h	R/W	00h	External Temperature Sensor Host Status Register
89h	R/W	00h	External Temperature Sensor Host Target Address Register
8Ah	R/W	00h	External Temperature Sensor Host Write Length Register
8Bh	R/W	00h	External Temperature Sensor Host Read Length Register
8Ch	R/W	00h	External Temperature Sensor Host Command (Write Data 1) Register
8Dh	R/W	00h	External Temperature Sensor Write Data (2-8) Register
8Eh	R/W	00h	External Temperature Sensor Host Control Register
8Fh	R	--h	External Temperature Sensor Read Data (1-16) Register
90h	R/W	00h	TMPIN5 Zero Degree Adjust Register
91h	R/W	00h	TMPIN6 Zero Degree Adjust Register
92h	R/W	00h	FAN_CTL6 PWM Control Register
93h	R/W	00h	Fan Tachometer 6 Reading LSB Register
94h	R/W	FFh	Fan Tachometer 6 Reading MSB Register
95h	R/W	--h	PROCHOT# Control Register
96h	R/W	--h	PROCHOT# Temperature Limit Register
98h	R/W	00000b	PCH/SB-TSI Host Status Register
99h	R/W	00h	PCH/SB-TSI Host Target Address Register
9Ch	R/W	00h	PCH/SB-TSI Host Command Register
9Dh	R/W	--h	PCH/SB-TSI Write Data Register
9Eh	R/W	00h	PCH/SB-TSI Host Control Register

CONFIDENTIAL

Index	R/W	Default	Registers or Action
9Fh	R/W	--h	PCH/SB-TSI Read Data (1-16) Register
A0h	R/W	7Fh	FAN_CTL5 SmartGuardian Automatic Mode Temperature Limit of OFF Register
A1h	R/W	7Fh	FAN_CTL5 SmartGuardian Automatic Mode Temperature Limit of Fan Start Register
A2h	R/W	7Fh	FAN_CTL5 SmartGuardian Automatic Mode Temperature Limit of Full Speed Register
A3h	R/W	80h	FAN_CTL5 SmartGuardian Automatic Mode Start PWM Register
A4h	R/W	00h	FAN_CTL5 SmartGuardian Automatic Mode Control Register
A5h	R/W	7Fh	FAN_CTL5 SmartGuardian Automatic Mode △-TemperatureRegister
A6h	R/W	0Fh	FAN_CTL5 Target Zone Register
A8h	R/W	7Fh	FAN_CTL6 SmartGuardian Automatic Mode Temperature Limit of OFF Register
A9h	R/W	7Fh	FAN_CTL6 SmartGuardian Automatic Mode Temperature Limit of Fan Start Register
AAh	R/W	7Fh	FAN_CTL6 SmartGuardian Automatic Mode Temperature Limit of Full Speed Register
ABh	R/W	80h	FAN_CTL6 SmartGuardian Automatic Mode Start PWM Register
ACh	R/W	00h	FAN_CTL6 SmartGuardian Automatic Mode Control Register
ADh	R/W	7Fh	FAN_CTL6 SmartGuardian Automatic Mode △-TemperatureRegister
AEh	R/W	0Fh	FAN_CTL6 Target Zone Register
B2h	R/W	-	Fan Tachometer 6 Limit LSB Register
B3h	R/W	-	Fan Tachometer 6 Limit MSB Register
B4h	R/W	-	TMPIN5 High Limit Register
B5h	R/W	-	TMPIN5 Low Limit Register
B6h	R/W	-	TMPIN6 High Limit Register
B7h	R/W	-	TMPIN6 Low Limit Register
B8h	R/W	-	Second SMBUS MxM Address Register
B9h	R/W	-	Second SMBUS MxM Command Register
C0h	R/W	-	Vitual Wire OOB Control Register
C1h	R/W	-	Vitual Wire GET_OOB Length Register
C2h	R	-	Vitual Wire PUT_OOB Length Register
C3h	R/W	-	Vitual Wire GET_OOB Write Data Register
C4h	R	-	Vitual Wire PUT_OOB Read Data Register

CONFIDENTIAL

Note: The BANK_SEL register (Index06h) must be set to Bank 1 when the following registers.are to be accessed.

Table 9-4. Environment Controller Registers (Bank 1)

Index	R/W	Default	Registers or Action
Bank1, C0h	R/W	00h	PECI and SB-TSI Control Register
Bank1, C1h	R	--h	Integer Value of SB-TSI Temperature Register
Bank1, C2h	R	--h	Fractional Value of SB-TSI Temperature Register
Bank1, D0h~D8h	R	--h	PCHSM-Link Byte 0 ~ 8 Reading Register
Bank1 D9h~DCh	R	--h	PCHSM-Link Byte 9 ~ 12 Reading Register
Bank1, E0h~FFh	R	--h	PECI Processor 1~8 Domain 0,1 Temperature Reading

Note:
The BANK_SEL register (Index06h) must be set to Bank 2 when the following registers.are to be accessed.

Table 9-5. Environmen Controller Registers (Bank 2)Index	R/W	Default	Registers or Action
Bank2, 10h~1Ch	R/W	--h	Fan1 Extra Vector A, B, C
Bank2, 20h~2Ch	R/W	--h	Fan2 Extra Vector A, B, C
Bank2, 30h~3Bh	R/W	--h	Fan3 Extra Vector A, B, C
Bank2 3Ch	R/W	--h	PCH Temperature over eSPI OOB Control Register
Bank2, 3Eh	R/W	--h	PROCHOT# Control Register
Bank2, 40h~4Ch	R/W	--h	Fan4 Extra Vector A, B, C
Bank2, 4Dh[6]	R/W	H	Highest Mode Enable Register
Bank2, 50h~5Ch	R/W	--h	Fan5 Extra Vector A, B, C
Bank2, 5Dh	R/W	--h	Coolsense Enable for TMPIN1/2
Bank2, 5Eh	R/W	--h	Coolsense Enable for TMPIN3/4

CONFIDENTIAL

Table 9-5. Environment Controller Registers (Bank 2)Index	R/W	Default	Registers or Action
Bank2, 5Fh	R/W	--h	Coolsense Enable for TMPIN5/6
Bank2, 60h~6Ch	R/W	--h	Fan6 Extra Vector A, B, C
Bank2, 70h	R/W	-h	PECI Bridge Write Address Register
Bank2, 71h	R/W	-h	PECI Bridge Read Address Register
Bank2, 72h	R/W	00h	PECI Bridge Control Register
Bank2, 73h	R	-h	PECI Bridge Status Register
Bank2, 74h	R	-h	PECI Bridge Error Code Register
Bank2, 75h	R	-h	PECI Bridge CPU0 Temperature Register
Bank2, 76h	R	-h	PECI Bridge CPU1 Temperature Register
Bank2, 90h	R/W	80h	Start PWM Default Value to FAN1~6 Register
Bank2, 91h	R/W	-h	Coolsense Raw Data for TMPIN1
Bank2, 92h	R/W	-h	Coolsense Raw Data for TMPIN2
Bank2, 93h	R/W	-h	Coolsense Raw Data for TMPIN3
Bank2, 94h	R/W	-h	Coolsense Raw Data for TMPIN4
Bank2, 95h	R/W	-h	Coolsense Raw Data for TMPIN5
Bank2, 96h	R/W	-h	Coolsense Raw Data for TMPIN6

CONFIDENTIAL

9.7.2.2 General Register Description

9.7.2.2.1 Configuration Register (Index=00h, Default=18h)

Bit	R/W	Description
7	R/W	**Initialization** A "1" restores all registers to their individual default values, except the Serial Bus Address register. This bit clears itself when the default value is "0".
6	R/W	**Update VBAT Voltage Reading**
5	R/W	**COPEN# Cleared** Write "1" to clear COPEN#. **Note:** The COPEN# status register (Index 01h<bit4>) will be cleared when first writing this register and then reading Index 01h<bit4>.
4	R	**Read only; always "1"**
3	R/W	**INT_Clear** A "1" disables the SMI# and IRQ outputs while the contents of interrupt status bits remain unchanged.
2	R/W	**IRQ Enable** This bit is to enable the IRQ Interrupt output.
1	R/W	**SMI# Enable** A "1" enables the SMI# Interrupt output.
0	R/W	**Start** A "1" enables the startup of monitoring operations and a "0" sets the monitoring operation in the STANDBY mode.

9.7.2.2.2 Interrupt Status Register 1 (Index=01h, Default=00h)

Reading this register will clear itself following a read access.

Bit	R/W	Description
7	R	A "1" indicates the AVCC3 Count limit has been reached.
6	R	A "1" indicates the FAN_TAC5 Count limit has been reached.
5	R	A "1" indicates the FAN_TAC6 Count limit has been reached.
4	R	**COPEN# Status** A "1" indicates a Case Open event has occurred. **Note:** The COPEN# status register (Index 01h<bit4>) will be cleared when firstwritingIndex 00h<bit5>and then reading this register.
3-0	R	A "1" indicates the FAN_TAC4-1 Count limit has been reached.

9.7.2.2.3 Interrupt Status Register 2 (Index=02h, Default=00h)

Reading this register will clear itself after the read operation is completed.

Bit	R/W	Description
7	R	A "1" indicates a High or Low limit of Internal 3VSB has been reached.
6-0	R	A "1" indicates a High or Low limit of VIN6-0 has been reached.

CONFIDENTIAL

9.7.2.2.4 Interrupt Status Register 3 (Index=03h, Default=00h)

Reading this register will clear itself following a read access.

Bit	R/W	Description
7	R	A "1" indicates a PROCHOT# error occurs.
6	R	A "1" indicates aPCH/SB-TSIerror occurrs. For PCH/SB-TSI Interrupt & SMI# setting, please refer to Index0Bh[bit2, 1].
5-0	R	A "1" indicates a High or Low limit of Temperature 6-1 has been reached.

9.7.2.2.5 SMI# Mask Register 1 (Index=04h, Default=00h)

Bit	R/W	Description
7	R/W	A "1" disables the AVCC3 interrupt status bit for SMI#.
6	R/W	A "1" disables the FAN_TAC5 interrupt status bit for SMI#.
5	R/W	A "1" disables the FAN_TAC6 interrupt status bit for SMI#.
4	R/W	A "1" disables the Case Open Intrusion interrupt status bit for SMI#.
3-0	R/W	A "1" disables the FAN_TAC4-1 interrupt status bit for SMI#.

9.7.2.2.6 SMI# Mask Register 2 (Index=05h, Default=00h)

Bit	R/W	Description
7	R/W	A "1" disables the Internal 3VSB interrupt status bit for SMI#.
6-0	R/W	A "1" disables the VIN6-0 interrupt status bit for SMI#.

9.7.2.2.7 SMI# Mask Register 3 (Index=06h, Default=00h)

Bit	R/W	Description
7	R/W	A "1" disables the Temperature 6 interrupt status bit for SMI#.
6-5	R/W	**BANK Selection (BANK_SEL)** This register is for the registers with the same Index to read data respectively. 00b: Bank0, (Index 00h~FFh, default) 01b: Bank1, (Index D0h~DFh) 10b: Bank2, (Index 10h~6Fh) Others: Reserved
4-0	R/W	A "1" disables the Temperature 5-1 interrupt status bit for SMI#.

9.7.2.2.8 Interrupt Mask Register 1 (Index=07h, Default=00h)

Bit	R/W	Description
7	R/W	A "1" disables the AVCC3 interrupt status bit for IRQ.
6	R/W	A "1" disables the FAN_TAC5 interrupt status bit for IRQ.
5	R/W	A "1" disables the FAN_TAC6 interrupt status bit for IRQ.
4	R/W	A "1" disables the Case Open Intrusion interrupt status bit for IRQ.
3-0	R/W	A "1" disables the FAN_TAC4-1 interrupt status bit for IRQ.

9.7.2.2.9 Interrupt Mask Register 2 (Index=08h, Default=00h)

Bit	R/W	Description
7	R/W	A "1" disables the Internal 3VSB interrupt status bit for IRQ.
6-0	R/W	A "1" disables the VIN6-0 interrupt status bit for IRQ.

CONFIDENTIAL

9.7.2.2.10 Interrupt Mask Register 3 (Index=09h, Default=C0h)

Bit	R/W	Description
7-6	R/W	**Reserved**
5-0	R/W	A "1" disables the Temperature 6-1 interrupt status bit for IRQ.

9.7.2.2.11 Interface Selection Register (Index=0Ah, Default=44h)

Bit	R/W	Description
7	R/W	**Pseudo-EOC (End of Conversion of ADC)** A Pseudo-EOC bit can speed up the setup time of FAN speed in the SmartGuardian automatic mode. (Write 1 to the bit then write 0.)
6	R/W	**External Thermal Sensor SMB Host Enable** 0: SMB disabled 1: SMB enabled
5-4	R/W	**PECI Selection** 00: Disable 01: Reserved 10: PECI 11: Reserved When PECI and SB-TSI functions are used simultaneously, the clock pin of SB-TSI's I/F is SB-TSI_C2.
3	R/W	**PECI Host Controller Clock Selection** 0: 32MHz generated internally 1: 24MHz
2	R/W	**PECI Host Controller (Auto Speed No-change Tolerance) t-bit 1 Setting** 0: (2 host clocks) no less than1 host clock 1: (1 host clock) less than 1 host clock
1	R/W	**Reserved** This bit must be set to "0b"
0	R/W	**PECI2.0/3.0 Host Controller Hardware AWFCS Enable** 0: Disable 1: Enable

9.7.2.2.12 General Control Register 1 (Index=0Bh, Default=00h)

Bit	R/W	Description
7	R/W	**Virtual Temperature 6 Enable (Index 2Eh)** 0: Disable 1: Enable
6	R/W	**Virtual Temperature 5 Enable (Index 2Dh)** 0: Disable 1: Enable
5	R/W	**Virtual Temperature 3 Enable (Index 2Bh)** 0: Disable 1: Enable
4	R/W	**Reserved**
3	R/W	**FAN_TAC6 Enable** 0: Disable 1: Enable
2	R/W	A "1" enables the PCH/SB-TSIinterrupt status bit for SMI#.
1	R/W	A "1" enables the PCH/SB-TSIinterrupt status bit for IRQ.
0	R/W	**Reserved**

9.7.2.2.13 General Control Register 2 (Index=0Ch, Default=00h)

CONFIDENTIAL

Bit	R/W	Description
7	R/W	**TMPIN3 Enhanced Interrupt Mode Enable** 0: Original mode 1: The interrupt will be generated when TMPIN3 is higher than the high limit or lower than the low limit.
6	R/W	**TMPIN2 Enhanced Interrupt Mode Enable** 0: Original mode 1: The interrupt will be generated when TMPIN2 is higher than the high limit or lower than the low limit.
5	R/W	**FAN_TAC5 Enable** 0: Disable 1: Enable
4	R/W	**FAN_TAC4 Enable** 0: Disable 1: Enable
3	R/W	**TMPIN1 Enhanced Interrupt Mode Enable** 0: Original mode 1: The interrupt will be generated when TMPIN1 is higher than the high limit or lower than the low limit.
2	R/W	**TMPIN4 Enhanced Interrupt Mode Enable** 0: Original mode 1: The interrupt will be generated when TMPIN4 is higher than the high limit or lower than the low limit.
1	R/W	**Virtual Temperature 2 Enable (Index 2Ah)** 0: Disable 1: Enable
0	R/W	**Virtual Temperature 1 Enable (Index 29h)** 0: Disable 1: Enable

9.7.2.2.14 Fan Controller Main Control Register (Index=13h, Default=00h)

Bit	R/W	Description
7	R	**PECI Host Controller Transition Speed Mode Selection** 0: Auto 1: 666KHz
6-4	R/W	**FAN_TAC3-1 Enable** 0: Disable 1: Enable
3	R/W	**Full Speed Control of FAN_CTL Automatic Mode** 0: The full speeds of FAN_CTL1-6automatic mode are independent. 1: Both FAN_CTL1-6will enter their respective full speeds when the temperature exceeds the full Speed Temperature Limit.
2	R/W	**Reserved**
1	R/W	**TMPIN6 Enhanced Interrupt Mode Enable** 0: Original mode 1: The interrupt will be generated when TMPIN6 is higher than the high limit or lower than the low limit.
0	R/W	**TMPIN5 Enhanced Interrupt Mode Enable** 0: Original mode 1: The interrupt will be generated when TMPIN6 is higher than the high limit or lower than the low limit.

CONFIDENTIAL

9.7.2.2.15 ADC Temperature Channel Enable Register (Index=51h, Default=00h)

TMPIN3-1 cannot be enabled in both Thermal Resistor mode and Thermal Diode (Diode connected Transistor) mode.

Bit	R/W	Description
7-6	R/W	**Reserved**
5-3	R/W	TMPIN3-1 is enabled in the Thermal Resistor mode.
2-0	R/W	TMPIN3-1 is enabled in the Thermal Diode (or Diode-connected Transistor) mode.

9.7.2.2.16 TMPIN3-1 Thermal Output Limit Registers (Index=54h-52h, Default=7Fh)

Bit	R/W	Description
7-0	R/W	**Thermal Output Limit Value**

9.7.2.2.17 ADC Temperature Extra Channel Enable Register (Index=55h, Default=40h)

Bit	R/W	Description
7	R/W	**Virtual Temperature 4 Enable (Index 2Ch)** 0: Disable 1: Enable
6-4	R/W	**FAN_CTRL2 PWM Base Clock Select** 000: 48MHz (PWM Frequency=187.5kHz) 001: 24MHz (PWM Frequency=93.75kHz) 010: 12MHz (PWM Frequency=46.87kHz) 011: 8MHz (PWM Frequency=31.25kHz) 100: 6MHz (PWM Frequency=23.43kHz) (Default) 101: 3MHz (PWM Frequency=11.7kHz) 110: 1.5MHz (PWM Frequency=5.86kHz) 111: 51kHz (PWM Frequency=200Hz)
3	R/W	Reserved
2-0	R/W	VIN6-4 is enabled in the Thermal Resistor mode.

CONFIDENTIAL

9.7.2.2.18 Beep Event Enable Register (Index=5Ch, Default=60h)

Bit	R/W	Description
7	R/W	**Thermal Diode Zero Degree Adjust Register Write Enable**
6-4	R/W	**ADC Clock Selection** 000: 500kHz 001: 250kHz 010: 125K 011: 62.5kHz 100: 31.25kHz 101: 24MHz 110: 1MHz(Default) 111: 2MHz
3	R/W	**Reserved**
2	R/W	This bit can enable the beep action when TMPINs exceed the limit
1	R/W	This bit can enable the beep action when VINs exceed the limit.
0	R/W	This bit can enable the beep action when FAN_TACs exceed the limit.

9.7.2.2.19 Beep Frequency Divisor of Fan Event Register (Index=5Dh, Default=00h)

Bit	R/W	Description
7-4	R/W	**Tone Divisor** Tone=500/(bits[7:4]+1)
3-0	R/W	**Frequency Divisor** Frequency=10K/(bits[3:0]+1)

9.7.2.2.20 Beep Frequency Divisor of Voltage Event Register (Index=5Eh, Default=00h)

Bit	R/W	Description
7-4	R/W	**Tone Divisor** Tone=500/(bits[7:4]+1).
3-0	R/W	**Frequency Divisor** Frequency=10K/(bits[3:0]+1)

9.7.2.2.21 Beep Frequency Divisor of Temperature Event Register (Index=5Fh, Default=00h)

Bit	R/W	Description
7-4	R/W	**Tone Divisor** Tone=500/(bits[7:4]+1)
3-0	R/W	**Frequency Divisor** Frequency=10K/(bits[3:0]+1)

9.7.2.2.22 Vendor ID Register (Index=58h, Default=90h)

Bit	R/W	Description
7-0	R	**ITE Vendor ID;read Only**

9.7.2.2.23 Code ID Register (Index=5Bh, Default=12h)

Bit	R/W	Description
7-0	R	**ITE Vendor ID;read Only**

CONFIDENTIAL

9.7.2.3 FAN Controller Register Description

9.7.2.3.1 Fan Tachometer 1-6Reading Registers (Index=0Dh-0Fh, 18h-1Ah, 80h-83h, 93h-94h)

These registersindicatethe count numbers of the internal clock per revolution [15-0]

FAN Channel	R/W	FAN Tachometer Reading (MSB)	FAN Tachometer Reading (LSB)	Default Value
FAN1	R	18h	0Dh	-
FAN2	R	19h	0Eh	-
FAN3	R	1Ah	0Fh	-
FAN4	R	81h	80h	-
FAN5	R	83h	82h	-
FAN6	R	94h	93h	-

9.7.2.3.2 Fan Tachometer 1-6Limit Registers (Index=10h-12h, 1Bh-Dh, 84h-87h, B2h-B3h)

These registers indicate thefan limit value [15-0].

FAN Channel	R/W	FAN Tachometer Reading (MSB)	FAN Tachometer Reading (LSB)	Default Value *Note
FAN1	R/W	1Bh	10h	-
FAN2	R/W	1Ch	11h	-
FAN3	R/W	1Dh	12h	-
FAN4	R/W	85h	84h	-
FAN5	R/W	87h	86h	-
FAN6	R/W	B3h	B2h	-

Note:
These registers have no default values and these settings have impact on VIN, TEMP, and FAN's detection. Therefore, the mistaken action might happen during the detecting process. In order to prevent these unexpected behaviors happening, it is recommended that the related interrupts or SMI mask registers (04h~09h) be enabled for the unused hardware monitor.

9.7.2.3.3 Fan Tachometer 1-6Enable Registers

These registers indicate theFAN_TAC enable/disable.

FAN Channel	R/W	FAN Tachometer Enable	Default Value
FAN1	R/W	13h[4]	0b
FAN2	R/W	13h[5]	0b
FAN3	R/W	13h[6]	0b
FAN4	R/W	0Ch[4]	0b
FAN5	R/W	0Ch[5]	0b
FAN6	R/W	0Bh[3]	0b

CONFIDENTIAL

9.7.2.3.4 FAN_CTL Control Register (Index=14h, Default=40h)

Bit	R/W	Description
7	R/W	**FAN_CTL Polarity (for all FANs)** 0: Active low (Default) 1: Active high
6-4	R/W	**PWM Base Clock Select(for FAN1, 3, 4, 5, 6)** 000: 48MHz (PWM Frequency=187.5kHz) 001: 24MHz(PWM Frequency=93.75kHz) 010: 12MHz(PWM Frequency=46.87kHz) 011: 8MHz(PWM Frequency=31.25kHz) 100: 6MHz(PWM Frequency=23.43kHz) (Default) 101: 3MHz(PWM Frequency=11.7kHz) 110: 1.5MHz(PWM Frequency=5.86kHz) 111: 51kHz(PWM Frequency=200Hz)
3-2	R/W	**Reserved**
1	R/W	**FAN1 Highest Mode Enable** 0: Disable 1: Enable
0	R/W	**FAN2 Highest Mode Enable** 0: Disable 1: Enable

CONFIDENTIAL

9.7.2.3.5 FAN_CTL1-6PWM Control Register (Index=15h,16h,17h, 1Eh,1Fh, 92h)

Table 9-6. FAN_CTL1-6 PWM Control Register

FAN Channel	R/W	Register Index	Default Value
FAN1	R/W	15h	00h
FAN2	R/W	16h	00h
FAN3	R/W	17h	00h
FAN4	R/W	1Eh	00h
FAN5	R/W	1Fh	00h
FAN6	R/W	92h	00h

Bit	R/W	Description
7	R/W	**FAN_CTL PWM Mode Automatic/Software Operation Selection** 0: Software operation 1: Automatic operation
6-0	R/W	**When bit 7 =0:** **Bit 7-0 of Index 63h, 6Bh, 73h, 7Bh, A3h, ABh: 256 Steps of PWM Control When in Software Operation** **When bit 7 =1:** **Bit 6: Reserved** **Bit 5-3: Temperature Input Selection(refer to Table 9-10)** 000: TMPIN1 (29h) 001: TMPIN2 (2Ah) 010: TMPIN3 (2Bh) 011: TMPIN4(2Ch) 100: TMPIN5 (2Dh) 101: TMPIN6 (2Eh) 110: the Highest temperature of 2Dh and 2Eh others: Reserved **Bit 2: Tachometer Closed-loop Mode Enable Bit** 0: Disable 1: Enable **Bit 1: Reserved** **Bit 0: FAN_CTL Gating Enable Bit in S0ix Mode** 0: Disable 1: Enable

CONFIDENTIAL

9.7.2.3.6 FAN_CTL6-1 SmartGuardian Automatic Mode Smoothing Control Registers

Table 9-7. FAN 1-6 Smoothing Control Registers

FAN Channel	R/W	Register Index	Default Value
FAN1	R/W	Bank2, 5Dh[5-0]	3Ch
FAN2	R/W	Bank2, 5Eh[5-0]	3Ch
FAN3	R/W	Bank2, 5Fh[5-0]	3Ch
FAN4	R/W	Bank2, 6Dh[5-0]	3Ch
FAN5	R/W	Bank2, 6Eh[5-0]	3Ch
FAN6	R/W	Bank2, 6Fh[5-0]	3Ch

Table 9-8. Smoothing Frequency Selection Table

EC Bank-2 5Dh, 5Eh, 5Fh 6Dh, 6Eh, 6Fh [bit5-0]	Frequency	Time/per step	Note
000000(00h)	2kHz/1	0.5ms*1	
000001(01h)	2kHz/2	0.5ms*2	
000010(02h)	2kHz/3	0.5ms*3	
……			
111001(39h)	2kHz/58	0.5ms*58	
111010(3Ah)	2kHz/59	0.5ms*59	
111011(3Bh)	2kHz/60	0.5ms*60	
111100(3Ch)	1Hz	1000ms	Default
111101(3Dh)	16Hz	62.5ms	
111110(3Eh)	8Hz	125ms	
111111(3Fh)	4Hz	250ms	

9.7.2.3.7 FAN_CTL6-1 SmartGuardian Automatic Mode Temperature Limit of OFF Registers(Index=A8h, A0h, 78h, 70h, 68h, 60h, Default=7Fh)

This register is Temperature Limit Value of Fan OFF

FAN Channel	R/W	Register Index	Default
FAN1	R/W	60h	7Fh
FAN2	R/W	68h	7Fh
FAN3	R/W	70h	7Fh
FAN4	R/W	78h	7Fh
FAN5	R/W	A0h	7Fh
FAN6	R/W	A8h	7Fh

9.7.2.3.8 FAN_CTL6-1 SmartGuardian Automatic Mode Temperature Limit of Fan Start Registers(Index= A9h, A1h, 79h, 71h, 69h, 61h, Default=7Fh)

This register is Temperature Limit Value of Fan Start

FAN Channel	R/W	Register Index	Default
FAN1	R/W	61h	7Fh
FAN2	R/W	69h	7Fh
FAN3	R/W	71h	7Fh
FAN4	R/W	79h	7Fh
FAN5	R/W	A1h	7Fh
FAN6	R/W	A9h	7Fh

CONFIDENTIAL

9.7.2.3.9 FAN_CTL6-1 SmartGuardian Automatic Mode Temperature Limit of Full Speed Registers(Index= AAh, A2h, 7Ah, 72h, 6Ah, 62h, Default=7Fh)

This register is Temperature Limit Value of Fan Full Speed

FAN Channel	R/W	Register Index	Default
FAN1	R/W	62h	7Fh
FAN2	R/W	6Ah	7Fh
FAN3	R/W	72h	7Fh
FAN4	R/W	7Ah	7Fh
FAN5	R/W	A2h	7Fh
FAN6	R/W	AAh	7Fh

9.7.2.3.10 FAN_CTL6-1 SmartGuardian Automatic Mode Start PWM Registers (Index= ABh, A3h, 7Bh, 73h, 6Bh, 63h, Default=00h/80h)

FAN Channel	R/W	Register Index	Default
FAN1	R/W	63h	80h
FAN2	R/W	6Bh	80h
FAN3	R/W	73h	80h
FAN4	R/W	7Bh	80h
FAN5	R/W	A3h	80h
FAN6	R/W	ABh	80h

For Original Fan Control Mode:

Bit	R/W	Description
7-0	R/W	**When bit 7 of index 15h, 16h, 17h, 1Eh, 1Fh, 92h =0:** 256Steps of PWM Control When in Software Operation **When bit 7 of index 15h, 16h, 17h, 1Eh, 1Fh, 92h =1:** PWM Value

For Tachometer Closed-loop Mode:

Bit	R/W	Description
7-0	R/W	**Initial Value of Target RPM** RPM = 32 * Bit[7:0]

CONFIDENTIAL

9.7.2.3.11 FAN_CTL6-1 SmartGuardian Automatic Mode Control Registers (Index= ACh, A4h, 7Ch, 74h, 6Ch, 64h, Default=00h)

FAN Channel	R/W	Register Index	Default
FAN1	R/W	64h	00h
FAN2	R/W	6Ch	00h
FAN3	R/W	74h	00h
FAN4	R/W	7Ch	00h
FAN5	R/W	A4h	00h
FAN6	R/W	ACh	00h

For Original Fan Control Mode:

Bit	R/W	Description
7	R/W	**FAN Smoothing** This bit enables the FAN PWM smoothing change. 0: Disable 1: Enable
6-0	R/W	**Slope PWM Bit[6:0]** Slope = (Slope PWM bit[6:3] + Slope PWM bit[2:0] / 8) PWM value/℃

For Tachometer Closed-loop Mode:

Bit	R/W	Description
5-0	R/W	**Slope of Target RPM** Slope = 8 * Bit[5:0] (RPM/℃)

9.7.2.3.12 FAN_CTL6-1 SmartGuardian Automatic Mode △-Temperature Registers (Index=ADh, A5h, 7Dh, 75h, 6Dh, 65h)

FAN Channel	R/W	Register Index	Default
FAN1	R/W	65h	00h
FAN2	R/W	6Dh	00h
FAN3	R/W	75h	00h
FAN4	R/W	7Dh	00h
FAN5	R/W	A5h	00h
FAN6	R/W	ADh	00h

Bit	R/W	Description
7	R/W	**Direct-Down Control** This bit is to determine the PWM linear changing decreasing mode. 0: Slow decreasing mode 1: Direct decreasing mode
6	R/W	**FAN Full Limit Control as Thermal out Reached** When the relevant enable bit is set and the FAN output mode is selected as Automatic mode by bit7 of EC index 15h, 16h, 17h, the corresponding FAN output will be forced to full PWM if any thermal output limit is reached. 0: Disable 1: Enable
5	-	**Reserved**
4-0	R/W	**△-Temperature Interval [4:0]**

CONFIDENTIAL

9.7.2.3.13 FAN_CTL6-1 Target Zone Registers (Index=AEh, A6h, 7Eh, 76h, 6Eh, 66h)

FAN Channel	R/W	Register Index	Default
FAN1	R/W	66h	0Fh
FAN2	R/W	6Eh	0Fh
FAN3	R/W	76h	0Fh
FAN4	R/W	7Eh	0Fh
FAN5	R/W	A6h	0Fh
FAN6	R/W	AEh	0Fh

For Tachometer Closed-loop Mode:

Bit	R/W	Description
3-0	R/W	**Target Zone Boundary** Target Zone = Target RPM +/- (8 * bit[3:0]) (RPM/℃)

9.7.2.3.14 FAN_CTL6-1 PWM Duty Reading Registers (Index= AFh, A7h, 7Fh, 77h, 6Fh, 67h)

FAN Channel	R/W	Register Index	Default
FAN1	R	67h	-
FAN2	R	6Fh	-
FAN3	R	77h	-
FAN4	R	7Fh	-
FAN5	R	A7h	-
FAN6	R	AFh	-

CONFIDENTIAL

9.7.2.3.15 Extra Vector Registers

Table 9-9. FAN Extra-Vector Registers

Note: These registers are in Bank 2.

	Ex-Vector	Extra-Vector Enable	START Limit	Temperature Input	Positive/ Negative Slope	Slope value	Range	Full Limit
FAN1	A	11h[7]	10h	12h[7-5]	13h[7]	11h[6-0]	13h[6-0]	N/A
	B	15h[7]	14h	16h[7-5]	17h[7]	15h[6-0]	17h[6-0]	N/A
	C	19h[7]	18h	1Ah[7-5]	1Bh[7]	19h[6-0]	1Bh[6-0]	1Ch
FAN2	A	21h[7]	20h	22h[7-5]	23h[7]	21h[6-0]	23h[6-0]	N/A
	B	25h[7]	24h	26h[7-5]	27h[7]	25h[6-0]	27h[6-0]	N/A
	C	29h[7]	28h	2Ah[7-5]	2Bh[7]	29h[6-0]	2Bh[6-0]	2Ch
FAN3	A	31h[7]	30h	32h[7-5]	33h[7]	31h[6-0]	33h[6-0]	N/A
	B	35h[7]	34h	36h[7-5]	37h[7]	35h[6-0]	37h[6-0]	N/A
	C	39h[7]	38h	3Ah[7-5]	3Bh[7]	39h[6-0]	3Bh[6-0]	3Ch
FAN4	A	41h[7]	40h	42h[7-5]	43h[7]	41h[6-0]	43h[6-0]	N/A
	B	45h[7]	44h	46h[7-5]	47h[7]	45h[6-0]	47h[6-0]	N/A
	C	49h[7]	48h	4Ah[7-5]	4Bh[7]	49h[6-0]	4Bh[6-0]	4Ch
FAN5	A	51h[7]	50h	52h[7-5]	53h[7]	51h[6-0]	53h[6-0]	N/A
	B	55h[7]	54h	56h[7-5]	57h[7]	55h[6-0]	57h[6-0]	N/A
	C	59h[7]	58h	5Ah[7-5]	5Bh[7]	59h[6-0]	5Bh[6-0]	5Ch
FAN6	A	61h[7]	60h	62h[7-5]	63h[7]	61h[6-0]	63h[6-0]	N/A
	B	65h[7]	64h	66h[7-5]	67h[7]	65h[6-0]	67h[6-0]	N/A
	C	69h[7]	68h	6Ah[7-5]	6Bh[7]	69h[6-0]	6Bh[6-0]	6Ch

Start Limit Registers

Bit	R/W	Description
7-0	R/W	**Temperature Limit Value of Fan Start**

Slope Registers

Bit	R/W	Description
6-0	R/W	**For Original Fan Control Mode: Slope PWM Bit[6:0]** Slope = (Slope PWM bit[6:3] + Slope PWM bit[2:0] / 8) PWM value/℃ **For Tachometer Closed-Loop Mode: Slope of RPM** Slope = 8 * Bit[6:0] (RPM/℃)

Temperature Input Registers

Bit	R/W	Description
7-5	R/W	**Temperature Input Select** 000: TMPIN1 001: TMPIN2 010: TMPIN3 011: TMPIN4 100: TMPIN5 101: TMPIN6 110: The Highest mode of TMPIN5 and TMPIN6 if Bank2 4Dh<6>=1

CONFIDENTIAL

Positive/Negative Slop & Range Selection Registers

Bit	R/W	Description
7	R/W	**Positive/Negative Slope selection** This bit provides selection for that the slope value in Special FAN Control Mode Extra Vector is positive or negative. 0: Postive 1: Negive
6-0	R/W	**Range Selection [6:0]** These bits determine the extra vector range after the temperature limit. If the input temperature > (temperature limit + Range[6:0]), the vector will equal the value of (temperature limit + Range[6:0]). If Range[6:0]=00h, it means no range limit.

FullLimit Registers (Extra Vector C only)

Bit	R/W	Description
7-0	R/W	**Temperature Limit Value of Fan Full Speed**

CONFIDENTIAL

9.7.2.4 ADC Controller Register Description

9.7.2.4.1 VIN6-0Voltage Reading Registers (Index=26h-20h)

VIN Channel	R/W	Voltage Register Index	Note
VIN0	R	20h	1
VIN1	R	21h	1
VIN2	R	22h	1
VIN3	R	23h	1
VIN4	R	24h	1
VIN5	R	25h	1
VIN6	R	26h	1
Internal 3VSB	R	27h	2
VBAT	R	28h	2
Internal AVCC3	R	2Fh	2

Note1: The voltage = reading value * 10.9mV
Note2: The voltage = reading value * 2 * 10.9mV

9.7.2.4.2 ADC Voltage Channel Enable Register (Index=50h, Default=00h)

Bit	R/W	Description
7	R/W	**ADC Internal 3VSB Scan Enable**
6-0	R/W	**ADC VIN6-0 Scan Enable**

9.7.2.4.3 VIN High/Low Limit Registers (VINHLR), (Index=30h-3Fh, Default = 00h)

VIN Channel	R/W	High Limit Register Index	Low Limit Register Index
VIN0	R/W	30h	31h
VIN1	R/W	32h	33h
VIN2	R/W	34h	35h
VIN3	R/W	36h	37h
VIN4	R/W	38h	39h
VIN5	R/W	3Ah	3Bh
VIN6	R/W	3Ch	3Dh
Internal 3VSB	R/W	3Eh	3Fh

CONFIDENTIAL

9.7.2.5 Temperature Register Description

9.7.2.5.1 TMPIN1-6 Reading Registers (Index=29h-2Eh)

Table 9-10. TMPIN Source Selection Table

TMPIN Source	TMPIN Source Selection – 1 (TSS1) Refer to Table 9-10	TMPIN Source Selection- 2 (TSS2) Refer to Table 9-10 & Table 9-11
TMPIN1 (29h)	Bank2,1Dh[3-0], default=0000b	Bank2,3Dh[0], default=0b
TMPIN2 (2Ah)	Bank2,1Dh[7-4], default=0000b	Bank2,3Dh[1], default=0b
TMPIN3 (2Bh)	Bank2,1Eh[3-0], default=0000b	Bank2,3Dh[2], default=0b
TMPIN4 (2Ch)	Bank2,1Eh[7-4], default=0000b	Bank2,3Dh[3], default=0b
TMPIN5 (2Dh)	Bank2,1Fh[3-0], default=0000b	Bank2,3Dh[4], default=0b
TMPIN6 (2Eh)	Bank2,1Fh[7-4], default=0000b	Bank2,3Dh[5], default=0b

Table 9-11. TMPIN Source Selection – 1 (TSS1)

Bit[3-0]	TMPIN Source			Switch Register
0000	TMPIN1(TD1)		TMPIN1(TR1)	51h[bit 0 & 3]
0001	TMPIN2(TD2)		TMPIN2(TR2)	51h[bit 1 & 4]
0010	TMPIN3(TD3)		TMPIN3(TR3)	51h[bit 2 & 5]
0011	SB-TSI / SM-Host		Reserved	Refer to Table 9-12 TSS2
0100	PECI1(0x30) Domain0		Reserved	Refer to Table 9-12 TSS2
0101	PECI2(0x31) Domain0		Reserved	Refer to Table 9-12 TSS2
0110	PECI3(0x32) Domain0		Reserved	Refer to Table 9-12 TSS2
0111	PECI4(0x33) Domain0		Reserved	Refer to Table 9-12 TSS2
1000	PECI5(0x34) Domain0		2nd AMD GPU Temperature, for Solar Family	Refer to Table 9-12 TSS2
1001	PCH from SM-Link (Data 0)	PCH over eSPI OOB	2nd AMD GPU, Temperature for EveryGreen Family	N/A
1010	PCH from SM-Link (Data 1)		1st AMD GPU Temperature for Solar Family	9Eh[bit 1]=1
1011	MCH from SM-Link		1st AMD GPU Temperature for EveryGreen Family	9Eh[bit 1]=1
1100	DIMM0 from SM-Link		AMD CPU DTS(SB-TSI)	Refer to Table 9-11 TSS2
1101	DIMM1 from SM-Link		MxM GPU	Refer to Table 9-11 TSS2
1110	DIMM2 from SM-Link		PECI Bridge PECI0	Bank2, 72h[bit 0]=1 , 72h[bit 2]=0
1111	DIMM3 from SM-Link		PECI Bridge PECI 0&1	Bank2, 72h[bit 0]=1 , 72h[bit 2]=1

CONFIDENTIAL

Table 9-12. TMPIN Source Selection – 2 (TSS2)

TMPIN Source Selection 2	
Register = '0b'	**Register = '1b'**
SB-TSI / SM-Host	Reserved
PECI1(0x30) Domain0	Reserved
PECI2(0x31) Domain0	Reserved
PECI3(0x32) Domain0	Reserved
PECI4(0x33) Domain0	Reserved
PECI5(0x34) Domain0	2nd AMD GPU Temperature, for Solar Family
PCH from SM-Link (Data 0)	2nd AMD GPU, Temperaturefor EveryGreen Family
PCH from SM-Link (Data 1)	N/A
MCH from SM-Link	N/A
DIMM0 from SM-Link	AMD CPU DTS(SB-TSI)
DIMM1 from SM-Link	MxM GPU

9.7.2.5.2 TMPIN1-6 High/Low Limit Registers (Index=40h-47h, B4h-B7h)

TMPIN Channel	R/W	High Limit Register	Low Limit Register	Offset Adjust Register (*Note1) Index, default
TMPIN1	R/W	40h	41h	56h, 00h
TMPIN2	R/W	42h	43h	57h, 00h
TMPIN3	R/W	44h	45h	59h, 00h
TMPIN4	R/W	46h	47h	5Ah, 00h
TMPIN5	R/W	B4h	B5h	90h, 00h
TMPIN6	R/W	B6h	B7h	91h, 00h

Note1: These registers are **read only** unless bit 7 of 5Ch is set.

CONFIDENTIAL

9.7.2.6 External Temperature Sensor Register Description

9.7.2.6.1 External Temperature Sensor Host Status Register (Index=88h, Default= -00h)

Bit	R/W	Description
7	R/W	**Data FIFO Pointer Clear** Writing 1 clears the Read/Write Data FIFO pointers. 0: No action It always reports 0 when reading it. 1: Both Read and Write Data FIFO pointers cleared Read Data register will point to Read Data 1, and Write Data register will point to Write Data 2.
6	R/WC	**PECI Bus Abnormal/Contention Error** This bit reports the PECI line status. 0: No error 1: Abnormal/Contention error
5	R/WC	**PECI Received Error Code** This bit reports the PECI line status and received error code (8000h-81FFh). 0: No error 1: Error found
4	R/WC	**PECI Line High-Z Status/Failed** This bit reports the PECI line High-Zstatus. 0: PECI line does not drive High-Z. 1: PECI line drives High-Z.
3	R/WC	**Write_FCS_ERR** Writing 1 clears this bit. In the PECI mode, it reports Write FCS error. 0: No error 1: Write FCS error
2	R/WC	**NotValid/Read_FCS_ERR** Writing 1 clears this bit. In the PECI mode, it reports Read FCS error. 0: No error 1: Read FCS error
1	R/WC	**Finish (FNSH)** Writing 1 clears this bit. 0: None 1: This bit is set when the stop condition is detected.
0	R	**Host Busy (BUSY)** 0: The current transaction is completed. 1: This bit is set while the command is in operation.

9.7.2.6.2 External Temperature Sensor Host Target Address Register (Index=89h, Default=00h)

Bit	R/W	Description
7-0	R/W	**Host Target Address Register (HAddr [7:0])** This register is the Target Address field of the PECI protocol.

9.7.2.6.3 External Temperature Sensor Host Write Length Register (Index=8Ah, Default=00h)

Bit	R/W	Description
7-0	R/W	**Host Write Length Register (HW_length [7:0])** This register is the Write Length field of the PECI protocol.

CONFIDENTIAL

9.7.2.6.4 External Temperature Sensor Host Read Length Register (Index=8Bh, Default=00h)

Bit	R/W	Description
7-0	R/W	**Host Read Length Register (HR_length [7:0])** This register is the Read Length field of the PECI protocol.

9.7.2.6.5 External Temperature Sensor Host Command (Write Data 1) Register (Index=8Ch, Default=00h)

Bit	R/W	Description
7-0	R/W	**Host Command Register (HCMD [7:0])** This register is the command field of the protocol. In thePECI mode, it is the command (Write Data 1) byte.

9.7.2.6.6 External Temperature Sensor Write Data (2-8) Register (Index=8Dh, Default=--h)

Bit	R/W	Description
7-0	R/W	**Write Data (2-8) [7:0] (in PECI mode)** This is a 16-byte FIFO register, which is only valid in the PECI mode.

9.7.2.6.7 External Temperature Sensor Host Control Register (Index=8Eh, Default=00h)

Bit	R/W	Description
7-6	R/W	**Auto-Start Control (Auto-START)** The host will start the transaction in a regular rate automatically. 00: 32 Hz 01: 16 Hz 10: 8 Hz 11: 4 Hz
5	R/W	**Auto-Start (Auto-START)** 0: Disable 1: Enable The host will start the transaction in a regular rate, which is determined by bit [6:5] automatically.
4	R/W	**PECI Host Auto-abort atFCS Error** This bit enables the PECI host to abort the transaction when an error occurs to FCS. 0: Disable 1: Enable
3	R/W	**Multi PECI Scan Enable** 0: Disable 1: Enable
2	R/W	**PECI Contention Control** This bit enables the PECI bus contention control. 0: Disable 1: Enable When the PECI bus is contentious, the host will abort the transaction.
1	R/W	**PECI_idle_High** This bit sets the PECI bus idle-high in the PECI host mode. 0: PECIidle low 1: PECIidle high

CONFIDENTIAL

Bit	R/W	Description
0	R/W	**Start (START)** This bit is **write-only**. Writing 0 to it during transaction will issue a “kill process” and bit4 of 88h register will be set. Writing 1 to it during the “NOT BUSY” state (bit0 of 88h = 0) will start a transaction. Writing 1 to it during the“BUSY” state (bit0 of 88h = 1) will not issue any transaction. So, the programmer should check the “BUSY” status before issuing a transaction. 0: This bit always returns 0 at read. 1: When this bit is set, the host controller will perform the transaction.

9.7.2.6.8 External Temperature Sensor Read Data (1-16) Register (Index=8Fh, Default=--h)

Bit	R/W	Description
7-0	R/W	**Read Data (1-16) [7:0]** This is a32-byte FIFO register.

9.7.2.6.9 PROCHOT# Control Register (Index=95h, Default=--h)

Bit	R/W	Description
7-5	R/W	**PROCHOT# Input Select** 001:Index 29h 010:Index 2Ah 011:Index 2Bh 100:Index 2Ch 101:Index 2Dh 110:Index 2Eh
4-0	R/W	**△-Temperature Interval [4:0]**

9.7.2.6.10 PROCHOT# Temperature Limit Register (Index=96h, Default=--h)

Bit	R/W	Description
7-0	R/W	**PROCHOT# Temperature Limit Select**

CONFIDENTIAL

9.7.2.6.11 PCH/SB-TSI Host Status Register (Index=98h, Default=---00000b)

Bit	R/W	Description
7	R/W	**Data FIFO Pointer Clear** Writing 1 clears Read/Write Data FIFO pointers. 0: No action It always reports 0 when reading it. 1: Both Read and Write Data FIFO pointers cleared Read Data register will point to Read Data 1, and Write Data register will point to Write Data 2.
6	R/W	**Bus Selection** This bit selects the SMB host protocol. 0: SM-Bus Block R/W (support PCH SM-Link) 1: SM-Bus Byte R/W (support SB-TSI)
5	R/WC	**Reserved**
4	R/WC	**Transmission Killed** Writing 0 to bit 0 of 9Eh during transaction will issue a “kill process” and then this bit will be set.
3	R/WC	**Bus Error** 0: No error 1: Error
2	R/WC	**Data Valid** Writing 1 clears this bit. In the SB-TSI mode, it reports the valid bit of Data phase. If this bit is set to 0(valid data =0), the data is valid. 0: Data valid 1: Data invalid
1	R/WC	**Finish (FNSH)** Writing 1 clears this bit. 0: None 1: This bit is set when the stop condition is detected.
0	R	**HOST Busy (BUSY)** 0: The current transaction is completed. 1: This bit is set while the command is in operation.

9.7.2.6.12 PCH/SB-TSI Host Target Address Register (Index=99h, Default=00h)

Bit	R/W	Description
7-0	R/W	**Host Target Address Register (HAddr [7:0])** This register is the Target Address field of the PCH/SB-TSI protocol.

9.7.2.6.13 PCH/SB-TSI Host Command Register (Index=9Ch, Default=00h)

Bit	R/W	Description
7-0	R/W	**Host Command Register (HCMD [7:0])** This register is the command field of the protocol. In theSB-TSI mode, it is the Command field. If the host controller is busy, the value of this register cannot be changed or the host will send the wrong command. If the value is out of definition (for example, 03h to FFh for SB-TSI protocol), the host will transfer it to the normal value and no error will be detected by the host controller.

CONFIDENTIAL

9.7.2.6.14 PCH/SB-TSI Write Data Register (Index=9Dh, Default=--h)

Bit	R/W	Description
7-0	R/W	**Write Data** This is a 16-byte FIFO register.

9.7.2.6.15 PCH/SB-TSI Host Control Register (Index=9Eh, Default=00h)

Bit	R/W	Description
7-6	R/W	**Auto-Start Control (Auto-START)** The host will start the transaction in a regular rate automatically. 00: Disable auto-start 01: 1 Hz 10: 2 Hz 11: 4 Hz
5-4	R/W	**DTS Multi-scan Selection** This function 00: PCH SM-Link, AMD GPU (Block Read, Block Read) 01: PCH SM-Link, MxM GPU (Block Read, Byte Read) 10: AMD SB-TSI, AMD GPU (Byte Read, Block Read) 11: AMD SB-TSI, MxM GPU (Byte Read, Byte Read)
3	R/W	**DTS Multi-scan Enable** 0: Disable 1: Enable For detail programming procedure, please refer to Figure 9-24
2	R/W	**SB-TSI Clock Selection** 0: 100kbits/s 1: 400kbits/s
1	R/W	**1st AMD GPU Temperature Selection** 0: Disable 1: Enable **SB-TSI_byte_sel** This bit selects 8/16 bit data in the SB-TSI mode. 0: Send byte / Receive byte enabled 1: Byte read/write enabled
0	R/W	**Start (START)** This bit is **write-only**. Writing 0 to it during transaction will issue a “kill process” and bit 4 of 98h register will be set. Writing 1 to it during the “NOT BUSY” state (bit 0 of 98h = 0) will start a transaction. Writing 1 to it during the “BUSY” state (bit 0 of 98h = 1) will not issue any transaction. So, the programmer should check whether the statusis “BUSY” before issuing a transaction. 0: This bit always returns 0 at read. 1: When this bit is set, the host controller will perform the transaction.

9.7.2.6.16 PCH/SB-TSI Read Data (1-16) Register (Index=9Fh, Default=--h)

Bit	R/W	Description
7-0	R/W	**Read Data (1-16) [7:0]** This is a 21-byte FIFO register.

CONFIDENTIAL

9.7.2.6.17 Vitual Wire OOB Control Register (Index=C0h, Default=00h)

Bit	R/W	Description
7	R/W	**Data FIFO Pointer Clear** Writing 1 clears Read/Write Data FIFO pointers. 0: No action It always reports 0 when reading it. 1: Both Read and Write Data FIFO pointers cleared Read Data register will point to Read Data 1 while Write Data register will point to Write Data 2.
6	R/W	**OOB_Temperature Update Data Avaliable Mask** 0: Disable 1: Enable
5	R/W	**OOB PECI Temperature Update Data Avaliable Mask** 0: Disable 1: Enable
4	R/W	**OOB FREE Selection** 0: OOB FREE when data empty 1: Always FREE
3	R/W	**GET_Temperature Auto Run Selection** 0: Disable 1: Enable
2	R/W	**GET_OOB Auto Run Selection** 0: Disable 1: Enable
1	R/W	**PUT_OOB Message Data Status Selection** 0: Data avaliable 1: Data empty
0	R/W	**GET_OOB Message Start Bit Selection** 0: Start (single run) 1: Idle

9.7.2.6.18 Vitual Wire GET_OOB Length Register (Index=C1h, Default=00h)

Bit	R/W	Description
7	R/W	A “1” indicates the PUT OOB interrupt for SMI.
6	R/W	A “1” indicates the PUT OOB interrupt for IRQ.
5-0	R/W	**Reserved**

9.7.2.6.19 Vitual Wire PUT_OOB Length Register (Index=C2h, Default=00h)

Bit	R/W	Description
7-0	R/W	**PUT_OOB Length[7:0]**

9.7.2.6.20 Vitual Wire GET_OOB Write Data Register (Index=C3h, Default=00h)

Bit	R/W	Description
7-0	R/W	**Write Data (1-16) [7:0]** This is a 24-byte FIFO register.

9.7.2.6.21 Vitual Wire PUT_OOB Read Data Register (Index=C4h, Default=00h)

Bit	R/W	Description
7-0	R/W	**Read Data (1-16) [7:0]** This is a 16-byte FIFO register.

CONFIDENTIAL

9.7.2.6.22 PECI and SB-TSI Control Register (Index=C0h, BANK1, Default=--h)

Bit	R/W	Description
7-5	R/W	**Reserved**
4	R/W	**PECI Finish Interrupt Mask Register** 0: PECI finish interrupt masked (Default) 1: PECI finish interrupt enabled
3-2	R/W	**Reserved**
1	R/W	**PCH/SB-TSI Error Reset Register** 0: Disable 1: Enable
0	R/W	**SB-TSI Auto-run Fraction Value Control Register** 0: Disable fractional value 1: Enable fractional value

9.7.2.6.23 Integer Value of SB-TSI Temperature Reading Register (Index=C1h, BANK1, Default=--h)

Bit	R/W	Description
7-0	R/W	**Integer CPU temperature value by SB-TSI I/F** This field returns the integer portion of the CPU temperature. SB-TSI CPU temperature readings and limit registers encode the temperature in increments of 0.125 from 0 to 255.875. The high byte represents the integer portion of the temperature from 0 to 255. One increment in thehigh byte is equivalent to a step of one. The upper three bits of the low byte represent the decimal portion of the temperature. One increment of these bits is equivalent to a step of 0.125.

9.7.2.6.24 Fractional Value of SB-TSI Temperature Reading Register (Index=C2h, BANK1, Default=--h)

Bit	R/W	Description
7-0	R/W	**Decimal CPU temperature value by SB-TSI I/F** This field returns the integer portion of the CPU temperature. SB-TSI CPU temperature readings and limit registers encode the temperature in increments of 0.125 from 0 to 255.875. The high byte represents the integer portion of the temperature from 0 to 255. One increment in thehigh byte is equivalent to a step of one. The upper three bits of the low byte represent the decimal portion of the temperature. One increment of these bits is equivalent to a step of 0.125.

CONFIDENTIAL

9.7.2.6.25 PCHSM-Link Reading Register (Index= D0h~D8h, BANK1)

PCHSM-Link	R/W	Register Index	Description
Byte 0	R	Index= D0h, BANK1	Processor Package Temperature
Byte 1	R	Index= D1h, BANK1	The PCH Temperature
Byte 2	R	Index= D2h, BANK1	CPU Temperature Data LSB [7:0]
Byte 3	R	Index= D3h, BANK1	CPU Temperature Data MSB [15:8]
Byte 4	R	Index= D4h, BANK1	MCH Temperature
Byte 5	R	Index= D5h, BANK1	Thermal Sensor (TS) on DIMM 0
Byte 6	R	Index= D6h, BANK1	Thermal Sensor (TS) on DIMM 1
Byte 7	R	Index= D7h, BANK1	Thermal Sensor (TS) on DIMM 2
Byte 8	R	Index= D8h, BANK1	Thermal Sensor (TS) on DIMM 3
Byte 9	R	Index= D9h, BANK1	
Byte 10	R	Index= DAh, BANK1	
Byte 11	R	Index= DBh, BANK1	
Byte 12	R	Index= DCh, BANK1	

9.7.2.6.26 PECI Processor 1~8 Domain 0,1 Temperature Reading Register(Index= E0h~FFh, BANK1)

	Domain 0		Domain 1	
	Temp. Reading MSB	Temp. Reading LSB	Temp. Reading MSB	Temp. Reading LSB
PECI Processor 0(0x30)	Bank1, E1h	Bank1, E0h	Bank1, E3h	Bank1, E2h
PECI Processor 1 (0x31)	Bank1, E5h	Bank1, E4h	Bank1, E7h	Bank1, E6h
PECI Processor 2 (0x32)	Bank1, E9h	Bank1, E8h	Bank1, EBh	Bank1, EAh
PECI Processor 3 (0x33)	Bank1, EDh	Bank1, ECh	Bank1, EFh	Bank1, EEh
PECI Processor 4 (0x34)	Bank1, F1h	Bank1, F0h	Bank1, F3h	Bank1, F2h
PECI Processor 5 (0x35)	Bank1, F5h	Bank1, F4h	Bank1, F7h	Bank1, F6h
PECI Processor 6 (0x36)	Bank1, F9h	Bank1, F8h	Bank1, FBh	Bank1, FAh
PECI Processor 7 (0x37)	Bank1, FDh	Bank1, FCh	Bank1, FFh	Bank1, FEh

CONFIDENTIAL

9.7.2.6.27 PCH Temperature over eSPI OOB Control Register (BANK2, Index=3Ch, Default=00h)

Bit	R/W	Description
7	R/W	**PCH Temperature over eSPI OOB Control Register (eSPI mode only; JP6=0)** 0: Disable 1: Enable
6-0	R/W	**Reserved**

9.7.2.6.28 PROCHOT# Control Register (Index=3Eh, BANK2, Default=--h)

Bit	R/W	Description
7	R/W	**PROCHOT# SMI Enable** 0: Disable 1: Enable
6	R/W	**PROCHOT# IRQ Enable** 0: Disable 1: Enable
5-0	R/W	**Reserved**

9.7.2.6.29 The Highest mode Control Register (Index=4Dh, BANK2, Default=--h)

Bit	R/W	Description
7	R/W	**Reserved**
6	R/W	**The Highest mode Temperature of TMPIN5 and TMPIN6 Enable** 0: Disable 1: Enable
5-0	R/W	**Reserved**

CONFIDENTIAL

9.7.2.6.30 Coolsense Eanble for TMPIN1/2 Control Register (Index=5Dh, BANK2, Default=--h)

Bit	R/W	Description
7	R/W	**Coolsense Enable for TMPIN1** 0: Disable 1: Enable
6	R/W	**Coolsense Enable for TMPIN2** 0: Disable 1: Enable
5-0	R/W	**Reserved**

9.7.2.6.31 Coolsense Eanble for TMPIN3/4 Control Register (Index=5Eh, BANK2, Default=--h)

Bit	R/W	Description
7	R/W	**Coolsense Enable for TMPIN3** 0: Disable 1: Enable
6	R/W	**Coolsense Enable for TMPIN4** 0: Disable 1: Enable
5-0	R/W	**Reserved**

9.7.2.6.32 Coolsense Eanble for TMPIN5/6 Control Register (Index=5Fh, BANK2, Default=--h)

Bit	R/W	Description
7	R/W	**Coolsense Enable for TMPIN5** 0: Disable 1: Enable
6	R/W	**Coolsense Enable for TMPIN6** 0: Disable 1: Enable
5-0	R/W	**Reserved**

CONFIDENTIAL

9.7.2.6.33 PECI Bridge Write Address Register (BANK2, Index=70h, Default=--h)

Bit	R/W	Description
7-0	R/W	PECI Bridge Write Address Register

9.7.2.6.34 PECI Bridge Read Address Register (BANK2, Index=71h, Default=--h)

Bit	R/W	Description
7-0	R/W	PECI Bridge Read Address Register

9.7.2.6.35 PECI Bridge Control Register (BANK2, Index=72h, Default=--h)

Bit	R/W	Description
7-3	R/W	**Reserved**
2	R/W	**PECI Channel Select** 0:PECI0 1:PECI0&PECI1
1	R/W	**Mode Selection** 0:PECI Mode 1: PCH Mode
0	R/W	**PECI Bridge Function Enable** 0: Disable 1: Enable

9.7.2.6.36 PECI Bridge Status Register (BANK2, Index=73h, Default=--h)

Bit	R/W	Description
7-2	-	**Reserved**
1	R	**PECI Mode Read Error Status**
0	R	**PECI Mode Read Busy Status**

CONFIDENTIAL

9.7.2.6.37 PECI Bridge Error Code Register (BANK2, Index=74h, Default=--h)

Bit	R/W	Description
7-0	R	**PECI Bridge Error Code Register**

9.7.2.6.38 PECI Bridge CPU0 Temperature Register (BANK2, Index=75h, Default=--h)

Bit	R/W	Description
7-0	R	**PECI Bridge CPU0 Temperature Register**

9.7.2.6.39 PECI Bridge CPU1 Temperature Register (BANK2, Index=76h, Default=--h)

Bit	R/W	Description
7-0	R	**PECI Bridge CPU1 Temperature Register**

9.7.2.6.40 Start PWM default value to FAN1~6 Control Register (BANK2, Index=90h, Default=--h)

Bit	R/W	Description
7-0	R	**Control Start PWM default value to FAN1~6** (EC_63h/6Bh/73h/7Bh/A3h/ABh)

9.7.2.6.41 Coolsense Raw Data from TMPIN1~6 Register (BANK2, Index=91h~96h, Default=--h)

Bit	R/W	Description
7-0	R	**Coolsense Raw Data from TMPIN1~6**

CONFIDENTIAL

9.7.3 Operation

9.7.3.1 Power on Reset and Software Reset

When the system power is first applied, the Environment Controller performs “power on reset” on the registers,make them return to their individual default values during a system hardware reset, and the EC will acquire a monitored value before it goes inactive. The ADC is activated to monitor the VBAT pin and then goes inactive. A software reset through bit 7 of Configuration Register (Index=00h, Default=18h) (refer to page 107) performs the same functions as the hardware reset except the function of the Serial Bus Interface Address register.

9.7.3.2 Starting Conversion

The monitoring function in the EC is activated when bit 3 of Configuration Register is cleared (low) and bit 0 of Configuration Register is set (high). Otherwise, this function will be enabled by setting several enabled bits,which are categorized into three groups, positive voltages, temperatures and FAN Tachometer inputs. Before the EC monitoring function is able to be executedthen the monitoring process can then be started.

1. Set the limits.
2. Set the interrupt masks.
3. Set the enable bits.

Figure 9-9. Application Example

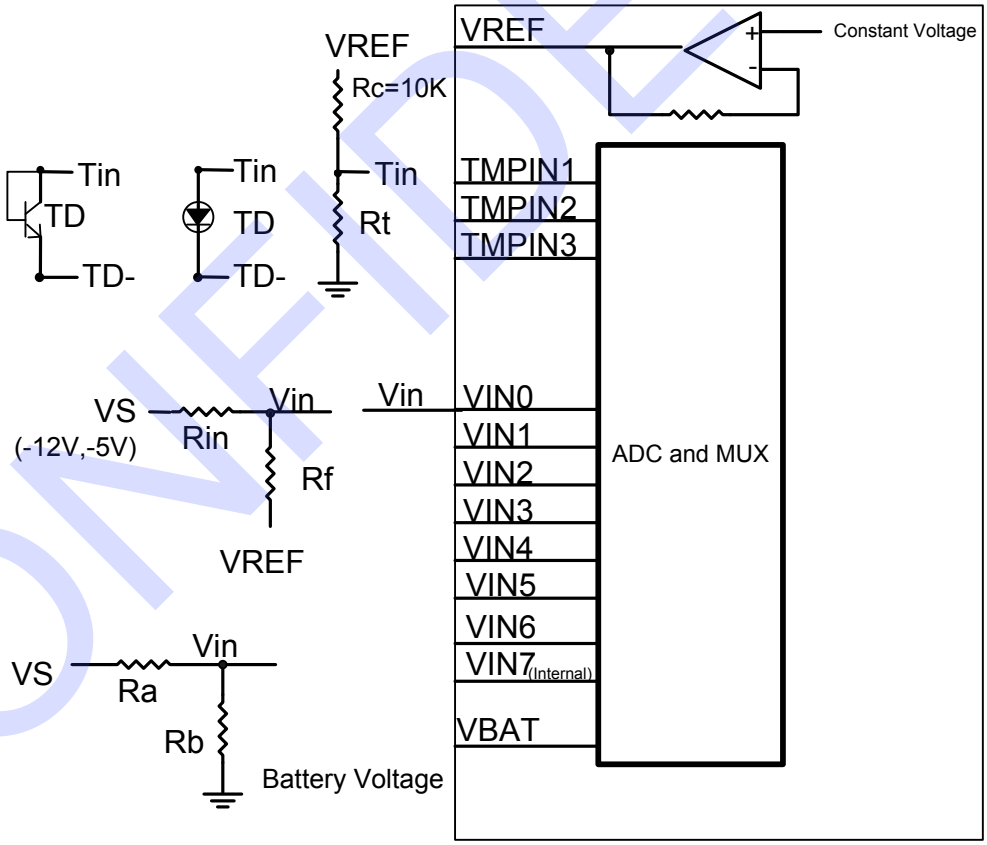

Note: The resistor should provide approximately 2V at the Analog Inputs.

CONFIDENTIAL

9.7.3.3 Voltage and Temperature Inputs

The 8-bit ADC has a 10.9mVLSB with an input range from 0V to2.8V. The 2.5V supplies of PC applications can be directly connected to the inputs. When the input voltage is greated than 2.8V,it is necessary to divide the input voltageinto an acceptable range. When the divided circuit is used to measure the positive voltage, the recommended range for Ra and Rb is from 10KΩ to 100KΩ. The negative voltage can be measured by the same divider, which is connected to VREF (constant voltage, 2.8V), and donot attempt to measure it with the divider connected to the ground. The EC temperature measurement system converts the voltage of the TMPINs to 8-bit two's-complement. The system also includes an OP amp providing a constant voltage, an external thermistor, a constant resistance, the ADC and a conversion table ROM.

Temperature	Digital Output Format	
	Binary	Hex
+ 125°C	01111101	7Dh
+ 25°C	00011001	19h
+ 1°C	00000001	01h
+ 0°C	00000000	00h
- 1°C	11111111	FFh
- 25°C	11100111	E7h
- 55°C	11001001	C9h

With the addition of the external application circuit, the actual voltages are calculated below:

Positive Voltage: Vs = Vin X (Ra+Rb) / Rb
Negative Voltage: Vs = (1+Rin/Rf) X Vin – (Rin/Rf) X VREF

All the analog inputs are equipped with the internal diodes that clamp the input voltage exceeding the power supply and ground;nevertheless, the current limiting input resistor is recommended since no dividing circuit is available.

9.7.3.4 Layout and Grounding

A separate and low-impedance ground plane for analog ground is essentialto achieve accurate measurement. The analog ground also provides a ground point for the voltage dividers including the temperature loops and analog components. Analog components such as voltage dividers, feedback resistors and the constant resistors of the temperature loops should be located as closely as possible to the IT8625E. However, the thermistors of the temperature loops should be positioned within the measuring area. In addition, the power supply bypass and the parallel combination of 10μF and 0.1μF bypass capacitors connected between AVCC3 and analog ground also needs to be located as closely as possible to the IT8625E.

Due to the small differential voltage of thermal diode (diode-connected transistor), it is necessary to adhere to the steps below for PCB layout.

- Position the sensor as closely as possible to the EC.
- The sensor ground should be directly shorted to GNDA with excellent noise immunity.
- Keep traces away from any noise sources. (High voltage, fast data bus, fast clock , CRTs …)
- Use trace width of10 mil minimum and provide guard ground (flanking and under).
- Position 0.1μF bypass capacitors as closely as possible to IT8625E.

CONFIDENTIAL

9.7.3.5 Fan Tachometer

The Fan Tachometer inputs gate a 22.5 kHz clock into an 8-bit or 16-bit counter (maximum count=255 or 65535) for one period of the input signals. Counts are based on twopulses per revolution for tachometer output.

RPM = 1.35 X 10^6 / (Count X Divisor) ; (Default Divisor = 2)

The maximum input signal range is from 0 to VCC. Anadditional external circuitis needed to clamp the input voltage and current.

9.7.3.6 Interrupt of the EC

The EC generates interrupts as a result of each of its Limit registers on the analog voltage, temperature, and FAN monitor. All the interrupts are indicated in two Interrupt Status Registers. The IRQ and SMI# outputs have individual mask registers. These two Interrupts can also be enabled/disabled byConfiguration Register (Index=00h, Default=18h)(refer to page 107). The Interrupt Status Registers will be reset after a read operation. When the Interrupt Status Registers are cleared, the Interrupt lines will also be cleared. When a read operation is completed before the completion of the monitoring loop sequence, it indicates an Interrupt Status Register has been cleared. It takes EC 1.5 seconds to allow all the EC Registers to be safely updated between completed read operations. When bit 3 of the Configuration Register is set to high, the Interrupt lines are cleared and the monitoring loop will be stopped. The loop will resume after this bit is cleared.

All analog voltage inputs have both high and low Limit Registers to generate interruptswhereas FAN monitoring inputs only have low Limit Register to warn the host. The IT8625E provides three modes dedicated to temperature interrupts in the EC: “Interrupt” mode, “Enhanced Interrupt” mode and “Comparator” mode.

Interrupt Mode
An interrupt will be generated whenever the temperature exceeds Th limit, and the corresponding interrupt status bits will be set to high until being reset by reading Interrupt Status Register 3 (Index=03h, Default=00h) (refer to page 108). Once an interrupt event occurs by exceeding Th limit, an interrupt will only occur again when the temperature goes below TL limit after being reset. Again, it will set the corresponding status bit to high until being reset by readingInterrupt Status Register 3 (Index=03h, Default=00h) (refer to page 108).

Enhanced Interrupt Mode
When the enhanced interrupt mode is enabled (bit 3, 6 and 7 of General Control Register 2 (Index=0Ch, Default=00h) for TMPIN1, 2, and 3 respectively) (refer to page 109), an interrupt will be generated when the temperature is higher than the high limit or lower than the low limit.

Comparator Mode
This mode is entered when the TL limit register is set to 127°C. In this mode, an interrupt will be generated whenever the temperature exceeds the Th limit. The interrupt will also be cleared by reading Interrupt Status Register 3 (Index=03h, Default=00h) (refer to page 108), but the interrupt will be set again following the completion of another measurement cycle. It will remain set until the temperature goes below the Th limit.

Figure 9-10. Temperature Interrupt Response Diagram

CONFIDENTIAL

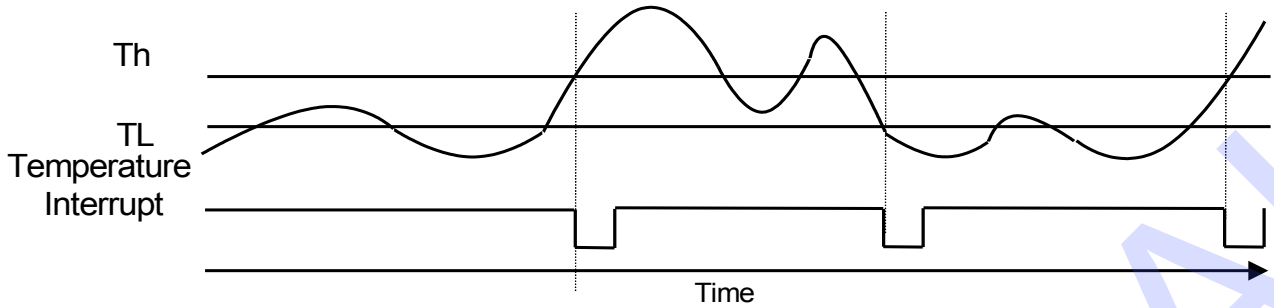

(a) Interrupt Mode

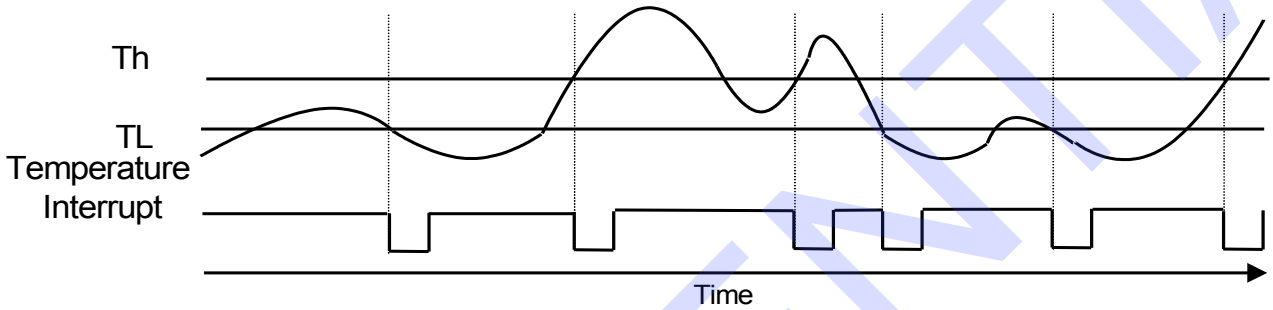

(b) Enhanced Interrupt Mode

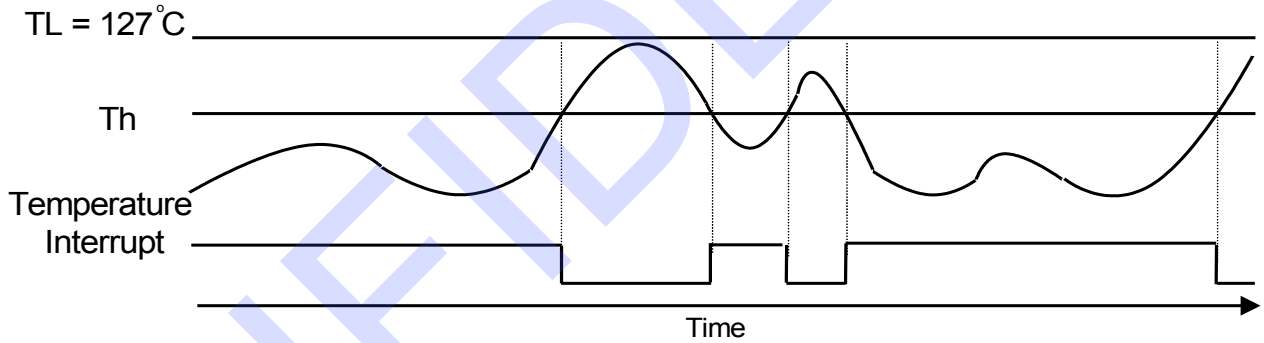

(c) Comparator Mode

CONFIDENTIAL

9.7.3.7 FAN Controller

9.7.3.7.1 Overview

IT8625Esupports 6 advanced fan controllers (FAN1~6) with SmartGuardian Mode. Each providesSoftware Mode and Automatic for selection. Please refer toFigure 9-11. FAN Mode Selection for the control mode selection provided by each fan. SmartGuardian Mode is with several selections for customers to choose depending on their requirments for the fan control. SmartGuardian Mode provides two selectins, Software Mode and Automatic Mode. For Software Mode, the value of PWM output and RPM can be set by program/BIOS accordingly.Please refer to section 9.7.3.7.2SmartGuardian - Software Mode for the detail. As for Automatic Mode, the PWM/RPM curve responds to the single temperature input or multi-temperature inputs in system (ex. CPU/PCH…, each fan can respond to up to6 temperature inputs simultaneously.).Please refer to Section 0

CONFIDENTIAL

SmartGuardian - Automatic Mode for the detail.

IT8625E supports both PWM control and RPM control in all fan control mode. For PWM control, FAN_CTRL generates the PWM output by 256 steps to control the fan speed while for RPMcontrol, FAN_TAC input generates the PWM output to control the fan speed.

IT8625E'sfan controllersfeature some enhancements such as Extra-Vector (refer to Section 9.7.3.7.6), Fan-Hysteresis (refer to Section 9.7.3.7.9), and Fan-Smoothing (refer to Section 9.7.3.7.10), with whichIT8625Eis able to provide more flexible and acoustic noise-prevention FAN control.

Figure 9-11. FAN Mode Selection

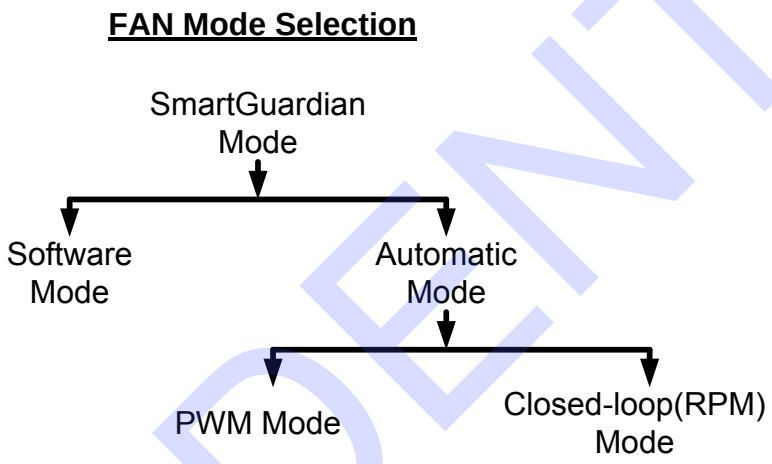

CONFIDENTIAL

9.7.3.7.2 SmartGuardian - Software Mode

Software Mode Enable Setting:
Enable SmartGuardian Mode (set to '1b', Index 13h[1-2] for FAN_1-6) and select Software Operation (set to '0b', Index 15h[7], 16h[7], 17h[7] 1Eh[7], 1Fh7[], 92h[7], for FAN_1-6).
FAN_1~6 control registers are Index 63h, 6Bh , 7Bh, 73h, and ABh.

PWM Control:
PWM output duty(%) = Control Value / 256
Control Value=Index 63h[7-0] or 6Bh[7-0] or 73h[7-0] or 7Bh[7-0] or A3h[7-0] or ABh[7-0]

RPM Control:
Target RPM = Control Value * 32
Control Value= Index 63h[7-0] or 6Bh[7-0] or 73h[7-0] or 7Bh[7-0] or A3h[7-0] or ABh[7-0]

Related Register:

Table 9-13. Software Mode Control Registers Summary

	FAN_CTLPWM Mode Automatic/Software Operation Selection	FAN_CTL Polarity	FAN_CTLSmartGuardian Automatic Mode Start PWM Registers	FAN_CTRL PWM Base Clock Select
FAN1	15h[7] = **0**	14h[7]	63h[7-0]	14h[6-4]
FAN2	16h[7] = **0**	14h[7]	6Bh[7-0]	55h[6-4]
FAN3	17h[7] = **0**	14h[7]	73h[7-0]	14h[6-4]
FAN4	1Eh[7] = **0**	14h[7]	7Bh[7-0]	14h[6-4]
FAN5	1Fh[7] = **0**	14h[7]	A3h[7-0]	14h[6-4]
FAN6	92h[7] = **0**	14h[7]	ABh[7-0]	14h[6-4]

CONFIDENTIAL

9.7.3.7.3 SmartGuardian - Automatic Mode

Automatic Architecture:
Figure 9-12 illustrates the Automatic Mode FAN curve.
Left: PWM mode control
Right: RPM mode control
The PWM/RPM value is subject to the temperature inputs.
The register summary is listed in Table 9-14.

Figure 9-12. Automatic FAN Architecture

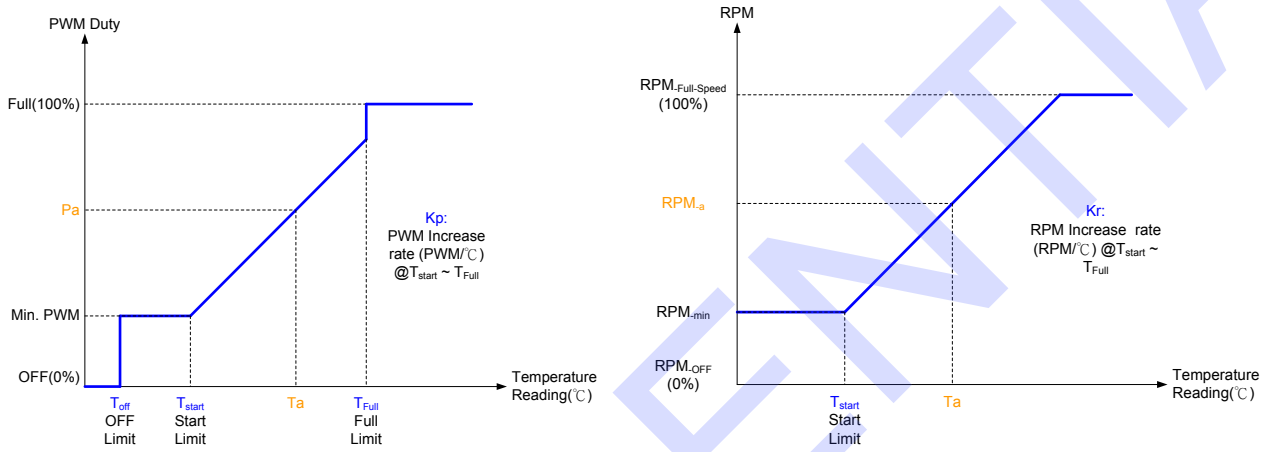

The control registers are described as the followings:

OFF Limit : Temperature Limit Value of FAN OFF
START Limit : Temperature Limit Value of FAN START
Full Limit : Temperature Limit Value of FAN FULL (PWM Control Only)
Minimum PWM/RPM : PWM/RPM keep value as " OFF_Limit < Temperature < START_Limit "
Slope of PWM/RPM : PWM/RPM increase rate per ℃ as "START_Limit < Temperature < FULL_Limit"

Table 9-14. Automatic FAN Control Registers Summary

	Temperature Limit of FAN OFF	Temperature Limit of FANSTART	Temperature Limit of Full Speed	Minimum PWM/RPM	Slope of PWM/RPM
FAN1	60h	61h	62h	63h	64h
FAN2	68h	69h	6Ah	6Bh	6Ch
FAN3	70h	71h	72h	73h	74h
FAN4	78h	79h	7Ah	7Bh	7Ch
FAN5	A0h	A1h	A2h	A3h	A4h
FAN6	A8h	A9h	AAh	ABh	ACh

CONFIDENTIAL

9.7.3.7.4 SmartGuardian - PWM Automatic Mode

In the PWM automatic mode, the PWM value is subject to the temperature inputs witha linear change. The change of the PWM output (Pa) depends on Ta (one temperature reading of Hardware monitor).

Figure 9-13. PWM Automatic Mode

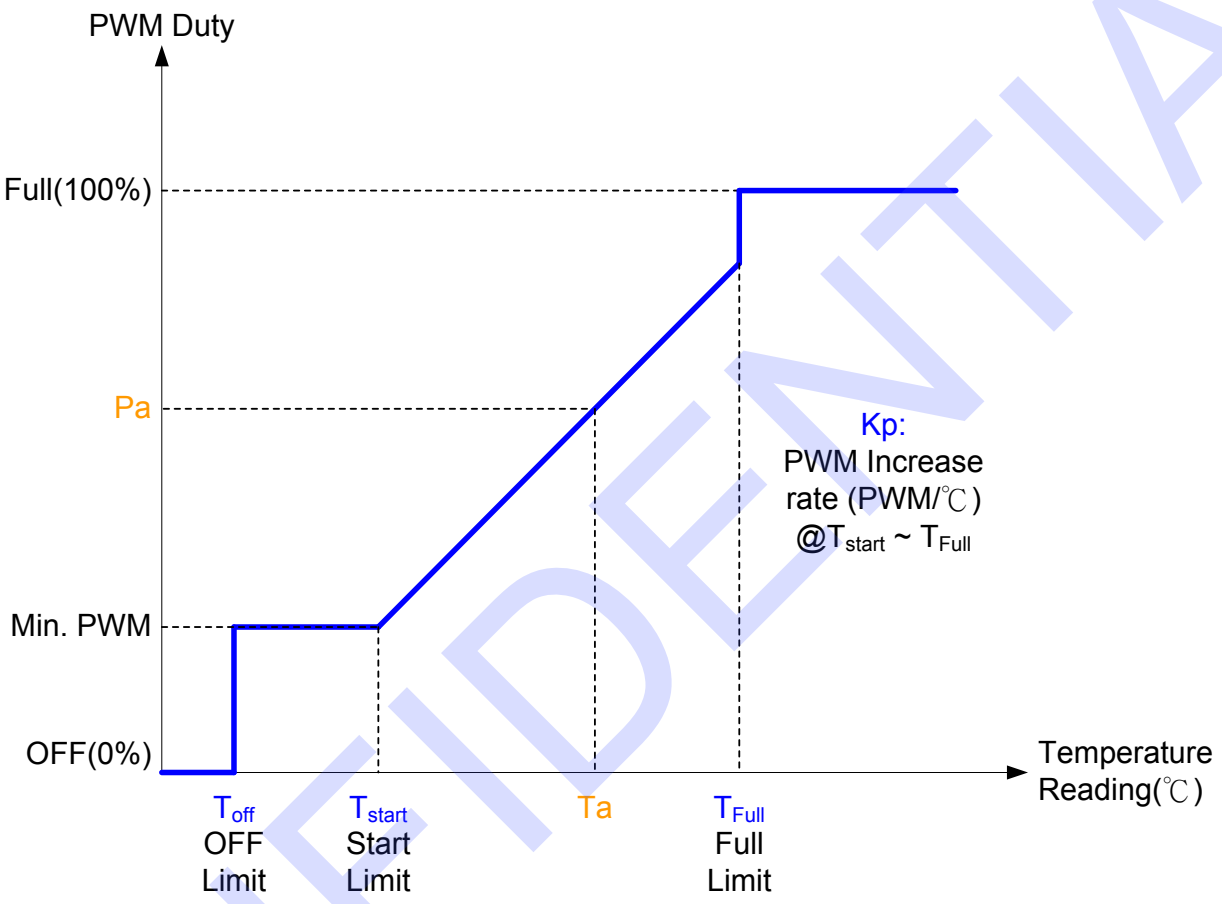

PWM Output (Pa) Conditions

Pa is OFF (0%) state.	; Ta< OFF-Limit
Pa keep at Min. PWM.	;OFF-Limit < Ta < Start-Limit
Pa = Min.-PWM + (Ta - T_{start}) * Kp	; Start-Limit < Ta < Full-Limit
Pa is Full(100%) state.	; Ta > Full-Limit

CONFIDENTIAL

9.7.3.7.5 SmartGuardian– Closedloop (RPM) Automatic Mode

In the Closed-loop (RPM) automatic mode, the target RPM value is subject to the temperature inputs witha linear change. The required RPMcan be maintained by increasing or decreasing the PWM duty of the FAN_CTL pin.

Figure 9-14. Closed-loop (RPM) Automatic Mode

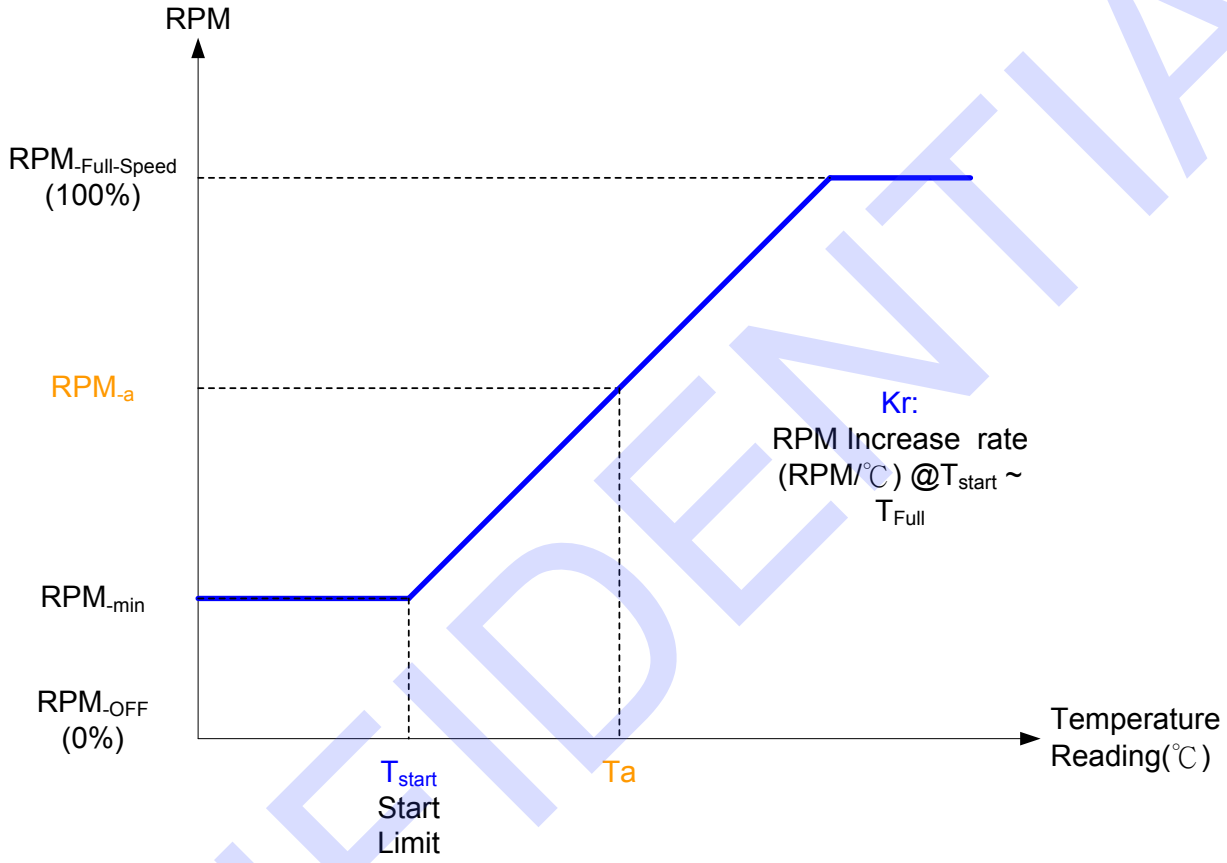

RPM Control (PPM-a) Conditions:

PPM-a = RPM-min = 16 * RPM-min Value ; OFF-Limit < Ta < Start-Limit

PPM-a = RPM-min + (Ta - T_{start}) * Kp * 8 ; Start-Limit < Ta < Full-Limit

CONFIDENTIAL

9.7.3.7.6 Extra Vectors

IT8625E provides Extra-Vector for flexible FAN control. Each FAN has three extra vectorsindividually. The usage model of it is as the following:
Set Extra-Vector as an individual PWM/RPM value.
The target PWM/RPM will be the SUM of Extra-vector and the current PWM/RPM.
Extra-Vector can only be implemented in Automatic Mode.
Extra-Vector can be implemented as the following features:

- **Multi-Curve:** The FAN curve can be multi-segment between START and FULL-ON and each segment has an individual slope. (Maximum four curves* Note1)
- **Multi-Sensor:**Multiple temperature sensors to control/affect the use of a single fan. (Maximum four sensors, *Note1)
- **Over-Temperature protect:** FAN outputs maximum PWM/RPM once the temperature reading reaches the FULL-ON temperature.
- **Negative Slope**

***Note1**: Each FAN (FAN1~6)has three extra vectors，and the multi-sensor feature is no longer available If all extra vectors are implemented as multi-curve.

Here are the description of Extra-Vector registers. FAN 1~6 and Extra-Vector A, B, C registers are shown in Table 9-15.

- **Extra-Vector Enable** : 0: Disable; 1: Enable
- **START Limit** : Temperature Limit Value of Fan Extra-Vector Start
- **Temperature Input** : Refer to Section 9.7.3.7.11FAN Temperature Input
- **Positive/Negative Slope** : 0:Positive; 1: Negative
- **Slope Value** : Slope value of Extra-Vector
  PWM Control: Slope = bit[6-0] (PWM/℃)
  RPM Control: Slope = bit[6-0] *8 (RPM/℃)
- **Range** : These bits determine the extra vector range after the temperature limit. If the input temperature > (temperature limit + Range[6:0]), the vector will equal the value of (temperature limit + Range[6:0]). If Range[6:0]=00h, it means no range limit.

CONFIDENTIAL

Table 9-15. FAN Extra-Vector Registers

Note: These registers are in Bank 2.

	Ex-Vector	Extra-Vector Enable	START Limit	Temperature Input	positive/ Negative Slope	Slope value	Range	Full Limit
FAN1	A	11h[7]	10h	12h[7-5]	13h[7]	11h[6-0]	13h[6-0]	N/A
	B	15h[7]	14h	16h[7-5]	17h[7]	15h[6-0]	17h[6-0]	N/A
	C	19h[7]	18h	1Ah[7-5]	1Bh[7]	19h[6-0]	1Bh[6-0]	1Ch
FAN2	A	21h[7]	20h	22h[7-5]	23h[7]	21h[6-0]	23h[6-0]	N/A
	B	25h[7]	24h	26h[7-5]	27h[7]	25h[6-0]	27h[6-0]	N/A
	C	29h[7]	28h	2Ah[7-5]	2Bh[7]	29h[6-0]	2Bh[6-0]	2Ch
FAN3	A	31h[7]	30h	32h[7-5]	33h[7]	31h[6-0]	33h[6-0]	N/A
	B	35h[7]	34h	36h[7-5]	37h[7]	35h[6-0]	37h[6-0]	N/A
	C	39h[7]	38h	3Ah[7-5]	3Bh[7]	39h[6-0]	3Bh[6-0]	3Ch
FAN4	A	41h[7]	40h	42h[7-5]	43h[7]	41h[6-0]	43h[6-0]	N/A
	B	45h[7]	44h	46h[7-5]	47h[7]	45h[6-0]	47h[6-0]	N/A
	C	49h[7]	48h	4Ah[7-5]	4Bh[7]	49h[6-0]	4Bh[6-0]	4Ch
FAN5	A	51h[7]	50h	52h[7-5]	53h[7]	51h[6-0]	53h[6-0]	N/A
	B	55h[7]	54h	56h[7-5]	57h[7]	55h[6-0]	57h[6-0]	N/A
	C	59h[7]	58h	5Ah[7-5]	5Bh[7]	59h[6-0]	5Bh[6-0]	5Ch
FAN6	A	61h[7]	60h	62h[7-5]	63h[7]	61h[6-0]	63h[6-0]	N/A
	B	65h[7]	64h	66h[7-5]	67h[7]	65h[6-0]	67h[6-0]	N/A
	C	69h[7]	68h	6Ah[7-5]	6Bh[7]	69h[6-0]	6Bh[6-0]	6Ch

CONFIDENTIAL

9.7.3.7.7 Multi-Curve FAN Control

Multi-Curve methodology:
Set the same temperature inputs to Extra-Vector as that of the original FAN, and the PWM/RPM will be changed once the temperature reaches the Extra-Vector START Limit. For example, CPU FAN keeps low PWM/RPM slope while the temperature is lower than Extra-Vector.Once the CPU temperature reaches the setting-point, CPU FAN will increase the PWM/RPM as the slope which is subjected to Extra-Vector. Figure 9-15illustrates that the addition of Extra-Vector curve (Figure B) and FAN curve (Figure A) equals Multi-curve curve (Figure C).

PWM Output (Pa) Conditions

Pa is OFF(0%) state. ;Ta< OFF-Limit
Pa keep at Min. PWM. ;OFF-Limit < Ta < Start-Limit
Pa = [Min.-PWM + (Ta - T_{start}) * (Kp1)] ; Start-Limit < Ta <EX-Start Limit
Pa = [Min.-PWM + (Ta - T_{start}) * (Kp1)]
+ [(Ta – EX-T_{start}) * (Kp2)]
; EX-Start Limit< Ta < Full-Limit
Pa is Full(100%) state. ; Ta > Full-Limit

Figure 9-15. Multi-Curve Fan Control

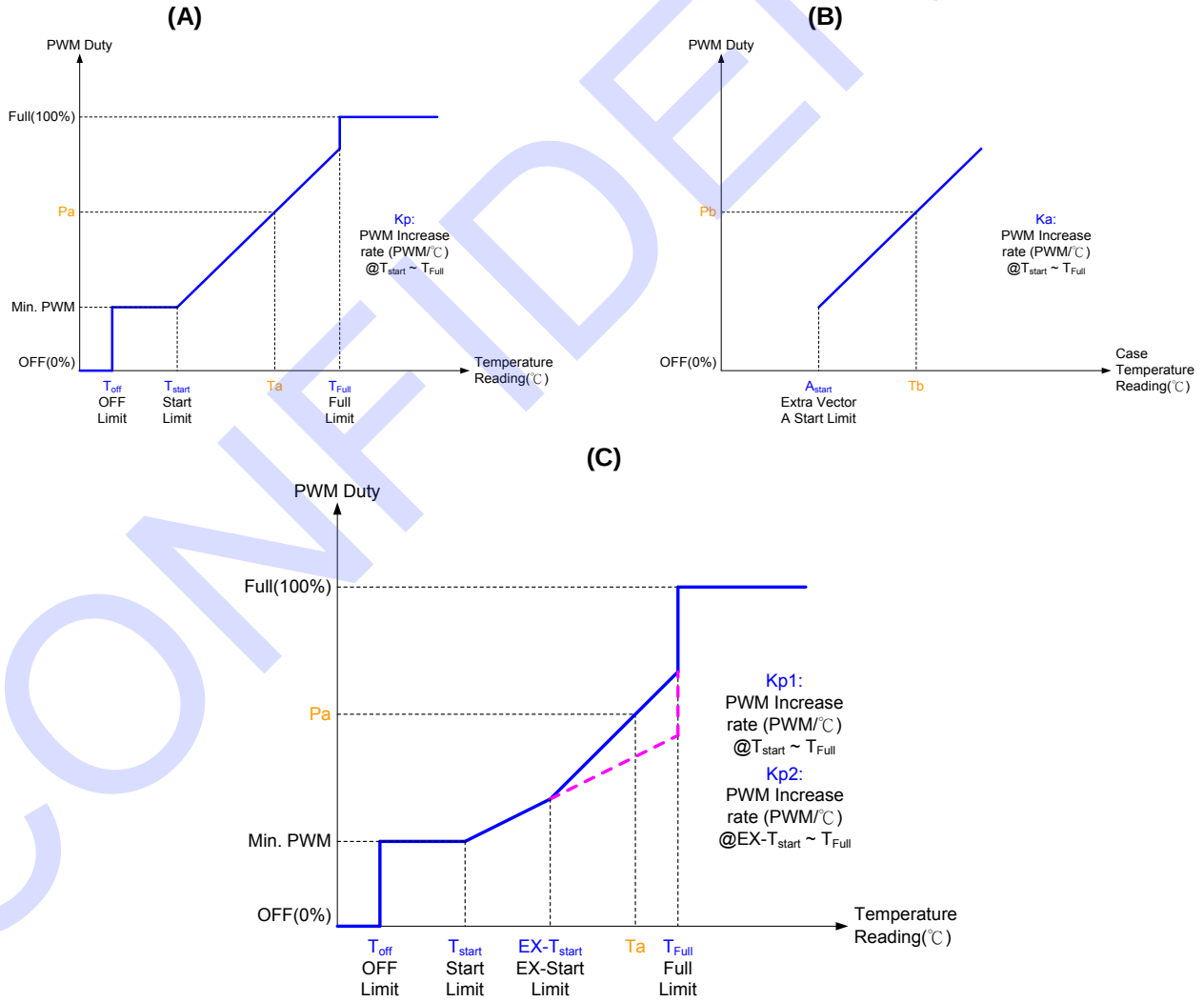

CONFIDENTIAL

9.7.3.7.8 Multi-Sensor FAN Control

Multi-Sensor methodology:
Set different temperature inputs to Extra-Vector from that of the original FAN and the PWM/RPM will keep on same slope until reaching the Extra-Vector setting-point, For example, The system FAN monitors not only system but also CPU temperature, and once the CPU temperature reaches the Extra-Vector setting-point, the system FAN will increase the PWM/RPM as the slope which is subjected to Extra-Vector. Figure 9-16 illustrates that the addition of Extra-Vector curve (Figure B) and FAN curve (Figure A), equals Multi-sensor curve (Figure C).

PWM Output (Pa) Conditions

P_{out} is OFF(0%) state.	;Ta< OFF-Limit , Tb < A_{start}
P_{out} keep at Min. PWM.	;OFF-Limit < Ta < Start-Limit, Tb < A_{start}
P_{out} = [Min.-PWM + (Ta - T_{start}) * (Kp)] + [(Tb –A_{startt}) * (Ka)]	; Start-Limit < Ta < Full-Limit, Tb > A_{start}
P_{out} is Full(100%) state.	; Ta > Full-Limit

Figure 9-16. Multi-Sensor Fan Control

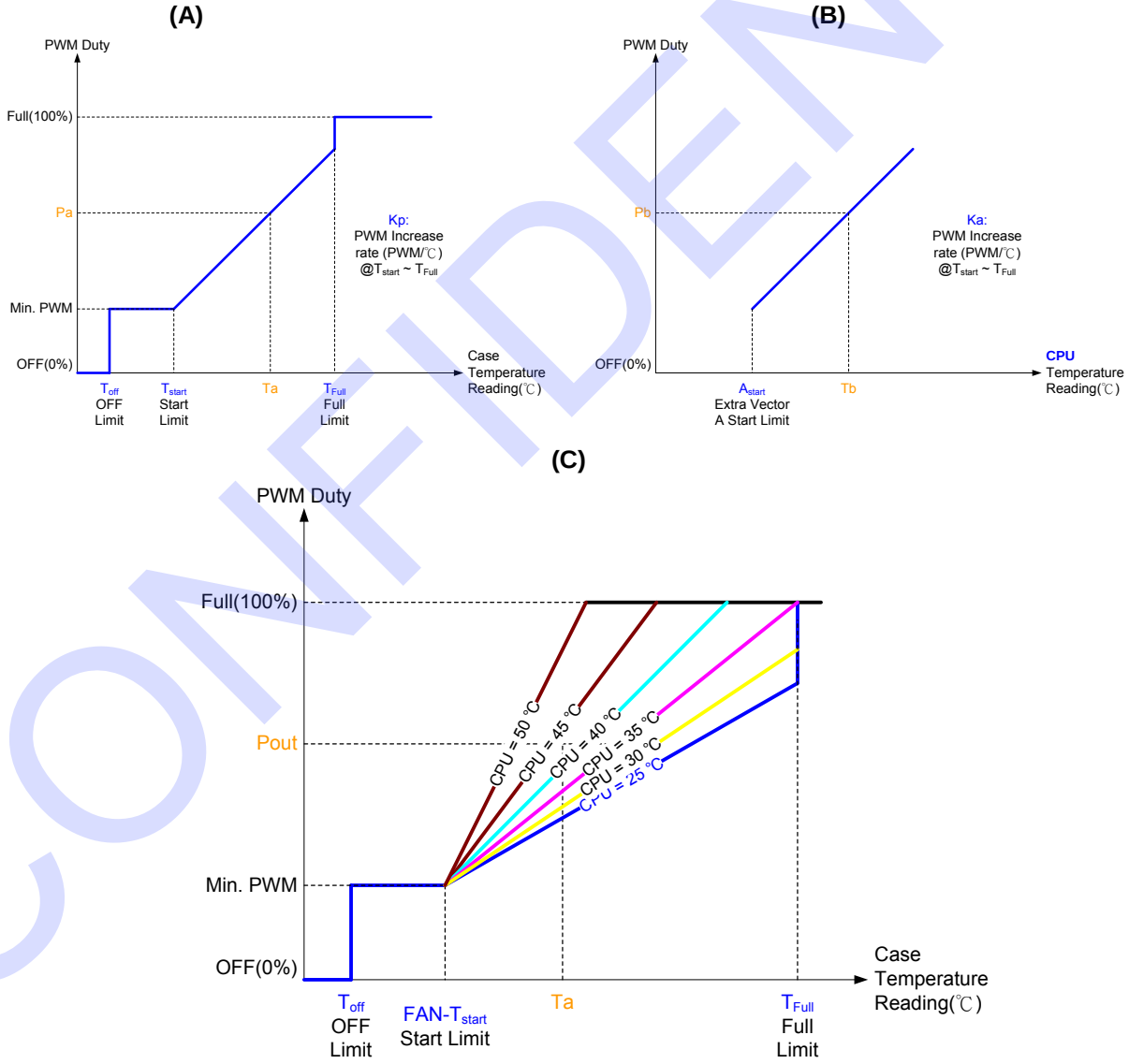

CONFIDENTIAL

9.7.3.7.9 Fan Control Hysteresis

Fan Control Hysteresis is to stabilize the fan speed so the PWM/RPM output won't be adjusted due to little change of temperature. It reduces the ambient noise from high Fan speed or full Fan speed triggered by a certain temperature when the low temperature is set to the minimum Fan speed. Below is the chart illustrating the correlation between the PWM duty and temperature reading after Fan Hysteresis is enabled and the related registers are shown in the following table as well.

Figure 9-17. Fan Control Hysteresis

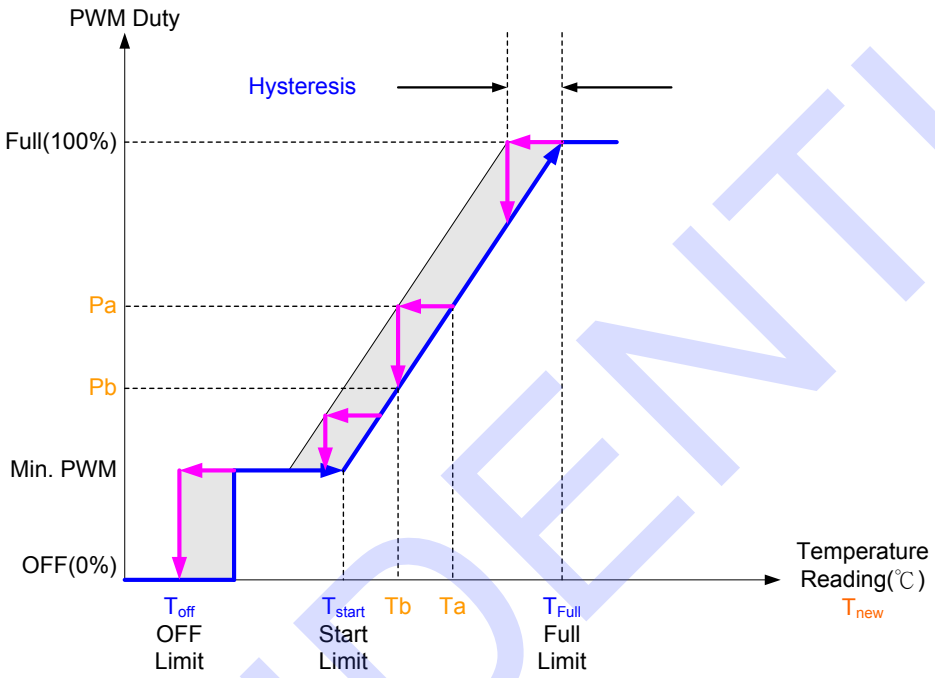

If T_{new} > Ta

P_{new} = Min.-PWM + (T_{new} - T_{start}) * Kp

If Ta> T_{new}>Tb

P_{new} = **Pa**

If T_{new} < Tb

P_{new} = Min.-PWM + (T_{new} - T_{start}) * Kp

Related Register:

Table 9-16. FAN Hystersis & Smoothing Control Registers Summary

	△ -Temperature Interval [4:0]	FAN Smoothing	FAN PWM Smoothing Step Frequency Selection
FAN1	65h[4-0]	64h[7]	Bank2,5Dh[5-0]
FAN2	6Dh[4-0]	6Ch[7]	Bank2,5Eh[5-0]
FAN3	75h[4-0]	74h[7]	Bank2,5Fh[5-0]
FAN4	7Dh[4-0]	7Ch[7]	Bank2,6Dh[5-0]
FAN5	A5h[4-0]	A4h[7]	Bank2,6Eh[5-0]
FAN6	ADh[4-0]	ACh[7]	Bank2,6Fh[5-0]

CONFIDENTIAL

9.7.3.7.10 Fan Control Smoothing

Fan Control smoothing is to make hysteresis to the fan speed according to the setting value of PWM/RPM. It is to prevent the acoustic noise and abnormality monitor caused from frequently-changing temperature of objectives. Please refer to Figure 9-18 for Fan control smoothing and related registersshown in the following table.

Figure 9-18. Fan Control Smoothing

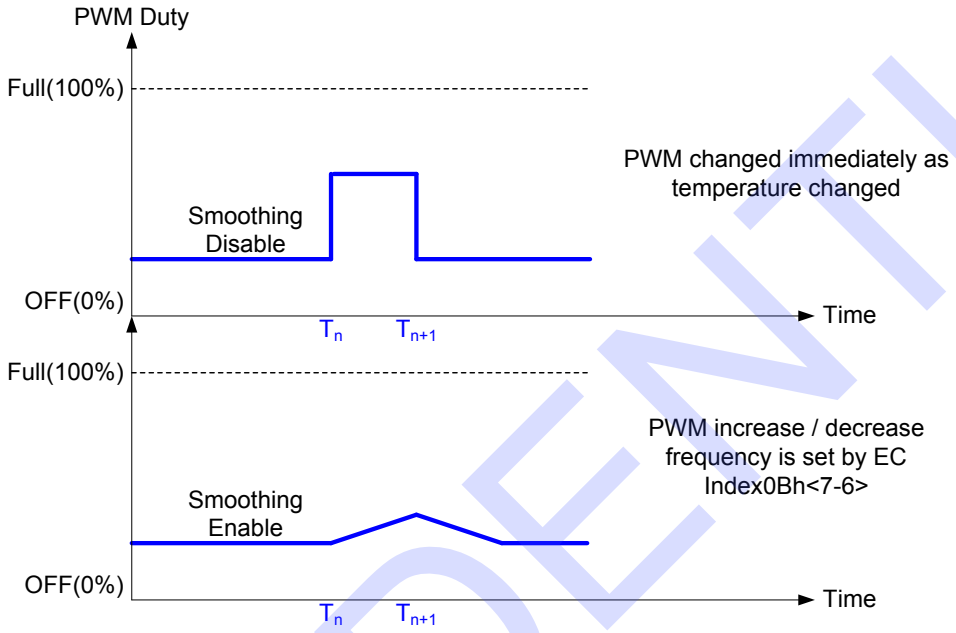

Related Register: Please refer to Table 9-16 for the detail.

CONFIDENTIAL

9.7.3.7.11 FAN Temperature Input

IT8625E's Fan Controller supports 6 temperature inputs (29h~2Eh) mapped to all fan controllers and extra vectors. Each temperature input is from 16 sources, Thermal Diode/Thermistor (3 sets), PECI (PECI 0x30~0x35, max. 6 CPUs), SM-Link (PCH, MCH, DIMM0~3), SMBUS (1 channel). Please refer to Figure 9-19for the overview of the mapping structure.

Figure 9-19. FAN Controller Overview

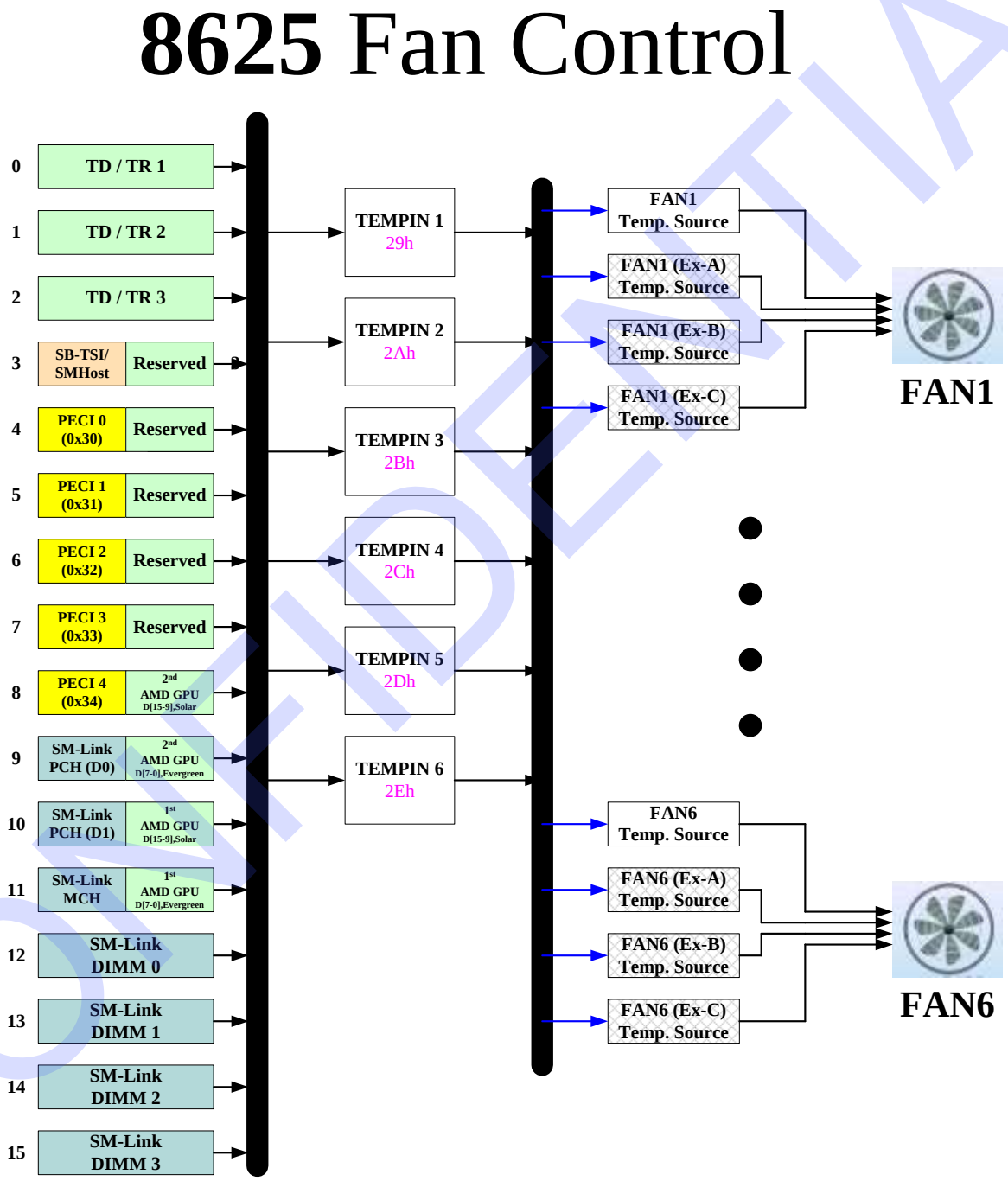

CONFIDENTIAL

Table 9-10. TMPIN Source Selection Table

TMPIN Source	TMPIN Source Selection – 1 (TSS1) Refer to Table 9-10	TMPIN Source Selection- 2 (TSS2) Refer to Table 9-10 & Table 9-11
TMPIN1 (29h)	Bank2,1Dh[3-0], default=0000b	Bank2,3Dh[0], default=0b
TMPIN2 (2Ah)	Bank2,1Dh[7-4], default=0000b	Bank2,3Dh[1], default=0b
TMPIN3 (2Bh)	Bank2,1Eh[3-0], default=0000b	Bank2,3Dh[2], default=0b
TMPIN4 (2Ch)	Bank2,1Eh[7-4], default=0000b	Bank2,3Dh[3], default=0b
TMPIN5 (2Dh)	Bank2,1Fh[3-0], default=0000b	Bank2,3Dh[4], default=0b
TMPIN6 (2Eh)	Bank2,1Fh[7-4], default=0000b	Bank2,3Dh[5], default=0b

Table 9-11. TMPIN Source Selection – 1 (TSS1)

Bit[3-0]	TMPIN Source			Switch Register
0000	TMPIN1(TD1)		TMPIN1(TR1)	51h[bit 0 & 3]
0001	TMPIN2(TD2)		TMPIN2(TR2)	51h[bit 1 & 4]
0010	TMPIN3(TD3)		TMPIN3(TR3)	51h[bit 2 & 5]
0011	SB-TSI / SM-Host		Reserved	Refer to Table 9-12 TSS2
0100	PECI1(0x30) Domain0		Reserved	Refer to Table 9-12 TSS2
0101	PECI2(0x31) Domain0		Reserved	Refer to Table 9-12 TSS2
0110	PECI3(0x32) Domain0		Reserved	Refer to Table 9-12 TSS2
0111	PECI4(0x33) Domain0		Reserved	Refer to Table 9-12 TSS2
1000	PECI5(0x34) Domain0		2nd AMD GPU Temperature, for Solar Family	Refer to Table 9-12 TSS2
1001	PCH from SM-Link (Data 0)	PCH over eSPI OOB	2nd AMD GPU, Temperature for EveryGreen Family	N/A
1010	PCH from SM-Link (Data 1)		1st AMD GPU Temperature for Solar Family	9Eh[bit 1]=1
1011	MCH from SM-Link		1st AMD GPU Temperature for EveryGreen Family	9Eh[bit 1]=1
1100	DIMM0 from SM-Link		AMD CPU DTS(SB-TSI)	Refer to Table 9-11 TSS2
1101	DIMM1 from SM-Link		MxM GPU	Refer to Table 9-11 TSS2
1110	DIMM2 from SM-Link		PECI Bridge PECI0	Bank2, 72h[bit 0]=1 , 72h[bit 2]=0
1111	DIMM3 from SM-Link		PECI Bridge PECI 0&1	Bank2, 72h[bit 0]=1 , 72h[bit 2]=1

Table 9-12. TMPIN Source Selection – 2 (TSS2)

TMPIN Source Selection 2	
Register = '0b'	**Register = '1b'**
SB-TSI / SM-Host	Reserved
PECI1(0x30) Domain0	Reserved
PECI2(0x31) Domain0	Reserved
PECI3(0x32) Domain0	Reserved
PECI4(0x33) Domain0	Reserved
PECI5(0x34) Domain0	2nd AMD GPU Temperature, for Solar Family
PCH from SM-Link (Data 0)	2nd AMD GPU, Temperaturefor EveryGreen Family
PCH from SM-Link (Data 1)	N/A
MCH from SM-Link	N/A
DIMM0 from SM-Link	AMD CPU DTS(SB-TSI)
DIMM1 from SM-Link	MxM GPU

CONFIDENTIAL

9.7.3.8 External Thermal Sensor Programming Procedure

Figure 9-20. PECI Programming Procedure

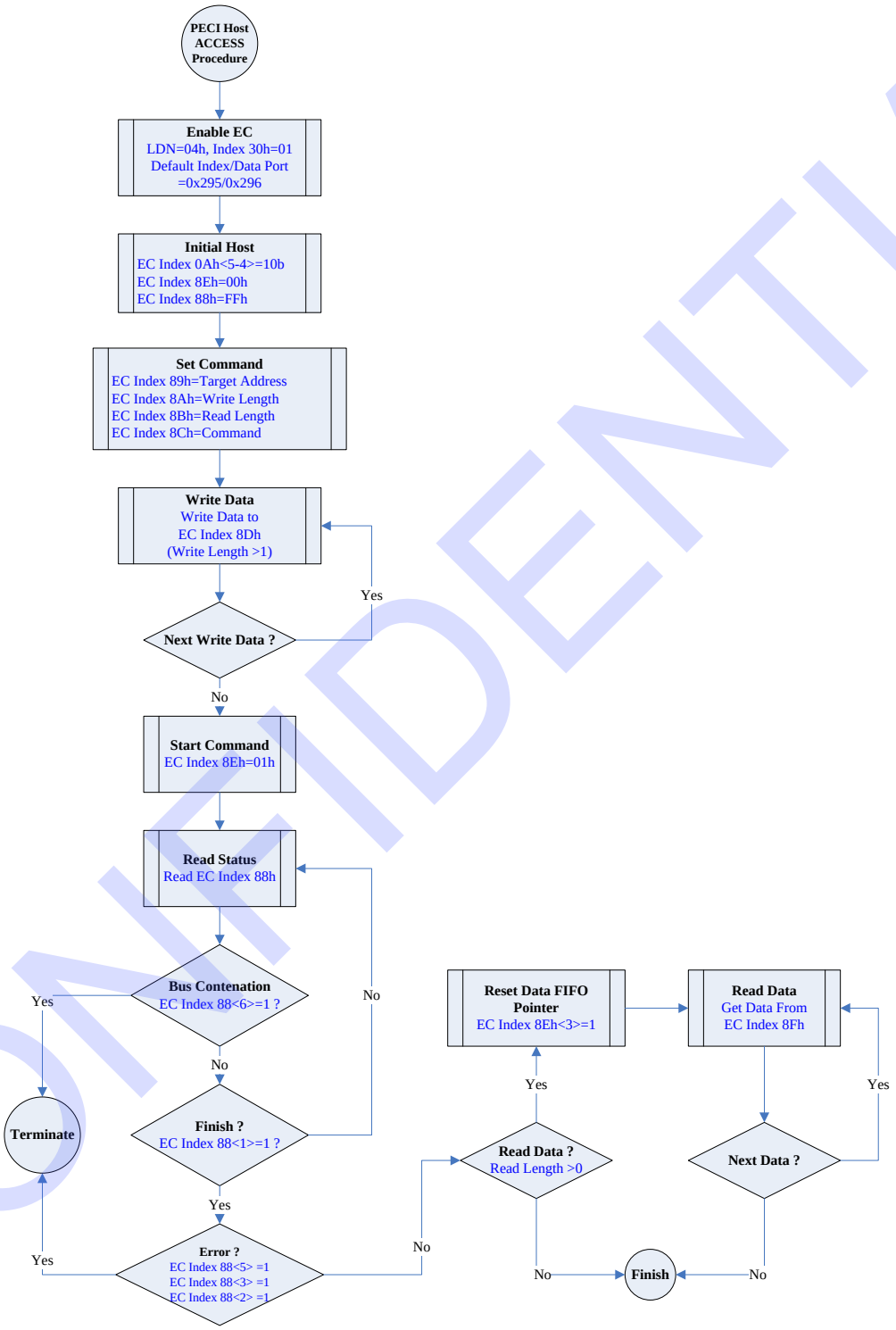

CONFIDENTIAL

Figure 9-21. SMBUS Host Programming Procedure

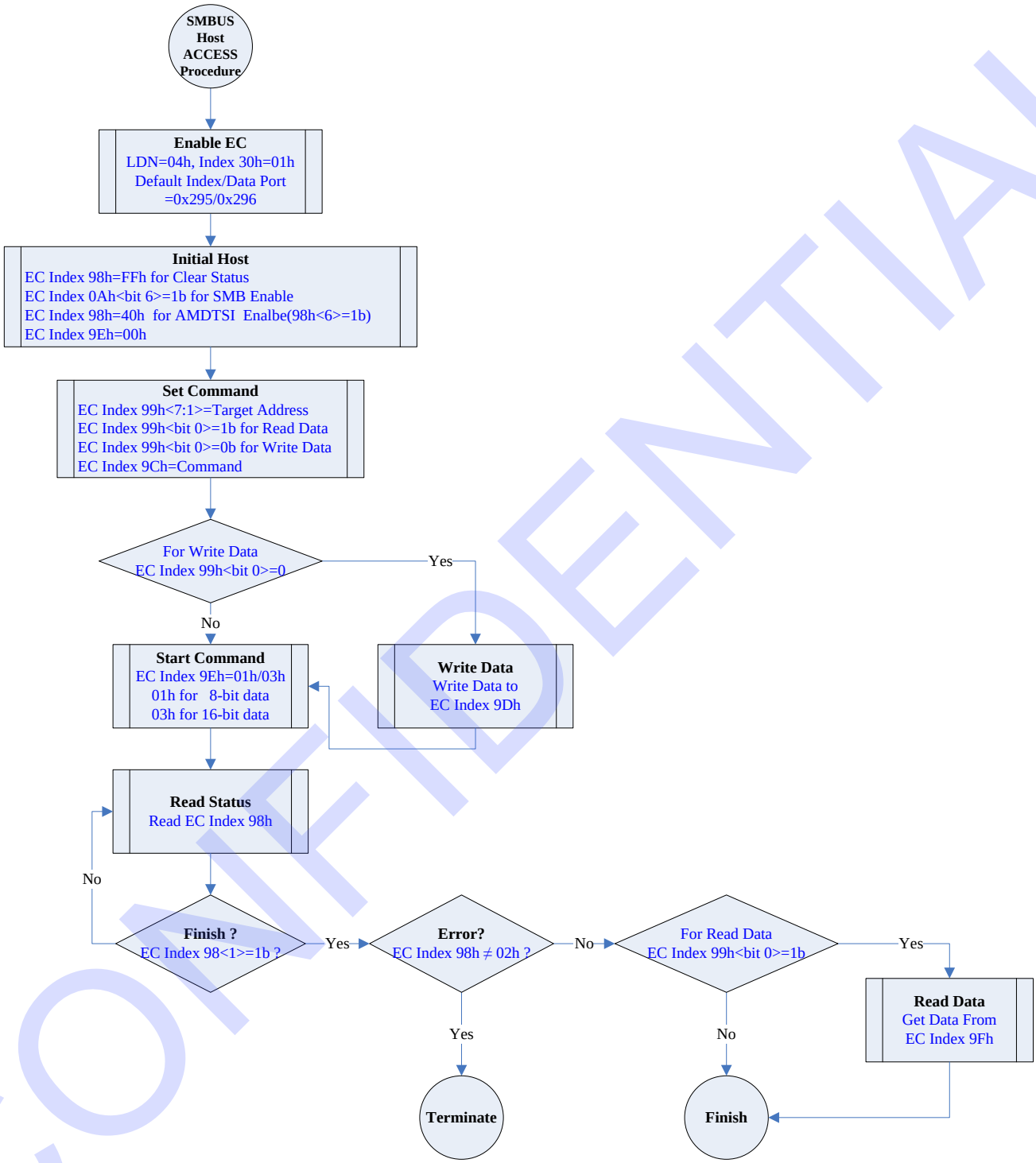

CONFIDENTIAL

Figure 9-22. SB-TSI Host Programming Procedure

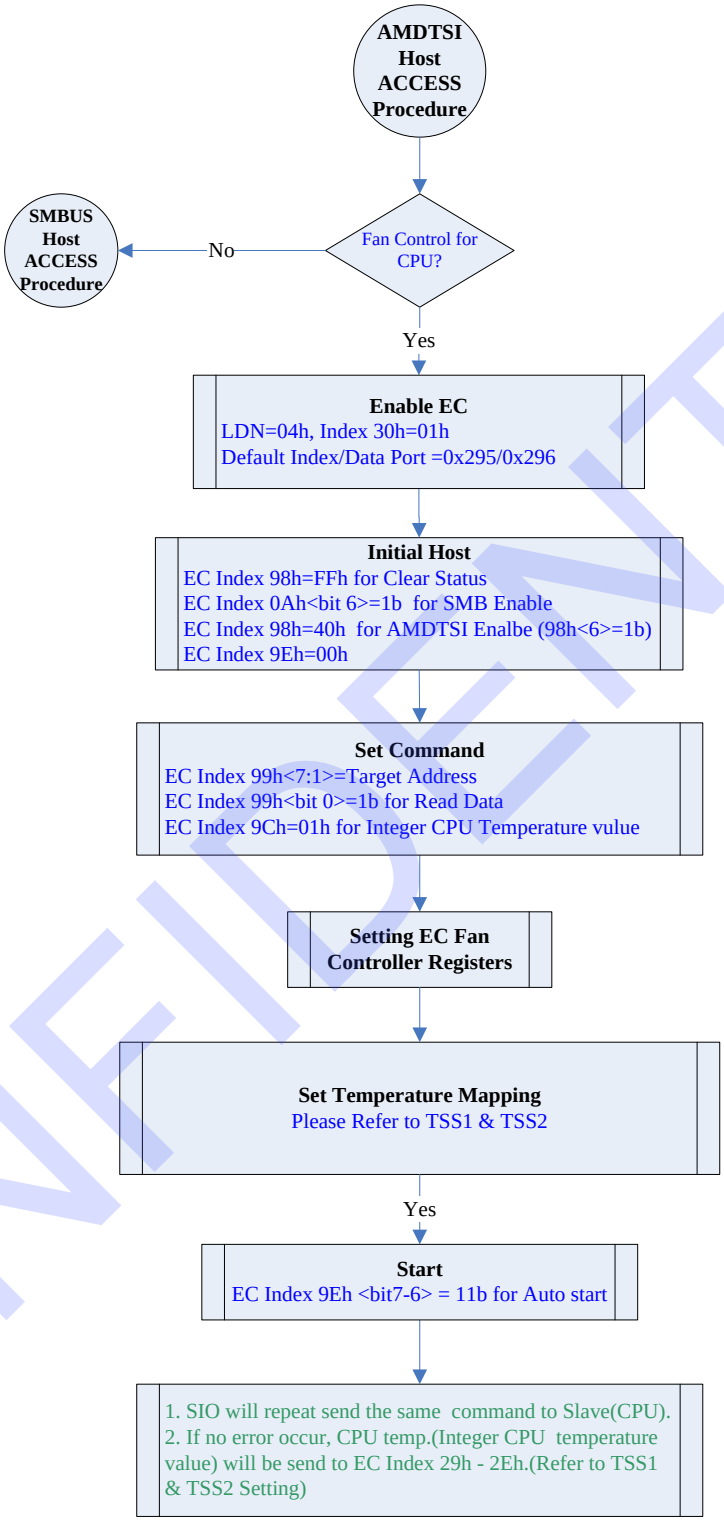

CONFIDENTIAL

Figure 9-23. PCH SM-Link Programming Procedure

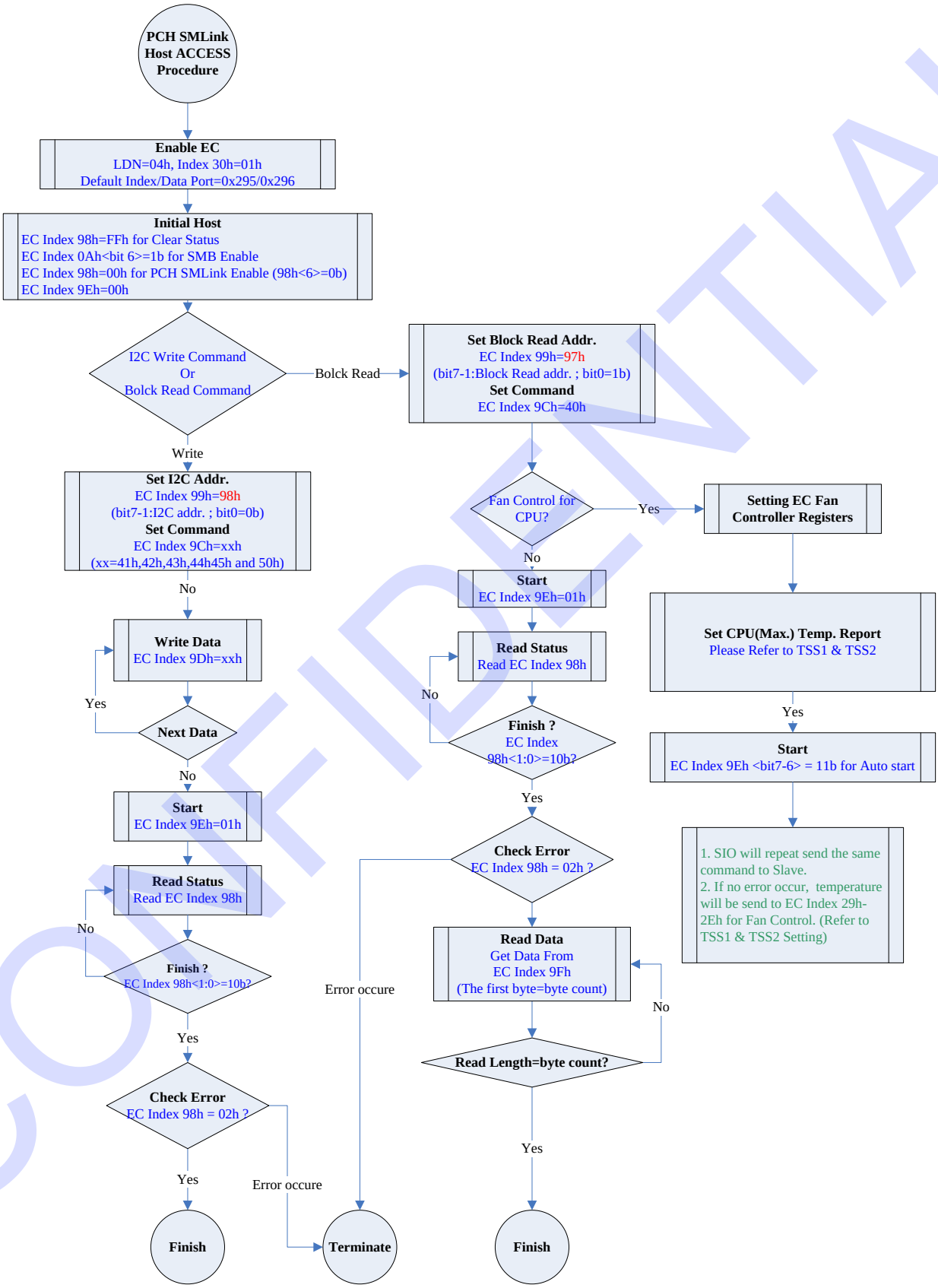

CONFIDENTIAL

Figure 9-24. DTS Multi-Scan Programming Procedure

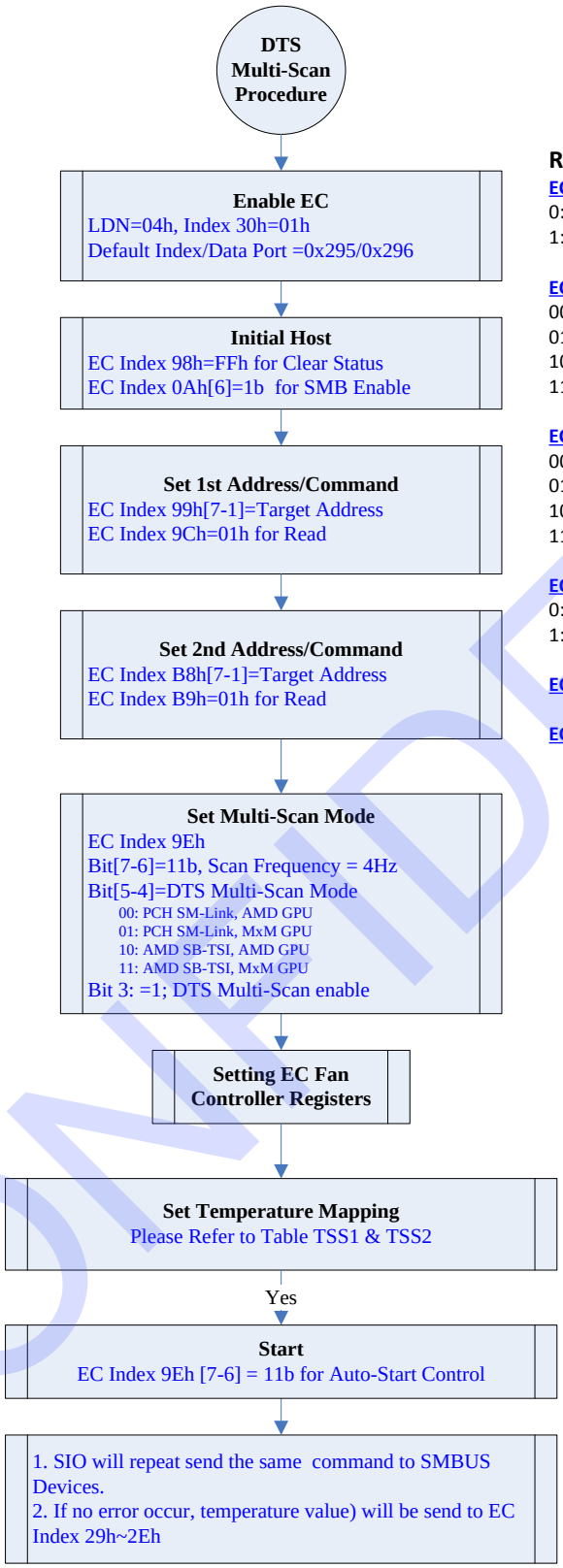

Registers Reference:

EC ,Index 0A[6]
0: SMB disable
1: SMB enable

EC ,Index 9E[7-6]: Auto-start control
00: Disable auto control
01: 16Hz
10: 8Hz
11: 4Hz

EC ,Index 9E[5-4]: DTS Multi-Scan selection
00: PCH SM-Link, AMD GPU
01: PCH SM-Link, MxM GPU
10: AMD SB-TSI, AMD GPU
11: AMD SB-TSI, MxM GPU

EC ,Index 9E[3]: DTS Multi-Scan enable
0: Disable
1:Enable

EC ,Index B8: Second SMBus Address Register

EC ,Index B9: Second SMBus Command Register

CONFIDENTIAL

9.8 BREATH LED

In S3, no POWER GOOD, LED_G will enter the breath led mode to control the LED light. In this mode, LED_G generates a modulation signal with its duty cycle gradually increasing or decreasing depending on the setting of BREATH LED control registers.

The breath LED mode should be used with 30K clock input. Users should decide LED's behavior first by setting the breath LED control registers before this mode is started; otherwise the breath LED will show unpredicatable behavior.
Figure 9-25.shows the behavior of the breath LED duty cycle controlled by the related breath LED control registers.

Figure 9-25. Breath LED Mode Waveform

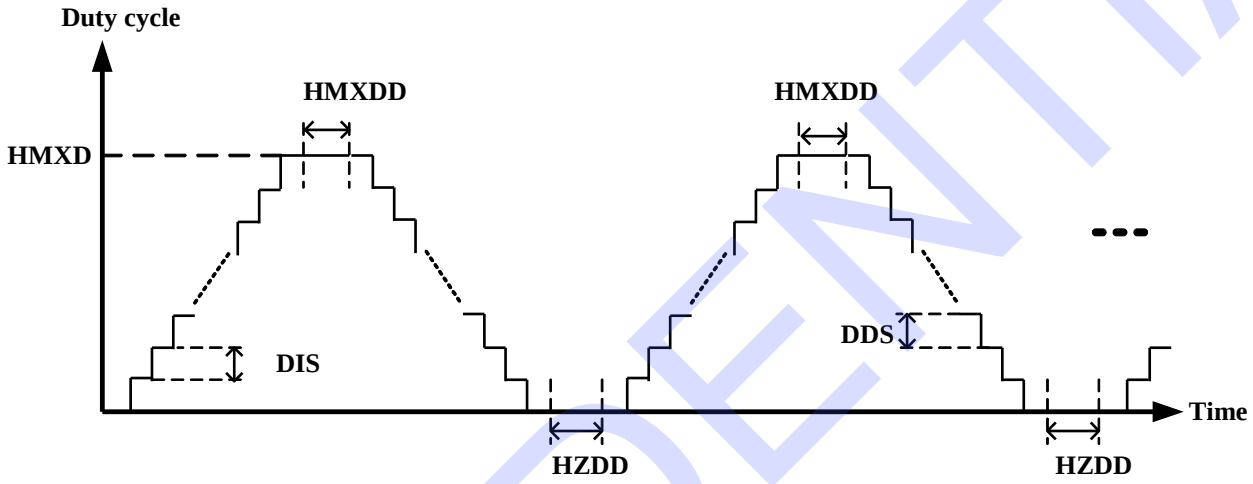

As the waveform illustrated above, the duty cycle increases or decreases step by step with each cyclein the breath LED mode. The increasing or decreasing track is linear and can be decided individually by DIS and DDS.The maximum duty cycle can be selected by HMXD. When the duty cycle increases to the maximum value, the breath LED can remain the maximum duty cycle for a priod of time, which is decided by HMXDD. On the contrary,the breath LED can remain the zero duty cycle for a priod of time, which is decided by HZDD.

CONFIDENTIAL

9.9 HP's Coolsense

Reserved

CONFIDENTIAL

9.10 Serial Port (UART)

The IT8625E incorporates two enhanced serial ports that perform serial to parallel conversion on received data, and parallel to serial conversion on transmitted data. Each of the serial channels individually contains a programmable baud rate generator which is capable of dividing the input clock by a number ranging from 1 to 65535. The data rate of each serial port can be programmed from 115.2K baud down to 50 baud as well. The character options are programmable for 1 start bit; 1, 1.5 or 2 stop bits; even, odd, stick or no parity; and privileged interrupts.

Table 9-17. Serial Channel Registers

Register	DLAB*	Address	READ	WRITE
Data	0	Base + 0h	RBR (Receiver Buffer Register)	TBR (Transmitter Buffer Register)
Control	0	Base + 1h	IER (Interrupt Enable Register)	IER
	x	Base + 2h	IIR (Interrupt Identification Register)	FCR (FIFO Control Register)
	x	Base + 3h	LCR (Line Control Register)	LCR
	x	Base + 4h	MCR (Modem Control Register)	MCR
	1	Base + 0h	DLL (Divisor Latch LSB)	DLL
	1	Base + 1h	DLM (Divisor Latch MSB)	DLM
Status	x	Base + 5h	LSR (Line Status Register)	LSR
	x	Base + 6h	MSR (Modem Status Register)	MSR
	x	Base + 7h	SCR (Scratch Pad Register)	SCR

* DLAB is bit 7 of the Line Control Register.

9.10.1 Data Register

The TBR and RBR individually hold five to eight data bits. If the transmitted data are less than eight bits, it aligns to the LSB. Either received or transmitted data are buffered by a shift register, and are latched first by a holding register. Bit 0 of any word is first received and transmitted.

9.10.1.1 Receiver Buffer Register (RBR) (Read only, Address offset=0, DLAB=0)

This register receives and holds the incoming data. It contains a non-accessible shift register which converts the incoming serial data stream into a parallel 8-bit word.

9.10.1.2 Transmitter Buffer Register (TBR) (Write only, Address offset=0, DLAB=0)

This register holds and transmits the data via a non-accessible shift register, and converts the outgoing parallel data into a serial stream before data transmission.

CONFIDENTIAL

9.10.2 Control Register

9.10.2.1 Interrupt Enable Register (IER) (Read/Write, Address offset=1, DLAB=0)

The IER is to enable or disable four active high interrupts which activate the interrupt outputs with its lower four bits: IER(0), IER(1), IER(2), and IER(3).

Bit	Default	Description
7-4	-	**Reserved**
3	0	**Enable Modem Status Interrupt** Set this bit high to enable the modem status interrupt when one of the modem status registers changes its bit status.
2	0	**Enable Receiver Line Status Interrupt** Set this bit high to enable the receiver line status interrupt, which happens when overrun, parity, framing or break occurs.
1	0	**Enable Transmitter Holding Register Empty Interrupt** Set this bit high to enable the transmitter holding register empty interrupt.
0	0	**Enable Received Data Available Interrupt** Set this bit high to enable the received data available interrupt and time-out interrupt in the FIFO mode.

9.10.2.2 **Interru**pt **Identification** Register (IIR) (Read only, Address offset=2)

This register facilitates the host CPU to determine the interrupt priority and its source. The four existing interruptsare listed below in priority order.

1. Receiver Line Status (highest priority)
2. Received Data Ready
3. Transmitter Holding Register Empty
4. Modem Status (lowest priority)

When a privileged interrupt is pending and the interrupt type is stored in the IIR which is accessed by the host, the serial channel holds back all interrupts and indicates the pending interrupts with the highest priority to the host. Any new interrupts will not be acknowledged until the host access is completed. Please refer to the following table for the detail.

CONFIDENTIAL

Table 9-18. Interrupt Identification Register

FIFO Mode	Interrupt Identification Register			Interrupt Set and Reset Function			
Bit 3	Bit 2	Bit 1	Bit 0	Priority	Interrupt Type	Interrupt Source	Interrupt Reset Control
0	X	X	1	-	None	None	-
0	1	1	0	First	Receiver Line Status	OE, PE, FE, or BI	Read LSR
0	1	0	0	Second	Received Data Available	Received Data Available	Read RBR or FIFO drops below the trigger level
1	1	0	0	Second	Character Time-out Indication	No characters have been removed from or input to the RCVR FIFO during the last four character times and there is at least one character in it during this period.	Read RBR
0	0	1	0	Third	Transmitter Holding Register Empty	Transmitter Holding Register Empty	Read IIR if THRE is the Interrupt Source Write THR
0	0	0	0	Fourth	Modem Status	CTS#, DSR#, RI#, DCD#	Read MSR

Note: X = Not Defined

IIR(7), IIR(6): Set when FCR(0) = 1.
IIR(5), IIR(4): Always logic 0.
IIR(3): In the non-FIFO mode, this bit is a logic 0. In the FIFO mode, this bit is set along with bit 2 when a time-out Interrupt is pending.
IIR(2), IIR(1): Used to identify the highest priority interrupt pending.
IR(0): Used to indicate a pending interrupt in either a hard-wired prioritized or polled environment with a logic 0 state. In such a case, IIR contents may be used as a pointer that points to the appropriate interrupt service routine.

CONFIDENTIAL

9.10.2.3 FIFO Control Register (FCR) (Write Only, Address offset=2)

This register is used to not only enable and clear the FIFO but also set the RCVR FIFO trigger level.

Bit	Default	Description
7-6	-	**Receiver Trigger Level Selection** These bits are to set the trigger level for the RCVR FIFO interrupt.
5-4	0	**Reserved**
3	0	This bit does not affect Serial Channel operation. RXRDY and TXRDY functions are not available on this chip.
2	0	**Transmitter FIFO Reset** This self-clearedbit clears all contents of the XMIT FIFO and resets its related counter to 0 via a logic "1".
1	0	**Receiver FIFO Reset** Setting this self-cleared bit to a logic "1" will clear all contents of the RCVR FIFO and resets its related counter to "0" (except the shift register).
0	0	**FIFO Enable** XMIT and RCVR FIFOs are enabled when this bit is set high. XMIT whereas disabled and cleared respectively when this bit is cleared to low. This bit must be a logic "1"if data are written to the other bits of the FCR, or they will not be properly programmed. When this register is switched to the non-FIFO mode, all of its contents will be cleared.

Table 9-19. Receiver FIFO Trigger Level Encoding

FCR (7)	FCR (6)	RCVR FIFO Trigger Level
0	0	1 byte
0	1	4 bytes
1	0	8 bytes
1	1	14 bytes

9.10.2.4 Divisor Latches (DLL, DLM) (Read/Write, Address offset=0,1 DLAB=0)

Two 8-bit Divisor Latches (DLL and DLM) store the divisor values in a 16-bit binary format. They are loaded during initialization to generate a desired baud rate.

9.10.2.5 Baud Rate Generator (BRG)

Each serial channel contains a programmable BRG, which can take any clock input (from DC to 8 MHz) to generate standard ANSI/CCITT bit rates for the channel clocking with an external clock oscillator. The number of DLL or DLM is in 16-bit format, providing the divisor ranging from 1 to 2^{16} to obtain the desired baud rate. The output frequency is 16X data rate.

CONFIDENTIAL

Table 9-20. Baud Rate Using (24 MHz ÷ 13) Clock

Desired Baud Rate	Divisor Used
50	2304
75	1536
110	1047
134.5	857
150	768
300	384
600	192
1200	96
1800	64
2000	58
2400	48
3600	32
4800	24
7200	16
9600	12
19200	6
38400	3
57600	2
115200	1

CONFIDENTIAL

9.10.2.6 Scratch Pad Register (Read/Write, Address offset=7)

This 8-bit register does not control the UART operation in any way. It is intended as a scratch pad register to be used by programmers to temporarily hold general purpose data.

9.10.2.7 Line Control Register (LCR) (Read/Write, Address offset=3)

LCR controls the format of the data character and supplies the information of the serial line.

Bit	Default	Description
7	0	**Divisor Latch Access Bit (DLAB)** This bit must be set high to access the Divisor Latches of the baud rate generator during READ or WRITE operation whereas set low to accessData Register (refer to page 162) or Interrupt Identification Register (IIR) (Read only, Address offset=2)(refer to page 163).
6	0	**Set Break** This bitforces the Serial Output (SOUT) to the spacing state (logic 0) by a logic 1, which will be preserved until a low level resetting LCR(6), enabling the serial port to alert the terminal in a communication system.
5	0	**Stick Parity** When this bit and LCR(3) are high at the same time, the parity bit is transmitted and then detected by a receiver in an opposite state by LCR(4) to force the parity bit into a known state and to check the parity bit in a known state.
4	0	**Even Parity Selection** When the parity is enabled (LCR(3) = 1), 0:Odd parity 1:Even parity
3	0	**Parity Enable** A parity bit, located between the last data word bit and stop bit, will be generated or checked (transmit or receive data) when LCR(3) is high.
2	0	**Number of Stop Bit** This bit specifies the number of stop bits in each serial character, as summarized in Table 9-21. Stop Bit Number Encoding.
1-0	00	**Word Length Select [1:0]** 11: 8 bits 10: 7 bits 01: 6 bits 00: 5 bits

Table 9-21. Stop Bit Number Encoding

LCR (2)	Word Length	No. of Stop Bit
0	-	1
1	5 bits	1.5
1	6 bits	2
1	7 bits	2
1	8 bits	2

Note: The receiver will ignore all stop bits beyond the first, regardless of the number used in transmission.

CONFIDENTIAL

9.10.2.8 Modem Control Register (MCR) (Read/Write, Address offset=4)

This register controls the interface by the modem or data set (or device emulating a modem).

Bit	Default	Description
7-5	-	**Reserved**
4	0	**Internal Loopback** This bit provides a loopback feature for diagnostic test of the serial channel when set high. Serial Output (SOUT) is set to the Marking State Shift Register output loops back into the Receiver Shift Register. All Modem Control inputs (CTS#, DSR#, RI# and DCD#) are disconnected. The four Modem Control outputs (DTR#, RTS#, OUT1 and OUT2) are internally connected to the four Modem Control inputs and forced to inactive high then the transmitted data are immediately received, allowing the processor to verify the transmitted and received data path of the serial channel.
3	0	**OUT2** The Output 2 bit enables the serial port interrupt output by a logic 1.
2	0	**OUT1** This bit does not have an output pin and can only be read or written by CPU.
1	0	**Request to Send (RTS)** This bit controls the Request to Send (RTS#), which is in an inverse logic state with that of MCR(1).
0	0	**Data Terminal Ready (DTR)** This bit controls the Data Terminal Ready (DTR#), which is in an inverse logic state with that of the MCR(0).

CONFIDENTIAL

9.10.3 Status Registers

9.10.3.1 Line Status Register (LSR) (Read/Write, Address offset=5)

This register provides the status indication and is usually the first register read by the CPU to determine the cause of an interrupt or to poll the status of each serial channel. The contents of the LSR are described below:

Bit	Default	Description
7	0	**Error in Receiver FIFO** In the 16450 mode, this bit is always 0. In the FIFO mode, it is set high when there is at least one parity error, framing or break interrupt in the FIFO. This bit is cleared when the CPU reads the LSR if there are no subsequent errors in the FIFO.
6	1	**Transmitter Empty** This **read only** bit indicates that the Transmitter Holding Register and Transmitter Shift Register are both empty. Otherwise, this bit is "0" and has the same function as that in the FIFO mode.
5	1	**Transmitter Holding Register Empty(THRE)** This **read only** bit indicates that the TBR is empty and is ready to accept a new character for transmission. It is set high when a character is transferred from the THR into the Transmitter Shift Register, causing a priority 3 IIR interrupt which is cleared by a read of IIR. In the FIFO mode, it is set when the XMIT FIFO is empty, and is cleared when at least one byte is written to the XMIT FIFO.
4	0	**Line Break** The Line Break(LB) Interrupt status bit indicates that the last character received is a break character, which is invalid but complete.It includes parity and stop bits. This situation occurs when the received data input is held in the spacing (logic 0) for longer than a full word transmission time (start bit + data bits + parity + stop bit). When any of these error conditions is detected (LSR(1) to LSR(4)), a Receiver Line Status interrupt (priority 1) will be generated in IIR, with bit 2 of Interrupt Enable Register (IER) (Read/Write, Address offset=1, DLAB=0)previously enabled(refer to page 163).
3	0	**Framing Error(FE)** A logic 1 indicates that the stop bit in the received character is not valid. It will be reset low when CPU reads the contents of the LSR.
2	0	**Parity Error(PE)** A logic 1 indicates that the received data character does not have the correct even or odd parity, as selected by LCR(4). It will be reset to "0" whenever LSR is read by CPU.
1	0	**Overrun Error (OE)** A logic 1 indicates that the RBR has been overwritten by the next character before it had been read by the CPU. In the FIFO mode, OE occurs when FIFO is full and the next character has been completely received by the Shift Register. It will be reset when LSR is read by the CPU.
0	0	**Data Ready** A logic 1 indicates a character has been received by RBR. A logic 0 indicates all the data in RBR or RCVR FIFO have been read.

CONFIDENTIAL

9.10.3.2 ModemStatus Register (MSR) (Read/Write, Address offset=6)

This 8-bit register indicates the current state of the control lines with modems or the peripheral devices in addition to this current state information. Four of these eight bits,MSR(4) - MSR(7), can provide the state change information when the modem control input changes the state. It is reset low when the host reads the MSR.

Bit	Default	Description
7	0	**Data Carrier Detect(DCD)** This bit indicates the complement status of Data Carrier Detect (DCD#) input. If MCR(4) = 1, MSR(7) is equivalent to OUT2 of the MCR.
6	0	**Ring Indicator(RI)** This bit indicates the complement status to the RI# input. If MCR(4)=1, MSR(6) is equivalent to OUT1 in the MCR.
5	0	**Data Set Ready(DSR)** This bit indicates that the modem is ready to provide received data to the serial channel receiver circuitry. If the serial channel is in the loop mode (MCR(4) = 1), MSR(5) is equivalent to DTR# of MCR.
4	0	**Clear to Send(CTS)** This bit indicates the complement of CTS# input. When the serial channel is in the Loop mode (MCR(4)=1), MSR(5) is equivalent to RTS# of MCR.
3	0	**Delta Data Carrier Detect(DDCD)** This bit indicates that the DCD# input state has been changed since being read by the hostlast time.
2	0	**Trailing Edge Ring Indicator(TERI)** This bit indicates that the RI input state to the serial channel has been changed from low to high since being read by the hostlast time. The change ina logic “1” does not activate the TERI.
1	0	**Delta Data Set Ready(DDSR)** A logic "1" indicates that the DSR# input state to the serial channel has been changed since being read by the hostlast time.
0	0	**Delta Clear to Send(DCTS)** This bit indicates the CTS# input to the chip has changed the state since MSR was read last time.

CONFIDENTIAL

9.10.4 Reset

The reset of the IT8625E should be held to an idle mode reset high for 500 ns until initialization, which causes the initialization of the internal clock counters of transmitter and receiver.

Table 9-22. Reset Control of Register and Pinout Signal

Register/Signal	Reset Control	Reset Status
Interrupt Enable Register	Reset	All bits Low
Interrupt Identification Register	Reset	Bit 0 is high and bits 1-7 are low
FIFO Control Register	Reset	All bits Low
Line Control Register	Reset	All bits Low
Modem Control Register	Reset	All bits Low
Line Status Register	Reset	Bits 5 and 6 are high, others are low
Modem Status Register	Reset	
SOUT1, SOUT2	Reset	Bits 0-3 low, bits 4-7 input signals
RTS1#, RTS2#, DTR1#, DTR2#	Reset	High
IRQ of Serial Port	Reset	High
		High Impedance

9.10.5 Programming

Each serial channel of the IT8625E is programmed by control registers, whose contents define the character length, number of stop bits, parity, baud rate and modem interface. Even though these control registers can be written in any given order, IER should be the last register written because it controls whether the interrupt is enabled or not. After the port is programmed, these registers still can be updated whenever the port does not transfer data.

9.10.6 Software Reset

This approach allows the serial portto return to a completely known state without a system reset. Itis achieved by writing the required data to LCR, DLL, DLM and MCR. LSR and RBR must be read before interrupts are enabled to clear out any residual data or status bits that may be invalid for subsequent operations.

9.10.7 Clock Input Operation

The input frequency of the Serial Channel is 24 MHz ÷ 13, not exactly 1.8432 MHz.

9.10.8 FIFO Interrupt Mode Operation

(1) RCVR Interrupt

By setting bit 0 of FIFO Control Register (FCR) (Write Only, Address offset=2) (refer to page 165) and bit 0 of Interrupt Enable Register (IER) (Read/Write, Address offset=1, DLAB=0) (refer to page 163) high, the RCVR FIFO and receiver interrupts are enabled. The RCVR interrupt occurs under the following conditions:

The receive data available interrupt will be issued only when the FIFO has reached its programmed trigger level and cleared as soon as the FIFO drops below its trigger level.

The receiver line status interrupt has higher priority over the received data available interrupt.

The time-out timer will be reset after receiving a new character or after the host reads RCVR FIFO whenever a time-out interrupt occurs. The timer will be reset when the host reads one character from RCVR FIFO.

CONFIDENTIAL

For the RCVR FIFO time-out interrupt,it will occur under the following conditions by enabling the RCVR FIFO and receiver interrupts:

The RCVR FIFO time-out interrupt will occur only if there is at least one character in FIFO whenever the interval between the most recently received serial character and the most recent Host READ from the FIFO is longer than four consecutive character times.

The time-out timer will be reset after receiving a new character or after the host reads RCVR FIFO whenever a time-out interrupt occurs. The timer will be reset when the host reads one character from RCVR FIFO.

(2) XMIT Interrupt

By setting bit 0 of FIFO Control Register (FCR) (Write Only, Address offset=2) (refer to page 165) and bit 1 of Interrupt Enable Register (IER) (Read/Write, Address offset=1, DLAB=0) (refer to page 163) high, the XMIT FIFO and transmitter interrupts are enabled. The XMIT interrupt occurs under the following conditions:

a. The transmitter interrupt occurs when the XMIT FIFO is empty, and it will be reset if the THR is written or the IIR is read.

b. The transmitter FIFO empty indications will be delayed for one character time minus the last stop bit time whenever the following condition occurs:

   THRE = 1 and there have not been at least two bytes in the transmitter FIFO at the same time since the last THRE = 1. The transmitter interrupt after changing FCR(0) will be immediate if it is enabled. Once the first transmitter interrupt is enabled, the THRE indication will be delayed for one character time minus the last stop bit time.

The character time-out and RCVR FIFO trigger level interrupts have the same priority as the received data available interrupt. The XMIT FIFO empty has the same priority as the transmitter holding register empty interrupt.

FIFO Polled Mode Operation [FCR(0)=1, and IER(0), IER(1), IER(2), IER(3) or all are 0].

Either or both XMIT and RCVR can be in this operation mode. The operation mode can be programmed by users and is responsible for checking the RCVR and XMIT status via LSR described below:

LSR(7): RCVR FIFO error indication
LSR(6): XMIT FIFO and Shift register empty
LSR(5): The XMIT FIFO empty indication
LSR(4) - LSR(1): Specify that errors have occurred. The character error status is handled in the same way as that in the interrupt mode. The IIR is not affected since IER(2)=0.
LSR(0): High whenever RCVR FIFO contains at least one byte.
No trigger level is reached or time-out condition indicated in FIFO Polled Mode.

CONFIDENTIAL

9.11 Parallel Port

The IT8625E incorporates one multi-mode high performance parallel port, which supports the IBM AT, PS/2 compatible bi-directional Standard Parallel Port (SPP), the Enhanced Parallel Port (EPP) and the Extended Capabilities Port (ECP). For enabling/disabling, changing the base address of the parallel port, and operation mode selection,please refer to section 8.6configuration registerson page 62for the detail.

Table 9-23. Parallel Port Connector in Different Modes

Host Connector	SPP	EPP	ECP
1	STB#	WRITE#	NStrobe
2-9	PD0 - 7	PD0 - 7	PD0 - 7
10	ACK#	INTR	nAck
11	BUSY	WAIT#	Busy PeriphAck(2)
12	PE	(NU) (1)	PError nAckReverse(2)
13	SLCT	(NU) (1)	Select
14	AFD#	DSTB#	nAutoFd HostAck(2)
15	ERR#	(NU) (1)	nFault nPeriphRequest(2)
16	INIT#	(NU) (1)	nInit nReverseRequest(2)
17	SLIN#	ASTB#	nSelectIn

Note1: NU: Not used
Note 2: Fast mode
Note 3: For more information, please refer to the IEEE 1284 standard.

9.11.1 SPP and EPP Mode

Table 9-24. Address Map and Bit Map for SPP and EPP Mode

Register	Address	I/O	D0	D1	D2	D3	D4	D5	D6	D7	Mode
Data Port	Base 1+0h	R/W	PD0	PD1	PD2	PD3	PD4	PD5	PD6	PD7	SPP/EPP
Status Port	Base 1+1h	R	TMOUT	1	1	ERR#	SLCT	PE	ACK#	BUSY#	SPP/EPP
Control Port	Base 1+2h	R/W	STB	AFD	INIT	SLIN	IRQE	PDDIR	1	1	SPP/EPP
EPP Address Port	Base 1+3h	R/W	PD0	PD1	PD2	PD3	PD4	PD5	PD6	PD7	EPP
EPP Data Port0	Base 1+4h	R/W	PD0	PD1	PD2	PD3	PD4	PD5	PD6	PD7	EPP
EPP Data Port1	Base 1+5h	R/W	PD0	PD1	PD2	PD3	PD4	PD5	PD6	PD7	EPP
EPP Data Port2	Base 1+6h	R/W	PD0	PD1	PD2	PD3	PD4	PD5	PD6	PD7	EPP
EPP Data Port3	Base 1+7h	R/W	PD0	PD1	PD2	PD3	PD4	PD5	PD6	PD7	EPP

Note 1: The Base address 1 depends on the Logical Device configuration registers of Parallel Port (0X60, 0X61).

CONFIDENTIAL

9.11.1.1 Data Port Register (Base Address 1 **+ 00h)**

This is a bi-directional 8-bit data port. The direction of data flow is determined by bit 5 of the logic state of Control Port Register (Base Address 1 + 02h), which forwards the direction when the bit is low (0) whereasreverses the direction when the bit is high (1).

9.11.1.2 **Status Port** Register **(Base Address 1 + 01h)**

This is a **read only** register. Writing data to this register has no effects. The contents of this register are latched during an IOR cycle.

Bit 7: BUSY#
Inverse of printer BUSY signal; a logic "0" means that the printer is busy and cannot accept another character whereasa logic "1" means that it is ready to accept the next character.
Bit 6: ACK#
Printer acknowledge; a logic "0" means that the printer has received a character and is ready to accept another whereas a logic "1" means that it is still processing the last character.
Bit 5: PE
Paper end; a logic "1" indicates the paper end.
Bit 4: SLCT
Printer selected;a logic "1" means that the printer is on line.
Bit 3: ERR#
Printer error signal; a logic "0" means an error has been detected.
Bits 2-1: Reserved
These bits are always "1" at read.
Bit 0: TMOUT
This bit is valid only in the EPP mode and indicates that a 10-msec time-out has occurred in EPP operation. A logic "0" means no time-out occurswhereasa logic “1” means that a time-out error has been detected. This bit is cleared by an LRESET# or by writing a logic “1” to it. When the chipis selected asthe non-EPP mode (SPP or ECP), this bit is always a logic "1" at read.

9.11.1.3 **Control Port** Register **(Base Address 1 + 02h)**

This is a **read/write** register and the port provides all output signals to control the printer.
Bit 7-6: Reserved
These two bits are always "1" at read.
Bit 5: PDDIR
Data port direction control. This bit determines the direction of the data port register. Set this bit "0" to output the data port to PD bus whereas "1" to input from PD bus.
Bit 4: IRQE
Interrupt request enable. Setting this bit "1" enables the interrupt request from the parallel port to the host. An interrupt request is generated by a "0" to "1" transition of the ACK# signal.
Bit 3: SLIN
Inverse of SLIN# pin;setting this bit to "1" selects the printer.
Bit 2: INIT
Initiate printer;setting this bit to "0" initializes the printer.
Bit 1: AFD
Inverse of the AFD# pin;setting this bit to "1" causes the printer to automatically advance one line after each line is printed.
Bit 0: STB
Inverse of the STB# pin;this pin controls the data strobe signal to the printer.

CONFIDENTIAL

9.11.1.4 EPP Address Port Register (Base Address 1 + 03h)

The EPP Address Port is only available in the EPP mode. When the host writes data to this port, the contents of D0 -D7 are buffered and output to PD0 - PD7. The leading edge of IOW (Internal signal, active when LPC I/O WRITE cycle is at this address) causes an EPP ADDRESS WRITE cycle. When the host reads data from this port, the contents of PD0 - PD7 are read. The leading edge of IOR (Internal signal, active when LPC I/O READ cycle is at this address) causes an EPP ADDRESS READ cycle.

9.11.1.5 EPP Data Port 0-3 Register (Base Address 1 + 04-07h)

The EPP Data Ports are only available in the EPP mode. When the host writes data to these ports, the contents of D0 - D7 are buffered and output to PD0 - PD7. The leading edge of IOW (Internal signal, active when LPC I/O WRITE cycle is at this address) causes an EPP DATA WRITE cycle. When the host reads data from these ports, the contents of PD0 - PD7 are read. The leading edge of IOR (Internal signal, active when LPC I/O READ cycle is at this address) causes an EPP DATA READ cycle.

9.11.2 EPP Mode Operation

When the parallel port of the IT8625E is set in the EPP mode, the SPP mode is also available. If no EPP Address/Data Port address is decoded (Base address + 03h- 07h), the PD bus is in the SPP mode, and the output signals such as STB#, AFD#, INIT#, and SLIN# are set by Control Port Register (Base Address 1 + 02h) (refer to page 174). The direction of the data port is controlled by bit 5 of Control Port Register (Base Address 1 + 02h). There is a 10-msec time required to prevent the system from lockup. The time has elapsed from the beginning of the IOCHRDY (Internal signal: When active, the IT8625E will issue Long Wait in SYNC field) high (EPP READ/WRITE cycle) to WAIT# being de-asserted. If a time-out occurs, the current EPP READ/WRITE cycle will be aborted and a logic "1" will be read from bit 0 of Status Port Register (Base Address 1 + 01h) (refer to page 174). The host must write 0 to bit 0, 1, 3 of Control Port Register (Base Address 1 + 02h) before any EPP READ/WRITE cycle (EPP spec.). Pin STB#, AFD# and SLIN# are controlled by hardware for the hardware handshaking during EPP READ/WRITE cycle.

9.11.2.1 EPP ADDRESS WRITE

1. The host writes a byte to the EPP Address Port (Base address + 03h). The chip drives D0 - D7 onto PD0 - PD7.
2. The chip asserts WRITE# (STB#) and ASTB# (SLIN#) after IOW becomes active.
3. The peripheral de-asserts WAIT#, indicating that the chip may begin the termination of this cycle. Then, the chip de-asserts ASTB#, latches the address from D0 - D7 to PD bus, allowing the host to complete the I/O WRITE cycle.
4. The peripheral asserts WAIT#, indicating that it acknowledges the termination of the cycle. Then, the chip de-asserts WRITE to terminate the cycle.

9.11.2.2 EPP ADDRESS READ

1. The host reads a byte from the EPP Address Port. The chip drives PD bus to tri-state for the peripheral to drive.
2. The chip asserts ASTB# after IOR becomes active.
3. The peripheral drives the PD bus valid and de-asserts WAIT#, indicating that the chip may begin the termination of this cycle. Then, the chip de-asserts ASTB#, latches the address from PD bus to D0 -D7, allowing the host to complete the I/O READ cycle.
4. The peripheral drives the PD bus to tri-state and then asserts WAIT#, indicating that it acknowledges the termination of the cycle.

CONFIDENTIAL

9.11.2.3 EPP DATA WRITE

1. The host writes a byte to the EPP Data Port (Base address +04h - 07h). The chip drives D0- D7 onto PD0 -PD7.
2. The chip asserts WRITE# (STB#) and DSTB# (AFD#) after IOW becomes active.
3. The peripheral de-asserts WAIT#, indicating that the chip may begin the termination of this cycle. Then, the chip de-asserts DSTB#, latches the data from D0 - D7 to the PD bus, allowing the host to complete the I/O WRITE cycle.
4. The peripheral asserts WAIT#, indicating that it acknowledges the termination of the cycle. Then, the chip de-asserts WRITE to terminate the cycle.

9.11.2.4 EPP DATA READ

1. The host reads a byte from the EPP DATA Port (Base address +04h - 07h). The chip drives PD bus to tri-state for the peripheral to drive.
2. The chip asserts DSTB# after IOR becomes active.
3. The peripheral drives PD bus valid and de-asserts WAIT#, indicating that the chip may begin the termination of this cycle. Then, the chip de-asserts DSTB#, latches the data from PD bus to D0 - D7, allowing the host to complete the I/O READ cycle.
4. The peripheral tri-states the PD bus and then asserts WAIT#, indicating that it acknowledges the termination of the cycle.

9.11.3 ECP Mode Operation

This mode is both software and hardware compatible with the existing parallel ports, allowing ECP to be used as a standard LPT port when the ECP mode is not required. It provides an automatic high-burst-bandwidth channel that supports the DMA or ECP mode in both forward and reverse directions. A 16-byte FIFO is implemented in both forward and reverse directions to smooth data flow and enhance the maximum bandwidth requirement allowed. The port supports automatic handshaking for the standard parallel port to improve compatibility and expedite the mode transfer. It also supports hardwarerun-length encoded (RLE)decompression. Compression is accomplished by counting identical bytes and transmitting an RLE byte that indicates how many times a byte has been repeated. The IT8625E does not support hardware RLE compression. For the detailed description, please refer to "Extended Capabilities Port Protocol and ISA Interface Standard".

Table 9-25. Bit Map of ECP Register

Register	D7	D6	D5	D4	D3	D2	D1	D0
data	PD7	PD6	PD5	PD4	PD3	PD2	PD1	PD0
ecpAFifo	Addr/RLE	Address or RLE field						
dsr	nBusy	nAck	PError	Select	nFault	1	1	1
dcr	1	1	PDDIR	IRQE	SelectIn	nInit	AutoFd	Strobe
cFifo	Parallel Port Data FIFO							
ecpDFifo	ECP Data FIFO							
tFifo	Test FIFO							
cnfgA	0	0	0	1	0	0	0	0
cnfgB	0	intrValue	0	0	0	0	0	0
ecr	mode			nErrIntrEn	dmaEn	ServiceIntr	full	empty

CONFIDENTIAL

9.11.3.1 ECP Register Definition

Name	Address	I/O	ECP Mode	Function
data	Base 1 +000h	R/W	000-001	Data Register
ecpAFifo	Base 1 +000h	R/W	011	ECP FIFO (Address)
dsr	Base 1 +001h	R/W	All	Status Register
dcr	Base 1 +002h	R/W	All	Control Register
cFifo	Base 2 +000h	R/W	010	Parallel Port Data FIFO
ecpDFifo	Base 2 +000h	R/W	011	ECP FIFO (DATA)
tFifo	Base 2 +000h	R/W	110	Test FIFO
cnfgA	Base 2 +000h	R	111	Configuration Register A
cnfgB	Base 2 +001h	R	111	Configuration Register B
ecr	Base 2 +002h	R/W	All	Extended Control Register

Note 1: Base address 1 depends on Parallel Port Primary Base Address MSB Register (Index=60h, Default=03h) and Parallel Port Primary Base Address LSB Register (Index=61h, Default=78h)(refer to page 62 and 62).

Note 2: Base address 2 depends on the Parallel Port Secondary Base Address MSB Register (Index=62h, Default=07h) and Parallel Port Secondary Base Address LSB Register (Index=63h, Default=78h) (refer to page 62 and 62).

9.11.3.2 ECP Mode Description

Mode	Description
000	Standard Parallel Port Mode
001	PS/2 Parallel Port Mode
010	Parallel Port FIFO Mode
011	ECP Parallel Port Mode
110	Test Mode
111	Configuration Mode

Note: For the mode selection, please refer to ECP Register Definition on page 177 for the detail.

CONFIDENTIAL

9.11.3.3 ECP Pin Description

Name	Attribute	Description
nStrobe (HostClk)	O	Used for handshaking with Busy to write data and addresses into the peripheral device
PD0-PD7	I/O	Address or data or RLE data
nAck (PeriphClk)	I	Used for handshaking with nAutoFd to transfer data from the peripheral device to the host
Busy (PeriphACK)	I	The peripheral uses this signal for flow control in the forward direction (handshaking with nStrobe) whereas for determining whether a command or data information is present on PD0-PD7 in the reverse direction.
Perror (nAckReverse)	I	Used to acknowledge nInit from the peripheral which drives this signal low, allowing the host to drive the PD bus
Select	I	Printer On-Line Indication
nAutoFd (HostAck)	O	This signal is used for handshaking between the nAck and the host in the reverse direction. A peripheral data byte is requestedwhen it is asserted. This signalis to determine whether a command or data information is present on PD0-PD7 in the forward direction.
nFault (nPeriphRequest)	I	Forthe forward direction (only), the peripheral is allowed (but not required) to assert this signal (low) to request a reverse transfer while enteringthe ECP mode. The signal provides a mechanism for peer-to-peer communication. It is typically used to generate an interrupt to thehost, which has the ultimate control over the transfer direction.
nInit (nReverseRequest)	O	The host may drive this signal low to makethe PD bus in the reverse direction. The peripheral is permitted to drive the PD bus when nInit is low and nSelectIn high in the ECP mode.
NSelectIn (1284 Active)	O	Always inactive (high) in the ECP mode.

9.11.3.4 Data Port (Base 1+00h, Modes 000 and 001)

Its contents will be cleared by a reset. The contents of the LPC data fields are latched by the Data Register then sent without being inverted to PD0-PD7in **write** operation whereas the contents of data ports are read and sent to the host in **read** operation.

9.11.3.5 ecpAFifo Port (Address/RLE) (Base 1 +00h, Mode 011)

Any data bytes written to this port are placed in FIFO and tagged as an ECP Address/RLE. The hardware then automatically sends these data to the peripheral. Operation of this port is valid only in the forward direction (dcr(5)=0).

9.11.3.6 Device Status Register (dsr) (Base 1 +01h, Mode All)

Bit 2-0 of this register are not implemented. The states of these bits remain high in **read** operation of the Printer Status Register.

dsr(7): This bit is the inverted level of the Busy input.
dsr(6): This bit is the state of the nAck input.
dsr(5): This bit is the state of the PError input.
dsr(4): This bit is the state of the Select input.
dsr(3): This bit is the state of the nFault input.
dsr(2)-dsr(0): These bits are always 1.

CONFIDENTIAL

9.11.3.7 Device Control Register (dcr) (Base 1+02h, Mode All)

There is no function porivided by bit 7-6 of this register, which are r**ead only** and set high in**read** operation. Contents of bit 5-0 are initialized to 0 when the RESET pin is active.

dcr(7)-dcr(6): These two bits are always high.
dcr(5): Except in mode 000 and 010, setting this bit low means that the PD bus is in output operation whereas setting it high means that it is in input operation. This bit will be forced to low in mode 000.
dcr(4): Setting this bit high enables the interrupt request from peripheral to the host due to a rising edge of the nAck input.
dcr(3): This bitis inverted and output to SelectIn.
dcr(2): This bit is output to nInit without inversion.
dcr(1): This bit is inverted and output to nAutoFd.
dcr(0): This bit is inverted and output to nStrobe.

9.11.3.8 Parallel Port Data FIFO (cFifo) (Base 2+00h, Mode 010)

Bytes written or DMA transferred from the host to this FIFO are sent by a hardware handshaking to the peripheral according to the Standard Parallel Port protocol. This operation is only defined for the forward direction.

9.11.3.9 ECP Data FIFO (ecpDFifo) (Base 2+00h, Mode 011)

When the direction bit dcr(5) is 0, bytes written or DMA transferred from the host to this FIFO are sent by hardware handshaking to the peripheral according to the ECP parallel port protocol. When dcr(5) is 1, data bytes from the peripheral to this FIFO are read in an automatic hardware handshaking. The host can receive these bytes by performing **read** operations or DMA transfer from this FIFO.

9.11.3.10 Test FIFO (tFifo) (Base 2+00h, Mode 110)

The host may operate READ/WRITE or DMA transfer to this FIFO in any directions. Data in this FIFO will be displayed on the PD bus without using hardware protocol handshaking. The tFifo will not accept new data after it is full. Operating READ from an empty tFifo causes the last data byte to return.

9.11.3.11 Configuration Register A (cnfgA) (Base 2+00h, Mode 111)

This **read only** register indicates to the system that interrupts are ISA-Pulses compatible. This is an 8-bit implementation by returning a 10h.

9.11.3.12 Configuration Register B (cnfgB) (Base 2+01h, Mode 111)

This register is **read only**.

cnfgB(7): A logic “0” read indicates that the chip does not support hardware RLE compression.
cnfgB(6): Reserved.
cnfgB(5)-cnfgB(3): A value 000 read indicates that the interrupt must be selected with jumpers.
cnfgB(2)-cnfgB(0): A value 000 read indicates that the DMA channel is set to8-bit DMA.

CONFIDENTIAL

9.11.3.13 Extended Control Register (ecr) (Base 2+02h, Mode All)

This is an ECP function control register.

ecr(7)-ecr(5): These bits are used for READ/WRITE and mode selection.

Table 9-26. Mode and Description of Extended Control Register (ECR)

ECR	Mode and Description
000	**Standard Parallel Port Mode** The FIFO is reset and the direction bit dcr(5) is always 0 (forward direction) in this mode.
001	**PS/2 Parallel Port Mode** It is similar to the SPP mode, except that the dcr(5) is **read/write**. When dcr(5) is 1, the PD bus is tri-state. Reading the data port returns the value on the PD bus instead of the value of the data register.
010	**Parallel Port Data FIFO Mode** This mode is similar to the 000 mode, except that the host writes or DMA transfers the data bytes to FIFO. The FIFO data are then transmitted to the peripheral using the standard parallel port protocol automatically. This mode is only valid in the forward direction (dcr(5)=0).
011	**ECP Parallel Port Mode** In the forward direction, bytes in the ecpDFifo and ecpAFifo are placed in a single FIFO and automatically transmitted to the peripheral under the ECP protocol. In the reverse direction, bytes are transmitted to the ecpDFifo from the ECP port.
100, 101	**Reserved;undefined**
110	**Test Mode** In this mode, FIFO may be read from or written to, but it cannot be sent to the peripheral.
111	**Configuration Mode** In this mode, the cnfgA and cnfgB registers are accessible at 0x400 and 0x401.

ecr(4): nErrIntrEn, READ/WRITE, Valid in ECP(011) Mode
- 1: Disable the interrupt generated on the asserting edge of the nFault input.
- 0: Enable the interrupt pulse on the asserting edge of the nFault. An interrupt pulse will be generated if nFault is asserted or if this bit is written from 1 to 0 in the low-level nFault.

ecr(3): dmaEn, READ/WRITE
- 1: Enable DMA. DMA is started when serviceIntr (ecr(2)) is 0.
- 0: Disable DMA unconditionally.

ecr(2): ServiceIntr, READ/WRITE
- 1: Disable DMA and all service interrupts.
- 0: Enable the service interrupts. This bit will be set to "1" by hardware when one of the three service interrupts occurs.

Writing "1" to this bit will not generate an interrupt.

Case 1: dmaEn=1
During DMA, this bit will be set to 1 (a service interrupt generated) if the terminal count is reached.

Case 2: dmaEn=0, dcr(5)=0
This bit is set to 1 (a service interrupt generated) whenever there is writeIntrThreshold or more bytes space free in FIFO.

Case 3: dmaEn=0, dcr(5)=1
This bit is set to 1 (a service interrupt generated) whenever there is readIntrThreshold or more valid bytes to be read from FIFO.

ecr(1): full, **read only**
- 1: FIFO is full and cannot accept another byte.
- 0: FIFO has at least one free data byte space.

CONFIDENTIAL

ecr(0): empty, **read only**
1: FIFO is empty.
0: FIFO contains at least one data byte.

9.11.3.14 Mode Switching Operation

In programmed I/O control (mode 000 or 001), P1284 negotiation and all other tasks that happen before data transmission are software-controlled. Setting the mode to 011 or 010 will cause the hardware to perform an automatic control-line handshaking, transferring information between the FIFO and the ECP port.

For mode 000 and 001, they may be immediately switched. To change the direction, the mode must be set to 001 first.

In the extended forward mode, FIFO must be cleared and all the signals must be de-asserted before returning to mode 000 or 001. In the ECP reverse mode, all data must be read from FIFO before returning to mode 000 or 001. Usually, unneeded data are accumulated during ECP reverse handshaking when the mode is changed during a data transfer. In such a condition, nAutoFd will be de-asserted regardless of the transfer state. To avoid bugs during handshaking signals, these guidelines must be followed.

9.11.3.15 Software Operation (ECP)

Before the ECP operation can be started, it is necessary for the host to switch the mode to 000 first in order to negotiate with the parallel port. During this process, the host determines whether the peripheral supports the ECP protocol.

After this negotiation is completed, the mode is set to 011 (ECP). To enable the drivers, the direction must be set to 0. Both strobe and autoFd are set to 0, causing nStrobe and nAutoFd signals to be de-asserted.

All FIFO data transfer is PWord-wide and PWord aligned. Permitted only in the forward direction, Address/RLE transfers are byte-wide. The ECP Address/RLE bytes may be automatically sent by writing to the ecpAFifo. Similarly, data PWords may be automatically sent via the ecpDFifo.

To change the direction, the host has to switch the mode to 001. It then negotiates either the forward or reverse channel, sets the direction to 1 or 0, and finally switches the mode to 001. If the direction is set to 1, the hardware performs the handshaking for each ECP data byte read, and then tries to fill FIFO. At this time, PWords may be read from the ecpDFifo while retaining data. It is also possible to perform the ECP transfer by handshaking with individual bytes under programmed control in mode 001or 000 even though this is a comparatively time-consuming approach.

9.11.3.16 Hardware Operation (DMA)

The Standard PC DMA protocol (through LDRQ#) is followed. As in the programmed I/O case, software sets the direction and state. Next, the desired count and memory addresses are programmed into DMA controller. The dmaEn is set to 1, and the serviceIntr is set to 0. To complete the process, the DMA channel with the DMA controller is unmasked. The contents of FIFO are emptied or filled by DMA using the right mode and direction.

DMA is always transferred to or from FIFO located at 0 x 400. By generating an interrupt and asserting a serviceIntr, DMA is disabled when the DMA controller reaches the terminal count. By not asserting LDRQ# for more than 32 consecutive DMA cycles, blocking of refresh requests is eliminated.

When it is necessary to disable a DMA while performing transfer, the host DMA controller is disabled, serviceIntr is then set to 1, and dmaEn is next set to 0. If the contents in FIFO are empty or full, DMA will start again. This is first done by enabling the host DMA controller, and then setting dmaEn to 1. Finally, serviceIntr is set to 0. Upon completion of a DMA transfer in the forward direction, the software program must wait until the contents in FIFO are empty and the busy line is low, ensuring that all data successfully reach the peripheral device.

CONFIDENTIAL

9.11.3.17 Interrupt

It is necessary to generate an interrupt when any of the following states is reached.

5. serviceIntr = 0, dmaEn = 0, direction = 0, and the number of PWords in the FIFO is greater than or equal to writeIntrThreshold.
6. serviceIntr = 0, dmaEn = 0, direction = 1, and the number of PWords in the FIFO is greater than or equal to readIntrThreshold.
7. serviceIntr = 0, dmaEn = 1, and DMA reaches the terminal count.
8. nErrIntrEn = 0 and nFault goes from high to low or when nErrIntrEn is set from 1 to 0 and nFault is asserted.
9. ackIntEn = 1. In current implementation of using existing parallel ports, the generated interrupt may be either edge or level trigger type.

9.11.3.18 Interrupt-driven Programmed I/O

It is also possible to use an interrupt-driven programmed I/O to execute either ECP or parallel port FIFOs. An interrupt will occur in the forward direction when serviceIntr is 0 and the number of free PWords in the FIFO is equal to or greater than writeIntrThreshold. If either of these conditions is not met, it may be filled with writeIntrThreshold PWords. An interrupt will occur in the reverse direction when serviceIntr is 0 and the number of available PWords in the FIFO is equal to readIntrThreshold. If it is full, the FIFO can be completely emptied in a single burst. If it is not full, only a number of PWords equal to readIntrThreshold may be read from the FIFO in a single burst. In the Test mode, software can determine the values of writeIntrThreshold, readIntrThreshold, and FIFO depth while accessing the FIFO.

For any PC LPC bus implementation adjusted to expedite DMA or I/O transfer, it is necessary to ensure that the bandwidth on ISA is maintained on the interface. Although the LPC (even PCI) bus of PC cannot be directly controlled, the interface bandwidth of ECP port can be constrained to perform at the optimum speed.

9.11.3.19 Standard Parallel Port

In the forward direction with DMA, the standard parallel port is run at or close to the permitted peak bandwidth of 500 KB/sec. The state machine does not examine nAck, but just begins the next DMA based on the Busy signal.

CONFIDENTIAL

9.12 Keyboard Controller (KBC)

The keyboard controller is implemented using an 8-bit microcontroller that is capable of executing the 8042 instruction set. For general information, please refer to the description of the 8042 in the 8-bit controller handbook. In addition, the microcontroller can enter the power-down mode by executing two types of power-down instructions.

Figure 9-26. Keyboard and Mouse Interface

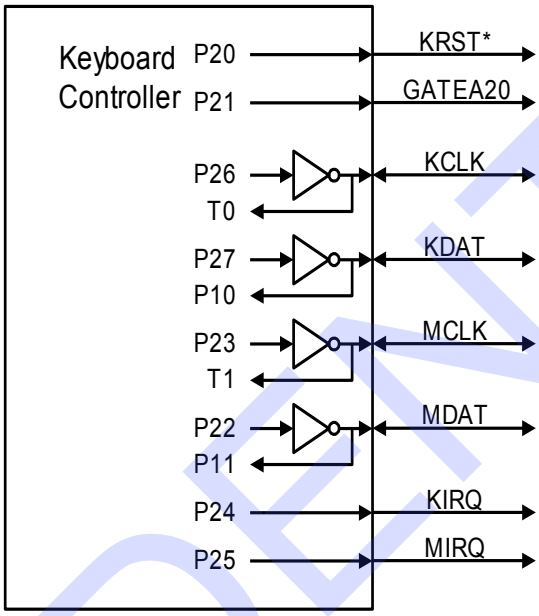

9.12.1 Host Interface

The keyboard controller interfaces with the system through the 8042 style host interface. The following table shows how the interface decodes the control signals.

Table 9-27. Data Register READ/WRITE Controls

Host Address Note	R/W*	Function
60h	R	READ DATA
60h	W	WRITE DATA, (Clear F1)
64h	R	READ Status
64h	W	WRITE Command, (Set F1)

Note: These are the default values of LDN5, 60h and 61h (DATA); LDN5, 62h and 63h (Command). All these registers are programmable.

READ DATA: This is an 8-bit **read only** register. When read, the KIRQ output is cleared and OBF flag in the status register is cleared.
WRITE DATA: This is an 8-bit **write only** register. When written, the F1 flag of the Status register is cleared and the IBF bit is set.
READ Status: This is an 8-bit **read only** register. Refer to the description of the Status register for more information.

WRITE Command: This is an 8-bit **write only** register. When written, both F1 and IBF flags of the Status register are set.

CONFIDENTIAL

9.12.2 Data Registers and Status Register

The keyboard controller provides two data registers, one is DBIN for data input, and the other is DBOUT for data output. Both are 8-bit wide. A write (microcontroller) to the DBOUT will load Keyboard Data Read Buffer, set OBF flag and set the KIRQ output. A read (microcontroller) of DBIN will read the data from the Keyboard Data or Command Write Buffer and clear the IBF flag.

The status register holds information concerning the status of the data registers, the internal flags, and some user-defined status bits. Please refer to Table 9-28. Status Register below. The bit 0 OBF is set to "1" when the microcontroller writes data into DBOUT, and is cleared when the system initiates DATA READ operation. The bit 1 IBF is set to "1" when the system initiates WRITE operation, and is cleared when the microcontroller executes an "IN A, DBB" instruction. The F0 and F1 flags can be set or reset when the microcontroller executes clear and complement flag instructions. F1 also holds the system WRITE information when the system performs WRITE operation.

Table 9-28. Status Register

7	6	5	4	3	2	1	0
ST7	ST6	ST5	ST4	F1	F0	IBF	OBF

9.12.3 Keyboard and Mouse Interface

KCLK is a keyboard clock pin. Its output is the inversion of pin P26 of the microcontroller, and the input of KCLK is connected to the T0 pin of the microcontroller. KDAT is the keyboard data pin; its output is the inversion of pin P27 of the microcontroller, and the input of KDAT is connected to the P10 of the microcontroller. MCLK is the mouse clock pin.Its output is the inversion of pin P23 of the microcontroller, and the input of MCLK is connected to the T1 pin of the microcontroller. MDAT is the Mouse data pin. Its output is the inversion of pin P22 of the microcontroller, and the input of MDAT is connected to the P11 of the microcontroller. KRST# is pin P20 of the microcontroller. GATEA20 is the pin P21 of the microcontroller. These two pins are used as software-controlled or user defined outputs. External pull-ups may be required for these pins.

9.12.4 KIRQ and MIRQ

KIRQ is the interrupt request for the keyboard (Default IRQ1), and MIRQ is the interrupt request for the mouse (Default IRQ12). KIRQ is internally connected to P24 pin of the microcontroller, and MIRQ is internally connected to pin P25 of the microcontroller.

CONFIDENTIAL

9.13 Consumer Remote Control (TV Remote) IR (CIR)

9.13.1 Overview

CIR is used in the consumer remote control equipment, and is a programmable amplitude shift keyed (ASK) serial communication protocol. By adjusting frequencies, baud rate divisors and sensitivity ranges, the CIR registers are able to support the popular protocols such as RC-5, NEC, and RECS-80. Software driver programming can support new protocols.

9.13.2 Features

- Supports 30 kHz -57 kHz (low frequency) or 400 kHz -500 kHz (high frequency) carrier transmission
- Baud rate up to 115200 BPS (high frequency)
- Demodulation optional
- Supports transmission run-length encoding and deferral function
- 32-byte FIFO for data transmission or data reception

9.13.3 Block Diagram

CIR consists of two parts,transmitter and receiver. Regarding the transmitter part, it is responsible for transmitting data to FIFO, processing FIFO data by serialization and modulation and sending out data through the LED device. As for the receiver part, it is responsible for receiving data, processing data by demodulation anddeserialization and storing data in the Receiver FIFO.

Figure 9-27. CIR Block Diagram

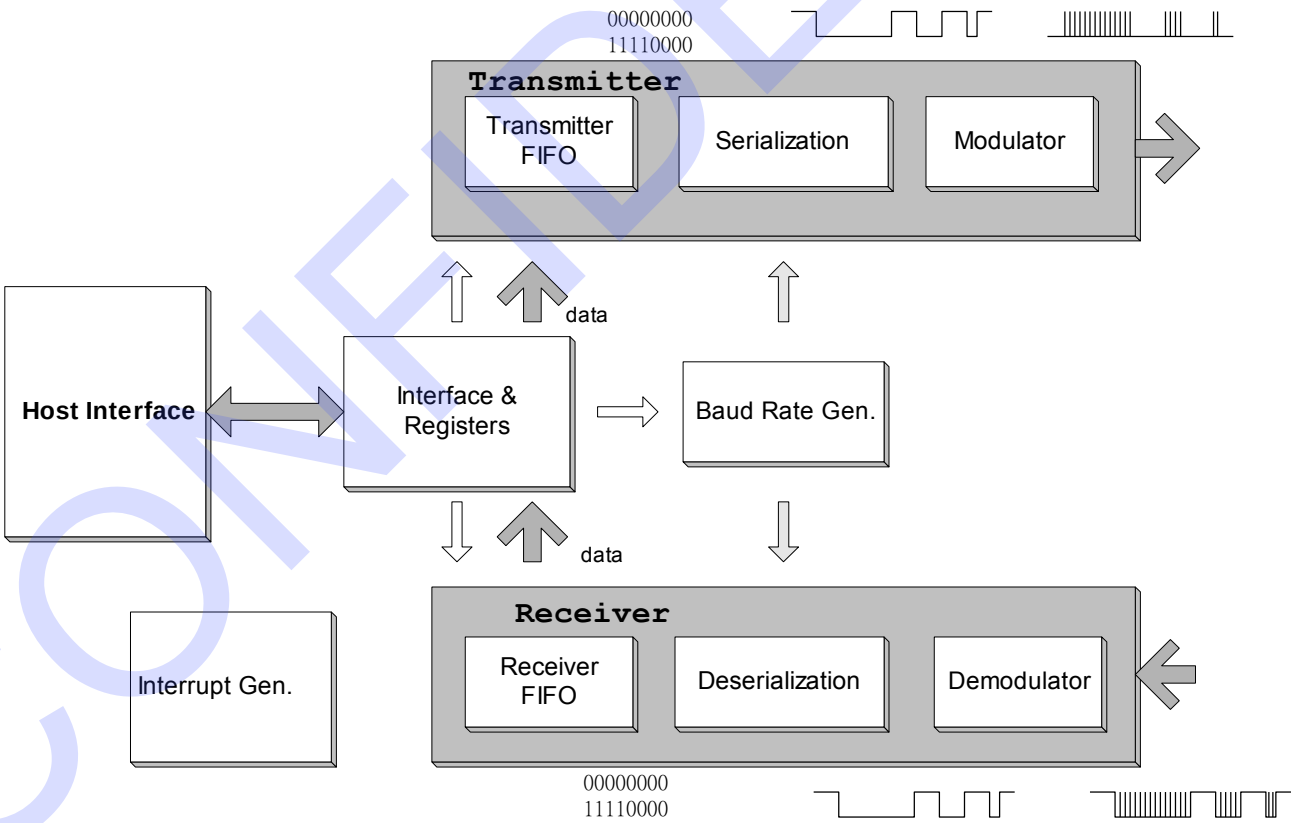

CONFIDENTIAL

9.13.4 Transmit Operation

The data written to the Transmitter FIFO will be exactly serialized from LSB to MSB, modulated with the carrier frequency and sent to the CIRTX output. The data are either in bit-string format or run-length decode.

Before the data transmission can be started, code byte write operation must be performed to the Transmitter FIFO DR. Bit TXRLE of TCR1 needs tobe set to “1” before the data in run-length decode can be written into the Transmitter FIFO. Setting TXENDF of TCR1 will enable the data transmission deferral, and avoid the Transmitter FIFO underrun. The bit width of the serialized bit string is determined by the value programmed in the baud rate divisor registers, BDLR and BDHR. When the two bits, HCFS and CFQ[4:0], are set, either the high-speed or low-speed carrier range is selected, and the corresponding carrier frequency will also be determined. Bit TXMPM[1:0] and TXMPW[2:0] specify the pulse number in a bit width and the required duty cycles of the carrier pulse according to the communication protocol. Only a logic “0” can activate the Transmitter LED in the format of a series of modulating pulses.

9.13.5 Receive Operation

The Receiver function will beenabled if bit RXEN of RCR is set to “1”. Either demodulated or modulated RX# signal is loaded into Receiver FIFO, and bit RXEND of RCR determines whether the demodulation logic should be used or not. It determines the baud rate by programming the baud rate divisor registers BDLR and BDHR, and the carrier frequencyby programming bit HCFS and CFQ[4:0]. Set RDWOS to “0” to synchronize. Bit RXACT ofRCR is set to “1” when the serial data or the selected carrier is incoming, and the sampled data will then be kept in Receiver FIFO. Write “1” to bit RXACT to stop the Receiver operation whereas “0” to bit RXEN to disable it.

9.13.6 Register Description and Address

Table 9-29. CIR Register

Register Name	R/W	Address	Default
CIR Data Register (DR)	R/W	Base + 0h	FFh
CIR Interrupt Enable Register (IER)	R/W	Base + 1h	00h
CIR Receiver Control Register (RCR)	R/W	Base + 2h	01h
CIR Transmitter Control Register 1 (TCR1)	R/W	Base + 3h	00h
CIR Transmitter Control Register 2 (TCR2)	R/W	Base + 4h	5Ch
CIR Transmitter Status Register (TSR)	R	Base + 5h	00h
CIR Receiver Status Register (RSR)	R	Base + 6h	00h
CIR Baud Rate Divisor Low Byte Register (BDLR)	R/W	Base + 5h	00h
CIR Baud Rate Divisor High Byte Register (BDHR)	R/W	Base + 6h	00h
CIR Interrupt Identification Register (IIR)	R/W	Base + 7h	01h

CONFIDENTIAL

9.13.6.1 CIR Data Register (DR)

The DR, an 8-bit **read/write** register, is the data port for CIR. Data are transmitted and received through it.

Address: Base Address + 0h

Bit	R/W	Default	Description
7-0	R/W	FFh	**CIR Data Register (DR[7:0])** Writing data to this register causes data to be written to Transmitter FIFO. Reading data from this register causes data to be received from Receiver FIFO.

9.13.6.2 CIR Interrupt Enable Register (IER)

The IER, an 8-bit **read/write** register, is to enable the CIR interrupt request.

Address: Base Address + 1h

Bit	R/W	Default	Description
7	R/W	0b	**Transmitter Data Output Select (TX_sel)** This bit is to select transmitter data output. 0: CIRTX1 (Default) 1: CIRTX2
6	R/W	0b	**Receiver Data Input Select (RX_sel)** This bit is to select receiver data input. 0: CIRRX1 (Default) 1: CIRRX2
5	R/W	0b	**Reset** The function of this bit is software reset. Writing “1” to this bit resets register DR, IER, TCR1, BDLR, BDHR and IIR and then it will be self-cleared to the initial value.
4	R/W	0b	**Baud Rate Register Enable (BR)** This bit is to control whether the baud rate register can enable read/write function or not. 1: Enable 0: Disable
3	R/W	0b	**Interrupt Enable Control (IEC)** This bit is to control whetherthe interrupt function can be enabled or not. 1: Enable 0: Disable
2	R/W	0b	**Receiver FIFO Overrun Interrupt Enable (RFOIE)** This bit is to control Receiver FIFO Overrun Interrupt request. 1: Enable 0: Disable
1	R/W	0b	**Receiver Data Available Interrupt Enable (RDAIE)** This bit is to enable Receiver Data Available Interrupt request. The Receiver will generate this interrupt when the data available in FIFO exceed the FIFO threshold level. 1: Enable 0: Disable
0	R/W	0b	**Transmitter Low Data Level Interrupt Enable (TLDLIE)** This bit is to enable Transmitter Low Data Level Interrupt request. The Transmitter will generate this interrupt when the data available inFIFO are less than the FIFO threshold Level. 1: Enable 0: Disable

CONFIDENTIAL

9.13.6.3 CIR Receiver Control Register (RCR)

The RCR, an 8-bit **read/write** register, is to control the CIR Receiver.

Address: Base Address + 2h

Bit	R/W	Default	Description
7	R/W	0b	**Receiver Data without Sync. (RDWOS)** This bit is to control the sync. logic for receiveddata. Set this bit to “1” to obtain the received data without sync. logic. Set this bit to “0” to obtain the received data with sync. logic.
6	R/W	0b	**High-Speed Carrier Frequency Select (HCFS)** This bit is to select the carrier frequency between the high-speed and low-speed. 0: 30-58 kHz (Default) 1: 400-500 kHz
5	R/W	0b	**Receiver Enable (RXEN)** This bit is to enable the Receiver function. Receiver Enable and RXACT will be activated if the selected carrier frequency is received. 1: Enable 0: Disable
4	R/W	0b	**Receiver Demodulation Enable (RXEND)** This bit is to control the Receiver Demodulation logic. If the Receiver device can not demodulate the correct carrier, set this bit to “1” to enable it. 1: Enable 0: Disable
3	R/W	0b	**Receiver Active (RXACT)** This bit is to control the Receiver operation. This bit is set to “0” when the Receiver is inactive. This bit will be set to “1” when the Receiver detects a pulse (RXEND=0) or pulse-train (RXEND=1) with the correct carrier frequency. The Receiver then starts to sample the input data when Receiver Active is set. Write a “1” to this bit to clear the Receiver Active condition and make the Receiver enter the inactive mode.
2-0	R/W	001b	**Receiver Demodulation Carrier Range (RXDCR[2:0])** These three bits are to set the tolerance of the Receiver. For the detailed demodulation carrier frequency,please refer toTable 9-31. Receiver Demodulation Low Frequency (HCFS = 0)and Table 9-32. Receiver Demodulation High Frequency (HCFS = 1) on page 192 and 193.

CONFIDENTIAL

9.13.6.4 CIR Transmitter Control Register 1 (TCR1)

The TCR1, an 8-bit **read/write** register, is used to control the Transmitter.

Address: Base Address + 3h

Bit	R/W	Default	Description
7	R/W	0b	**FIFO Clear (FIFOCLR)** Writing a "1" to this bit clears FIFO. This bit is then self-cleared to "0".
6	R/W	0b	**Internal Loopback Enable (ILE)** This bit is to execute internal loopback for test and must be "0" in normal operation. 1: Enable 0: Disable
5-4	R/W	0b	**FIFO Threshold Level (FIFOTL)** These two bits are used to set the FIFO threshold level. The FIFO length is 32 bytes for TX or RX function (ILE = 0) in normal operation and 16 bytes for both TX and RX in the internal loopback mode (ILE = 1). **16-Byte Mode** **32-Byte Mode** 00 1 1 (Default) 01 3 7 10 7 17 11 13 25
3	R/W	0b	**Transmitter Run Length Enable (TXRLE)** This bit controls the Transmitter Run Length encoding/decoding mode, which condenses a series of "1" or "0" into one byte with the bit value stored in bit 7 and number of bits minus 1 in bit 6-0. 1: Enable 0: Disable
2	R/W	0b	**Transmitter Deferral (TXENDF)** This bit is to avoid Transmitter underrun condition. When this bit is set to "1", the Transmitter FIFO data will be kept until the transmitter time-out condition occurs, or FIFO reaches full.
1-0	R/W	0b	**Transmitter Modulation Pulse Mode (TXMPM[1:0])** These two bits are to define the Transmitter modulation pulse mode. **TXMPM[1:0]** **Modulation Pulse Mode** C_pls mode (Default): Pulses are generated continuously for the entire logic 0 bit period. 8_pls mode: 8 pulses are generated for each logic 0 bit. 6_pls mode: 6 pulses are generated for each logic 0 bit. 11: Reserved.

CONFIDENTIAL

9.13.6.5 CIR Transmitter Control Register (TCR2)

The TCR2, an 8-bit **read/write** register, is to determine the carrier frequency.

Address: Base Address + 4h

Bit	R/W	Default	Description
7-3	R/W	01011b	**Carrier Frequency (CFQ[4:0])** These five bits are to determine the modulation carrier frequency. Please refer to the following table.
2-0	R/W	100b	**Transmitter Modulation Pulse Width (TXMPW[2:0])** These three bits are to set the Transmitter Modulation pulse width. The duty cycle of the carrier will be determined according to the setting of the carrier frequency and the selection of Transmitter Modulation pulse width. **TXMPW[2:0]** / **HCFS = 0** / **HCFS = 1** 000 / Reserved / Reserved 001 / Reserved / Reserved 010 / 6 μs / 0.7 μs 011 / 7 μs / 0.8 μs **100** / **8.7 μs** / **0.9 μs (Default)** 101 / 10.6 μs / 1.0 μs 110 / 13.3 μs / 1.16 μs 111 / Reserved / Reserved

CONFIDENTIAL

Table 9-30. Modulation Carrier Frequency

CFQ	Low Frequency (HCFS =0)	High Frequency (HCFS = 1)
00000	27 kHz	-
00010	29 kHz	-
00011	30 kHz	400 kHz
00100	31 kHz	-
00101	32 kHz	-
00110	33 kHz	-
00111	34 kHz	-
01000	35 kHz	450 kHz
01001	36 kHz	-
01010	37 kHz	-
01011	**38 kHz (default)**	**480 kHz (default)**
01100	39 kHz	-
01101	40 kHz	500 kHz
01110	41 kHz	-
01111	42 kHz	-
10000	43 kHz	-
10001	44 kHz	-
10010	45 kHz	-
10011	46 kHz	-
10100	47 kHz	-
10101	48 kHz	-
10110	49 kHz	-
10111	50 kHz	-
11000	51 kHz	-
11001	52 kHz	-
11010	53 kHz	-
11011	54 kHz	-
11100	55 kHz	-
11101	56 kHz	-
11110	57 kHz	-
11111	58 kHz	-

CONFIDENTIAL

Table 9-31. Receiver Demodulation Low Frequency (HCFS = 0)

RXDCR	001		010		011		100		101		110		
CFQ	Min.	Max.	Min.	Max.	Min.	Max.	Min.	Max.	Min.	Max.	Min.	Max.	(Hz)
00001	26.25	29.75	24.50	31.50	22.75	33.25	21.00	35.00	19.25	36.75	17.50	38.50	28k
00010	27.19	30.81	25.38	32.63	23.56	34.44	21.75	36.25	19.94	38.06	18.13	39.88	29k
00011	28.13	31.88	26.25	33.75	24.38	35.63	22.50	37.50	20.63	39.38	18.75	41.25	30k
00100	29.06	32.94	27.13	34.88	25.19	36.81	23.25	38.75	21.31	40.69	19.38	42.63	31k
00101	30.00	34.00	28.00	36.00	26.00	38.00	24.00	40.00	22.00	42.00	20.00	44.00	32k
00110	30.94	35.06	28.88	37.13	26.81	39.19	24.75	41.25	22.69	43.31	20.63	45.38	33k
00111	31.88	36.13	29.75	38.25	27.63	40.38	25.50	42.50	23.38	44.63	21.25	46.75	34k
01000	32.81	37.19	30.63	39.38	28.44	41.56	26.25	43.75	24.06	45.94	21.88	48.13	35k
01001	33.75	38.25	31.50	40.50	29.25	42.75	27.00	45.00	24.75	47.25	22.50	49.50	36k
01010	34.69	39.31	32.38	41.63	30.06	43.94	27.75	46.25	25.44	48.56	23.13	50.88	37k
01011	**35.63**	**40.38**	**33.25**	**42.75**	**30.88**	**45.13**	**28.50**	**47.50**	**26.13**	**49.88**	**23.75**	**52.25**	**38k**
01100	36.56	41.44	34.13	43.88	31.69	46.31	29.25	48.75	26.81	51.19	24.38	53.63	39k
01101	37.50	42.50	35.00	45.00	32.50	47.50	30.00	50.00	27.50	52.50	25.00	55.00	40k
01110	38.44	43.56	35.88	46.13	33.31	48.69	30.75	51.25	28.19	53.81	25.63	56.38	41k
01111	39.38	44.63	36.75	47.25	34.13	49.88	31.50	52.50	28.88	55.13	26.25	57.75	42k
10000	40.31	45.69	37.63	48.38	34.94	51.06	32.25	53.75	29.56	56.44	26.88	59.13	43k
10001	41.25	46.75	38.50	49.50	35.75	52.25	33.00	55.00	30.25	57.75	27.50	60.50	44k
10010	42.19	47.81	39.38	50.63	36.56	53.44	33.75	56.25	30.94	59.06	28.13	61.88	45k
10011	43.13	48.88	40.25	51.75	37.38	54.63	34.50	57.50	31.63	60.38	28.75	63.25	46k
10100	44.06	49.94	41.13	52.88	38.19	55.81	35.25	58.75	32.31	61.69	29.38	64.63	47k
10101	45.00	51.00	42.00	54.00	39.00	57.00	36.00	60.00	33.00	63.00	30.00	66.00	48k
10110	45.94	52.06	42.88	55.13	39.81	58.19	36.75	61.25	33.69	64.31	30.63	67.38	49k
10111	46.88	53.13	43.75	56.25	40.63	59.38	37.50	62.50	34.38	65.63	31.25	68.75	50k
11000	47.81	54.19	44.63	57.38	41.44	60.56	38.25	63.75	35.06	66.94	31.88	70.13	51k
11001	49.18	54.55	46.88	57.69	44.78	61.22	42.86	65.22	41.10	69.77	39.47	75.00	52k
11010	49.69	56.31	46.38	59.63	43.06	62.94	39.75	66.25	36.44	69.56	33.13	72.88	53k
11011	50.63	57.38	47.25	60.75	43.88	64.13	40.50	67.50	37.13	70.88	33.75	74.25	54k
11100	51.56	58.44	48.13	61.88	44.69	65.31	41.25	68.75	37.81	72.19	34.38	75.63	55k
11101	52.50	59.50	49.00	63.00	45.50	66.50	42.00	70.00	38.50	73.50	35.00	77.00	56k
11110	53.44	60.56	49.88	64.13	46.31	67.69	42.75	71.25	39.19	74.81	35.63	78.38	57k

CONFIDENTIAL

Table 9-32. Receiver Demodulation High Frequency (HCFS = 1)

RXDCR	001		010		011		100		101		110		
CFQ	Min.	Max.	Min.	Max.	Min.	Max.	Min.	Max.	Min.	Max.	Min.	Max.	(Hz)
00011	375	425	350	450	325	475	300	500	275	525	250	550	400k
01000	421.9	478.1	393.8	506.3	365.6	534.4	337.5	562.5	309.4	590.6	281.3	618.8	450k
01011	450	510	420	540	390	570	360	600	330	630	300	660	**480k**
01011	468.8	531.3	437.5	562.5	406.3	593.8	375	625	343.8	656.3	312.5	687.5	500k

9.13.6.6 CIR Transmitter Status Register (TSR)

The TSR, an 8-bit **read only** register, provides the Transmitter FIFO status.

Address: Base Address + 5h

Bit	R/W	Default	Description
7-6	R	-	**Reserved**
5-0	R	000000b	**Transmitter FIFO Byte Count (TXFBC[5:0])** Return the number of bytes left in the Transmitter FIFO.

9.13.6.7 CIR Receiver FIFO Status Register (RSR)

The RSR, an 8-bit **read only** register, provides the Receiver FIFO status.

Address: Base Address + 6h

Bit	R/W	Default	Description
7	R	0b	**Receiver FIFO Time-out (RXFTO)** This bit will be set to "1" when a Receiver FIFO time-out condition occurs. Followings are the conditions required for the occurrence of Receiver FIFO time-out: 1. At least one byte of data are queued in the Receiver FIFO for more than 64 ms. 2. The Receiver has been inactive (RXACT=0) for more than 64 ms.
6	-	-	**Reserved**
5-0	R	000000b	**Receiver FIFO Byte Count (RXFBC)** Return the number of bytes left in Receiver FIFO.

9.13.6.8 CIR Baud Rate Divisor Low Byte Register (BDLR)

The BDLR, an 8-bit **read/write** register, is to program the CIR Baud Rate clock.

Address: Base Address + 5h (when BR = 1)

Bit	R/W	Default	Description
7-0	R/W	00h	**Baud Rate Divisor Low Byte (BDLR[7:0])** These bits, for dividing the Baud Rate clock, are the low byte of the register.

CONFIDENTIAL

9.13.6.9 CIR Baud Rate Divisor High Byte Register (BDHR)

The BDHR, an 8-bit **read/write** register, is used to program the CIR Baud Rate clock.

Address: Base Address + 6h (when BR = 1)

Bit	R/W	Default	Description
7-0	R/W	00h	**Baud Rate Divisor High Byte (BDHR[7:0])** These bits, for dividing the Baud Rate clock, are the high byte of the register.

Baud rate divisor = 115200 / baud rate
Ex1: 2400 bps → 115200 /2400 = 48 → 48(d) = 0030(h) → BDHR = 00h, BDLR = 30h
Ex2: bit width = 0.565 ms (1770 bps (115200 / 1770 = 65(d) = 0041(h) (BDHR = 00(h), BDLR = 41(h)

9.13.6.10 CIR Interrupt Identification Register (IIR)

The IIR, an 8-bit register, is to identify the pending interrupt.

Address: Base address + 7h

Bit	R/W	Default	Description
7-3	-	-	**Reserved**
2-1	R	00b	**Interrupt Identification** These two bits are to identify the source of the pending interrupt. **IIR[1:0] Interrupt Source** 00 No interrupt 01 Transmitter Low Data Level Interrupt 10 Receiver Data Stored Interrupt 11 Receiver FIFO Overrun Interrupt
0	R	1b	**Interrupt Pending** This bit will be set to "1" while an interrupt is pending.

CONFIDENTIAL

10. DC Electrical Characteristics

Operating Conditions

3VSB/SYS_3VSB/AVCC3 ..... 3.3V ± 5%
VCCBT ..... 1.8V/3.3± 5%
VBAT ..... 2.3V to 3.6V
Operation Temperature (Topt) ..... 0°C to +70°C

Absolute Maximum Ratings*

Applied Voltage ..... -0.3V to 3.6V
Input Voltage (Vi) ..... -0.3V to VCC3 + 0.3V
Output Voltage (Vo) ..... -0.3V to VCC3 + 0.3V
Operation Temperature (Topt) ..... 0°C to +70°C
Storage Temperature ..... -55°C to +125°C

***Comments**

Stresses above those listed under "Absolute Maximum Ratings" may cause permanent damage to this device. These are stress ratings only. Functional operation of this device at these or any other conditions above those indicated in the operational sections of this specification is not implied or intended. Exposure to the absolute maximum rating conditions for extended periods may affect device reliability.

3.3V DC Electrical Characteristics (VCC3=3.3V±5%)

Symbol	Parameter	Conditions	Min.	Typ.	Max.	Unit
DO8 Buffer						
V_{OL}	Low Output Voltage	I_{OL} = 8 mA			0.4	V
V_{OH}	High Output Voltage	I_{OH} = -8 mA	2.4			V
DOD8 Buffer						
V_{OL}	Low Output Voltage	I_{OL} = 8 mA			0.4	V
DIO8 Type Buffer						
V_{OL}	Low Output Voltage	I_{OL} = 8 mA			0.4	V
V_{OH}	High Output Voltage	I_{OH} = -8 mA	2.4			V
V_{IL}	Low Input Voltage				0.8	V
V_{IH}	High Input Voltage		2.2			V
I_{IL}	Low Input Leakage	V_{IN} = 0			10	μA
I_{IH}	High Input Leakage	V_{IN} = VCC3			-10	μA
I_{OZ}	3-state Leakage				20	μA
DIOD8 Type Buffer						
V_{OL}	Low Output Voltage	I_{OL} = 8 mA			0.4	V
V_{IL}	Low Input Voltage				0.8	V
V_{IH}	High Input Voltage		2.2			V
I_{IL}	Low Input Leakage	V_{IN} = 0			10	μA
I_{IH}	High Input Leakage	V_{IN} = VCC3			-10	μA
I_{OZ}	3-state Leakage				20	μA
DIO16 Type Buffer						
V_{OL}	Low Output Voltage	I_{OL} = 16 mA			0.4	V
V_{OH}	High Output Voltage	I_{OH} = -16 mA	2.4			V
V_{IL}	Low Input Voltage				0.8	V

CONFIDENTIAL

V_{IH}	High Input Voltage		2.2			V
I_{IL}	Low Input Leakage	V_{IN} = 0			10	µA
I_{IH}	High Input Leakage	V_{IN} = VCC3			-10	µA
I_{OZ}	3-state Leakage				20	µA
DIO16 Type Buffer						
V_{OL}	Low Output Voltage	I_{OL} = 8 mA			0.4	V
V_{IL}	Low Input Voltage				0.4	V
V_{IH}	High Input Voltage		1.35			V
I_{IL}	Low Input Leakage	V_{IN} = 0			10	µA
I_{IH}	High Input Leakage	V_{IN} = VCC1P8V			-10	µA
I_{OZ}	3-state Leakage				20	µA
DIOD16 Type Buffer						
V_{OL}	Low Output Voltage	I_{OL} = 16 mA			0.4	V
V_{IL}	Low Input Voltage				0.8	V
V_{IH}	High Input Voltage		2.2			V
I_{IL}	Low Input Leakage	V_{IN} = 0			10	µA
I_{IH}	High Input Leakage	V_{IN} = VCC3			-10	µA
I_{OZ}	3-state Leakage				20	µA
DO24L Buffer						
V_{OL}	Low Output Voltage	I_{OL} = 24 mA			0.4	V
V_{OH}	High Output Voltage	I_{OH} = -8 mA	2.4			V
DIO24 Type Buffer						
V_{OL}	Low Output Voltage	I_{OL} = 24 mA			0.4	V
V_{OH}	High Output Voltage	I_{OH} = -16 mA	2.4			V
V_{IL}	Low Input Voltage				0.8	V
V_{IH}	High Input Voltage		2.2			V
I_{IL}	Low Input Leakage	V_{IN} = 0			10	µA
I_{IH}	High Input Leakage	V_{IN} = VCC3			-10	µA
I_{OZ}	3-state Leakage				20	µA
DI Type Buffer						
V_{IL}	Low Input Voltage				0.8	V
V_{IH}	High Input Voltage		2.2			V
V_{IH}	High Input Voltage(clock)		2.2			V
I_{IL}	Low Input Leakage	V_{IN} = 0				µA
I_{IH}	High Input Leakage	V_{IN} = VCC3				µA
DI-LType Buffer						
V_{IL}	Low Input Voltage				0.4	V

CONFIDENTIAL

V_{IH}	High Input Voltage		1.35			V
I_{IL}	Low Input Leakage	V_{IN} = 0				μA
I_{IH}	High Input Leakage	V_{IN} = VCC3				μA

1.8V DC Electrical Characteristics (VCC3=1.8V±5%)

Symbol	Parameter	Conditions	Min.	Typ.	Max.	Unit
DIO-L Type Buffer						
V_{OL}	Low Output Voltage	I_{OL} = -3mA			0.45	V
V_{OH}	Hugh Output Voltage	I_{OH} = 3mA	1.35			V
V_{IL}	Low Input Voltage				0.45	V
V_{IH}	High Input Voltage		1.35			V
I_{IL}	Low Input Leakage	V_{IN} = 0			10	μA
I_{IH}	High Input Leakage	V_{IN} = 1.8V			-10	μA
I_{OZ}	3-state Leakage				20	μA
DI-L Type Buffer						
V_{IL}	Low Input Voltage				0.45	V
V_{IH}	High Input Voltage		1.35			V
I_{IL}	Low Input Leakage	V_{IN} = 0				μA
I_{IH}	High Input Leakage	V_{IN} = 1.8V				μA

CONFIDENTIAL

This page is intentionally left blank.

CONFIDENTIAL

11. AC Characteristics

11.1 Clock Input Timings

Symbol	Parameter	Min.	Typ.	Max.	Unit
t_1	Clock High Pulse Width when CLKIN=48 MHz[1]	8			nsec
t_2	Clock Low Pulse Width when CLKIN=48 MHz[1]	8			nsec
t_3	Clock Period when CLKIN=48 MHz[1]	20	21	22	nsec
t_4	Clock High Pulse Width when CLKIN=24 MHz[1]	18			nsec
t_5	Clock Low Pulse Width when CLKIN=24 MHz[1]	18			nsec
t_6	Clock Period when CLKIN=24 MHz[1]	40			nsec

Not tested. Guaranteed by design.

Figure 11-1. Clock Input Timings

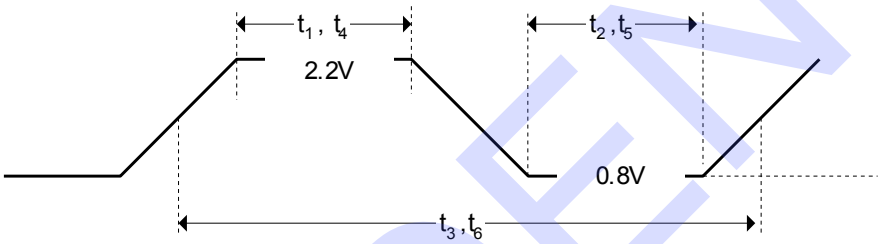

CONFIDENTIAL

11.2 LCLK (PCICLK) and LRESET Timings

Symbol	Parameter	Min.	Typ.	Max.	Unit
t_1	LCLK Cycle Time	28			nsec
t_2	LCLK High Time	11			nsec
t_3	LCLK Low Time	11			nsec
t_4	LRESET# Low Pulse Width	1.5			µsec

Figure 11-2. LCLK (PCICLK) and LRESET Timings

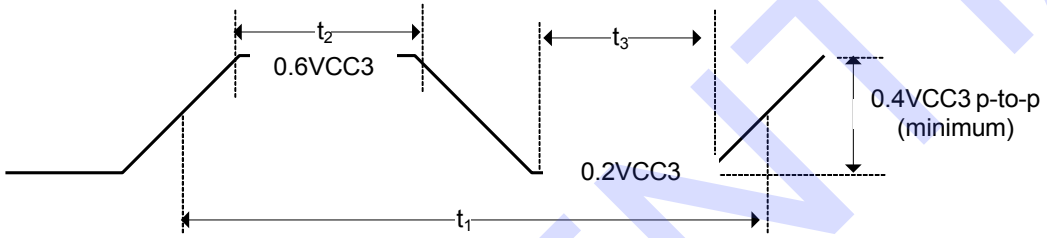

CONFIDENTIAL

11.3 LPC and SERIRQ Timings

Symbol	Parameter	Min.	Typ.	Max.	Unit
t_1	Float to Active Delay	3			nsec
t_2	Output Valid Delay			12	nsec
t_3	Active to Float Delay			20	nsec
t_4	Input Setup Time	7			nsec
t_5	Input Hold Time	0			nsec

Figure 11-3. LPC and SERIRQ Timings

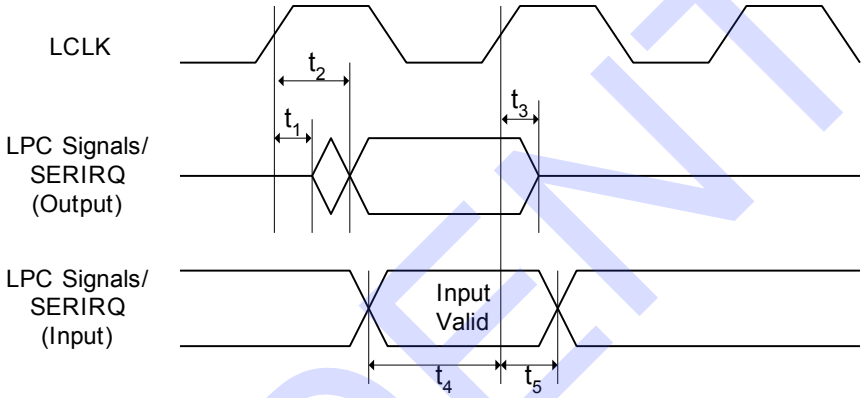

CONFIDENTIAL

11.4 Serial Port, ASKIR, SIR and Consumer Remote Control Timings

Symbol	Parameter	Conditions	Min.	Max.	Unit
t_1	Single Bit Time in Serial Port and ASKIR	Transmitter	t_{BTN} – 25 Note1	t_{BTN} + 25	nsec
		Receiver	t_{BTN} – 2%	t_{BTN} + 2%	nsec
t_2	Modulation Signal Pulse Width in ASKIR	Transmitter	950	1050	nsec
		Receiver	500		nsec
t_3	Modulation Signal Period in ASKIR	Transmitter	1975	2025	nsec
		Receiver	2000X(23/24)	2000X(25/24)	nsec
t_4	SIR Signal Pulse Width	Transmitter, Variable	(3/16) x t_{BTN} – 25	(3/16) x t_{BTN} + 25	nsec
		Transmitter, Fixed	1.48	1.78	µsec
		Receiver	1		µsec

Note 1: t_{BTN} is the nominal bit time in Serial Port, ASKIR, and SIR. It is determined by the setting on the Baud Rate Divisor registers.

Figure 11-4. Serial Port, ASKIR, SIR and Consumer Remote Control Timings

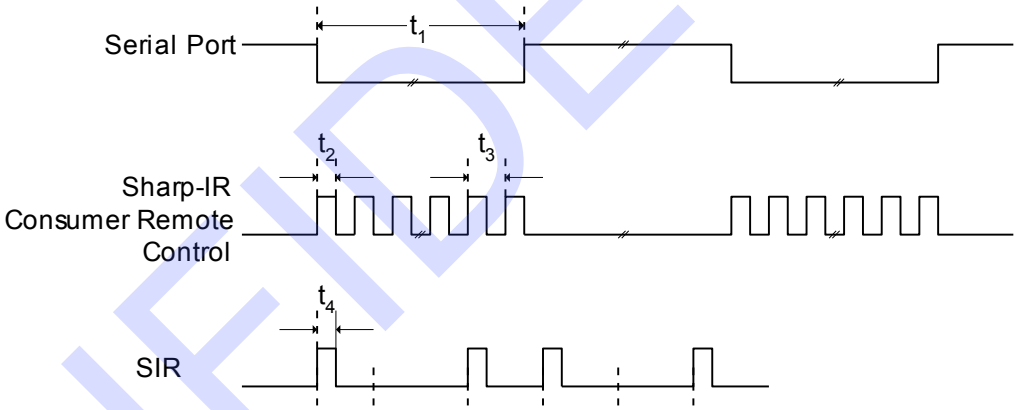

CONFIDENTIAL

11.5 Modem Control Timings

Symbol	Parameter	Min.	Typ.	Max.	Unit
t_1	Float to active delay			40	nsec

Figure 11-5. Modem Control Timings

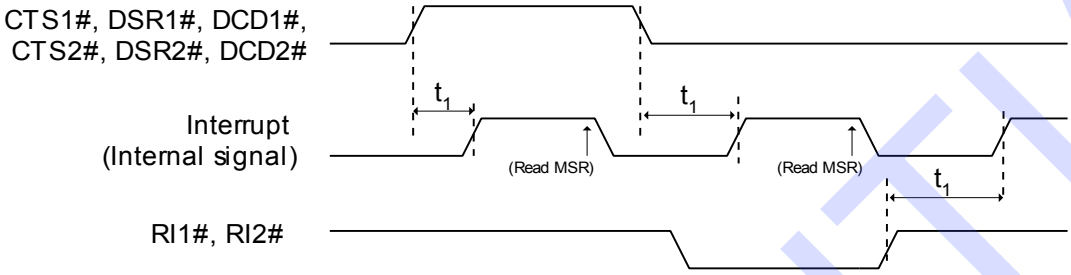

11.6 EPP Address or Data Write Cycle Timings

Symbol	Parameter	Min.	Typ.	Max.	Unit
t_1	WRITE# asserted to PD[7:0] valid			50	nsec
t_2	ASTB# or DSTB# asserted to WAIT# de-asserted	0		10	nsec
t_3	WAIT# de-asserted to ASTB# or DSTB# de-asserted	65		135	nsec
t_4	ASTB# or DSTB# de-asserted to WAIT# asserted	0			nsec
t_5	WAIT# asserted to WRITE# de-asserted	65			nsec
t_6	PD[7:0] invalid after WRITE# de-asserted	0			nsec

Figure 11-6. EPP Address or Data Write Cycle Timings

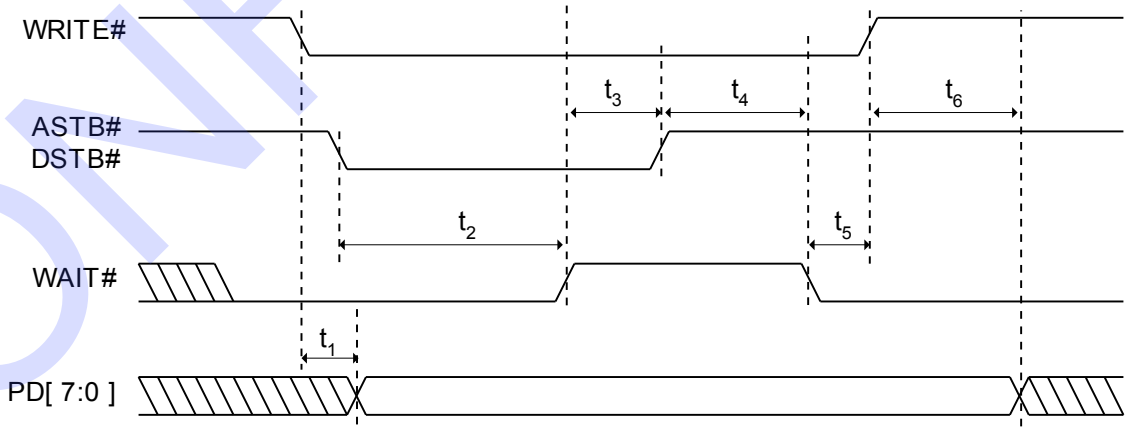

CONFIDENTIAL

11.7 Keyboard/Mouse Receive/Send Data Timings

Symbol	Parameter	Min.	Typ.	Max.	Unit
t_1	Time form DATA transition to falling edge of CLK (Receive)	5		25	μsec
t_2	Time form rising edge of CLK to DATA transition (Receive)	5		T4-5	μsec
t_3	Duration of CLK inactive (Receive/Send)	30		50	μsec
t_4	Duration of CLK active (Receive/Send)	30		50	μsec
t_5	Time to keyboard inhibit after clock 11 to ensure the keyboard device does not start another transmission (Receive)	>0	50		μsec
t_6	Time from inactive to active CLOCK transition, used to time when the auxiliary device samples DATA (Send)	5		25	μsec

Note: (1) The system can hold the 'clock' signal inactive to inhibit the next transmission.
(2) The system raises the 'clock' line to allow the next transmission.

Figure 11-7. Keyboard/Mouse Receive/Send Data Timings

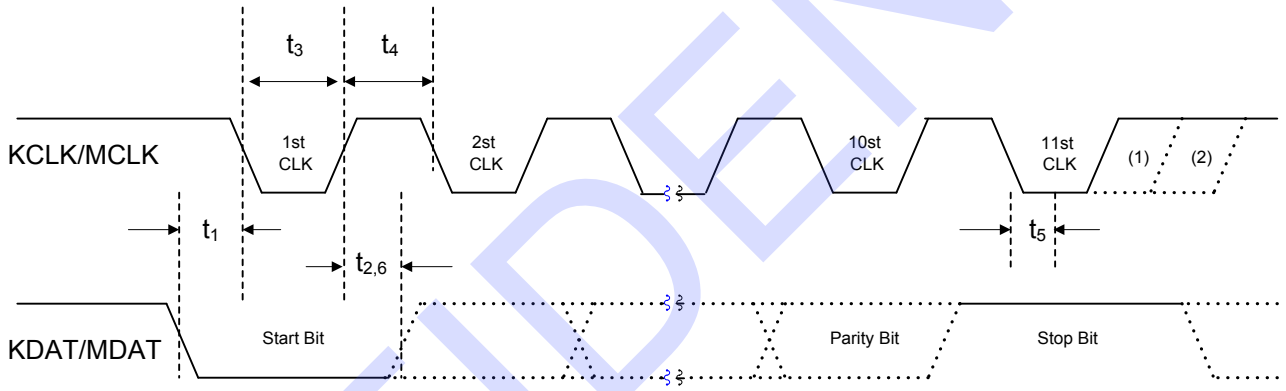

CONFIDENTIAL

11.8 EPP Address or Data Read Cycle Timings

Symbol	Parameter	Min.	Typ.	Max.	Unit
t_1	ASTB# or DSTB# asserted to WAIT# de-asserted			10	nsec
t_2	ASTB# or DSTB# asserted to PD[7:0] Hi-Z	0			nsec
t_3	PD[7:0] valid to WAIT# de-asserted	0			nsec
t_4	WAIT# de-asserted to ASTB# or DSTB# de-asserted	65		135	nsec
t_5	ASTB# or DSTB# de-asserted to WAIT# asserted	0			nsec
t_6	PD[7:0] invalid after ASTB# or DSTB# de-asserted	20			nsec

Figure 11-8. EPP Address or Data Read Cycle Timings

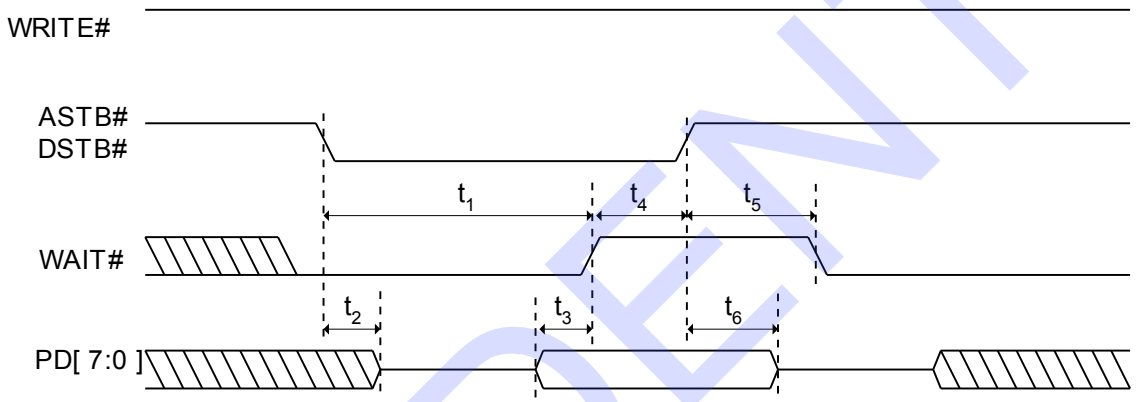

CONFIDENTIAL

11.9 ECP Parallel Port Forward Timings

Symbol	Parameter	Min.	Typ.	Max.	Unit
t_1	PD[7:0] and nAutoFd valid to nStrobe asserted			50	nsec
t_2	nStrobe asserted to Busy asserted	0			nsec
t_3	Busy asserted to nStrobe de-asserted	70		170	nsec
t_4	nStrobe de-asserted to Busy de-asserted	0			nsec
t_5	Busy de-asserted to PD[7:0] and nAutoFd changed	80		180	nsec
t_6	Busy de-asserted to nStrobe asserted	70		170	nsec

Figure 11-9. ECP Parallel Port Forward Timings

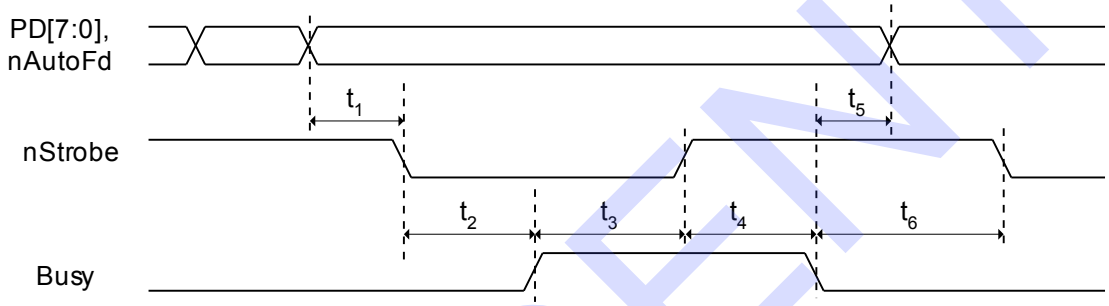

CONFIDENTIAL

11.10 ECP Parallel Port Backward Timings

Symbol	Parameter	Min.	Typ.	Max.	Unit
t_1	PD[7:0] valid to nAck asserted	0			nsec
t_2	nAck asserted to nAutoFd asserted	70		170	nsec
t_3	nAutoFd asserted to nAck de-asserted	0			nsec
t_4	nAck de-asserted to nAutoFd de-asserted	70		170	nsec
t_5	nAutoFd de-asserted to PD[7:0] changed	0			nsec
t_6	nAutoFd de-asserted to nAck asserted	0			nsec

Figure 11-10. ECP Parallel Port Backward Timings

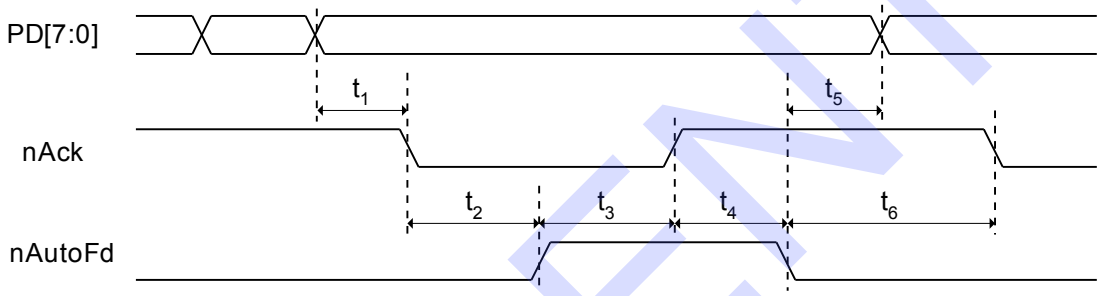

CONFIDENTIAL

11.11 RSMRST#and ACPI Power Control Signal Timings

Symbol	Parameter	Typ.	Unit
t_1	RSMRST# de-actives delay from SYS_3VSB=3V	85	msec
		85ms + VCCH_OK When IO_3VSB = SYS_3VSB	msec
$t_{2*Note1}$	PWRGD3 active delay from 0.8 * AVCC3	Reference:Section 11.12	msec
t_3	Overlap of PSON# and 3VSBSW#	10	msec
t_4	Delay time of 3VSBSW# falling edge to PWRGD3 falling edge	<1	msec

Figure 11-11. RSMRST# Timings

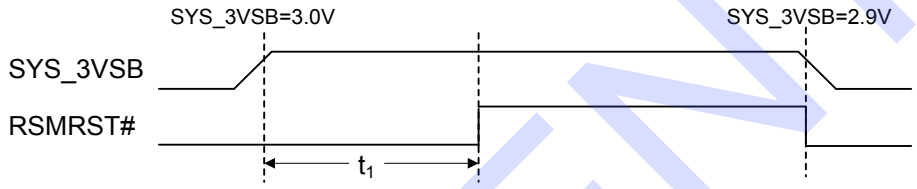

Figure 11-12. DPWROK Timings

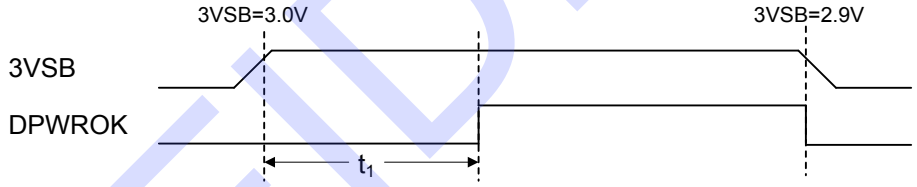

Figure11-13. ACPI Power Signal Timings

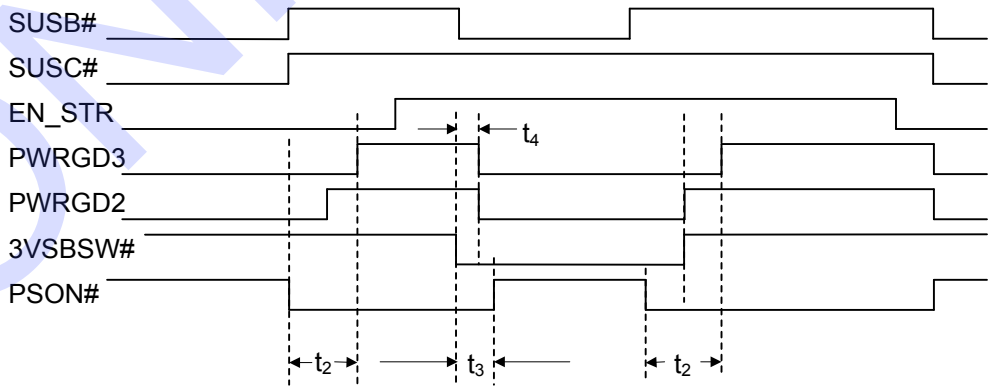

CONFIDENTIAL

11.12 PWRGD2, PWRGD3 Signal Timings

Symbol	Parameter	Min.	Typ.	Max.
t_6	Delay time of (3V/5V/12V reach 80% detected AND SUSB#) to internal_GD.		<1ms	
t_8	Delay time of internal_GD to PWRGD2 rising edge	43ms	57ms	71ms
t_9	Delay time of internal_GD to PWRGD3 rising edge	125ms	166ms	208ms
t_{10}	Delay time of SUSB# falling edge to PWRGD falling edge		<1ms	

Figure11-14. PWRGD 2/3 SignalCondition

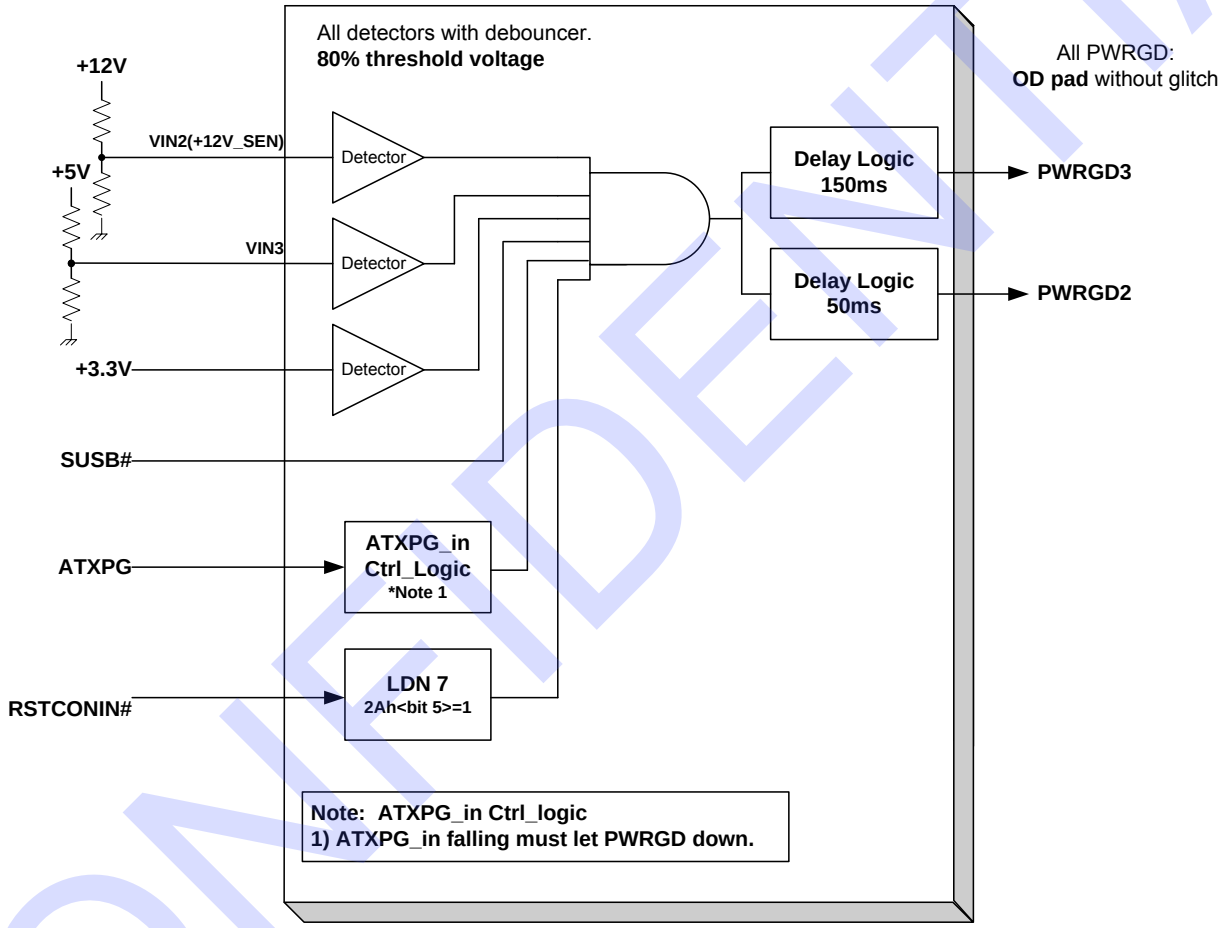

CONFIDENTIAL

Figure11-15. PWRGD2/3 Signal Timings

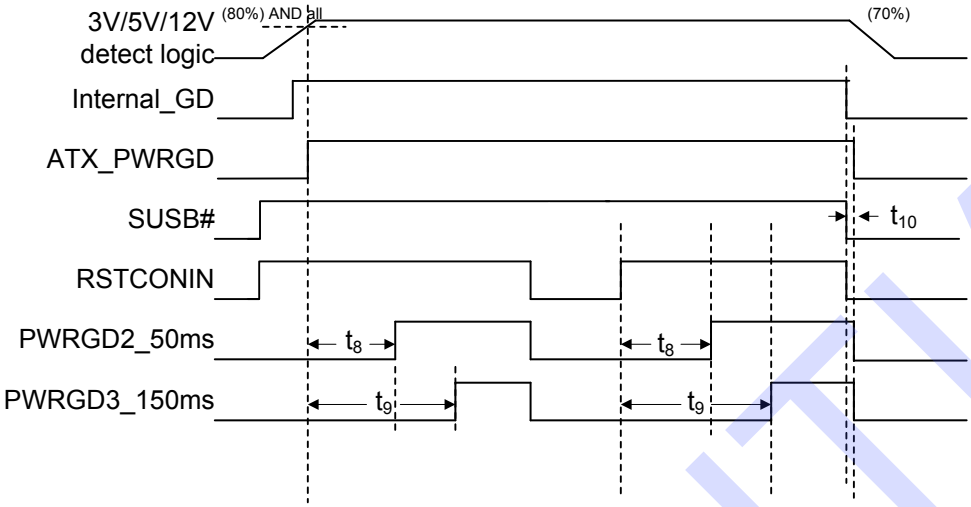

11.13 PCIRST#1, PCIRST#2 and PCIRST#3 Signal Timings

Figure11-16. PCIRST#1, PCIRST#2 and PCIRST#3 Signal Timings

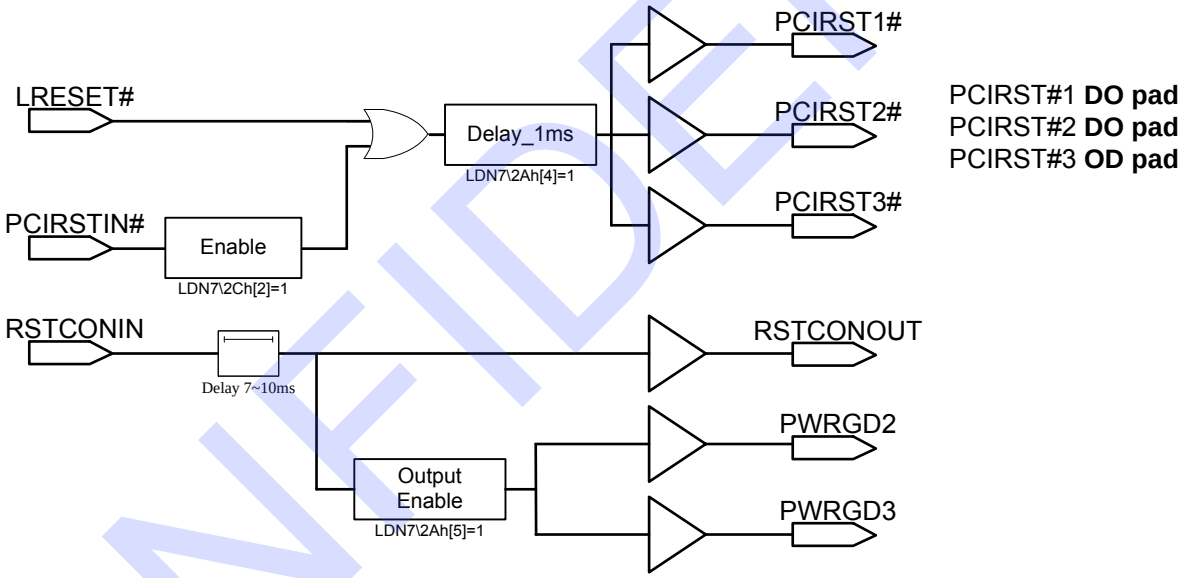

CONFIDENTIAL

11.14 Energy-using Product (EuP) Power Control Signal Timings

Symbol	Parameter	Min.	Typ.	Max.
t_{11}	Delay time of RSMRST# rising to first PWRON# pulse.	-	200ms	-
t_{12}	Delay time of AVCC3 falling edge to 5VSB_CTRL#rising edge.	-	5.2s	-

Figure11-17. EuP Function Signal Timings

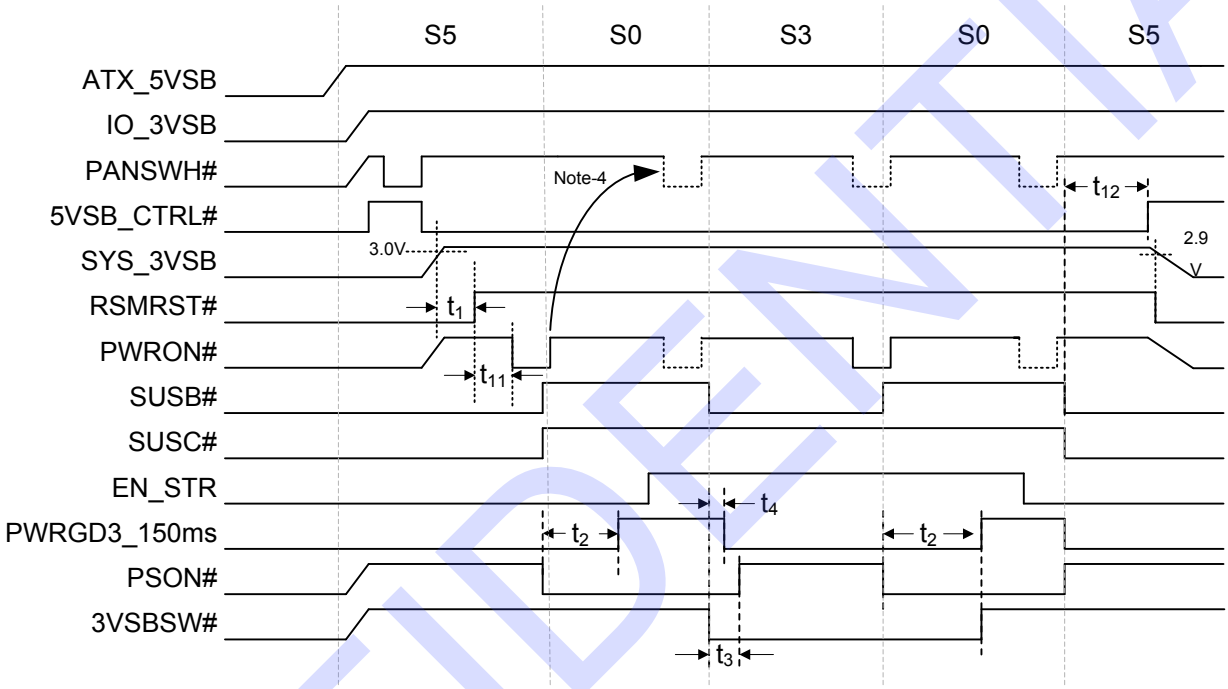

CONFIDENTIAL

11.15 5VAUX_SW Power Control Signal Timings

Figure11-18. 5VAUX_SW Signal Timings

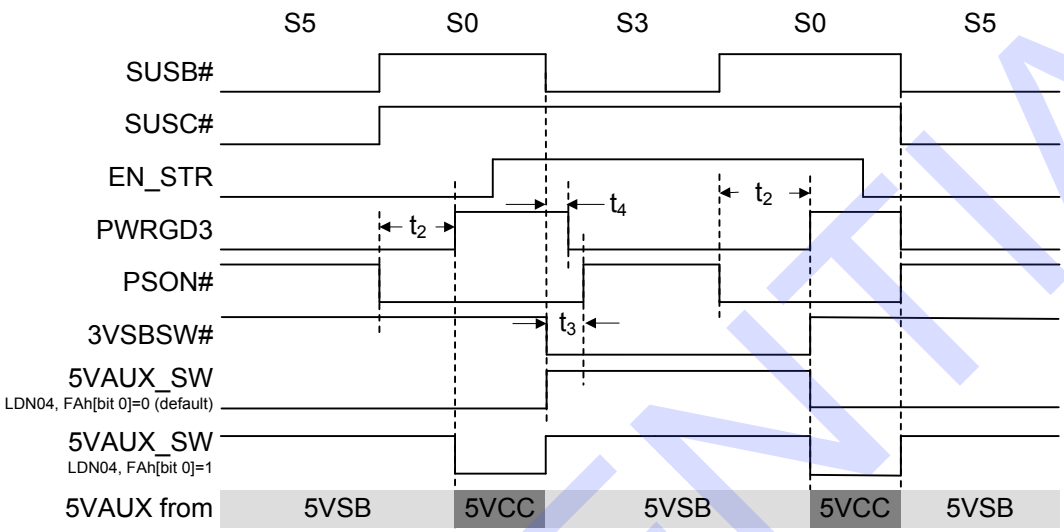

CONFIDENTIAL

Figure 11-19. PWRON# Timings

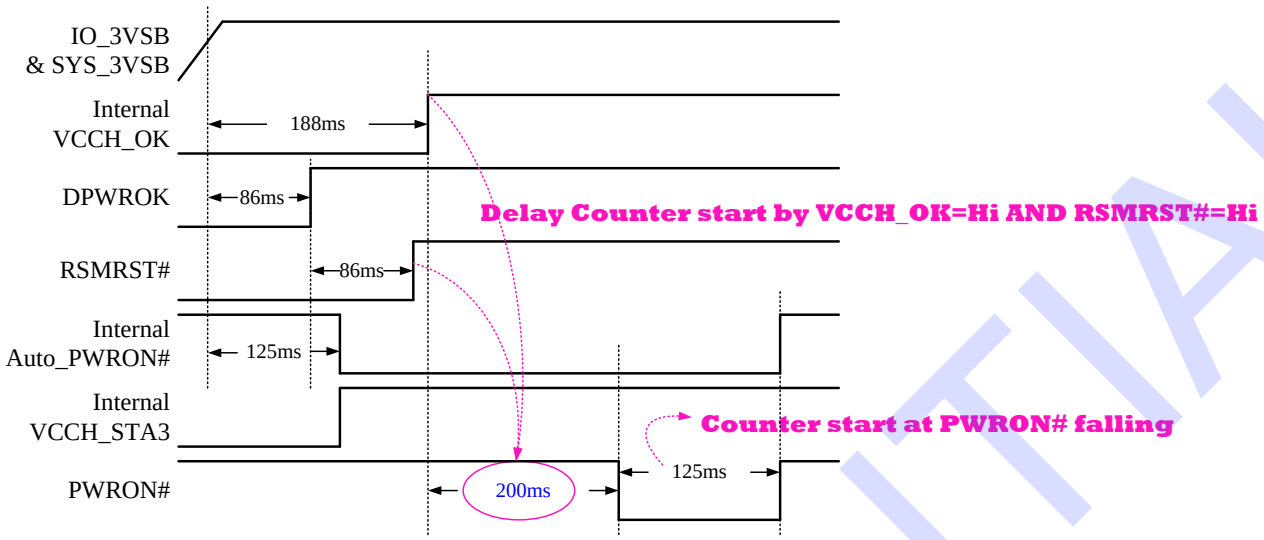

CONFIDENTIAL

11.16 DPWROK and SLP_SUS# Timings

Figure11-20. DPWORK Timings

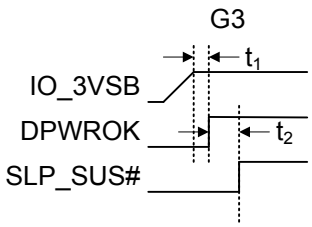

Figure11-21. SLP_SUS# Timings

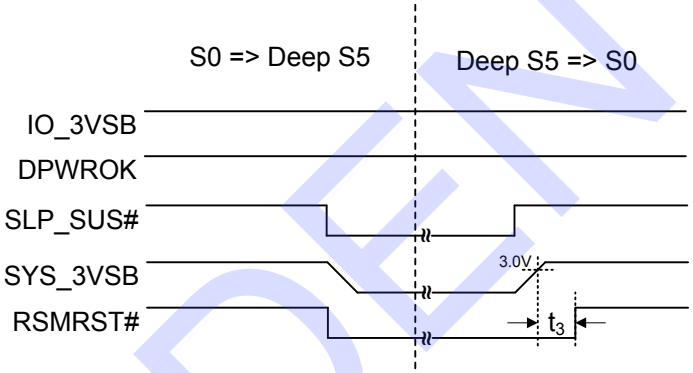

Table 11-1. RSMRST# Timings Parameter

Symbol	Typ.	Description
t_1	85ms	The rising edge of IO_3VSB to rising edge of DPWORK
t_2	by Chipset	The rising edge of IO_3VSB to rising edge of SLP_SUS#
t_3	75ms	SYS_3VSB voltage over 3.0V to the rising edge of RSMRST#

CONFIDENTIAL

11.17 UVP/OVP Timings

Table 11-2. UVP/OVP Timings Parameter

Symbol	Typ.	Description
t_2	LND4\F9h<4-3> 00: 0.5s 01: 1s (default) 10: 2s 11: 4s	PSON# Pull-up Time for Notice Mode

Table 11-3. UVP/OVP Detecting Voltage Threshold

Voltage Protected Range			12V（12.0V）	Voltage Protected Range		3V（3.3V）
UVP	**Control Reg. LDN4**		**FCh<1-0>**	**Control Reg. LDN4**		**FDh<1-0>**
	-15%	11b	10.2V	-10%	11b	2.97V
	-20%	10b	9.6V	-15%	10b	2.805V
	-25%(default)	**00b**	**9.0V**	**-20%(default)**	**00b**	**2.64V**
	-30%	01b	8.4V	-25%	01b	2.475V
OVP	**Control Reg. LDN4**		**FCh<3-2>**	**Control Reg. LDN4**		**FDh<3-2>**
	+10%	11b	13.2V	+10%	11b	3.63V
	+15%	10b	13.8V	+15%	10b	3.795V
	+20%(default)	**00b**	**14.4V**	**+20%(default)**	**00b**	**3.96V**
	+25%	01b	15V	+25%	01b	4.125V

Note: The UVP / OVP voltage range is determined by Figure11-22. UVP/OVP Application. Changing the resistance value will result in the change of the UVP / OVP voltage range. It is recommended to use the resistance value shown in Figure11-22. UVP/OVP Application.

Figure11-22. UVP/OVP Application

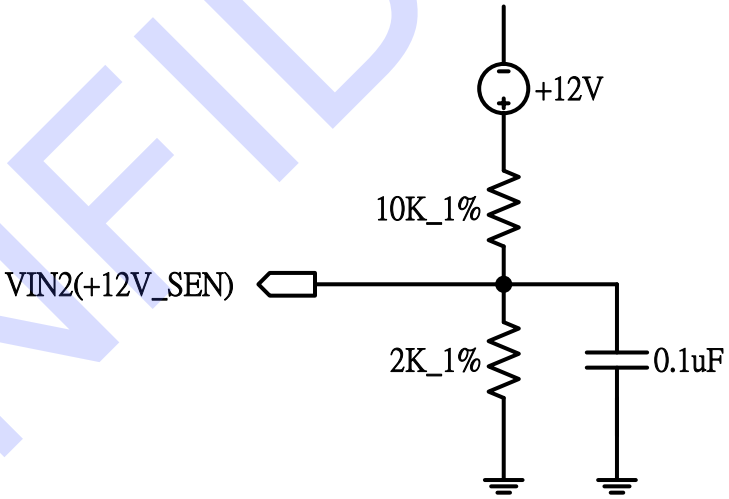

CONFIDENTIAL

11.17.1 Notice Mode

Figure11-23. UVP/OVP notice Mode Timings

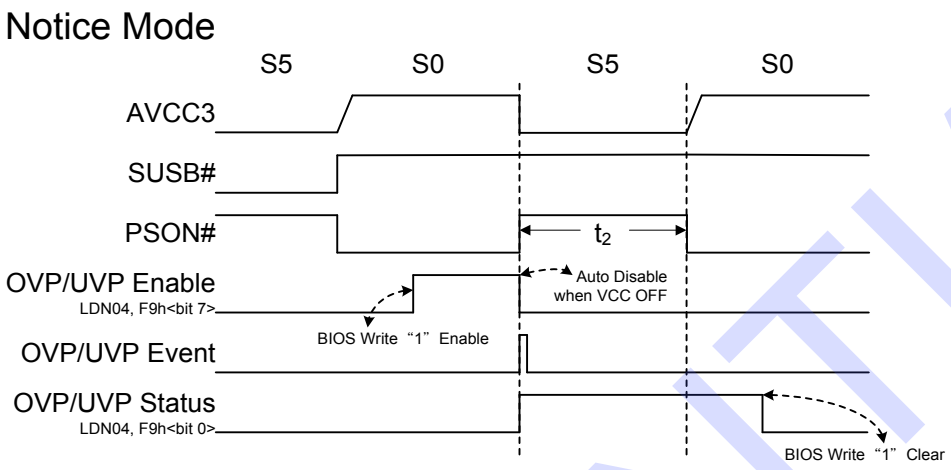

CONFIDENTIAL

11.18 RSTCONIN/RSTCONOUT Timings

Figure11-24. RSTCONIN/RSTCONOUT Timings

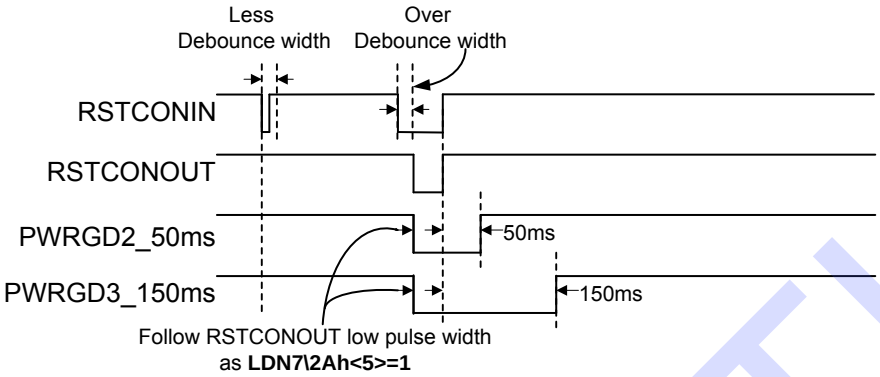

CONFIDENTIAL

11.19 GP14 Charge Port Power Control Specification

Figure11-25. GP14 USB Charger PortPower Control Timings

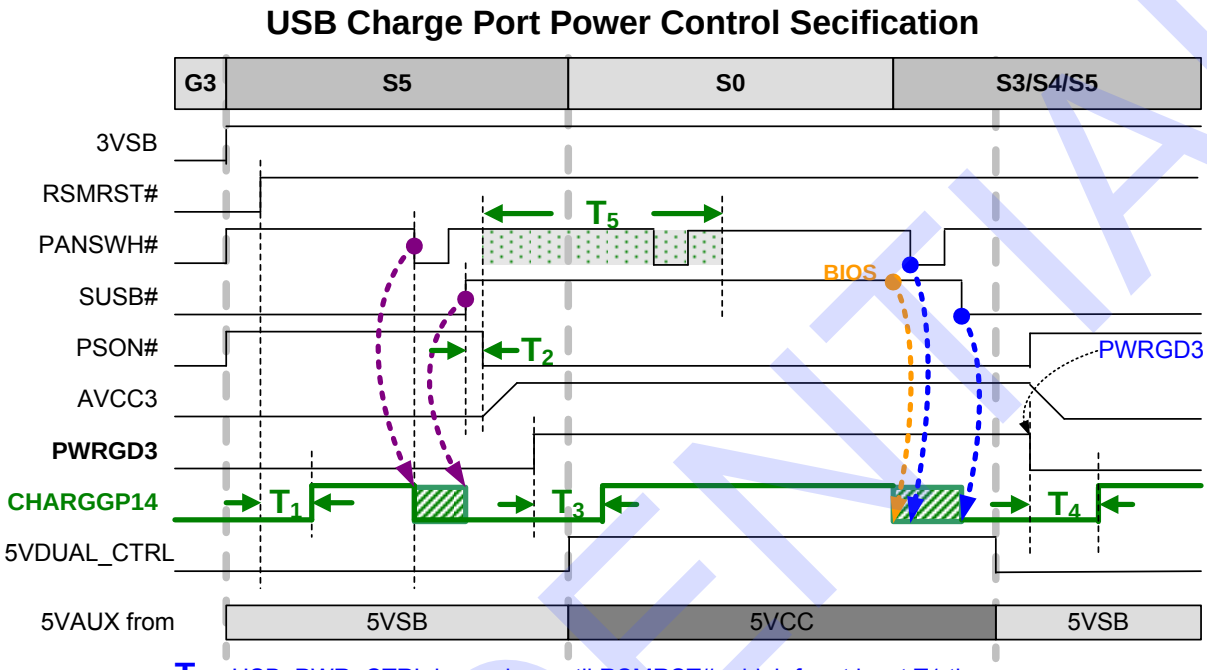

T_1 : USB_PWR_CTRL keeps low until RSMRST# = high for at least T1 time.
T1 time: 0.5s/1s/2s/4s; default 1s; **Register kept by VBAT**

T_2 : SUSB#(SLP_S3#) to PSON# delay time.

T_3 : USB_PWR_CTRL keeps low until ATXPG = high for at least T3 time.
T3 time: 0s/125ms/250ms/500ms; default 125ms

T_4 : USB_PWR_CTRL keeps low time as S0 to S3/S4/S5.
T4 time: 0s/125ms/250ms/500ms; default 125ms

T_5 : PANSWH# Mask Time

CONFIDENTIAL

11.20 DDR4 Power Control Specification

Table 11-4. DDR4Timings Parameter

Symbol	Typ.	Description
T_1	5ms	The rising edge of VPP(2.5V) to rising edge of VDD_EN
T_2	50ms	The falling edge of VDD_EN to rising edge of VPP(2.5V)

Figure11-26. DDR4 Power Control Timings

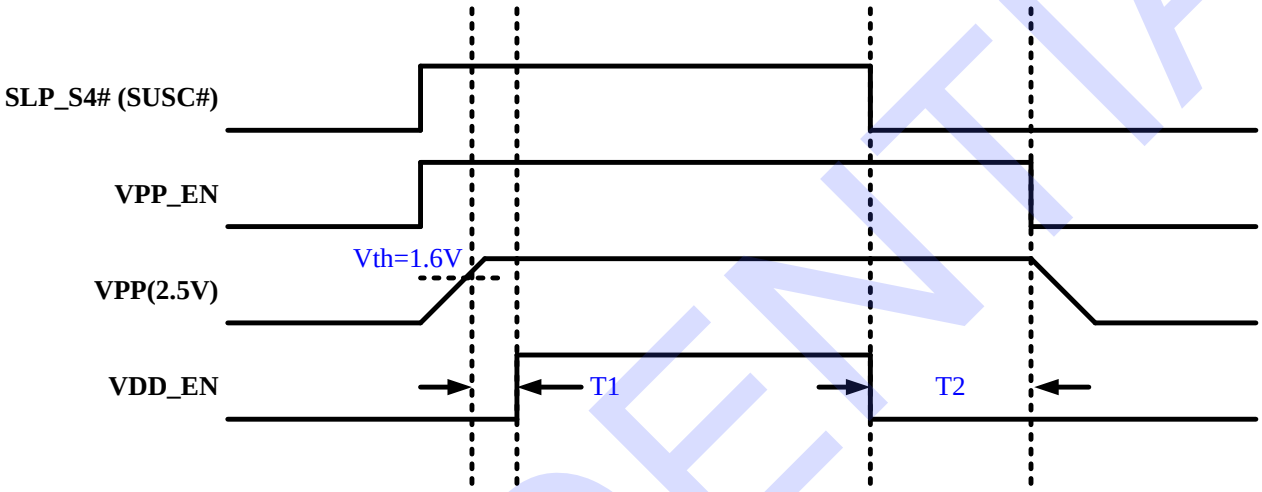

CONFIDENTIAL

11.21 APL Forced Shutdown Timing

Figure 11-27. APL Forced Shutdown Timing

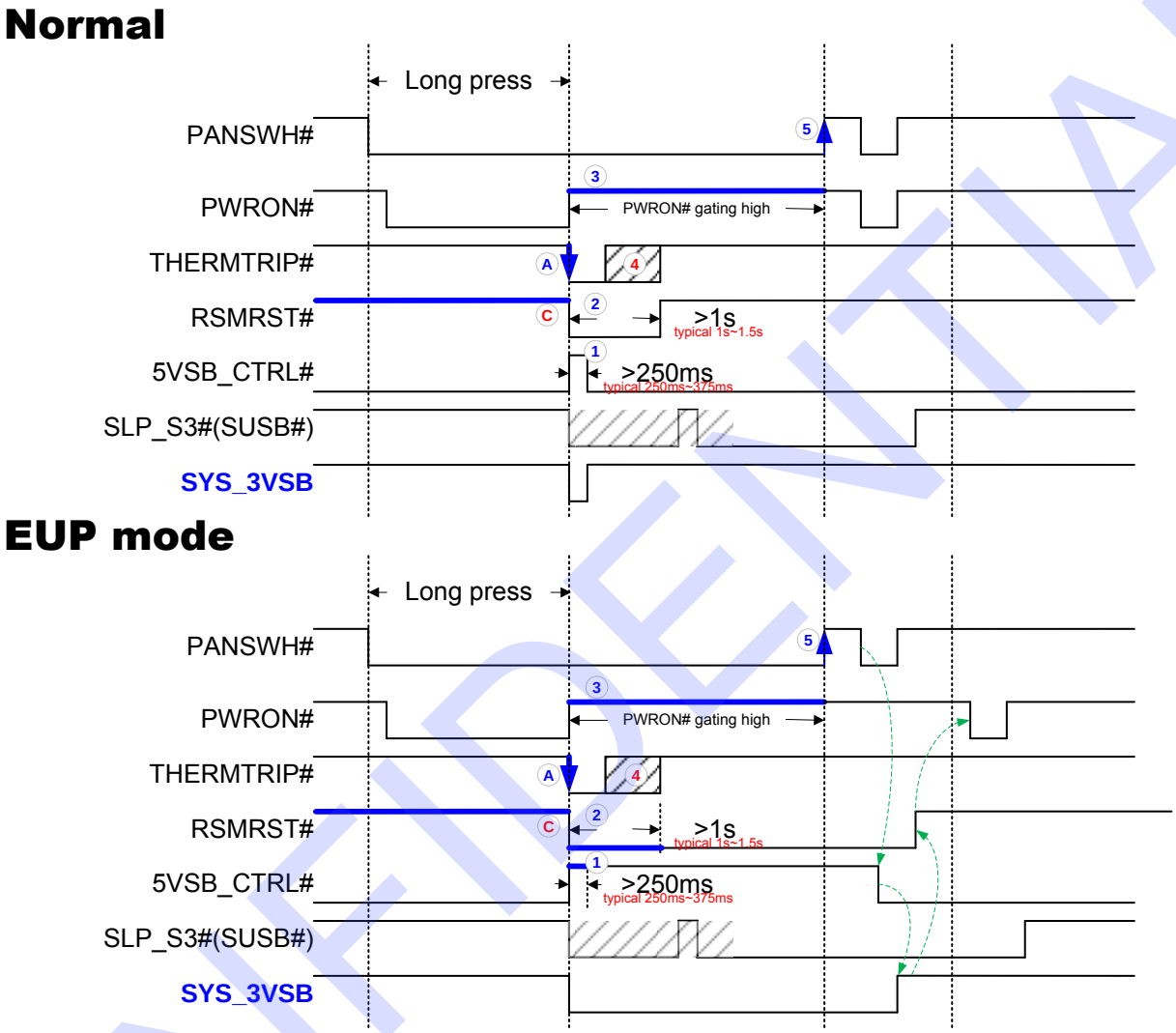

CONFIDENTIAL

11.22 S0ix Sequence Timing

Figure 11-28. S0ix Sequence Timing

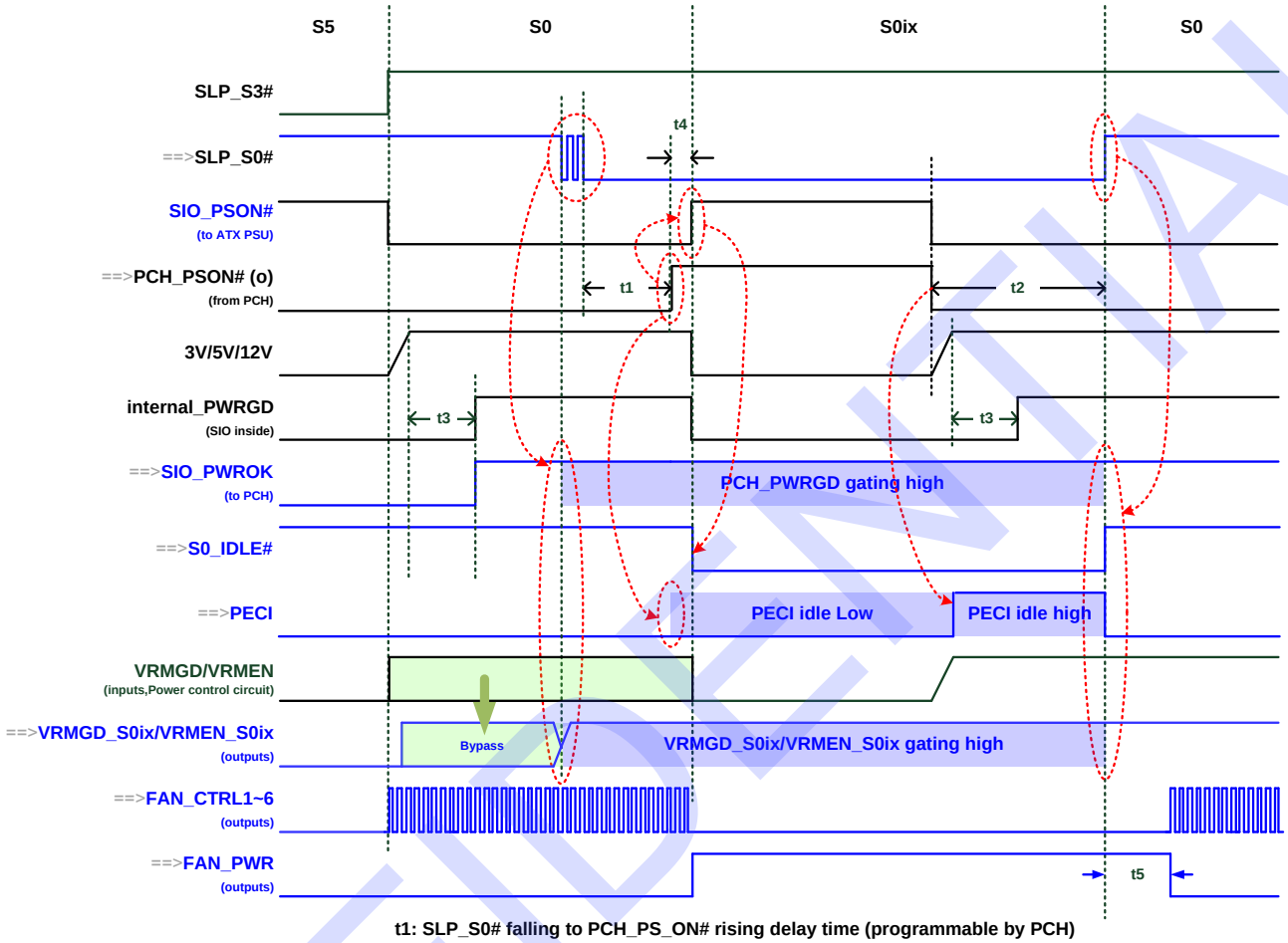

t1: SLP_S0# falling to PCH_PS_ON# rising delay time (programmable by PCH)
t2: PCH_PS_ON# falling to SLP_S0# rising delay time (programmable by PCH)
t3: SIO_PWRGD delay time 150ms
t4: PCH_PSON# to SIO_PSON# delay time < 100us (programmable by SIO)
t5: FAN delay: typical 1~2 second

Note: For the related resigstes, refer to section 8.10.17 bit-7 and 9.7.2.3.5 bit-0 for the detail.

CONFIDENTIAL

CONFIDENTIAL

12. Package Information

LQFP 128(14*14) Outline Dimensions unit: inches/mm

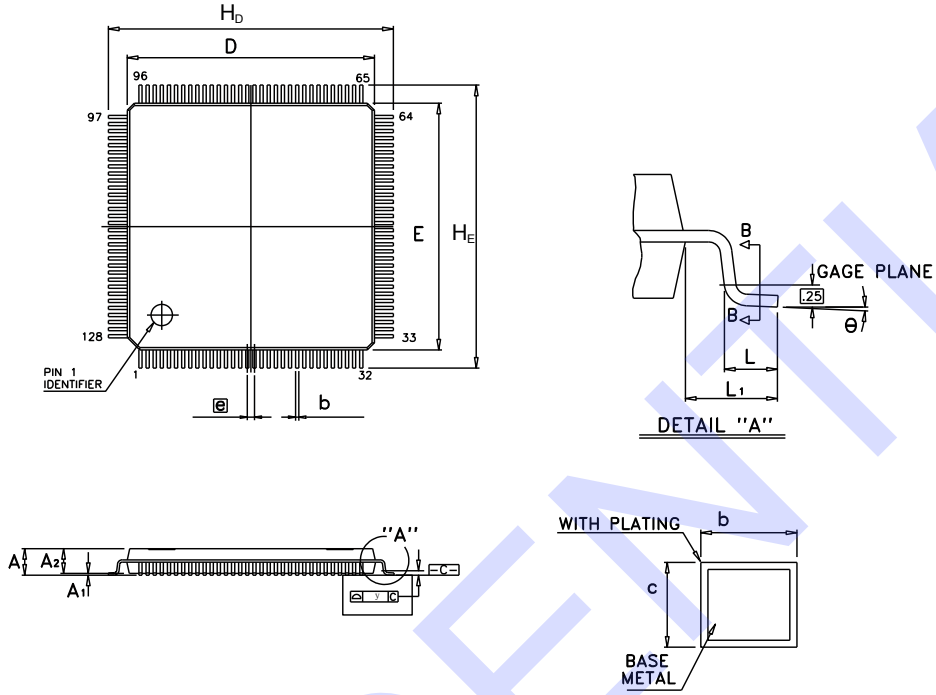

Symbol	Dimensions in inches			Dimensions in mm		
	Min.	Nom.	Max.	Min.	Nom.	Max.
A	-	-	0.063	-	-	1.60
A1	0.002	-	-	0.05	-	-
A2	0.053	0.055	0.057	1.35	1.40	1.45
b	0.005	0.007	0.009	0.13	0.18	0.23
c	0.004	-	0.008	0.09	-	0.20
D	0.547	0.551	0.555	13.90	14.00	14.10
E	0.547	0.551	0.555	13.90	14.00	14.10
e	0.016 BSC			0.40 BSC		
H_D	0.624	0.630	0.636	15.85	16.00	16.15
H_E	0.624	0.630	0.636	15.85	16.00	16.15
L	0.018	0.024	0.030	0.45	0.60	0.75
L_1	0.039 REF			1.00 REF		
y	-	-	0.004	-	-	0.10
θ	0°	3.5°	7°	0°	3.5°	7°

Notes:
1. Dimensions D and E do not include mold protrusion.
2. Dimensions b does not include dambar protrusion.
3. Total in excess of the b dimension at maximum material condition.
4. Dambar cannot be located on the lower radius of the foot.
5. Controlling dimensions: Millimeter
6. Reference document: JEDEC MS-026

DI-LQFP128(14*14)v4

CONFIDENTIAL

This page is intentionally left blank.

CONFIDENTIAL

13. Ordering Information

Part No.	Package
IT8625E/LX	LQFP128

All green components provided are in compliance with RoHS, and Halogen-Free.

CONFIDENTIAL

This page is intentionally left blank.

CONFIDENTIAL

14. Top Marking Information

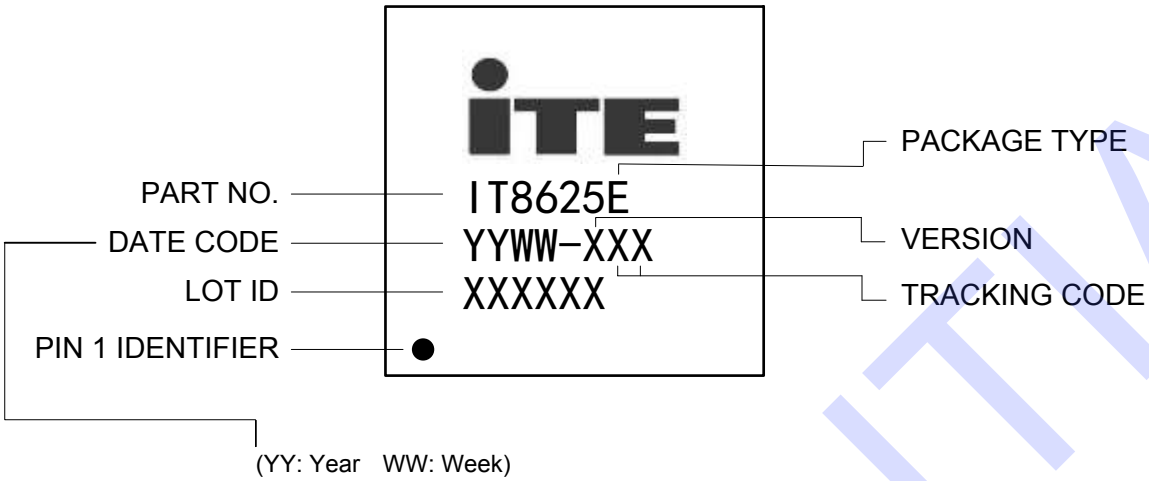

(YY: Year WW: Week)
e.g. YYWW = 1507 → The seventh week of the year 2015

CONFIDENTIAL

ITE TECH. INC. TERMS AND CONDITIONS OF SALE (Rev: 2013)

0. PARTIES

ITE Tech. Inc. ("Seller") is a company headquartered in Taiwan, Republic of China, and incorporated under laws of Republic of China, Buyer is a company or an entity, purchasing product from ITE Tech. Inc.

1. ACCEPTANCE OF TERMS

BUYER ACCEPTS THESE TERMS (i) BY WRITTEN ACCEPTANCE (BY PURCHASE ORDER OR OTHERWISE), OR (ii) BY FAILURE TO RETURN GOODS DESCRIBED ON THE FACE OF THE PACKING LIST WITHIN FIVE DAYS OF THEIR DELIVERY.

2. DELIVERY

(a) Otherwise specified in the order agreed by Seller, delivery will be made Free Carrier (Incoterms), Seller's warehouse, Science-Based Industrial Park, Hsinchu, Taiwan.
(b) Title to the goods and the entire risk will pass to Buyer upon delivery to carrier.
(c) Shipments are subject to availability. Seller shall make every reasonable effort to meet the date(s) quoted or acknowledged; and if Seller makes such effort, Seller will not be liable for any delays.

3. TERMS OF PAYMENT

(a) Terms are as stated on Seller's quotation, or if none are stated, net thirty (30) days. Accounts past due will incur a monthly charge at the rate of one percent (1%) per month (or, if less, the maximum allowed by applicable law) to cover servicing costs.
(b) Seller reserves the right to change credit terms at any time in its sole discretion.

4. LIMITED WARRANTY

(a) Seller warrants that the goods sold will be free from defects in material and workmanship and comply with Seller's applicable published specifications for a period of ninety (90) days from the date of Seller's delivery. Within the warranty period and by obtaining a return number from Seller, Buyer may request replacement or repair for defective goods.
(b) Goods or parts which have been subject to abuse (including without limitation repeated or extended exposure to conditions at or near the limits of applicable absolute ratings) misuse, accident, alteration, neglect, or unauthorized repair or improper application are not covered by any warranty. No warranty is made with respect to custom products or goods produced to Buyer's specifications (unless specifically stated in a writing signed by Seller).
(c) No warranty is made with respect to goods used in devices intended for use in applications where failure to perform when properly used can reasonably be expected to result in significant injury (including, without limitation, navigation, aviation or nuclear equipment, or for surgical implant or to support or sustain life) and Buyer agrees to indemnify, defend, and hold harmless Seller from all claims, damages and liabilities arising out of any such uses.
(d) This Paragraph 4 is the only warranty by Seller with respect to goods and may not be modified or amended except in writing signed by an authorized officer of Seller.
(e) Buyer acknowledges and agrees that it is not relying on any applications, diagrams or circuits contained in any literature, and by its conditions Buyer will test all parts and applications under extended field and laboratory conditions. Notwithstanding any cross-reference or any statements of compatibility, functionality, interchangeability, and the like, the goods may differ from similar goods from other vendors in performance, function or operation, and in areas not contained in the written specifications, or as to ranges and conditions outside such specifications; and Buyer agrees that there are no warranties and that Seller is not responsible for such things.
(f) EXCEPT AS PROVIDED ABOVE, SELLER MAKES NO WARRANTIES OR CONDITIONS, EXPRESS, IMPLIED, OR STATUTORY; AND SELLER EXPRESSLY EXCLUDES AND DISCLAIMS ANY WARRANTY OR CONDITION OF MERCHANTABILITY OR FITNESS FOR PARTICULAR PURPOSE OR APPLICATION.

5. LIMITATION OF LIABILITY

(a) Seller will not be liable for any loss, damage or penalty resulting from causes beyond its reasonable control, including but not limited to delay by others, force majeure, acts of God, or labor conditions. In any such event, the date(s) for Seller's performance will be deemed extended for a period equal to any delay resulting.
(b) THE LIABILITY OF SELLER ARISING OUT OF THE CONTRACT OR ANY GOODS SOLD WILL BE LIMITED TO REFUND OF THE PURCHASE PRICE OR REPLACEMENT OF PURCHASED GOODS (RETURNED TO SELLER FREIGHT PRE-PAID) OR, WITH SELLER'S PRIOR WRITTEN CONSENT, REPAIR OF PURCHASED GOODS.
(c) Buyer will not return any goods without first obtaining a customer return order number.
(d) AS A SEPARATE LIMITATION, IN NO EVENT WILL SELLER BE LIABLE FOR COSTS OF SUBSTITUTE GOODS; FOR ANY SPECIAL, CONSEQUENTIAL, INCIDENTAL OR INDIRECT DAMAGES; OR LOSS OF USE, OPPORTUNITY, MARKET POTENTIAL, AND/OR PROFIT ON ANY THEORY (CONTRACT, TORT, FROM THIRD PARTY CLAIMS OR OTHERWISE). THESE LIMITATIONS SHALL APPLY NOTWITHSTANDING ANY FAILURE OF ESSENTIAL PURPOSE OF ANY REMEDY.

(e) No action against Seller, whether for breach, indemnification, contribution or otherwise, shall be commenced more than one year after the cause of action has accrued, or more than one year after either the Buyer, user or other person knew or with reasonable diligence should have known of the matter or of any claim of dissatisfaction or defect involved; and no such claim may be brought unless Seller has first been given commercially reasonable notice, a full written explanation of all pertinent details, and a good faith opportunity to resolve the matter.
(f) BUYER EXPRESSLY AGREES TO THE LIMITATIONS OF THIS PARAGRAPH 5 AND TO THEIR REASONABLENESS.

6. SUBSTITUTIONS AND MODIFICATIONS

Seller may at any time make substitutions for product ordered which do not materially and adversely affect overall performance with the then current specifications in the typical and intended use. Seller reserves the right to halt deliveries and shipments and alter specifications and prices without notice. Buyer shall verify that the literature and information is current before purchasing.

7. CANCELLATION

The purchase contract may not be canceled by Buyer except with written consent by Seller and Buyer's payment of reasonable cancellation charges (including but not be limited to expenses already incurred for labor and material, overhead, commitments made by Seller, and a reasonable profit).

8. INDEMNIFICATION

Seller will, at its own expense, assist Buyer with technical support and information in connection with any claim that any parts as shipped by Seller under the purchase order infringe any valid and enforceable copyright, or trademark, provided however, that Buyer (i) gives immediate written notice to Seller, (ii) permits Seller to participate and to defend if Seller requests to do so, and (iii) gives Seller all needed information, assistance and authority. However, Seller will not be responsible for infringements resulting from anything not entirely manufactured by Seller, or from any combination with products, equipment, or materials not furnished by Seller. Seller will have no liability with respect to intellectual property matters arising out of products made to Buyer's specifications, code, or designs.

Except as expressly stated in this Paragraph 8 or in another writing signed by an authorized officer, Seller makes no representations and/or warranties with respect to intellectual and/or industrial property and/or with respect to claims of infringement. Except as to claims Seller agrees in writing to defend, BUYER WILL INDEMNIFY, DEFEND AND HOLD HARMLESS SELLER FROM ALL CLAIMS, COSTS, LOSSES, AND DAMAGES (INCLUDING ATTORNEYS FEES) AGAINST AND/OR ARISING OUT OF GOODS SOLD AND/OR SHIPPED HEREUNDER.

9. NO CONFIDENTIAL INFORMATION

Seller shall have no obligation to hold any information in confidence except as provided in a separate non-disclosure agreement signed by both parties.

10. ENTIRE AGREEMENT

(a) These terms and conditions are the entire agreement and the only representations and understandings between Seller and Buyer, and no addition, deletion or modification shall be binding on Seller unless expressly agreed to in written and signed by an officer of Seller.
(b) Buyer is not relying upon any warranty or representation except for those specifically stated here.

11. APPLICABLE LAW

The contract and all performance and disputes arising out of or relating to goods involved will be governed by the laws of R.O.C. (Taiwan, Republic of China), without reference to the U.N. Convention on Contracts for the International Sale of Goods or to conflict of laws principles. Buyer agrees at its sole expense to comply with all applicable laws in connection with the purchase, use or sale of the goods provided hereunder and to indemnify Seller from any failure by Buyer to so comply. Without limiting the foregoing, Buyer certifies that no technical data or direct products thereof will be made available or re-exported, directly or indirectly, to any country to which such export or access is prohibited or restricted under R.O.C. laws or U.S. laws or regulations, unless prior authorization is obtained from the appropriate officials and agencies of the government as required under R.O.C. or U.S. laws or regulations.

12. JURISDICTION AND VENUE

The courts located in Hsinchu, Taiwan, Republic of China, will have the sole and exclusive jurisdiction and venue over any dispute arising out of or relating to the contract or any sale of goods hereunder. Buyer hereby consents to the jurisdiction of such courts.

13. ATTORNEYS' FEES

Reasonable attorneys' fees and costs will be awarded to the prevailing party in the event of litigation involving and/or relating to the enforcement or interpretation of the contract and/or any goods sold under it.

CONFIDENTIAL