聯陽半導體
ITE Tech. Inc.

IT8772E

Environment Control – Low Pin Count Input / Output (EC - LPC I/O)

Preliminary Specification V0.4

(For F Version)

ITE TECH. INC.

CONFIDENTIAL

This specification is subject to Change without notice. It is provided "AS IS" and for reference only. For purchasing information, please contact the nearest ITE TECH sales representatives.
Please note that the IT8772E V0.4 is applicable only to the F version.

CONFIDENTIAL

Copyright © 2012 ITE Tech. Inc.

This is a Preliminary document release. All specifications are subject to change without notice.
The material contained in this document supersedes all previous material issued for the products herein referenced. Please contact ITE Tech. Inc. for the latest document(s).

All sales are subject to ITE's Standard Terms and Conditions, a copy of which is included in the back of this document.

ITE, IT8772E is a trademark of ITE Tech. Inc.
All other trademarks are claimed by their respective owners.
All specifications are subject to change without notice.

Additional copies of this manual or other ITE literature may be obtained from:

ITE Tech. Inc.
Marketing Department
7F, No.233-1, Baociao Rd., Sindian City,
Taipei County 23145, Taiwan, ROC

Phone: (02) 29126889
Fax: (02) 2910-2551, 2910-2552

If you have any marketing or sales questions, please contact:
P.Y. Chang, at ITE Taiwan:
E-mail: p.y.chang@ite.com.tw, Tel: 886-2-29126889 X6052, Fax: 886-2-29102551

You may also find the local sales representative nearest you on the ITE web site.

To find out more about ITE, visit our World Wide Web at:
http://www.ite.com.tw

Or e-mail **itesupport@ite.com.tw** for more product information/services

CONFIDENTIAL

CONFIDENTIAL

Revision History

Section	Revision	Page No.
-	■ Pin36, pin37, and pin 52 updated ■ Chip version updated to "02h" ■ Default of Special Function Selection Register 3 updated to 01h ■ GPIO Set 5, 6 Multi-Function Pin Selection Register (Index=29h, Default=00h) ➢ Bit 7-6 updated ■ Special Function Selection Register 2 (Index=2Bh, Default=0000s000h) ➢ Bit 7-3 updated ■ Environment Controller Special Configuration Register (Index=F3h, Default=00h) ➢ Bit 2-1 updated ■ Special Configuration Register 2 (Index=FBh) ➢ Bit 6-4 updated ■ Watch Dog Timer Configuration Register (Index=72h, Default=001s0000b) ➢ Bit 5 updated ■ Newly added register ➢ Special FAN Control Mode Extra Vector A, B Range Registers (Index=93h, 97h, Default=00h) ■ Applied Voltage updated to -0.3V to 3.6V ■ Energy-using Product (EuP) Power Control Signal Timings ➢ Typ. Of "Delay time of AVCC3 falling edge to 5VSB_CTRL# rising edge." Updated. ■ Power Sequence AC Timing Parameter table updated ■ DSW Timings figure updated ■ DSW Timings Parameter table updated ■ UVP/OVP Detecting Voltage Threshold table updated. ■ Top marking info updated	-

CONFIDENTIAL

CONFIDENTIAL

CONTENTS

1. Features 1
2. General Description 3
3. Block Diagram 5
4. Pin Configuration 7
5. Pin Description 9
6. List of GPIO Pins 19
7. Power On Strapping Options and Special Pin Routings 23
8. Configuration 25
8.1 Configuring Sequence 25
8.2 Configuration Registers 27
8.2.1 Logical Device Base Address 32
8.3 Global Configuration Registers (LDN: All) 33
8.3.1 Configure Control (Index=02h) 33
8.3.2 Logical Device Number (LDN, Index=07h) 33
8.3.3 Chip ID Byte 1 (Index=20h, Default=87h) 33
8.3.4 Chip ID Byte 2 (Index=21h, Default=72h) 33
8.3.5 Chip Version (Index=22h, Default=02h) 33
8.3.6 Clock Selection Register (Index=23h, Default=00h) 33
8.3.7 Special Register (Index=24h, Default=00h) 35
8.3.8 GPIO Set 1 Multi-Function Pin Selection Register (Index=25h, Default=00h) 35
8.3.9 GPIO Set 2 Multi-Function Pin Selection Register (Index=26h, Default=F3h) 35
8.3.10 GPIO Set 3 Multi-Function Pin Selection Register (Index=27h, Default=00h) 36
8.3.11 GPIO Set 4 Multi-Function Pin Selection Register (Index=28h, Default=00h) 36
8.3.12 GPIO Set 5, 6 Multi-Function Pin Selection Register (Index=29h, Default=00h) 37
8.3.13 Special Function Selection Register 1 (Index=2Ah, Default=00h) 37
8.3.14 Special Function Selection Register 2 (Index=2Bh, Default=0000s000h) 38
8.3.15 Special Function Selection Register 3 (Index=2Ch, Default=01h) 38
8.3.16 Test 1 Register (Index=2Eh, Default=00h) 38
8.3.17 Test 2 Register (Index=2Fh, Default=00h) 38
8.4 Serial Port 1 Configuration Registers (LDN=01h) 39
8.4.1 Serial Port 1 Activate (Index=30h, Default=00h) 39
8.4.2 Serial Port 1 Base Address MSB Register (Index=60h, Default=03h) 39
8.4.3 Serial Port 1 Base Address LSB Register (Index=61h, Default=F8h) 39
8.4.4 Serial Port 1 Interrupt Level Select (Index=70h, Default=04h) 39
8.4.5 Serial Port 1 Special Configuration Register 1 (Index=F0h, Default=00h) 39
8.4.6 Serial Port 1 Special Configuration Register 2 (Index=F1h, Default=50h) 39
8.5 Environment Controller Configuration Registers (LDN=04h) 41
8.5.1 Environment Controller Activate (Index=30h, Default=00h) 41
8.5.2 Environment Controller Base Address MSB Register (Index=60h, Default=02h) 41
8.5.3 Environment Controller Base Address LSB Register (Index=61h, Default=90h) 41
8.5.4 PME Direct Access Base Address MSB Register (Index=62h, Default=02h) 41
8.5.5 PME Direct Access Base Address LSB Register (Index=63h, Default=30h) 41
8.5.6 Environment Controller Interrupt Level Select (Index=70h, Default=09h) 41
8.5.7 APC/PME Event Enable Register (PER) (Index=F0h, Default=00h) 42
8.5.8 APC/PME Status Register (PSR) (Index=F1h, Default=00h) 42
8.5.9 APC/PME Control Register 1 (PCR 1) (Index=F2h, Default=00h) 42
8.5.10 Environment Controller Special Configuration Register (Index=F3h, Default=00h) 43
8.5.11 APC/PME Control Register 2 (PCR 2) (Index=F4h, Default=00h) 43
8.5.12 APC/PME Special Code Index Register (Index=F5h) 45

CONFIDENTIAL

8.5.13 APC/PME Special Code Data Register (Index=F6h) 45
8.5.14 Under Voltage Protection/Over Voltage Protection (UVP/OVP) (Index=F9h)....45
8.5.15 Special Configuration Register 1 (Index=FAh)....45
8.5.16 Special Configuration Register 2 (Index=FBh)....45
8.6 KBC(Keyboard) Configuration Registers (LDN=05h) 47
8.6.1 KBC(Keyboard) Activate (Index=30h, Default=01h)....47
8.6.2 KBC(Keyboard) Data Base Address MSB Register (Index=60h, Default=00h)....47
8.6.3 KBC(Keyboard) Data Base Address LSB Register (Index=61h, Default=60h)....47
8.6.4 KBC(Keyboard) Command Base Address MSB Register (Index=62h, Default=00h)....47
8.6.5 KBC(Keyboard) Command Base Address LSB Register (Index=63h, Default=64h)....47
8.6.6 KBC(Keyboard) Interrupt Level Select (Index=70h, Default=01h) 47
8.6.7 KBC(Keyboard) Interrupt Type (Index=71h, Default=02h)....47
8.6.8 KBC(Keyboard) Special Configuration Register (Index=F0h, Default=08h) 48
8.7 KBC(Mouse) Configuration Registers (LDN=06h)....49
8.7.1 KBC(Mouse) Activate (Index=30h, Default=00h) 49
8.7.2 KBC(Mouse) Interrupt Level Select (Index=70h, Default=0Ch)....49
8.7.3 KBC(Mouse) Interrupt Type (Index=71h, Default=02h) 49
8.7.4 KBC(Mouse) Special Configuration Register (Index=F0h, Default=00h)....49
8.8 GPIO Configuration Registers (LDN=07h)....50
8.8.1 SMI# Normal Run Access Base Address MSB Register (Index=60h, Default=00h) 50
8.8.2 SMI# Normal Run Access Base Address LSB Register (Index=61h, Default=00h) 50
8.8.3 Simple I/O Base Address MSB Register (Index=62h, Default=00h)....50
8.8.4 Simple I/O Base Address LSB Register (Index=63h, Default=00h)....50
8.8.5 Panel Button De-bounce Interrupt Level Select Register (Index=70h, Default=00h) 50
8.8.6 Watch Dog Timer Control Register (Index=71h, Default=00h) 50
8.8.7 Watch Dog Timer Configuration Register (Index=72h, Default=001s0000b) 51
8.8.8 Watch Dog Timer Time-out Value (LSB) Register (Index=73h, Default=38h) 51
8.8.9 Watch Dog Timer Time-out Value (MSB) Register (Index=74h, Default=00h) 51
8.8.10 GPIO Pin Set 1, 2, 3, 4, and 5 Polarity Registers (Index=B0h, B1h, B2h, B3h and B4h, Default=00h) 51
8.8.11 GPIO Pin Set 1, 2, 3, 4, 5 and 6 Pin Internal Pull-up Enable Registers (Index=B8h, B9h, BAh, BBh, BCh, and BDh, Default=20h, 00h, 00h, 00h, 00h, and 00h)....51
8.8.12 Simple I/O Set 1, 2, 3, 4 and 5 Enable Registers (Index=C0h, C1h, C2h, C3h and C4h, Default=01h, 00h, 00h, 00h, and 00h)....53
8.8.13 Simple I/O Set 1, 2, 3, 4, 5 and 6 Output Enable Registers (Index=C8h, C9h, CAh, CBh, CCh, and CDh, Default=01h, 00h, 00h, 40h, 00h and 00h) 53
8.8.14 Panel Button De-bounce 0 Input Pin Mapping Register (Index=E0h, Default=00h)....53
8.8.15 Panel Button De-bounce 1 Input Pin Mapping Register (Index=E1h, Default=00h)....53
8.8.16 IRQ External Routing 1-0 Input Pin Mapping Registers (Index=E3h-E2h, Default=00h)....53
8.8.17 IRQ External Routing 1-0 Interrupt Level Selection Registers (Index=E4h, Default=00h) ..53
8.8.18 SMI# Control Register 1 (Index=F0h, Default=00h)....55
8.8.19 SMI# Control Register 2 (Index=F1h, Default=00h)....55
8.8.20 SMI# Status Register 1 (Index=F2h, Default=00h) 55
8.8.21 SMI# Status Register 2 (Index=F3h, Default=00h) 55
8.8.22 SMI# Pin Mapping Register (Index=F4h, Default=00h) 57
8.8.23 Hardware Monitor Thermal Output Pin Mapping Register (Index=F5h, Default=00h)....57
8.8.24 Hardware Monitor Alert Beep Pin Mapping Register (Index=F6h, Default=00h) 57
8.8.25 Keyboard Lock Pin Mapping Register (Index=F7h, Default=00h)....57
8.8.26 GP LED Blinking 1 Pin Mapping Register (Index=F8h, Default=00h)....57
8.8.27 GP LED Blinking 1 Control Register (Index=F9h, Default=00h) 57
8.8.28 GP LED Blinking 2 Pin Mapping Register (Index=FAh, Default=00h)....58
8.8.29 GP LED Blinking 2 Control Register (Index=FBh, Default=00h)....58
8.9 Consumer IR Configuration Registers (LDN=0Ah)....59

CONFIDENTIAL

8.9.1 Consumer IR Activate (Index=30h, Default=00h) 59
8.9.2 Consumer IR Base Address MSB Register (Index=60h, Default=03h) 59
8.9.3 Consumer IR Base Address LSB Register (Index=61h, Default=10h) 59
8.9.4 Consumer IR Interrupt Level Select (Index=70h, Default=0Bh) 59
8.9.5 Consumer IR Special Configuration Register (Index=F0h, Default=06h) 59
9. Functional Description 61
9.1 LPC Interface 61
9.1.1 LPC Transactions 61
9.2 Serialized IRQ 62
9.2.1 Continuous Mode 62
9.2.2 Quiet Mode 62
9.2.3 Waveform Samples of SERIRQ Sequence 62
9.2.4 SERIRQ Sampling Slot 63
9.3 General Purpose I/O 64
9.4 Advanced Power Supply Control and Power Management Event (PME#) 67
9.5 Environment Controller 68
9.5.1 Interface 68
9.5.2 Registers 68
9.5.2.1 Address Port (Base+05h, Default=00h) 68
9.5.2.2 Register Description 73
9.5.2.2.1 Configuration Register (Index=00h, Default=18h) 73
9.5.2.2.2 Interrupt Status Register 1 (Index=01h, Default=00h) 73
9.5.2.2.3 Interrupt Status Register 2 (Index=02h, Default=00h) 73
9.5.2.2.4 Interrupt Status Register 3 (Index=03h, Default=00h) 74
9.5.2.2.5 SMI# Mask Register 1 (Index=04h, Default=00h) 74
9.5.2.2.6 SMI# Mask Register 2 (Index=05h, Default=00h) 74
9.5.2.2.7 SMI# Mask Register 3 (Index=06h, Default=00h) 74
9.5.2.2.8 Interrupt Mask Register 1 (Index=07h, Default=00h) 74
9.5.2.2.9 Interrupt Mask Register 2 (Index=08h, Default=00h) 74
9.5.2.2.10 Interrupt Mask Register 3 (Index=09h, Default=80h) 74
9.5.2.2.11 Interface Selection Register (Index=0Ah, Default=48h) 75
9.5.2.2.12 Fan PWM Smoothing Step Frequency Selection Register (Index=0Bh, Default=0Fh) 75
9.5.2.2.13 Fan Tachometer Control Register (Index=0Ch, Default=00h) 75
9.5.2.2.14 Fan Tachometer 2-3 Reading Registers (Index=0Eh-0Fh) 77
9.5.2.2.15 Fan Tachometer 2-3 Limit Registers (Index=11h-12h) 77
9.5.2.2.16 Fan Controller Main Control Register (Index=13h, Default=07h) 77
9.5.2.2.17 FAN_CTL Control Register (Index=14h, Default=40h) 77
9.5.2.2.18 FAN_CTL 2-3 PWM Control Register (Index=16h,17h, Default=00h) 79
9.5.2.2.19 Fan Tachometer 2-3 Extended Reading Registers (Index=19h-1Ah) 79
9.5.2.2.20 Fan Tachometer 2-3 Extended Limit Registers (Index=1Ch-1Dh) ... 79
9.5.2.2.21 VIN5-0 Voltage Reading Registers (Index=25h-20h) 79
9.5.2.2.22 3VSB Voltage Reading Registers (Index=27h) 79
9.5.2.2.23 VBAT Voltage Reading Register (Index=28h) 80
9.5.2.2.24 TMPIN3-1 Temperature Reading Registers (Index=2Bh-29h) 80
9.5.2.2.25 VIN7-0 High Limit Registers (Index=3Eh, 3Ch, 3Ah, 38h, 36h, 34h, 32h, 30h) 80
9.5.2.2.26 VIN7-0 Low Limit Registers (Index=3Fh, 3Dh, 3Bh, 39h, 37h, 35h, 33h, 31h) 80
9.5.2.2.27 TMPIN3-1 High Limit Registers (Index=44h, 42h, 40h) 80
9.5.2.2.28 TMPIN3-1 Low Limit Registers (Index=45h, 43h, 41h) 80
9.5.2.2.29 ADC Voltage Channel Enable Register (Index=50h, Default=00h) . 80
9.5.2.2.30 ADC Temperature Channel Enable Register (Index=51h, Default=00h)

CONFIDENTIAL

81
9.5.2.2.31 TMPIN2-1 Thermal Output Limit Registers (Index=53h-52h, Default=7Fh) 81
9.5.2.2.32 ADC Temperature Extra Channel Enable Register (Index=55h, Default=40h) 81
9.5.2.2.33 Thermal Diode Zero Degree Adjust 3-2 Registers (Index=59h, 57h, Default=00h) 81
9.5.2.2.34 Vendor ID Register (Index=58h, Default=90h).....81
9.5.2.2.35 Code ID Register (Index=5Bh, Default=12h) 82
9.5.2.2.36 Beep Event Enable Register (Index=5Ch, Default=60h) 82
9.5.2.2.37 Beep Frequency Divisor of Fan Event Register (Index=5Dh, Default=00h) 82
9.5.2.2.38 Beep Frequency Divisor of Voltage Event Register (Index=5Eh, Default=00h) 82
9.5.2.2.39 Beep Frequency Divisor of Temperature Event Register (Index=5Fh, Default=00h) 82
9.5.2.2.40 FAN_CTL3-2 SmartGuardian Automatic Mode Temperature Limit of OFF Registers (Index=70h, 68h, Default=7Fh).....83
9.5.2.2.41 FAN_CTL3-2 SmartGuardian Automatic Mode Temperature Limit of Fan Start Registers (Index=71h, 69h, Default=7Fh).....84
9.5.2.2.42 FAN_CTL3-2 SmartGuardian Automatic Mode Temperature Limit of Full Speed Registers (Index=72h, 6Ah, Default=7Fh).....84
9.5.2.2.43 FAN_CTL3-2 SmartGuardian Automatic Mode Start PWM Registers (Index=73h, 6Bh, Default=00h/80h).....84
9.5.2.2.44 FAN_CTL3-2 SmartGuardian Automatic Mode Control Registers (Index=74h, 6Ch, Default=00h).....84
9.5.2.2.45 FAN_CTL3-2 SmartGuardian Automatic Mode △-Temperature Registers (Index=75h, 6Dh, Default=00h).....85
9.5.2.2.46 FAN_CTL3-2 Target Zone Registers (Index=76h, 6Eh, Default=0Fh)85
9.5.2.2.47 External Temperature Sensor Host Status Register (Index=88h, Default= -00h) 85
9.5.2.2.48 External Temperature Sensor Host Target Address Register (Index=89h, Default=00h) 86
9.5.2.2.49 External Temperature Sensor Host Write Length Register (Index=8Ah, Default=00h) 86
9.5.2.2.50 External Temperature Sensor Host Read Length Register (Index=8Bh, Default=00h) 86
9.5.2.2.51 External Temperature Sensor Host Command (Write Data 1) Register 86
(Index=8Ch, Default=00h).....86
9.5.2.2.52 External Temperature Sensor Write Data (2-8) Register (Index=8Dh, Default=--h) 86
9.5.2.2.53 External Temperature Sensor Host Control Register (Index=8Eh, Default=02h) 86
9.5.2.2.54 External Temperature Sensor Read Data (1-16) Register (Index=8Fh, Default=--h) 87
9.5.2.2.55 Special FAN Control Mode Extra Vector A, B Temperature Limit of Fan Start Registers (Index=90h, 94h, Default=FFh).....87
9.5.2.2.56 Special FAN Control Mode Extra Vector A, B Slope Registers (Index=91h, 95h, Default=00h) 87
9.5.2.2.57 Special FAN Control Mode Extra Vector A, B △-Temperature Registers (Index=92h, 96h, Default=00h) 89
9.5.2.2.58 Special FAN Control Mode Extra Vector A, B Range Registers

CONFIDENTIAL

(Index=93h, 97h, Default=00h) 89
9.5.2.2.59 PCH/AMDTSI Host Status Register (Index=98h, Default=40h) 89
9.5.2.2.60 PCH/AMDTSI Host Target Address Register (Index=99h, Default=00h) 91
9.5.2.2.61 PCH/AMDTSI Host Command Register (Index=9Ch, Default=00h) 91
9.5.2.2.62 PCH/AMDTSI Write Data Register (Index=9Dh, Default=--h) 91
9.5.2.2.63 PCH/AMDTSI Host Control Register (Index=9Eh, Default=02h) 91
9.5.2.2.64 PCH/AMDTSI Read Data (1-16) Register (Index=9Fh, Default=--h) 92
9.5.3 Operation 92
9.5.3.1 Power on Reset and Software Reset 92
9.5.3.2 Starting Conversion 93
9.5.3.3 Voltage and Temperature Inputs 94
9.5.3.4 Layout and Grounding 94
9.5.3.5 Fan Tachometer 95
9.5.3.6 Interrupt of the EC 95
9.5.3.7 FAN Controller FAN_CTL's ON-OFF and SmartGuardian Modes 97
9.5.3.8 External Thermal Sensor Programming Procedure 98
9.6 Serial Port (UART) 107
9.6.1 Data Register 107
9.6.1.1 Receiver Buffer Register (RBR) (Read only, Address offset=0, DLAB=0) 107
9.6.1.2 Transmitter Buffer Register (TBR) (Write only, Address offset=0, DLAB=0) 107
9.6.2 Control Register 108
9.6.2.1 Interrupt Enable Register (IER) (Read/Write, Address offset=1, DLAB=0) 108
9.6.2.2 Interrupt Identification Register (IIR) (Read only, Address offset=2) 108
9.6.2.3 FIFO Control Register (FCR) (Write Only, Address offset=2) 110
9.6.2.4 Divisor Latches (DLL, DLM) (Read/Write, Address offset=0,1 DLAB=0) 110
9.6.2.5 Baud Rate Generator (BRG) 110
9.6.2.6 Scratch Pad Register (Read/Write, Address offset=7) 111
9.6.2.7 Line Control Register (LCR) (Read/Write, Address offset=3) 112
9.6.2.8 Modem Control Register (MCR) (Read/Write, Address offset=4) 113
9.6.3 Status Registers 113
9.6.3.1 Line Status Register (LSR) (Read/Write, Address offset=5) 113
9.6.3.2 Modem Status Register (MSR) (Read/Write, Address offset=6) 114
9.6.4 Reset 116
9.6.5 Programming 116
9.6.6 Software Reset 116
9.6.7 Clock Input Operation 116
9.6.8 FIFO Interrupt Mode Operation 116
9.7 Keyboard Controller (KBC) 119
9.7.1 Host Interface 119
9.7.2 Data Registers and Status Register 121
9.7.3 Keyboard and Mouse Interface 121
9.7.4 KIRQ and MIRQ 121
9.8 Consumer Remote Control (TV Remote) IR (CIR) 122
9.8.1 Overview 122
9.8.2 Features 122
9.8.3 Block Diagram 122
9.8.4 Transmit Operation 124
9.8.5 Receive Operation 124
9.8.6 Register Description and Address 124
9.8.6.1 CIR Data Register (DR) 125
9.8.6.2 CIR Interrupt Enable Register (IER) 125
9.8.6.3 CIR Receiver Control Register (RCR) 127
9.8.6.4 CIR Transmitter Control Register 1 (TCR1) 128

CONFIDENTIAL

9.8.6.5 CIR Transmitter Control Register (TCR2) 129
9.8.6.6 CIR Transmitter Status Register (TSR) 132
9.8.6.7 CIR Receiver FIFO Status Register (RSR) 132
9.8.6.8 CIR Baud Rate Divisor Low Byte Register (BDLR) 132
9.8.6.9 CIR Baud Rate Divisor High Byte Register (BDHR) 133
9.8.6.10 CIR Interrupt Identification Register (IIR) 133
10. DC Electrical Characteristics 135
11. AC Characteristics 139
11.1 Clock Input Timings 139
11.2 LCLK (PCICLK) and LRESET Timings 140
11.3 LPC and SERIRQ Timings 141
11.4 Serial Port, ASKIR, SIR and Consumer Remote Control Timings 142
11.5 Modem Control Timings 143
11.6 Keyboard/Mouse Receive/Send Data Timings 144
11.7 RSMRST# and ACPI Power Control Signal Timings 145
11.8 PWRGD1, PWRGD2, PWRGD3 Signal Timings 147
11.9 Energy-using Product (EuP) Power Control Signal Timings 149
11.10 5VAUX_SW Power Control Signal Timings 150
11.11 AMD K8 Power Sequence 151
11.12 DSW Timings 152
11.13 UVP/OVP Timings 153
11.13.1 Notice Mode 153
12. Package Information 155
13. Ordering Information 157
14. Top Marking Information 159

FIGURES

Figure 3-1. Block Diagram 5
Figure 4-1. IT8772E 64-LQFP 7
Figure 7-1. IT8772E Special Applications Circuitry for Intel ICH 24
Figure 7-2. IT8772E DSW Applications Circuitry for Intel CPT/PCH 24
Figure 9-1. Start Frame Timing 62
Figure 9-2. Stop Frame Timing 62
Figure 9-3. General Logic of GPIO Function 66
Figure 9-4. Application Example 93
Figure 9-5. Temperature Interrupt Response Diagram 96
Figure 9-6. SmartGuardian Automatic Mode 97
Figure 9-7. PECI Programming Procedure 98
Figure 9-8. SST Host Programming Procedure 100
Figure 9-9. SST Slave Programming Procedure 102
Figure 9-10. SMBus Host Programming Procedure 103
Figure 9-11. AMDTSI Host Programming Procedure 104
Figure 9-12. PCH SM-Link Programming Procedure 105
Figure 9-13. Keyboard and Mouse Interface 119
Figure 9-14. CIR Block Diagram 122

CONFIDENTIAL

Figure 11-1. Clock Input Timings....139
Figure 11-2. LCLK (PCICLK) and LRESET Timings....140
Figure 11-3. LPC and SERIRQ Timings....141
Figure 11-4. Serial Port, ASKIR, SIR and Consumer Remote Control Timings....142
Figure 11-5. Modem Control Timings....143
Figure 11-6. Keyboard/Mouse Receive/Send Data Timings....144
Figure 11-7. RSMRST# Timings....145
Figure 11-8. PWRGD3 Timings....145
Figure 11-9. ACPI Power Signal Timings....145
Figure 11-10. PWRGD1/2/3 Signal Condition....147
Figure 11-11. PWRGD1/2/3 Signal Timings....148
Figure 11-12. EuP Function Signal Timings....149
Figure 11-13. 5VAUX_SW Signal Timings....150
Figure 11-14. AMD K8 Power Sequence Timings....151
Figure 11-15. DPWORK Timings....152
Figure 11-16. DSW Timings....152
Figure 11-17. UVP/OVP Application....153
Figure 11-18. UVP/OVP Force Mode Timings....153

TABLES

Table 4-1. Pins Listed in Numeric Order....8
Table 5-1. Pin Description of Supplies Signals....9
Table 5-2. Pin Description of LPC Bus Interface Signals....9
Table 5-3. Pin Description of Hardware Monitor Signals....10
Table 5-4. Pin Description of Serial Port 1 Signals....11
Table 5-5. Pin Description of Keyboard Controller Signals....13
Table 5-6. Pin Description of Power Control Signals....14
Table 5-7. Pin Description of Miscellaneous Signals....16
Table 6-1. GPIO Alternate Function....19
Table 6-2. GPIO Registers and Power Pads Table....21
Table 7-1. Power On Strapping Options....23
Table 8-1. Global Configuration Registers....27
Table 8-2. Serial Port 1 Configuration Registers....27
Table 8-3. Environment Controller Configuration Registers....29
Table 8-4. KBC(Keyboard) Configuration Registers....29
Table 8-5. KBC(Mouse) Configuration Registers....29
Table 8-6. GPIO Configuration Registers....30
Table 8-7. Consumer IR Configuration Registers....31
Table 8-8. Base Address of Logical Devices....32
Table 8-9 Interrupt Level Mapping Table....59

CONFIDENTIAL

Table 8-10 Location Mapping Table 60
Table 9-1. Address Map on LPC Bus 68
Table 9-2. Environment Controller Registers 69
Table 9-3. Serial Channel Registers 107
Table 9-4. Interrupt Identification Register 109
Table 9-5. Receiver FIFO Trigger Level Encoding 110
Table 9-6. Baud Rate Using (24 MHz ÷ 13) Clock 111
Table 9-7. Stop Bit Number Encoding 112
Table 9-8. Reset Control of Register and Pinout Signal 116
Table 9-9. Data Register READ/WRITE Controls 119
Table 9-10. Status Register 121
Table 9-11. CIR Register 124
Table 9-12. Modulation Carrier Frequency 130
Table 9-13. Receiver Demodulation Low Frequency (HCFS = 0) 131
Table 9-14. Receiver Demodulation High Frequency (HCFS = 1) 132
Table 11-1. Power Sequence AC Timing Parameter 151
Table 11-2. DSW Timings Parameter 152
Table 11-3. UVP/OVP Timings Parameter 153
Table 11-4. UVP/OVP Detecting Voltage Threshold 153

CONFIDENTIAL

1. Features

- **Low Pin Count Interface**
  - Complies with Intel Low Pin Count Interface Specification Rev. 1.1
  - Supports LDRQ#, SERIRQ protocols
  - Supports PCI PME# Interfaces

- **ACPI & LANDesk Compliant**
  - ACPI V. 2.0 compliant
  - Register sets compatible with "Plug and Play ISA Specification V. 1.0a"
  - LANDesk 3.X compliant
  - Supports 5 logical devices

- **Enhanced Hardware Monitor**
  - Built-in 8-bit Analog to Digital Converter
  - 2 thermal inputs from either remote thermal resistor or thermal diode or diode-connected transistor, the temperature sensor of the current mode
  - 8 voltage monitor inputs (3VSB、AVCC3 and VBAT measured internally)
  - 1 chassis open detection input with low power Flip-Flop dual-powered by battery or 3VSB
  - Watch Dog comparison of all monitored values
  - SST/PECI/AMDTSI/PCH SM-Link I/F supporting external temperature reading for fan control

- **Fan Speed Controller**
  - Provides fan on-off and PWM control
  - Supports 2 programmable Pulse Width Modulation (PWM) mode or close-loop (RPM) mode outputs
  - 256 steps of PWM mode
  - Monitors 2 fan tachometer inputs

- **SmartGuardian Controller**
  - Provides programmably automatic fan speed control
  - Supports mix-and-match for temperature inputs and fan speed control outputs
  - Overrides fan speed controller during catastrophic situations
  - Provides audible over temperature warning

- **One 16C550 UART**
  - Supports one standard Serial Port

- **Consumer Remote Control (TV remote) IR with Power-up Feature**
  - Supports CIR Receive Ports

- **Keyboard Controller**
  - 8042 compatible with PS/2 keyboard and mouse
  - Hardware KBC
  - GateA20 and Keyboard reset output
  - Supports Multiple keyboard power-on events (Any Keys, 2-5 Sequential Keys, 1-3 simultaneous Keys)
  - Supports mouse double-click and/or mouse move power on events

- **27 General Purpose I/O Pins**
  - Input mode supports either switch de-bounce or programmable external IRQ input routing
  - Output mode supports 2 sets of programmable LED blinking periods

- **Watch Dog Timer**
  - Time resolution 1 minute or 1 second, maximum 65535 minutes or 65535 seconds
  - Output to KRST# and PWRGD when expired

- **Under Voltage Protection/Over Voltage (UVP/ OVP)**
  - Supports notice type

- **ITE's Innovative Automatic Power-failure Resume and Power Button De-bounce**

- **Eco-design of Energy-using Product (EuP), Extra Low Power S5 Control**

- **Intel DSW Support**

- **AMD CPU Power Sequence Controller**
  - Built-in enhanced voltage comparator

- **Built-in 32.768 kHz Oscillator**

- **Single 24/48 MHz Clock Input**

- **3VSB and VBAT Supported**

- **+3.3V Power Supply**

- **64-Pin LQFP**

- **RoHS Compliant (100% Green Available)**

CONFIDENTIAL

This page is intentionally left blank.

CONFIDENTIAL

2. General Description

The IT8772E is a highly integrated Super I/O using the Low Pin Count Interface. It provides the most commonly used legacy Super I/O functionality plus the latest Environment Control initiatives, including H/W Monitor and Fan Speed Controller. The device's LPC interface complies with Intel "LPC Interface Specification Rev. 1.1". The IT8772E is ACPI & LANDesk compliant.

The IT8772E features an enhanced hardware monitor providing two thermal inputs from remote thermal resistors, or thermal diode or diode-connected transistor (2N3904/2N3906). The device employs ITE's innovative intelligent automatic Fan ON/OFF & speed control functions (SmartGuardian) to protect the system while reducing the system noise and power consumption. The Fan Speed Controller can control up to two fan speeds through two separate 256 steps of Pulse Width Modulation (PWM) output or RPM output pins and monitor up to two fan tachometer inputs.

In addition, it features one 16C550 standard compatible enhanced UART performing asynchronous communication, one integrated Keyboard Controller, six GPIO ports controlling up to 27 GPIO pins, which can be individually enabled or disabled via software configuration registers, and IR interface supported.

Regarding eco-design of Energy-using Product (EuP), IT8772E provides not only a solution to reducing power consumption in S5 State but also Keyboard, Mouse, RI# and CIR wakeup events in S3/S5 State.

The IT8772E utilizes power-saving circuitry to reduce power consumption, and once a logical device is disabled, the inputs are inhibited with the clock disabled and the outputs are tri-stated. The device requires a single 24/48 MHz clock input and operates with +3.3V power supply. The IT8772E is available in 64-pin LQFP.

CONFIDENTIAL

This page is intentionally left blank.

CONFIDENTIAL

3. Block Diagram

Figure 3-1. Block Diagram

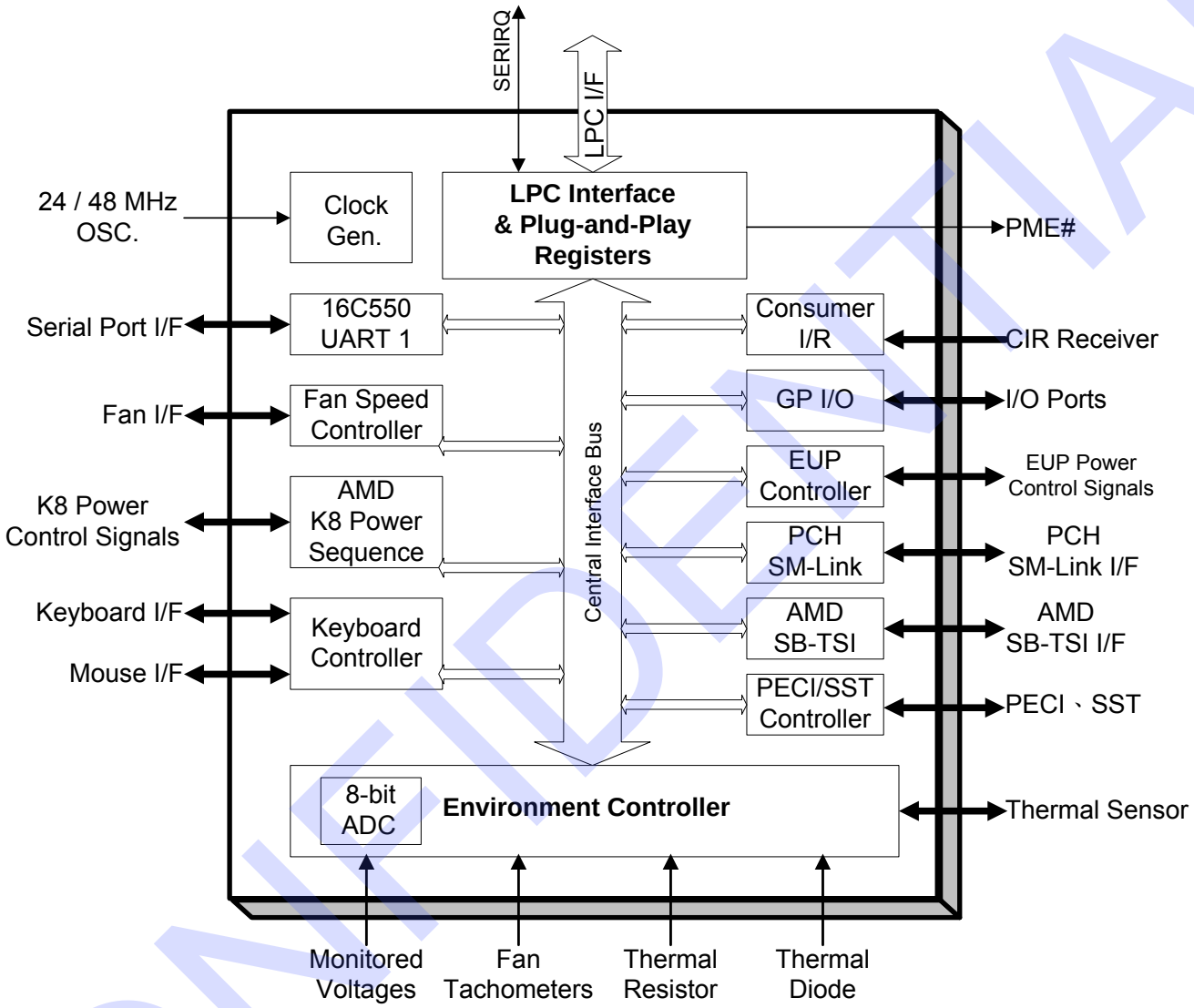

CONFIDENTIAL

This page is intentionally left blank.

CONFIDENTIAL

4. Pin Configuration

Figure 4-1. IT8772E 64-LQFP

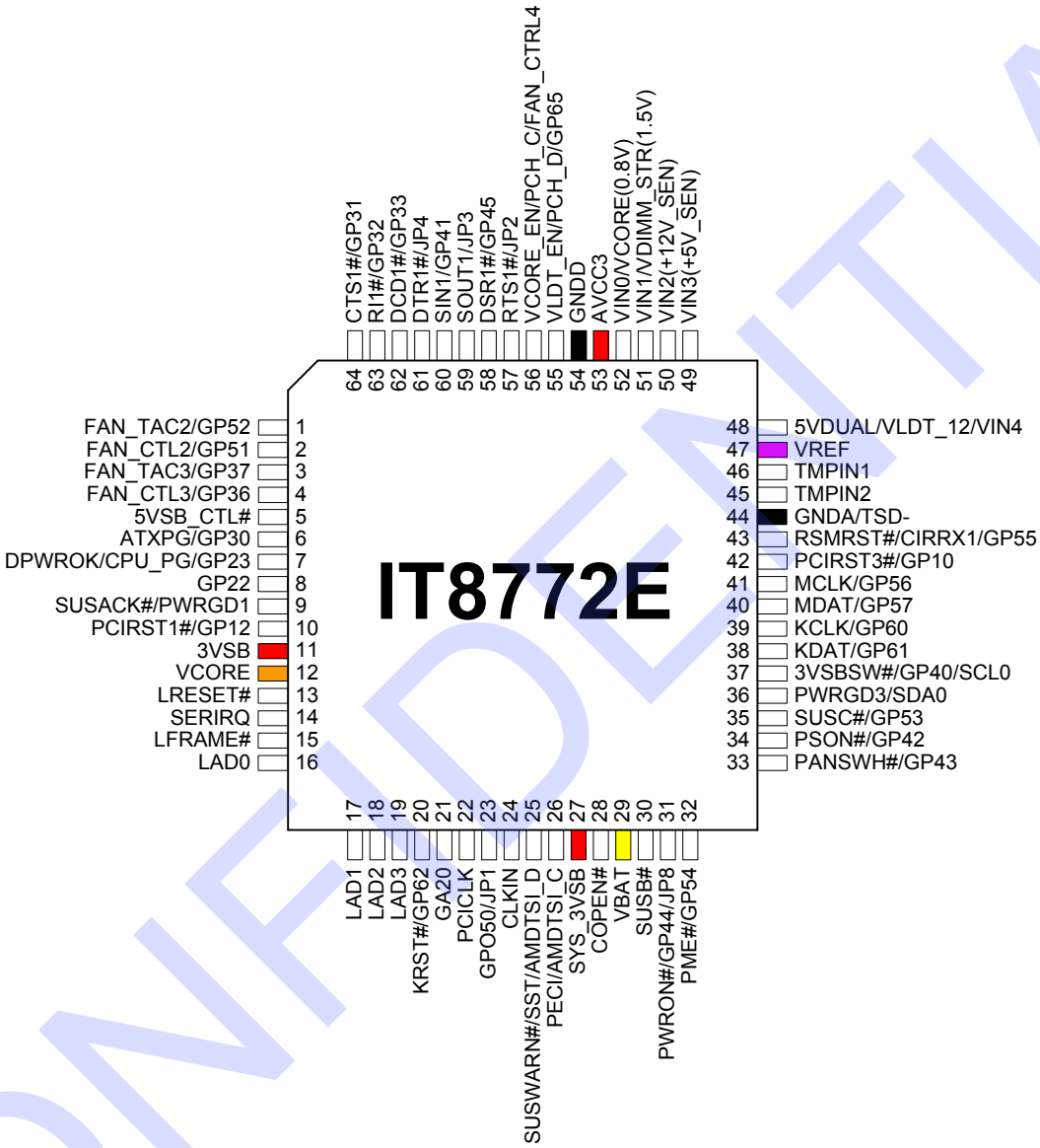

CONFIDENTIAL

Table 4-1. Pins Listed in Numeric Order

Pin	Signal	Pin	Signal	Pin	Signal	Pin	Signal
1	FAN_TAC2/GP52	17	LAD1	33	PANSWH#/GP43	49	VIN3(+5V_SEN)
2	FAN_CTL2/GP51	18	LAD2	34	PSON#/GP42	50	VIN2(+12_SEN)
3	FAN_TAC3/GP37	19	LAD3	35	SUSC#/GP53	51	VIN1/ VIDMM_STR(1.5V)
4	FAN_CTL3/GP36	20	KRST#/GP62	36	PWRGD3/SDA0	52	VIN0/ VCORE(0.8V)
5	5VSB_CTRL#	21	GA20	37	3VSBSW#/GP40/ SCL0	53	AVCC3
6	ATXPG/GP30	22	PCICLK	38	KDAT/GP61	54	GNDD
7	DPWROK/CPU_PG/ GP23	23	GPO50/JP1	39	KCLK/GP60	55	VLDT_EN/ PCH_D/GP65
8	GP22	24	CLKIN	40	MDAT/GP57	56	VCORE_EN/ PCH_C/FAN_CTL4
9	SUSACK#/ PWRGD1	25	SUSWARN#/SST/ AMDTSI_D	41	MCLK/GP56	57	RTS1#/JP2
10	PCIRST1#/GP12	26	PECI/AMDTSI_C	42	PCIRST3#/GP10	58	DSR1#/GP45
11	3VSB	27	SYS_3VSB	43	RSMRST#/CIRRX1/ GP55	59	SOUT1/JP3
12	VCORE	28	COPEN#	44	GNDA/TSD-	60	SIN1/GP41
13	LRESET#	29	VBAT	45	TMPIN2	61	DTR1#/JP4
14	SERIRQ	30	SUSB#	46	TMPIN1	62	DCD1#/GP33
15	LFRAME#	31	PWRON#/GP44/JP8	47	VREF	63	RI1#/GP32
16	LAD0	32	PME#/GP54	48	5VDUAL/VLDT_12/ VIN4	64	CTS1#/GP31

CONFIDENTIAL

5. Pin Description

The IT8772 is the part simply applied for 3.3V voltage and here are the features regarding its voltage application.

- The I/O buffer output pads are backdrive protected.
- The LPC interface pins are 3.3V only
- The Hardware Monitoring analog pins are 3.3V only. (VIN0~4 and TEMPIN1~2 etc.)
- The input voltage for all other pins is 5V tolerance (ex. ATXPG、FAN_TAC, etc.)
- For the pins with DO attribute, they are not 5V tolerant and should not be pulled- up to 5V.

Table 5-1. Pin Description of Supplies Signals

Pin(s) No.	Symbol	Attribute	Power	Description
11	**3VSB**	PWR	-	***+3.3V Standby Power Supply***
53	**AVCC3**	PWR	-	***+3.3V Analog Power Supply***
29	**VBAT**	PWR	-	***+3V Battery Supply***
12	**VCORE**	AO	-	***Internal Power supply(1.8V)*** It is required to connect this pin with the external capacitance.
54	**GNDD**	GND	-	***Digital Ground***
44	**GNDA**	GND	-	***Analog Ground***
			-	***Thermal Diode Negative Input***

Table 5-2. Pin Description of LPC Bus Interface Signals

Pin(s) No.	Symbol	Attribute	Power	Description
13	**LRESET#**	DI	AVCC3	***LPC RESET #*** EC block will not be reset by LRESET#, which is controlled by AVCC3 PWRGD.
14	**SERIRQ**	DIO16	AVCC3	***Serial IRQ***
15	**LFRAME#**	DI	AVCC3	***LPC Frame #*** This signal indicates the start of the LPC cycle.
16-19	**LAD[0:3]**	DIO16	AVCC3	***LPC Address / Data 0-3*** 4-bit LPC address/bi-directional data lines. LAD0 is LSB and LAD3 is MSB.
22	**PCICLK**	DI	AVCC3	***PCI Clock*** 33 MHz PCI clock input for LPC I/F and SERIRQ.
32	**PME#**	DOD8	3VSB	***Power Management Event #*** The first function of this pin is Power Management Event #. It supports the PCI PME# interface. This signal allows the peripheral to request the system to wake up from the D3 (cold) state.
	GP54	DIOD8	3VSB	***General Purpose I/O 54*** The second function of this pin is General Purpose I/O Port 5 Bit 4.

CONFIDENTIAL

Table 5-3. Pin Description of Hardware Monitor Signals

Pin(s) No.	Symbol	Attribute	Power	Description
1	FAN_TAC2	DI	AVCC3	***Fan Tachometer Input 2*** The first function of this pin is Fan Tachometer Input 2, 0 to +5V amplitude fan tachometer input.
	GP52	DIOD8	AVCC3	***General Purpose I/O 52*** The second function of this pin is General Purpose I/O Port 5 Bit 2.
2	FAN_CTL2	DOD8	AVCC3	***Fan Control Output 2*** The first function of this pin is Fan Control Output 2. (PWM output signal to Fan's FET.)
	GP51	DIOD8	AVCC3	***General Purpose I/O 51*** The second function of this pin is General Purpose I/O Port 5 Bit 1.
3	FAN_TAC3	DI	AVCC3	***Fan Tachometer Input 3*** The first function of this pin is Fan Tachometer Input 3, 0 to +5V amplitude fan tachometer input.
	GP37	DIOD8	AVCC3	***General Purpose I/O 37*** The second function of this pin is General Purpose I/O Port 3 Bit 7.
4	FAN_CTL3	DOD8	AVCC3	***Fan Control Output 3*** The first function of this pin is Fan Control Output 3. (PWM output signal to Fan's FET.)
	GP36	DIOD8	AVCC3	***General Purpose I/O 36*** The second function of this pin is General Purpose I/O Port 3 Bit 6.
28	COPEN#	DIOD8	3VSB or VBAT	***Case Open Detection #*** The Case Open Detection is connected to a specially designed low power CMOS flip-flop dual-powered by battery or 3VSB for case open state preservation during power loss.
46-45	TMPIN[1:2]	AI	AVCC3	***External Thermal Inputs [1:2]*** These pins are connected to thermistors [1:2] or thermal temperature sensors.
47	VREF	AO	AVCC3	***Reference Voltage Output (2.8V)*** Regulated and referred voltage for external temperature sensors and negative voltage monitors.
48	5VDUAL	AI	AVCC3	***System 5VDUAL Monitor*** The first function of this pin is analog input for system 5VDUAL monitor which drops to below 1.05V, the 5VDUAL monitor circuit will assert SUSACK#. The function configuration of this pin is determined by the power-on strapping option (JP1=0).
	VIN4	AI	AVCC3	***Voltage Analog Input 4*** The first function of this pin is 0 to 3.072V FSR Analog Input.
	VLDT_12	AI	AVCC3	***VLDT (1.2V) Analog Inputs*** The second function of this pin is VLDT (1.2V) Analog Input. The function configuration of this pin is determined by the power-on strapping option (JP4).
49	VIN3 (+5V_SEN)	AI	AVCC3	***Voltage Analog Input 3 (+5V power detector)*** The function of this pin is 0 to 3.072V FSR Analog Input. Besides, it is the power detector for PWRGD1/2/3. Please refer to section 11.8 PWRGD1, PWRGD2, PWRGD3 on page 147 for the detail.

CONFIDENTIAL

Pin(s) No.	Symbol	Attribute	Power	Description
50	VIN2 (+12V_SEN)	AI	AVCC3	***Voltage Analog Input 2 (+12V power detector)*** The function of this pin is 0 to 3.072V FSR Analog Input. Besides, it is the power detector for PWRGD1/2/3. Please refer to section 11.8 PWRGD1, PWRGD2, PWRGD3 on page 147 for the detail.
51	VIN1	AI	AVCC3	***Voltage Analog Input 1*** The first function of this pin is 0 to 3.072V FSR Analog Input.
	VDIMM_STR	AI	AVCC3	***VDIMM DUAL STR (1.5V) Analog Input*** The second function of this pin is VDIMM DUAL STR (1.5V) Analog Input. The function configuration of this pin is determined by the power-on strapping option (JP4).
52	VIN0	AI	AVCC3	***Voltage Analog Input 0*** The first function of this pin is 0 to 3.072V FSR Analog Input.
	VCORE(0.8V)	AI	AVCC3	***VCORE (0.8V) Analog Inputs*** The second function of this pin is VCORE (0.8V) Analog Input. The function configuration of this pin is determined by the power-on strapping option (JP4).

Table 5-4. Pin Description of Serial Port 1 Signals

Pin(s) No.	Symbol	Attribute	Power	Description
57	RTS1#	DO8	AVCC3	***Request to Send 1 #*** When this signal is low, the output indicates to the MODEM or data set that the device is ready to send data. RTS# is activated by setting the appropriate bit in the MCR register to 1. After a Master Reset operation or during Loop mode, RTS# is set to its inactive state. For the power-on strapping option, please refer to Table 7-1. Power On Strapping Options on page 23.
58	DSR1#	DI	AVCC3	***Data Set Ready 1 #*** The first function of this pin is Data Set Ready 1 #. When this signal is low, it indicates that the MODEM or data set is ready to establish a communications link. The DSR# signal is a MODEM status input whose condition can be tested by reading the MSR register.
	GP45	DIOD8	3VSB	***General Purpose I/O 45*** The second function of this pin is General Purpose I/O Port 4 Bit 5.
59	SOUT1	DO8	AVCC3	***Serial Data Output 1*** This output sends serial data to the communications link. This signal is set to a marking state (logic 1) after a Master Reset operation or when the device is in one of the Infrared communications modes. For the power-on strapping option, please refer to Table 7-1. Power On Strapping Options on page 23.
	JP3	DI	AVCC3	***Power-On Strapping 3*** For the power-on strapping option, please refer to Table 7-1. Power On Strapping Options on page 23.
60	SIN1	DI	AVCC3	***Serial Data Input 1*** The first function of this pin is Serial Data Input 1. This input receives serial data from the communications link.
	GP41	DIOD8	3VSB	***General Purpose I/O 41*** The second function of this pin is General Purpose I/O Port 4 Bit 1.

CONFIDENTIAL

Pin(s) No.	Symbol	Attribute	Power	Description
61	**DTR1#**	DO8	AVCC3	***Data Terminal Ready 1 #*** DTR# is used to indicate to the MODEM or data set that the device is ready to exchange data. DTR# is activated by setting the appropriate bit in the MCR register to 1. After a Master Reset operation or during Loop mode, DTR# is set to its inactive state. For the power-on strapping option, please refer to Table 7-1. Power On Strapping Options on page 23.
	JP4	DI	AVCC3	***Power-On Strapping 4*** For the power-on strapping option, please refer to Table 7-1. Power On Strapping Options on page 23.
62	**DCD1#**	DI	AVCC3	***Data Carrier Detect 1 #*** The first function of this pin is Data Carrier Detect 1. When this signal is low, it indicates that the MODEM or data set has detected a carrier. The DCD# signal is a MODEM status input whose condition can be tested by reading the MSR register.
	GP33	DIOD8	AVCC3	***General Purpose I/O 33*** The second function of this pin is General Purpose I/O Port 3 Bit 3.
63	**RI1#**	DI	3VSB	***Ring Indicator 1 #*** When this signal is low, it indicates that a telephone ring signal has been received by the MODEM. The RI# signal is a MODEM status input whose condition can be tested by reading the MSR register.
	GP32	DIOD8	AVCC3	***General Purpose I/O 32*** The second function of this pin is General Purpose I/O Port 3 Bit 2.
64	**CTS1#**	DI	AVCC3	***Clear to Send 1 #*** When this signal is low, it indicates that the MODEM or data set is ready to accept data. The CTS# signal is a MODEM status input whose condition can be tested by reading the MSR register.
	GP31	DIOD8	AVCC3	***General Purpose I/O 31*** The second function of this pin is General Purpose I/O Port 3 Bit 1.

CONFIDENTIAL

Table 5-5. Pin Description of Keyboard Controller Signals

Pin(s) No.	Symbol	Attribute	Power	Description
20	**KRST#**	DO8	AVCC3	***Keyboard Reset #*** The first function of this pin is Keyboard Reset #.
	GP62	DIOD8	AVCC3	***General Purpose I/O 62*** The second function of this pin is General Purpose I/O Port 6 Bit 2. This set supports Simple I/O function only.
21	**GA20**	DO8	AVCC3	***Gate Address 20*** For the power-on strapping option, please refer to Table 7-1. Power On Strapping Options on page 23.
38	**KDAT**	DIOD24	3VSB	***Keyboard Data*** The first function of this pin is Keyboard Data.
	GP61	DIOD24		***General Purpose I/O 61*** The second function of this pin is General Purpose I/O Port 6 Bit 1. This set supports Simple I/O function only. This pin doesn't support internal pull-up.
39	**KCLK**	DIOD24	3VSB	***Keyboard Clock*** The first function of this pin is Keyboard Clock.
	GP60	DIOD24		***General Purpose I/O 60*** The second function of this pin is General Purpose I/O Port 6 Bit 0. This set supports Simple I/O function only. This pin doesn't support internal pull-up.
40	**MDAT**	DIOD24	3VSB	***PS/2 Mouse Data*** The first function of this pin is PS/2 Mouse Data.
	GP57	DIOD24	AVCC3	***General Purpose I/O 57*** The second function of this pin is General Purpose I/O Port 5 Bit 7. This pin doesn't support internal pull-up.
41	**MCLK**	DIOD24	3VSB	***PS/2 Mouse Clock*** The first function of this pin is PS/2 Mouse Clock.
	GP56	DIOD24	AVCC3	***General Purpose I/O 56*** The second function of this pin is General Purpose I/O Port 5 Bit 6. This pin doesn't support internal pull-up.

CONFIDENTIAL

Table 5-6. Pin Description of Power Control Signals

Pin(s) No.	Symbol	Attribute	Power	Description
5	5VSB_CTRL#	DOD8	3VSB	***5VSB_CTRL# Power Control Signal*** Please refer to section 11.9 Energy-using Product (EuP) Power Control Signal Timings on page 149 for the detail.
27	SYS_3VSB	AI	3VSB	***System 3.3V Standby Power Detector*** The function of this pin is System Standby Power Detector for RSMRST# output and EuP signal control. Please refer to Table 7-1. Power On Strapping Options on page 23, section 11.9 Energy-using Product (EuP) Power Control Signal Timings on page 149 for the detail and section 11.12 DSW Timings for the detail.
30	SUSB#	DI	3VSB	***SUSB # Input*** The function of this pin is SUSB# Input.
31	PWRON#	DOD8	3VSB	***Power On Request Output #*** The first function of this pin is Power On Request Output #.
	GP44	DIOD8	3VSB	***General Purpose I/O44*** The second function of this pin is General Purpose I/O Port 4 Bit 4.
	JP8	DI		***Power-On Strapping 8*** For the power-on strapping option, please refer to Table 7-1. Power On Strapping Options on page 23.
33	PANSWH#	DI	3VSB	***Main Power Switch Button Input #*** The first function of this pin is Main Power Switch Button Input #.
	GP43	DIOD8	3VSB	***General Purpose I/O 43*** The second function of this pin is General Purpose I/O Port 4 Bit 3.
34	PSON#	DOD8	3VSB	***Power Supply On-Off Output #*** The first function of this pin is Power Supply On-Off Control Output #.
	GP42	DIOD8	3VSB	***General Purpose I/O 42*** The second function of this pin is General Purpose I/O Port 4 Bit 2.
35	SUSC#	DI	3VSB	***SUSC# Input*** The first function of this pin is SUSC# Input.
	GP53	DIOD8	3VSB	***General Purpose I/O 53*** The second function of this pin is General Purpose I/O Port 5 Bit 3.
36	PWRGD3	DOD8	3VSB	***Power Good Output 3 with 150ms Delay Time*** The first function of this pin is Power Good Output 3. For PWRGD1/2/3 signal, it is (AVCC3 power-level-detect **AND** SUSB# **AND** VIN2(+12V_SEN) **AND** VIN3(+5V_SEN) **AND** ATXPG). Please refer to section 11.8 PWRGD1, PWRGD2, PWRGD3 on page 147 for the detail.
	SDA0	DIOD8	AVCC3	***SMBus Slave 0 - Data Pin*** The second function of this pin is data pin of SMBus slave set 0. Please refer to section 8.5.10 Environment Controller Special Configuration Register (Index=F3h, Default=00h).
37	3VSBSW#	DO8	3VSB	***3VSBSW#*** The first function of this pin is 3VSBSW#.
	GP40	DIOD8	3VSB	***General Purpose I/O 40*** The second function of this pin is General Purpose I/O Port 4 Bit 0.

CONFIDENTIAL

Pin(s) No.	Symbol	Attribute	Power	Description
	SCL0	DIOD8	AVCC3	***SMBus Slave 0 - Clock Pin*** The third function of this pin is clock pin of SMBus slave set 0. Please refer to section 8.5.10 Environment Controller Special Configuration Register (Index=F3h, Default=00h).
43	**RSMRST#**	DOD8	3VSB	***Resume Reset #*** The first function of this pin is Resume Reset #. It is a power good signal of SYS_3VSB.
	CIRRX1	DI	3VSB	***Consumer Infrared Receive Input 1*** The second function of this pin is Consumer Infrared Transmit Input 1.
	GP55	DIOD8	3VSB	***General Purpose I/O 55*** The third function of this pin is General Purpose I/O Port 5 Bit 5.

CONFIDENTIAL

Table 5-7. Pin Description of Miscellaneous Signals

Pin(s) No.	Symbol	Attribute	Power	Description
6	**ATXPG**	DI	AVCC3	***ATX Power Good*** The first function of this pin is ATX Power Good. For PWRGD1/2/3 signal, it is (AVCC3 power-level-detect **AND** SUSB# **AND** VIN2(+12V_SEN) **AND** VIN3(+5V_SEN) **AND** ATXPG). Please refer to section 11.8 PWRGD1, PWRGD2, PWRGD3 on page 147 for the detail.
	GP30	DIOD8	AVCC3	***General Purpose I/O 30*** The second function of this pin is General Purpose I/O Port 3 Bit 0.
7	**DPWROK**	DOD8	3VSB	***3VSB Power OK Output*** The first function of this pin is 3VSB Power OK output. The function configuration of this pin is determined by the power-on strapping option (JP1=0).
	CPU_PG	DOD8	AVCC3	***CPU Power-good*** The second function of this pin is to indicate that CPU power-good is ready. The external pull-high resistor is required. The function configuration of this pin is determined by the power-on strapping option (JP4).
	GP23	DIOD8	3VSB	***General Purpose I/O 23*** The third function of this pin is General Purpose I/O Port 2 Bit 3.
8	**GP22**	DIOD8	3VSB	***General Purpose I/O 22*** The second function of this pin is General Purpose I/O Port 2 Bit 2.
9	**SACK#**	DOD8	3VSB	***SUSACK#*** The first function of this pin is SUSACK# Output. When the 5VDUAL pin drops below 0.7V, SIO will issue SUSACK# to PCH. The function configuration of this pin is determined by the power-on strapping option (JP1=0).
	PWRGD1	DOD8	AVCC3	***Power Good Output 1 with 30ms Delay Time*** The function of this pin is Power Good Output 1. For PWRGD1/2/3 signal, it is (AVCC3 power-level-detect **AND** SUSB# **AND** VIN2(+12V_SEN) **AND** VIN3(+5V_SEN) **AND** ATXPG). Please refer to section 11.8 PWRGD1, PWRGD2, PWRGD3 on page 147 for the detail.
23	**GPO50**	DIOD8	AVCC3	***General Purpose I/O Output 50*** The function of this pin is General Purpose I/O Port 5 Bit 0.
	JP1	DI	3VSB	***Power-On Strapping 1*** For the power-on strapping option, please refer to Table 7-1. Power On Strapping Options on page 23.
24	**CLKIN**	DI	AVCC3	***24 or 48 MHz Clock Input***
25	**SUSWARN#**	DI	3VSB	***SUSWARN#*** The first function of this pin is a signal form CPT PCH. When this signal is low, it indicates PCH is in Deep Sleep State. The function configuration of this pin is determined by the power-on strapping option (JP1=0).

CONFIDENTIAL

Pin(s) No.	Symbol	Attribute	Power	Description
	SST	SST	AVCC3	***SST*** The second function of this pin is SST. Specifically when External Thermal Sensor Host (SST、PECI、AMDTSI、PCH SM-Link) is enabled (bit 6-4 of EC Index 0Ah), the function of this pin is selected as SST or ETS_DAT.
	AMDTSI_D	DIOD24	AVCC3	***AMDTSI I/F Data Pin*** The third function of this pin is AMDTSI I/F Data.
26	**PECI**	PECI	AVCC3	***PECI*** The first function of this pin is PECI. Specifically when External Thermal Sensor Host (SST、PECI、AMDTSI、PCH SM-Link) is enabled (bit 6-4 of EC Index 0Ah), this pin is selected as PECI or ETS_CLK.
	AMDTSI_C	DIOD24	AVCC3	***AMDTSI I/F Clock Pin*** The secondd function of this pin is AMDTSI I/F Clock.
42	**PCIRST3#**	DOD8	3VSB	***PCI Reset 3 #*** The first function of this pin is PCI Reset 3 **#**, which is a buffer of LRESET#.
	GP10	DIOD8	3VSB	***General Purpose I/O 10*** The second function of this pin is General Purpose I/O Port 1 Bit 0.
55	**VLDT_EN**	DOD8	AVCC3	***VLDT Enable*** The first function of this pin is to enable VLDT Voltage. The external pull-high resistor is required. The function configuration of this pin is determined by the power-on strapping option (JP4).
	PCH_D	DOD8	AVCC3	***PCH SM-Link Data Pin*** The second function of this pin is PCH SM-Link Data.
	GP65	DIOD8	3VSB	***General Purpose I/O 65*** The third function of this pin is General Purpose I/O Port 6 Bit 5.
56	**VCORE_EN**	DOD8	AVCC3	***VCORE Enable*** The first function of this pin is VCORE Enable, which is to enable the PWM controller for CPU core voltage. The external pull-high resistor is required. The function configuration of this pin is determined by the power-on strapping option (JP4).
	PCH_C	DIOD8	AVCC3	***PCH SM-Link Clock Pin*** The second function of this pin is PCH SM-Link Clock.

CONFIDENTIAL

IO Cell:
DO8: 8mA Digital Output buffer
DOD8: 8mA Digital Open-Drain Output buffer
DO16: 16mA Digital Output buffer
DO24: 24mA Digital Output buffer
DO24L: 24mA shink/8mA drive Digital Output buffer

DIO8: 8mA Digital Input/Output buffer
DIOD8: 8mA Digital Open-Drain Input/Output buffer
DIO16: 16mA Digital Input/Output buffer
DIOD16: 16mA Digital Open-Drain Input/Output buffer
DIO24: 24mA Digital Input/Output buffer
DIOD24: 24mA Digital Open-Drain Input/Output buffer

DI: Digital Input
AI: Analog Input
AO: Analog Output

SST: Special design for SST interface
PECI: Special design for PECI interface
IO_SW: Special type of Input/Output; pins of this type connected in pairs through a switch

CONFIDENTIAL

6. List of GPIO Pins

Table 6-1. GPIO Alternate Function

Group	Bit	Power By	Pin Loc.	1st Func	Condition	2nd Func	Condition	3rd Func	Condition	4th Func	Condition	Output Driving (mA)	Note
GPIO 1x	0	3VSB	42	PCIRST3# (DOD8)		GP10 (DIOD8)	25h<0>=1					8mA	
	2	AVCC3	10	PCIRST1# (DO8)		GP12 (DIOD8)	25h<2>=1					8mA	
GP IO2x	2	3VSB	2	GP22 (DIOD8)	26h<2>=1							8mA	
	3	3VSB	3	CPU_PG (DOD8)	JP4=0	GP23 (DIOD8)	26h<3>=1					8mA	
GPIO 3x	0	AVCC3	6	ATXPG (DI)	27h<0>=0	GP30 (DIOD8)	27h<0>=1					8mA	
	1	AVCC3	64	CTS1# (DI)	27h<1>=0 LDN1 enable	GP31 (DIOD8)	27h<1>=1					8mA	
	2	AVCC3	63	RI1# (DI)	27h<2>=0 LDN1 enable	GP32 (DIOD8)	27h<2>=1					8mA	
	3	AVCC3	62	DCD# (DI)	27h<3>=0 LDN1 enable	GP33 (DIOD8)	27h<3>=1					8mA	
	6	AVCC3	4	FAN_CTL3 (DOD8)		GP36 (DIOD8)	27h<6>=1					8mA	
	7	AVCC3	3	FAN_TAC3 (DI)		GP37 (DIOD8)	27h<7>=1					8mA	
GP IO4x	0	3VSB	37	3VSBSW# (DO8)	2Ah<7>=1	GP40 (DIOD8)	28h<0>=1	SCL0 (DOD8)	LDN4 F3h<1>=1			8mA	
	1	3VSB	60	SIN1 (DI)		GP41 (DIOD8)	28h<1>=1					8mA	
	2	3VSB	34	PSON# (DOD8)		GP42 (DIOD8)	28h<2>=1					8mA	
	3	3VSB	33	PANSWH# (DI)		GP43 (DIOD8)	28h<3>=1					8mA	
	4	3VSB	31	PWRON# (DOD8)		GP44 (DIOD8)	28h<4>=1					8mA	

CONFIDENTIAL

Group	Bit	Power By	Pin Loc.	1st Func	Condition	2nd Func	Condition	3rd Func	Condition	4th Func	Condition	Output Driving (mA)	Note
	5	3VSB	58	DSR1# (DI)		GP45 (DIOD8)	28h<5>=1					8mA	
GPIO 5x	0	AVCC3	23	GP50 (DIOD8)	29h<0>=1							8mA	
	1	AVCC3	2	FAN_CTL2 (DOD8)		GP51 (DIOD8)	29h<1>=1					8mA	
	2	AVCC3	1	FAN_TAC2 (DI)		GP52 (DIOD8)	29h<2>=1					8mA	
	3	3VSB	35	SUSC# (DI)		GP53 (DIOD8)	29h<3>=1					8mA	
	4	3VSB	32	PME# (DOD8)		GP54 (DIOD8)	29h<4>=1					8mA	
	5	3VSB	43	RSMRST# (DOD8)		CIRRX1 (DI)	29h<5>=0	GP55 (DIOD8)	29h<5>=1			8mA	
	6	3VSB	41	MCLK (DIOD24)		GP56 (DIOD24)	29h<6>=1					24mA	No Internal Pull-up Simple I/O Only
	7	3VSB	40	MDAT (DIOD24)		GP57 (DIOD24)	29h<6>=1					24mA	No Internal Pull-up Simple I/O Only
GP IO6x	0	3VSB	39	KCLK (DIOD24)		GP60 (DIOD24)	29h<6>=1					24mA	No Internal Pull-up Simple I/O Only
	1	3VSB	38	KDAT (DIOD24)		GP61 (DIOD24)	29h<6>=1					24mA	No Internal Pull-up Simple I/O Only
	2	AVCC3	20	KRST# (DO8)		GP62 (DIOD16)	29h<6>=1					16mA	Simple I/O Only
	5	3VSB	55	VLDT_EN (DOD8)	JP4=0	PCH_D0 (DIOD8)	2Ah<3>=1	GP65 (DOD8)	29h<7>=1			8mA	Simple I/O Only

CONFIDENTIAL

Table 6-2. GPIO Registers and Power Pads Table

(✓: Power by 3VSB - : Power by AVCC3; ✗: Unsupported by this chip)

GP I/O Group 1	**GPIO10**	**GPIO11**	**GPIO12**	**GPIO13**	**GPIO14**	**GPIO15**	**GPIO16**	**GPIO17**
Pad power	✓	✗	-	✗	✗	✗	✗	✗
Global Register Index 25h<bit0-7>	✓	✗	-	✗	✗	✗	✗	✗
Pin polarity (Index B0h)	-	✗	-	✗	✗	✗	✗	✗
Internal pull-up enable (Index B8h)	✓	✗	✓	✗	✗	✗	✗	✗
Simple I/O Enable (Index C0h)	✓	✗	-	✗	✗	✗	✗	✗
Output/Input Selection (Index C8h)	✓	✗	-	✗	✗	✗	✗	✗
GP I/O Group 2	**GPIO20**	**GPIO21**	**GPIO22**	**GPIO23**	**GPIO24**	**GPIO25**	**GPIO26**	**GPIO27**
Pad power	✗	✗	✓	✓	✗	✗	✗	✗
Global Register Index 26<bit0-7>	✗	✗	✓	✓	✗	✗	✗	✗
Pin polarity (Index B1h)	✗	✗	✓	✓	✗	✗	✗	✗
Internal pull-up enable (Index B9h)	✗	✗	-	-	✗	✗	✗	✗
Simple I/O Enable (Index C1h)	✗	✗	✓	✓	✗	✗	✗	✗
Output/Input Selection (Index C9h)	✗	✗	✓	✓	✗	✗	✗	✗
GP I/O Group 3	**GPIO30**	**GPIO31**	**GPIO32**	**GPIO33**	**GPIO34**	**GPIO35**	**GPIO36**	**GPIO37**
Pad power	-	-	-	-	✗	✗	-	-
Global Register Index 27h<bit0-7>	-	-	-	-	✗	✗	-	-
Pin polarity (Index B2h)	-	-	-	-	✗	✗	-	-
Internal pull-up enable (Index BAh)	-	-	-	-	✗	✗	-	-
Simple I/O Enable (Index C2h)	-	-	-	-	✗	✗	-	-
Output/Input Selection (Index CAh)	-	-	-	-	✗	✗	-	-
GP I/O Group 4	**GPIO40**	**GPIO41**	**GPIO42**	**GPIO43**	**GPIO44**	**GPIO45**	**GPIO46**	**GPIO47**
Pad power	✓	✓	✓	✓	✓	✓	✗	✗
Global Register Index 28h<bit0-7>	✓	✓	✓	✓	✓	✓	✗	✗
Pin polarity (Index B3h)	-	-	-	-	-	-	✗	✗
Internal pull-up enable (Index BBh)	-	-	-	-	-	-	✗	✗
Simple I/O Enable (Index C3h)	✓	✓	✓	✓	✓	✓	✗	✗
Output/Input Selection (Index CBh)	✓	✓	✓	✓	✓	✓	✗	✗
GP I/O Group 5	**GPIO50**	**GPIO51**	**GPIO52**	**GPIO53**	**GPIO54**	**GPIO55**	**GPIO56**	**GPIO57**
Pad power	-	-	-	✓	✓	✓	-	-
Global Register Index 29h<bit0-7>	-	-	-	✓	✓	✓	-	-
Pin polarity (Index B4h)	-	-	-	-	-	-	-	-
Internal pull-up enable (Index BCh)	-	-	-	-	-	-	-	-
Simple I/O Enable (Index C4h)	-	-	-	✓	✓	✓	-	-
Output/Input Selection (Index CCh)	-	-	-	✓	✓	✓	-	-
Note:	GP56、GP57 enabled by index 29h<bit 6>=1							

CONFIDENTIAL

This page is intentionally left blank.

CONFIDENTIAL

7. Power On Strapping Options and Special Pin Routings

Table 7-1. Power On Strapping Options

	Symbol	Strapping Event	Value	Description
JP1 Pin 23	DSW_EUP_SEL	Internal 3VSB_OK	1	EUP
			0	DSW *Note1
JP2 Pin 57	WDT_EN	Internal VCC-OK/ LRESET#	1	Disable WDT to reset PWRGD
			0	Enable WDT to reset PWRGD
JP3 Pin 59	FAN_CTL_SEL	Internal VCC-OK	1	The default value of EC Index 63h/6Bh/73h is 80h.
			0	The default value of EC Index 63h/6Bh/73h is 00h.
JP4 Pin 61	K8PWR_EN	Internal VCC-OK	1	Disable K8 power sequence function
			0	Enable K8 power sequence function

Note: Pull-down with 8.2k ohm recommanded

CONFIDENTIAL

Figure 7-1. IT8772E Special Applications Circuitry for Intel ICH

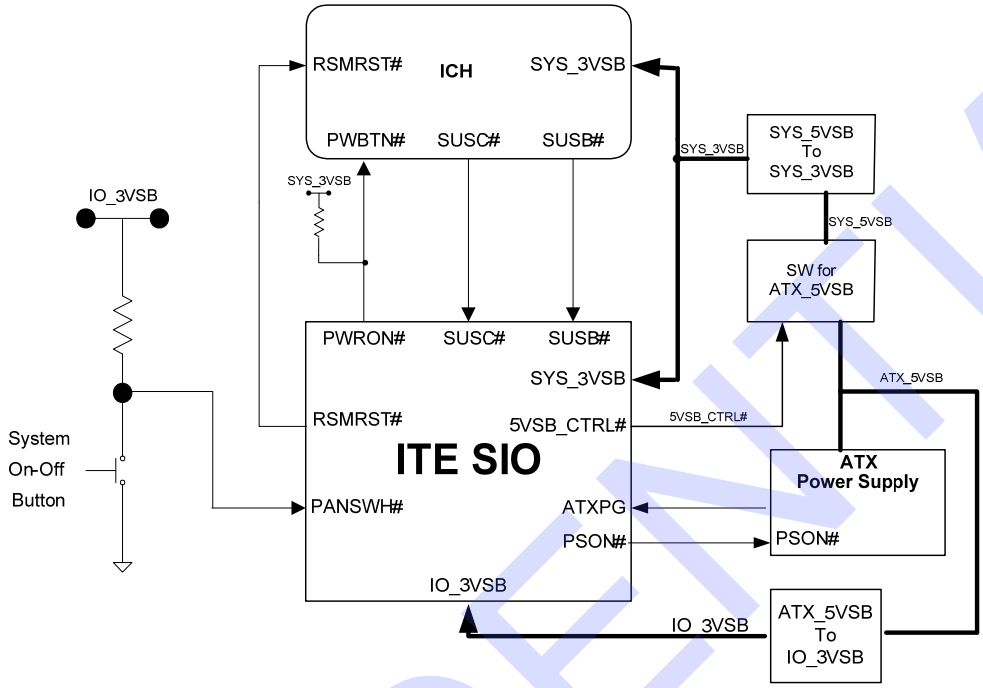

Figure 7-2. IT8772E DSW Applications Circuitry for Intel CPT/PCH

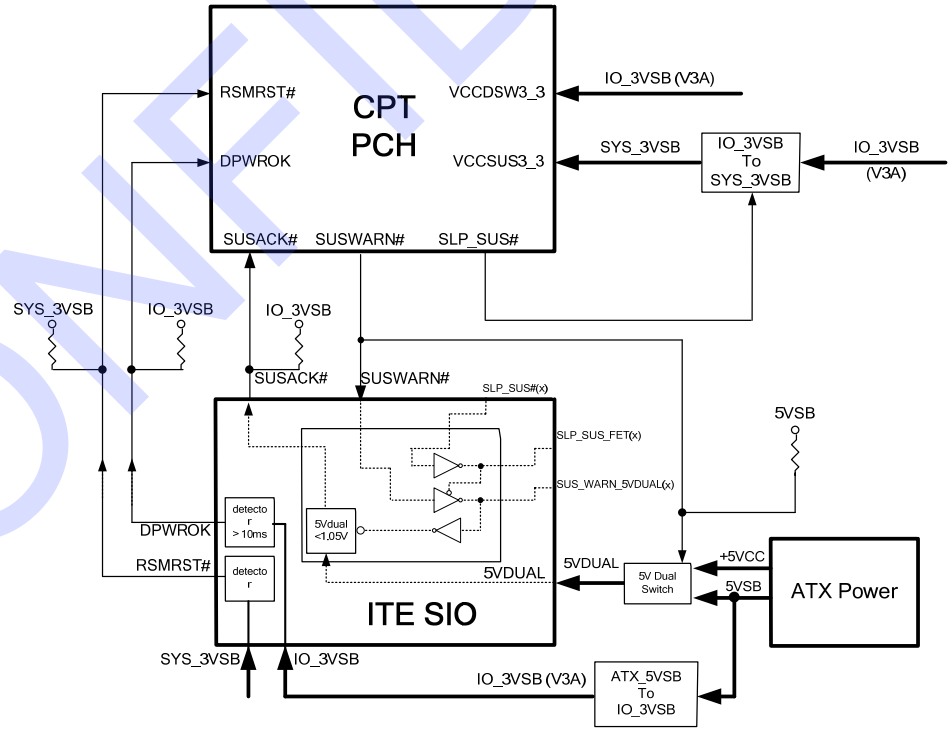

CONFIDENTIAL

8. Configuration

8.1 Configuring Sequence

After a hardware reset or power-on reset, the IT8772E enters the normal mode with all logical devices disabled except KBC. The initial state (enable bit) of this logical device (KBC) is ”1”.

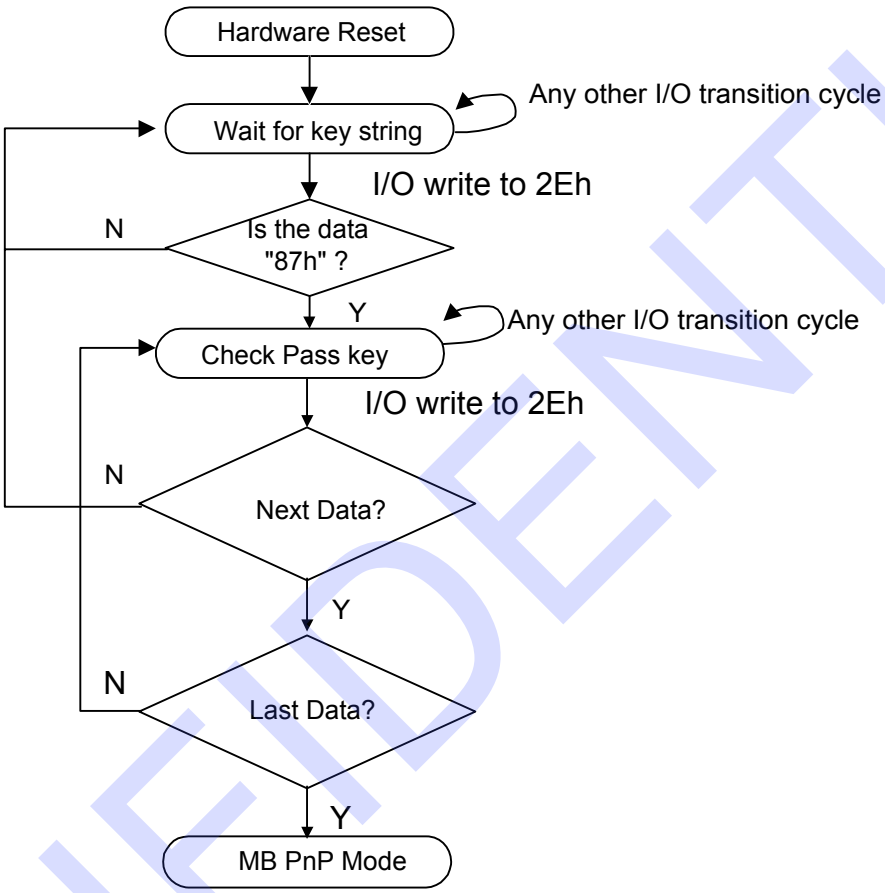

There are three steps below to completing the configuration setup:

(1) Enter MB PnP Mode
(2) Modify data of configuration registers
(3) Exit MB PnP Mode

The undesired result may occur if the MB PnP Mode is not exited properly.

(1) Enter MB PnP Mode

		Address Port	Data Port
	87h, 01h, 55h, 55h;	2Eh	2Fh
or	87h, 01h, 55h, AAh;	4Eh	4Fh

CONFIDENTIAL

(2) Modify Data of Configuration Registers

All config under registers can be accessed after entering the MB PnP Mode. Before accessing a selected register, the content of Index 07h must be changed to the LDN in which the configure register, accessed or default register.

(3) Exit MB PnP Mode

Set bit 1 of the configure control register (Index=02h) to “1” to exit the MB PnP Mode.

CONFIDENTIAL

8.2 Configuration Registers

All registers except APC/PME registers will be reset to the default state when RESET is activated.

Table 8-1. Global Configuration Registers

LDN	Index	R/W	Reset	Configuration Register or Action
All	02h	W	NA	Configure Control
All	07h	R/W	NA	Logical Device Number (LDN)
All	20h	R	87h	Chip ID Byte 1
All	21h	R	72h	Chip ID Byte 2
All	22h	W-R	02h	Chip Version
All	23h	R/W	00h	Clock Selection Register
All	24h	R/W	00h	Special Register
07h Note1	25h	R/W	00h	GPIO Set 1 Multi-Function Pin Selection Register Bit 0 powered by 3VSB.
07h Note1	26h	R/W	F3h	GPIO Set 2 Multi-Function Pin Selection Register Bit 7-0 powered by 3VSB.
07h Note1	27h	R/W	00h	GPIO Set 3 Multi-Function Pin Selection Register
07h Note1	28h	R/W	00h	GPIO Set 4 Multi-Function Pin Selection Register Bit 7-0 powered by 3VSB.
07h Note1	29h	R/W	00h	GPIO Set 5, 6 Multi-Function Pin Selection Register Bit 5-3 powered by 3VSB.
07h Note1	2Ah	R/W	00h	Special Function Selection Register 1 Bit 7-0 powered by 3VSB.
All	2Bh	R/W	0000s000h	Special Function Selection Register 2
07h Note1	2Ch	R/W	01h	Special Function Selection Register 3 Bit 7-0 powered by 3VSB.
F4h Note1	2Eh	R/W	00h	Test 1 Register
F4h Note1	2Fh	R/W	00h	Test 2 Register

Note 1: These registers can be read from all LDNs.

Table 8-2. Serial Port 1 Configuration Registers

LDN	Index	R/W	Reset	Configuration Register or Action
01h	30h	R/W	00h	Serial Port 1 Activate
01h	60h	R/W	03h	Serial Port 1 Base Address MSB Register
01h	61h	R/W	F8h	Serial Port 1 Base Address LSB Register
01h	70h	R/W	04h	Serial Port 1 Interrupt Level Select
01h	F0h	R/W	00h	Serial Port 1 Special Configuration Register 1

CONFIDENTIAL

LDN	Index	R/W	Reset	Configuration Register or Action
01h	F1h	R/W	50h	Serial Port 1 Special Configuration Register 2

CONFIDENTIAL

Table 8-3. Environment Controller Configuration Registers

LDN	Index	R/W	Reset	Configuration Register or Action
04h	30h	R/W	00h	Environment Controller Activate
04h	60h	R/W	02h	Environment Controller Base Address MSB Register
04h	61h	R/W	90h	Environment Controller Base Address LSB Register
04h	62h	R/W	02h	PME Direct Access Base Address MSB Register
04h	63h	R/W	30h	PME Direct Access Base Address LSB Register
04h	70h	R/W	09h	Environment Controller Interrupt Level Select
04h	F0h	R/W	00h	APC/PME Event Enable Register
04h	F1h	R/W	00h	APC/PME Status Register
04h	F2h	R/W	00h	APC/PME Control Register 1
04h	F3h	R/W	00h	Environment Controller Special Configuration Register
04h	F4h	R-R/W	00h	APC/PME Control Register 2
04h	F5h	R/W	-	APC/PME Special Code Index Register
04h	F6h	R/W	-	APC/PME Special Code Data Register
04h	F9h	R/W	-	Under Voltage Protection/Over Voltage Protection (UVP/OVP)
04h	FAh	R/W	-	Special Configuration Register 1
04h	FBh	R/W	-	Special Configuration Register 2

Table 8-4. KBC(Keyboard) Configuration Registers

LDN	Index	R/W	Reset	Configuration Register or Action
05h	30h	R/W	01h	KBC(Keyboard) Activate
05h	60h	R/W	00h	KBC(Keyboard) Data Base Address MSB Register
05h	61h	R/W	60h	KBC(Keyboard) Data Base Address LSB Register
05h	62h	R/W	00h	KBC(Keyboard) Command Base Address MSB Register
05h	63h	R/W	64h	KBC(Keyboard) Command Base Address LSB Register
05h	70h	R/W	01h	KBC(Keyboard) Interrupt Level Select
05h	71h	R-R/W	02h	KBC(Keyboard) Interrupt Type [Note3]
05h	F0h	R/W	48h	KBC(Keyboard) Special Configuration Register

Table 8-5. KBC(Mouse) Configuration Registers

LDN	Index	R/W	Reset	Configuration Register or Action
06h	30h	R/W	00h	KBC(Mouse) Activate
06h	70h	R/W	0Ch	KBC(Mouse) Interrupt Level Select
06h	71h	R-R/W	02h	KBC(Mouse) Interrupt Type [Note3]
06h	F0h	R/W	00h	KBC(Mouse) Special Configuration Register

Note 3: These registers are **read only** unless the write enable bit (Index=F0h) is asserted.

CONFIDENTIAL

Table 8-6. GPIO Configuration Registers

LDN	Index	R/W	Reset	Configuration Register or Action
07h	60h	R/W	00h	SMI# Normal Run Access Base Address MSB Register
07h	61h	R/W	00h	SMI# Normal Run Access Base Address LSB Register
07h	62h	R/W	00h	Simple I/O Base Address MSB Register
07h	63h	R/W	00h	Simple I/O Base Address LSB Register
07h	70h	R/W	00h	Panel Button De-bounce Interrupt Level Select Register
07h	71h	R/W	00h	Watch Dog Timer Control Register
07h	72h	R/W	20h	Watch Dog Timer Configuration Register
07h	73h	R/W	38h	Watch Dog Timer Time-out Value (LSB) Register
07h	74h	R/W	00h	Watch Dog Timer Time-out Value (MSB) Register
07h	B0h	R/W	00h	GPIO Set 1 Pin Polarity Register
07h	B1h	R/W	00h	GPIO Set 2 Pin Polarity Register
07h	B2h	R/W	00h	GPIO Set 3 Pin Polarity Register
07h	B3h	R/W	00h	GPIO Set 4 Pin Polarity Register
07h	B4h	R/W	00h	GPIO Set 5 Pin Polarity Register
07h	B8h	R/W	20h	GPIO Set 1 Pin Internal Pull-up Enable Register
07h	B9h	R/W	00h	GPIO Set 2 Pin Internal Pull-up Enable Register
07h	BAh	R/W	00h	GPIO Set 3 Pin Internal Pull-up Enable Register
07h	BBh	R/W	00h	GPIO Set 4 Pin Internal Pull-up Enable Register
07h	BCh	R/W	00h	GPIO Set 5 Pin Internal Pull-up Enable Register
07h	BDh	R/W	00h	GPIO Set 6 Pin Internal Pull-up Enable Register
07h	C0h	R/W	01h	Simple I/O Set 1 Enable Register Bit 0 powered by 3VSB.
07h	C1h	R/W	00h	Simple I/O Set 2 Enable Register Bit 7-0 powered by 3VSB.
07h	C2h	R/W	00h	Simple I/O Set 3 Enable Register
07h	C3h	R/W	40h	Simple I/O Set 4 Enable Register Bit 7-0 powered by 3VSB.
07h	C4h	R/W	00h	Simple I/O Set 5 Enable Register Bit 7-0 powered by 3VSB.
07h	C8h	R/W	01h	Simple I/O Set 1 Output Enable Register
07h	C9h	R/W	00h	Simple I/O Set 2 Output Enable Register
07h	CAh	R/W	00h	Simple I/O Set 3 Output Enable Register
07h	CBh	R/W	00h	Simple I/O Set 4 Output Enable Register Bit 7-0 powered by 3VSB.

CONFIDENTIAL

LDN	Index	R/W	Reset	Configuration Register or Action
07h	CCh	R/W	00h	Simple I/O Set 5 Output Enable Register Bit 7-0 powered by 3VSB.
07h	CDh	R/W	00h	Simple I/O Set 6 Output Enable Register Bit 7-0 powered by 3VSB.
07h	E0h	R/W	00h	Panel Button De-bounce 0 Input Pin Mapping Register
07h	E1h	R/W	00h	Panel Button De-bounce 1 Input Pin Mapping Register
07h	E2h	R/W	00h	IRQ External Routing 0 Input Pin Mapping Register
07h	E3h	R/W	00h	IRQ External Routing 1 Input Pin Mapping Register
07h	E4h	R/W	00h	IRQ External Routing 1-0 Interrupt Level Selection Registers
07h	E9h	R/W	00000---b	Bus Select Control Register
07h	F0h	R/W	00h	SMI# Control Register 1
07h	F1h	R/W	00h	SMI# Control Register 2
07h	F2h	R/W	00h	SMI# Status Register 1
07h	F3h	R/W	00h	SMI# Status Register 2
07h	F4h	R/W	00h	SMI# Pin Mapping Register
07h	F5h	R/W	00h	Hardware Monitor Thermal Output Pin Mapping Register Bit 7-0 powered by 3VSB.
07h	F6h	R/W	00h	Hardware Monitor Alert Beep Pin Mapping Register
07h	F7h	R/W	00h	Keyboard Lock Pin Mapping Register
07h	F8h	R/W	00h	GP LED Blinking 1 Pin Mapping Register Bit 7-0 powered by 3VSB.
07h	F9h	R/W	00h	GP LED Blinking 1 Control Register Bit 7-0 powered by 3VSB.
07h	FAh	R/W	00h	GP LED Blinking 2 Pin Mapping Register Bit 7-0 powered by 3VSB.
07h	FBh	R/W	00h	GP LED Blinking 2 Control Register Bit 7-0 powered by 3VSB.

Table 8-7. Consumer IR Configuration Registers

LDN	Index	R/W	Reset	Configuration Register or Action
0Ah	30h	R/W	00h	Consumer IR Activate
0Ah	60h	R/W	03h	Consumer IR Base Address MSB Register
0Ah	61h	R/W	10h	Consumer IR Base Address LSB Register
0Ah	70h	R/W	0Bh	Consumer IR Interrupt Level Select
0Ah	F0h	R/W	06h	Consumer IR Special Configuration Register

CONFIDENTIAL

8.2.1 Logical Device Base Address

The base I/O range of logical devices shown below is located in the base I/O address range of each logical device.

Table 8-8. Base Address of Logical Devices

Logical Devices	Address	Notes
LDN=0 FDC	Base + (2 - 5) and + 7	
LDN=1 SERIAL PORT 1	Base + (0 -7)	
LDN=4 Environment Controller	Base1 + (0 -7) Base2 + (0 -3)	Environment Controller PME#
LDN=5 KBC	Base1 + Base2	KBC
LDN=A Consumer IR	Base + (0 -7)	

CONFIDENTIAL

8.3 Global Configuration Registers (LDN: All)

8.3.1 Configure Control (Index=02h)

This register is **write only**. Its values are not sticky; that is to say, a hardware reset will automatically clear the bits, and the software is not required to clear them.

Bit	Description
7-2	**Reserved**
1	Returns to the "Wait for Key" state. This bit is used when the configuration sequence is completed.
0	Resets all logical devices and restores configuration registers to their power-on states.

8.3.2 Logical Device Number (LDN, Index=07h)

This register is, **read/write,** which is to select the current logical devices. By reading data from or writing data to the configuration of I/O, Interrupt, DMA and other special functions, all registers of the logical devices can be accessed. In addition, ACTIVATE command is only effective for the selected logical devices.

8.3.3 Chip ID Byte 1 (Index=20h, Default=87h)

This register is Chip ID Byte 1 and **read only**. Bits [7:0]=87h when read.

8.3.4 Chip ID Byte 2 (Index=21h, Default=72h)

This register is Chip ID Byte 2 and **read only**. Bits [7:0]=72h when read.

8.3.5 Chip Version (Index=22h, Default=02h)

Bit	Description
7-4	**Reserved**
3-0	**Version** 000b for BX/CX version 001b for DX,EX version 010b for FX version The part no. is IT8772FX.

8.3.6 Clock Selection Register (Index=23h, Default=00h)

Bit	Description
7-5	**Reserved**
4	**Clock Source Select of Watch Dog Timer** 0: Internal oscillating clock (Default) 1: External CLKIN
3	**Reserved**
2	**PWRGD3 Timing Selection** 0: 150ms 1: 300ms
1	**Reserved**
0	**CLKIN Frequency**

CONFIDENTIAL

Bit	Description
	0: 48 MHz (Default) 1: 24 MHz

CONFIDENTIAL

8.3.7 Special Register (Index=24h, Default=00h)

Bit	Description
7-0	**Reserved**

8.3.8 GPIO Set 1 Multi-Function Pin Selection Register (Index=25h, Default=00h)

If the enabled bits are not set, the multi-function pins will perform the original functions. Conversely, if they are set, they will perform the GPIO functions. This register can be read from any LDN, but can only be written if LDN=07h.

Bit	Description
7-3	**Reserved**
3	**Reserved**
2	**Function Selection of Pin 10** 0: PCIRST1# (Default) 1: GP12
1	**Reserved**
0	**Function Selection of Pin 42** 0: PCIRST3# (Default) 1: GP10

8.3.9 GPIO Set 2 Multi-Function Pin Selection Register (Index=26h, Default=F3h)

If the enabled bits are not set, the multi-function pins will perform the original functions. Conversely, if they are set, they will perform the GPIO functions. This register can be read from any LDN, but can only be written if LDN=07h.

Bit	Description
7-4	**Reserved**
3	**Function Selection of Pin 7** 0: CPU_PG, if JP4=0 1: GP23
2	**Function Selection of Pin 8** 0: Reserved 1: GP22
1-0	**Reserved**

CONFIDENTIAL

8.3.10 GPIO Set 3 Multi-Function Pin Selection Register (Index=27h, Default=00h)

If the enabled bits are not set, the multi-function pins will perform the original functions. Conversely, if they are set, they will perform the GPIO functions. This register can be read from any LDN, but can only be written if LDN=07h.

Bit	Description
7	**Function Selection of Pin 3** 0: FAN_TAC3 (Default) 1: GP37
6	**Function Selection of Pin 4** 0: FAN_CTL3 (Default) 1: GP36
5-4	**Reserved**
3	**Function Selection of Pin 62** 0: DCD1# if COM1 enable **1: GP33**
2	**Function Selection of Pin 63** 0: RI1# if COM1 enable **1: GP32**
1	**Function Selection of Pin 64** 0: CTS1# if COM1 enable **1: GP31**
0	**Function Selection of Pin 6** 0: ATXPG 1: GP30

8.3.11 GPIO Set 4 Multi-Function Pin Selection Register (Index=28h, Default=00h)

If the enabled bits are not set, the multi-function pins will perform the original functions. Conversely, if they are set, they will perform the GPIO functions. This register can be read from any LDN, but can only be written if LDN=07h.

Bit	Description
7-6	**Reserved**
5	**Function Selection of Pin 58** 0: DSR1# (Default) 1: GP45
4	**Function Selection of Pin 31** 0: PWRON# (Default) 1: GP44
3	**Function Selection of Pin 33** 0: PANSWH# (Default) 1: GP43
2	**Function Selection of Pin 34** 0: PSON# (Default) 1: GP42
1	**Function Selection of Pin 60** 0: SIN1 (Default) 1: GP41
0	**Function Selection of Pin 37** 0: 3VSBSW# (Default)

CONFIDENTIAL

Bit	Description
	1: GP40

8.3.12 GPIO Set 5, 6 Multi-Function Pin Selection Register (Index=29h, Default=00h)

If the enabled bits are not set, the multi-function pins will perform the original functions. Conversely, if they are set, they will perform the GPIO functions. This register can be read from any LDN, but can only be written if LDN=07h.

Bit	Description
7	**Function Selection of Pin 41, 40** 0: MCLK, MDAT, 1: GP56, GP57
6	Function Selection of Pin 39, 38, 20 0: KCLK, KDAT, KRST# (Default) 1: GP60, GP61, GP62
5	**Function Selection of Pin 43** 0: CIRRX1 or RSMRST# (Default) RSMRST# is an open-drain output function, which is active low about 60ms when 3VSB is powered on. 1: GP55
4	**Function Selection of Pin 32** 0: PME# (Default) 1: GP54
3	**Function Selection of Pin 35** 0: SUSC# (Default) 1: GP53
2	**Function Selection of Pin 1** 0: FAN_TAC2 (Default) 1: GP52
1	**Function Selection of Pin 2** 0: FAN_CTL2 (Default) 1: GP51
0	**Function Selection of Pin 23** 0: Reserved (Default) 1: GP50

8.3.13 Special Function Selection Register 1 (Index=2Ah, Default=00h)

This register can be read from any LDN, but can only be written if LDN=07h.

Bit	Description
7	**Enable 3VSBSW# (For System Suspend-to-RAM)** 0: 3VSBSW# is always inactive. (Default) 1: 3VSBSW# is enabled. It will be (NOT SUSB#) NAND SUSC#.
6-1	**Reserved**
0	**Delay Time Selection of 3VSBSW# Rising Edge to PWRGD Rising Edge** 0: 1us (Default) 1: 135ms

CONFIDENTIAL

8.3.14 Special Function Selection Register 2 (Index=2Bh, Default=0000s000h)

Bit	Description
7-3	**Reserved**
2-0	**PANSWH# Mask Time** 000: Default 001: 1 second 010: 2 seconds 011: 3 seconds 100: 4 seconds

8.3.15 Special Function Selection Register 3 (Index=2Ch, Default=01h)

This register can be read from any LDN, but can only be written if LDN=07h.

Bit	Description
7	**Reserved**
6	**K8 PWRON_SEL if JP4=0** 0: Normal (Default) 1: Software disabled
5	**Reserved**
4	**PS2 Mouse Double Click Wake-up Mode Selection** 0: 3-Byte mode (Default) 1: 4-Byte mode
3-1	**Reserved**
0	**VIN3 Function Selection** 0: External VIN3 voltage sensor 1: Internal Voltage Divider for ACC3. (Default)

8.3.16 Test 1 Register (Index=2Eh, Default=00h)

This register is reserved for ITE and should not be set.

8.3.17 Test 2 Register (Index=2Fh, Default=00h)

This register is reserved for ITE and should not be set.

CONFIDENTIAL

8.4 Serial Port 1 Configuration Registers (LDN=01h)

8.4.1 Serial Port 1 Activate (Index=30h, Default=00h)

Bit	Description
7-1	**Reserved**
0	**Serial Port 1 Enable** 1: Enable 0: Disable

8.4.2 Serial Port 1 Base Address MSB Register (Index=60h, Default=03h)

Bit	Description
7-4	**Read only** as “0h” for Base Address[15:12]
3-0	**Read/write**, mapped as Base Address[11:8]

8.4.3 Serial Port 1 Base Address LSB Register (Index=61h, Default=F8h)

Bit	Description
7-3	**Read/write**, mapped as Base Address[7:3]
2-0	**Read only** as “000b”

8.4.4 Serial Port 1 Interrupt Level Select (Index=70h, Default=04h)

Bit	Description
7-4	**Reserved** with default “0h”
3-0	**Interrupt Select Level for Serial Port 1** Please refer to Table 8-9 Interrupt Level Mapping Table.

8.4.5 Serial Port 1 Special Configuration Register 1 (Index=F0h, Default=00h)

Bit	Description
7	**Reserved**
6-4	**Serial Port 1 Mode** 000: Standard (default) Else : Reserved
3	**Reserved** with default “0”
2-1	**Clock Source** 00: 24 MHz/13 (Standard) 01: 24 MHz/12 10: Reserved 11: Reserved
0	**IRQ Type** 1: IRQ sharing 0: Normal

8.4.6 Serial Port 1 Special Configuration Register 2 (Index=F1h, Default=50h)

Bit	Description

CONFIDENTIAL

7-0	**Reserved**

CONFIDENTIAL

8.5 Environment Controller Configuration Registers (LDN=04h)

8.5.1 Environment Controller Activate (Index=30h, Default=00h)

Bit	Description
7-1	**Reserved**
0	**Environment Controller Enable** 1: Enable 0: Disable This is a read/write register.

8.5.2 Environment Controller Base Address MSB Register (Index=60h, Default=02h)

Bit	Description
7-4	**Read only** as “0h” for Base Address[15:12]
3-0	**Read/write**, mapped as Base Address[11:8]

8.5.3 Environment Controller Base Address LSB Register (Index=61h, Default=90h)

Bit	Description
7-3	**Read/write**, mapped as Base Address[7:3]
2-0	**Read only** as “000b”

8.5.4 PME Direct Access Base Address MSB Register (Index=62h, Default=02h)

Bit	Description
7-4	**Read only** as “0h” for Base Address[15:12]
3-0	**Read/write**, mapped as Base Address[11:8]

8.5.5 PME Direct Access Base Address LSB Register (Index=63h, Default=30h)

Bit	Description
7-3	**Read/write**, mapped as Base Address[7:3]
2-0	**Read only** as “000b.”

8.5.6 Environment Controller Interrupt Level Select (Index=70h, Default=09h)

Bit	Description
7-4	**Reserved** with default “0h”
3-0	**Interrupt Level Select for Environment Controller** Please refer to Table 8-9 Interrupt Level Mapping Table on page 59.

CONFIDENTIAL

8.5.7 APC/PME Event Enable Register (PER) (Index=F0h, Default=00h)

Bit	Description
7	This bit is set to 1 when 3VSB is off and becomes ineffective if 0 is written to it. Write 1 to clear this bit.
6-5	**Reserved** with default “00b”
4	**PS/2 Mouse Event** 0: Disable 1: Enable
3	**Keyboard Event** 0: Disable 1: Enable
2-1	**Reserved**
0	**CIR Event** 0: Disable 1: Enable

8.5.8 APC/PME Status Register (PSR) (Index=F1h, Default=00h)

Bit	Description
7	This bit is set to 1 when AVCC3 is on at the previous AC power failure whereas 0 when AVCC3 is off.
6-5	**Reserved**
4	0: No PS/2 mouse event detected 1: PS/2 mouse event detected
3	0: No keyboard event detected 1: Keyboard event detected
2-1	**Reserved**
0	0: No CIR event detected 1: CIR event detected

8.5.9 APC/PME Control Register 1 (PCR 1) (Index=F2h, Default=00h)

Bit	Description
7	**PER and PSR Normal Run Access Enable**
6	**PME# Output Control** 0: Enable 1: Disable
5	This bit is restored automatically to the previous AVCC3 state before the power failure occurs. **Note:** AC failure resume can be made by either IO or South Bridge. For the use of IO, the BIOS needs to be set as the following: LDN4 F4<5> and LDN4 F2<5> setting: 1 X :Always ON 0 1 :Memory 0 0 :Always OFF For the use of South Bridge, F4 bit 5 and F4 bit 6 need to be set to 1.
4	**Reserved**
3	**Keyboard event mode selection when AVCC3 is on** 1: Determined by PCR 2

CONFIDENTIAL

Bit	Description
	0: Pulse falling edge on KCLK
2	**Mouse event when AVCC3 is off** 1: Determined by LDN4\FBh<6-4> 0: Pulse falling edge on MCLK
1	**Mouse event when AVCC3 is on** 1: Click key twice sequentially 0: Pulse falling edge on MCLK
0	**CIRRX1 Pin Selection** 1: Pin 42 0: Pin 43

8.5.10 Environment Controller Special Configuration Register (Index=F3h, Default=00h)

Bit	Description
7-6	**Reserved**
5	**Reserved; must be 0b**
4-2	**Reserved**
1	**SMBus Slave 0 Enable (Pin 37:SCL0/ Pin 36:SDA0)** 0: Disable.(Default) 1: Enable **Note:** SMBus Slave supports Bye Read/Write Command only for accessing Hardware Monitor information.
0	**IRQ Type** 1: IRQ sharing 0: Normal

8.5.11 APC/PME Control Register 2 (PCR 2) (Index=F4h, Default=00h)

Bit	Description
7	**Auto-swap of KCLK/KDAT and MCLK/MDAT** 0: Enable (Default) 1: Disable
6	**Gate Extra PWRON# Pulse at First 3VSB Power-on** 0: None gating (Default) 1: Gating **Note:** AC failure resume can be made by either IO or South Bridge. For the use of IO, the BIOS needs to be set as the following: LDN4 F4<5> and LDN4 F2<5> setting: 1 X :Always ON 0 1 :Memory 0 0 :Always OFF For the use of South Bridge, F4 bit 5 and F4 bit 6 need to be set to 1.
5	**PSON# state when 3VSB is switched from off to on** 0: High-Z (power OFF in default) 1: Inverting of SUSB#
4	**Reserved**
3-2	**Key Number of Keyboard Power-up Event** 00: 5 Key string mode, 3 keys simultaneous mode

CONFIDENTIAL

	01: 4 Key string mode, 2 keys simultaneous mode 10: 3 Key string mode, 1 key simultaneous mode 11: 2 Key string mode, Reserved (Not valid for simultaneous mode)
1-0	**Mode Selection of Keyboard Power-up Event** 00: KCLK falling edge 01: Key string mode 10: Simultaneous key stroke mode 11: Reserved

CONFIDENTIAL

8.5.12 APC/PME Special Code Index Register (Index=F5h)

Bit	Description
7-6	**Reserved (should be "00")**
5-0	**Indicate which Identification Key Code or CIR code register to be read/written via 0xF6** 00h~04h: Key code 20h~32h: CIR code 34h~37h: VBAT registers 38h~3Eh: VBAT registers

8.5.13 APC/PME Special Code Data Register (Index=F6h)

There are 5 bytes for the Key String mode, 3 bytes for Stroke Keys at the same time mode and CIR event codes.

8.5.14 Under Voltage Protection/Over Voltage Protection (UVP/OVP) (Index=F9h)

Bit	Description
7	**Notice Mode UVP/OVP Enable** 0: Disable 1: Enable
6-5	**Reserved**
4-3	**Notice Mode PSON# Pull-up Time** 00: 0.5 second 01: 1 second 10: 2 seconds 11: 4 seconds
2-1	**Reserved**
0	**Notice Mode Status** 0: Disable 1: Enable

8.5.15 Special Configuration Register 1 (Index=FAh)

Bit	Description
7-5	**Reserved**
4	**EuP Wake-up Event** 0: Disable 1: Enable
3	**Reserved**
2	**RI1# Wake-up Event** 0: Disable 1: Enable
1	**5VSB_CTRL#** 0: Disable 1: Enable
0	Reserved

8.5.16 Special Configuration Register 2 (Index=FBh)

CONFIDENTIAL

Bit	Description
7	**Reserved**
6-4	**PS/2 Mouse Wake-up Event Selection** 000: Double clicking any buttons 001: One clicking the left button 010: One clicking the right button 011: One clicking the left or right button 101: Double clicking the left button 110: Double clicking the right button Others: Reserved
3	**Reserved**
2	**RI1# Wake-up Event Status** 0: No RI1# event detected 1: RI1# event detected
1-0	**Resume Timing from AC Fail Resume** 00: 2 seconds 01: 4 seconds 10: 8 seconds 11: 12 seconds

CONFIDENTIAL

8.6 KBC(Keyboard) Configuration Registers (LDN=05h)

8.6.1 KBC(Keyboard) Activate (Index=30h, Default=01h)

Bit	Description
7-1	**Reserved**
0	**KBC(Keyboard) Enable** 1: Enable 0: Disable

8.6.2 KBC(Keyboard) Data Base Address MSB Register (Index=60h, Default=00h)

Bit	Description
7-4	**Read only** as "0h" for Base Address [15:12]
3-0	**Read/write,** mapped as Base Address [11:8]

8.6.3 KBC(Keyboard) Data Base Address LSB Register (Index=61h, Default=60h)

Bit	Description
7-0	**Read/write**, mapped as Base Address[7:0]

8.6.4 KBC(Keyboard) Command Base Address MSB Register (Index=62h, Default=00h)

Bit	Description
7-4	**Read only** as "0h" for Base Address[15:12]
3-0	**Read/write**, mapped as Base Address[11:8]

8.6.5 KBC(Keyboard) Command Base Address LSB Register (Index=63h, Default=64h)

Bit	Description
7-0	**Read/write**, mapped as Base Address[7:0]

8.6.6 KBC(Keyboard) Interrupt Level Select (Index=70h, Default=01h)

Bit	Description
7-4	**Reserved** with default "0h"
3-0	**Interrupt Level Select for KBC(Keyboard)** Please refer to Table 8-9 Interrupt Level Mapping Table on page 59.

8.6.7 KBC(Keyboard) Interrupt Type (Index=71h, Default=02h)

This register indicates the interrupt type set for KBC(Keyboard) and is **read only** as "02h" when bit 0 of the KBC(Keyboard) Special Configuration Register is cleared. When bit 0 is set, the interrupt type can be selected as level or edge trigger.

Bit	Description
7-2	**Reserved**
1	1: High level

CONFIDENTIAL

Bit	Description
	0: Low level
0	1: Level type 0: Edge type

8.6.8 KBC(Keyboard) Special Configuration Register (Index=F0h, Default=08h)

Bit	Description
7-5	**Reserved** Must be “000b”
4	**IRQ Type** 1: IRQ sharing 0: Normal
3	**KBC Clock** 1: 8 MHz 0: 12 MHz
2	**KBC Lock** 1: Enable 0: Disable
1	**Interrupt Type Change Enable** 1: The interrupt type for KBC(Keyboard) can be changed. 0: The interrupt type for KBC(Keyboard) is fixed.
0	**Reserved**

CONFIDENTIAL

8.7 KBC(Mouse) Configuration Registers (LDN=06h)

8.7.1 KBC(Mouse) Activate (Index=30h, Default=00h)

Bit	Description
7-1	**Reserved**
0	**KBC(Mouse) Enable** 1: Enable 0: Disable

8.7.2 KBC(Mouse) Interrupt Level Select (Index=70h, Default=0Ch)

Bit	Description
7-4	**Reserved** with default "0h"
3-0	**Interrupt Level Select for KBC(Mouse)** Please refer to Table 8-9 Interrupt Level Mapping Table on page 59.

8.7.3 KBC(Mouse) Interrupt Type (Index=71h, Default=02h)

This register indicates the interrupt type set for KBC(Mouse) and is **read only** as "02h" when bit 0 of the KBC(Mouse) Special Configuration Register is cleared. When bit 0 is set, the interrupt type can be selected as level or edge trigger.

Bit	Description
7-2	**Reserved**
1	1: High level 0: Low level
0	1: Level type 0: Edge type

8.7.4 KBC(Mouse) Special Configuration Register (Index=F0h, Default=00h)

Bit	Description
7-2	**Reserved** with default "00h"
1	**IRQ Type** 1: IRQ sharing 0: Normal
0	**Interrupt Type Change Enable** 1: The interrupt type for KBC(Mouse) can be changed. 0: The interrupt type for KBC(Mouse) is fixed.

CONFIDENTIAL

8.8 GPIO Configuration Registers (LDN=07h)

8.8.1 SMI# Normal Run Access Base Address MSB Register (Index=60h, Default=00h)

Bit	Description
7-4	**Read only** as "0h" for Base Address [15:12]
3-0	**Read/write**, mapped as Base Address [11:8]

8.8.2 SMI# Normal Run Access Base Address LSB Register (Index=61h, Default=00h)

Bit	Description
7-2	**Read/write**, mapped as Base Address [7:2]
1-0	**Read only** as "00b"

8.8.3 Simple I/O Base Address MSB Register (Index=62h, Default=00h)

Bit	Description
7-4	**Read only** as "0h" for Base Address [15:12]
3-0	**Read/write**, mapped as Base Address [11:8]

8.8.4 Simple I/O Base Address LSB Register (Index=63h, Default=00h)

Bit	Description
7-3	Read/write**, mapped as Base Address[7:0]**
2-0	Read only **as "00b"**

8.8.5 Panel Button De-bounce Interrupt Level Select Register (Index=70h, Default=00h)

Bit	Description
7-4	**Reserved**
3-0	**Interrupt Level Select for Panel Button De-bounce** Please refer to Table 8-9 Interrupt Level Mapping Table on page 59.

8.8.6 Watch Dog Timer Control Register (Index=71h, Default=00h)

Bit	Description
7	WDT is reset upon a CIR interrupt.
6	WDT is reset upon a KBC(Mouse) interrupt.
5	WDT is reset upon a KBC(Keyboard) interrupt.
4	**Reserved**
3-2	**Reserved**
1	**Force Time-out** This bit is self-cleared.
0	**WDT Status** 1: WDT value is equal to 0. 0: WDT value is not is equal to 0.

CONFIDENTIAL

8.8.7 Watch Dog Timer Configuration Register (Index=72h, Default=001s0000b)

Bit	Description
7	**WDT Time-out Value Select 1** 1: Second 0: Minute
6	**WDT Output through KRST (pulse) Enable** 1: Enable 0: Disable
5	**WDT Time-out Value Extra Select** 1: 62.5ms x WDT Timer-out value (default = 3.5s) 0: Determined by WDT Time-out value select 1 (bit 7 of this register)
4	**WDT Output through PWRGD Enable** 1: Enable 0: Disable *During LRESET# this bit is selected by JP2 power-on strapping option.*
3-0	**Interrupt Level Select for WDT** Please refer to Table 8-9 Interrupt Level Mapping Table on page 59.

8.8.8 Watch Dog Timer Time-out Value (LSB) Register (Index=73h, Default=38h)

Bit	Description
7-0	**WDT Time-out Value 7-0**

8.8.9 Watch Dog Timer Time-out Value (MSB) Register (Index=74h, Default=00h)

Bit	Description
7-0	**WDT Time-out Value 15-8**

8.8.10 GPIO Pin Set 1, 2, 3, 4, and 5 Polarity Registers (Index=B0h, B1h, B2h, B3h and B4h, Default=00h)

These registers are to program the GPIO pin type for polarity inverting or non-inverting.

Bit	Description
7-0	**GPIO Polarity Select** 1: Inverting 0: Non-inverting

8.8.11 GPIO Pin Set 1, 2, 3, 4, 5 and 6 Pin Internal Pull-up Enable Registers (Index=B8h, B9h, BAh, BBh, BCh, and BDh, Default=20h, 00h, 00h, 00h, 00h, and 00h)

These registers are to enable the GPIO pin internal pull-up except for GP56, GP57, GP60, and GP61, which have no internal pull-up.

Bit	Description
7-0	**GPIO Pin Internal Pull-up** 1: Enable 0: Disable

CONFIDENTIAL

CONFIDENTIAL

8.8.12 Simple I/O Set 1, 2, 3, 4 and 5 Enable Registers (Index=C0h, C1h, C2h, C3h and C4h, Default=01h, 00h, 00h, 00h, and 00h)

These registers are to select the function as the Simple I/O function or the Alternate function.

Bit	Description
7-0	1: Simple I/O function 0: Alternate function

8.8.13 Simple I/O Set 1, 2, 3, 4, 5 and 6 Output Enable Registers (Index=C8h, C9h, CAh, CBh, CCh, and CDh, Default=01h, 00h, 00h, 40h, 00h and 00h)

These registers are to determine the direction of the Simple I/O.

Bit	Description
7-0	0: Input mode 1: Output mode

8.8.14 Panel Button De-bounce 0 Input Pin Mapping Register (Index=E0h, Default=00h)

Bit	Description
7	**Reserved**
6	**IRQ Enable**
5-0	**Input Pin Location** Please refer to Table 8-10 Location Mapping Table on page 60.

8.8.15 Panel Button De-bounce 1 Input Pin Mapping Register (Index=E1h, Default=00h)

Bit	Description
7-6	**Reserved**
5-0	**Input Pin Location** Please refer to Table 8-10 Location Mapping Table on page 60.

8.8.16 IRQ External Routing 1-0 Input Pin Mapping Registers (Index=E3h-E2h, Default=00h)

Bit	Description
7	**Reserved**
6	**IRQ Enable**
5-0	**Input Pin Location** Please refer to Table 8-10 Location Mapping Table on page 60.

8.8.17 IRQ External Routing 1-0 Interrupt Level Selection Registers (Index=E4h, Default=00h)

Bit	Description
7-4	**Interrupt Level Select for IRQ External Routing 1** Please refer to Table 8-9 Interrupt Level Mapping Table on page 59.
3-0	**Interrupt Level Select for IRQ External Routing 0** Please refer to Table 8-9 Interrupt Level Mapping Table on page 59.

CONFIDENTIAL

CONFIDENTIAL

8.8.18 SMI# Control Register 1 (Index=F0h, Default=00h)

Bit	Description
7	**Reserved**
6	This bit is to enable the generation of an SMI# due to KBC(Mouse)'s IRQ (EN_MIRQ).
5	This bit is to enable the generation of an SMI# due to KBC(Keyboard)'s IRQ (EN_KIRQ).
4	This bit is to enable the generation of an SMI# due to Environment Controller's IRQ (EN_ECIRQ).
3-2	**Reserved**
1	This bit is to enable the generation of an SMI# due to Serial Port 1's IRQ (EN_S1IRQ).
0	**Reserved**

8.8.19 SMI# Control Register 2 (Index=F1h, Default=00h)

Bit	Description
7	**Reserved**
6	0: Edge trigger 1: Level trigger
5-3	**Reserved**
2	This bit is to enable the generation of an SMI# due to WDT's IRQ (EN_WDT).
1	This bit is to enable the generation of an SMI# due to CIR's IRQ (EN_CIR).
0	This bit is to enable the generation of an SMI# due to PBD's IRQ (EN_PBD).

8.8.20 SMI# Status Register 1 (Index=F2h, Default=00h)

This register is used to read the status of SMI# inputs.

Bit	Description
7	**Reserved**
6	**KBC (PS/2 Mouse)'s IRQ**
5	**KBC(Keyboard)'s IRQ**
4	**Environment Controller's IRQ**
3-2	**Reserved**
1	**Serial Port 1's IRQ**
0	**Reserved**

8.8.21 SMI# Status Register 2 (Index=F3h, Default=00h)

This register is used to read the status of SMI# inputs.

Bit	Description
7-6	**Panel Button De-bounce Status 1-0** Writing 1 will reset the status. 0: None detected 1: Detected
5-3	**Reserved**
2	**WDT's IRQ**
1	**CIR's IRQ**

CONFIDENTIAL

0	**PBD's IRQ**

CONFIDENTIAL

8.8.22 SMI# Pin Mapping Register (Index=F4h, Default=00h)

Bit	Description
7-6	**Reserved**
5-0	**SMI# Pin Location** Please refer to Table 8-10 Location Mapping Table on page 60.

8.8.23 Hardware Monitor Thermal Output Pin Mapping Register (Index=F5h, Default=00h)

Bit	Description
7-6	**Reserved**
5-0	**Thermal Output Pin Location** Please refer to Table 8-10 Location Mapping Table on page 60.

8.8.24 Hardware Monitor Alert Beep Pin Mapping Register (Index=F6h, Default=00h)

Bit	Description
7-6	**Reserved**
5-0	**Alert Beep Pin Location** Please refer to Table 8-10 Location Mapping Table on page 60.

8.8.25 Keyboard Lock Pin Mapping Register (Index=F7h, Default=00h)

Bit	Description
7-6	**Reserved**
5-0	**Keyboard Lock Pin Location** Please refer to Table 8-10 Location Mapping Table on page 60.

8.8.26 GP LED Blinking 1 Pin Mapping Register (Index=F8h, Default=00h)

Bit	Description
7-6	**Reserved**
5-0	**GP LED Blinking 1 Location** Please refer to Table 8-10 Location Mapping Table on page 60.

8.8.27 GP LED Blinking 1 Control Register (Index=F9h, Default=00h)

Bit	Description
7-4	**Reserved**
3	**GP LED Blinking 1 Short Low Pulse Enable**
2-1	**GP LED 1 Frequency Control** 00: 4 Hz 01: 1 Hz 10: 1/4 Hz 11: 1/8 Hz
0	**GP LED Blinking 1 Output Low Enable**

CONFIDENTIAL

8.8.28 GP LED Blinking 2 Pin Mapping Register (Index=FAh, Default=00h)

Bit	Description
7-6	**Reserved**
5-0	**GP LED Blinking 2 Location** Please refer to Table 8-10 Location Mapping Table on page 60.

8.8.29 GP LED Blinking 2 Control Register (Index=FBh, Default=00h)

Bit	Description
7-4	**Reserved**
3	**GP LED Blinking 2 Short Low Pulse Enable**
2-1	**GP LED 2 Frequency Control** 00: 4 Hz 01: 1 Hz 10: 1/4 Hz 11: 1/2 Hz
0	**GP LED Blinking 2 Output Low Enable**

CONFIDENTIAL

8.9 Consumer IR Configuration Registers (LDN=0Ah)

8.9.1 Consumer IR Activate (Index=30h, Default=00h)

Bit	Description
7-1	**Reserved**
0	**Consumer IR Enable** 1: Enable 0: Disable

8.9.2 Consumer IR Base Address MSB Register (Index=60h, Default=03h)

Bit	Description
7-4	**Read only** with "0h" for Base Address[15:12]
3-0	**Read/write**, mapped as Base Address[11:8]

8.9.3 Consumer IR Base Address LSB Register (Index=61h, Default=10h)

Bit	Description
7-3	**Read/write**, mapped as Base Address[7:3]
2-0	**Read only** as "000b"

8.9.4 Consumer IR Interrupt Level Select (Index=70h, Default=0Bh)

Bit	Description
7-4	**Reserved** with default "0h"
3-0	**Interrupt Level Select for Consumer IR** Please refer to Table 8-9 Interrupt Level Mapping Table.

8.9.5 Consumer IR Special Configuration Register (Index=F0h, Default=06h)

Bit	Description
7-1	**Reserved** with default "00h"
0	**IRQ Type** 1: IRQ sharing 0: Normal

Table 8-9 Interrupt Level Mapping Table

Value	Description
Fh-Dh	Not Valid
Ch	IRQ12
3h	IRQ3
2h	Not Valid
1h	IRQ1
0h	No Interrupt Selected
Else	Not Valid

CONFIDENTIAL

Table 8-10 Location Mapping Table

Location	Description
001 000	GP10 (Pin 42). Powered by 3VSB.
001 010	GP12 (Pin 10).
010 010	GP22 (Pin 8). Powered by 3VSB.
010 011	GP23 (Pin 7). Powered by 3VSB.
011 000	GP30 (Pin 6).
011 001	GP31 (Pin 64).
011 010	GP32 (Pin 63).
011 011	GP33 (Pin 62).
011 110	GP36 (Pin 4).
011 111	GP37 (Pin 3).
100 000	GP40 (Pin 37). Powered by 3VSB.
100 001	GP41 (Pin 60). Powered by 3VSB.
100 010	GP42 (Pin 34). Powered by 3VSB.
100 011	GP43 (Pin 33). Powered by 3VSB.
100 100	GP44 (Pin 31). Powered by 3VSB.
100 101	GP45 (Pin 58). Powered by 3VSB.
101 000	GPO50 (Pin 23).
101 001	GP51 (Pin 2).
101 010	GP52 (Pin 1).
101 011	GP53 (Pin 35). Powered by 3VSB.
101 100	GP54 (Pin 32). Powered by 3VSB.
101 101	GP55 (Pin 43). Powered by 3VSB.
101 110	GP56 (Pin 41).
101 111	GP57 (Pin 40).
Else	Reserved

CONFIDENTIAL

9. Functional Description

9.1 LPC Interface

The IT8772E supports the peripheral side of the LPC I/F as described in the LPC Interface Specification Rev.1.1. In addition to the required signals (LAD3-0, LFRAME#, LRESET#, LCLK (the same as PCICLK.)), the IT8772E also supports LDRQ#, SERIRQ and PME#.

9.1.1 LPC Transactions

The IT8772E supports the required transfer cycle types described in the LPC I/F specification. I/O read and I/O write cycles are used for the programmed I/O cycles.

For LPC host I/O read or write transactions, the Super I/O module processes a positive decoding, and the LPC interface can respond to the result of the current transaction by sending out SYNC values on LAD[3:0] signals or leave LAD[3:0] tri-state depending on its result.

CONFIDENTIAL

9.2 Serialized IRQ

The IT8772E follows the specification of Serialized IRQ Support for PCI System, Rev. 6.0, September 1, 1995, to support the serialized IRQ feature, and is able to interface most PC chipsets. The IT8772E encodes the parallel interrupts to an SERIRQ which will be decoded by the chipset with built-in Interrupt Controllers (two 8259 compatible modules).

9.2.1 Continuous Mode

When in the Continuous mode, the SIRQ host initiates the Start frame of each SERIRQ sequence after sending out the Stop frame by itself. (The next Start frame may or may not begin immediately after the turn-around state of the current Stop frame.) The SERIRQ is always activated and SIRQ host keeps polling all the IRQn and system events, even though no IRQn status is changed. The SERIRQ enters the Continuous mode following a system reset.

9.2.2 Quiet Mode

In the Quiet mode, when the situation that one SIRQ Slave detects its input IRQn/events have been changed happens, it may initiate the first clock of Start frame. The SIRQ host can then follow to complete the SERIRQ sequence. In the Quiet mode, the SERIRQ has no activity following the Stop frame until it is initiated by SIRQ Slave, which implies low activity = low mode power consumption.

9.2.3 Waveform Samples of SERIRQ Sequence

Figure 9-1. Start Frame Timing

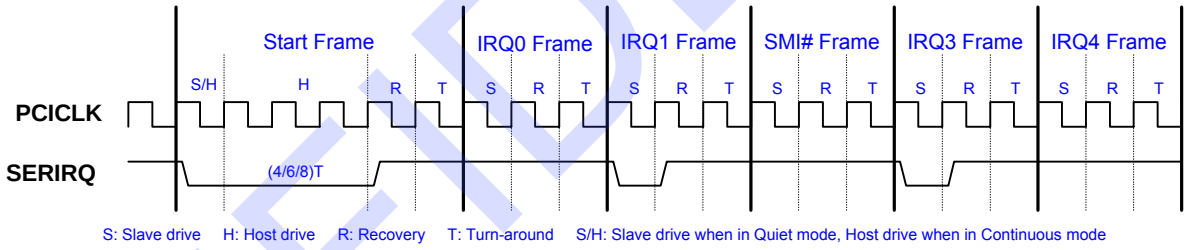

Figure 9-2. Stop Frame Timing

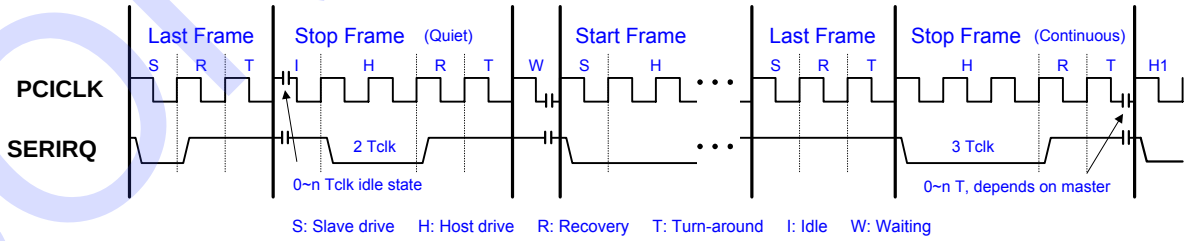

CONFIDENTIAL

9.2.4 SERIRQ Sampling Slot

Slot Number	IRQn/ Events	#of Clocks Past Start	IT8772E
1	IRQ0	2	-
2	IRQ1	5	Y
3	SMI#	8	Y
4	IRQ3	11	Y
5	IRQ4	14	Y
6	IRQ5	17	Y
7	IRQ6	20	Y
8	IRQ7	23	Y
9	IRQ8	26	Y
10	IRQ9	29	Y
11	IRQ10	32	Y
12	IRQ11	35	Y
13	IRQ12	38	Y
14	IRQ13	41	-
15	IRQ14	44	Y
16	IRQ15	47	Y
17	IOCHCK#	50	-
18	INTA#	53	-
19	INTB#	56	-
20	INTC#	59	-
21	INTD#	62	-
32:22	Unassigned	95 / 65	-

CONFIDENTIAL

9.3 General Purpose I/O

The IT8772E provides eight sets of flexible I/O control and special functions for the system designers via a set of multi-functional General Purpose I/O pins (GPIO). The GPIO functions will not be performed unless the related enable bits of the GPIO Multi-function Pin Selection registers (Index 25h, 26h, 27h, 28h and 29h of the Global Configuration Registers) are set. The GPIO functions include the simple I/O function and alternate function, and the function selection is determined by the Simple I/O Enable Registers (LDN=07h, Index=C0h, C1h, C2h, C3h and C4h).

The Simple I/O function includes a set of registers, which correspond to the GPIO pins. All control bits are divided into eight registers. The accessed I/O ports are programmable and are eight consecutive I/O ports (Base Address+0, Base Address+1, Base Address+2, Base Address+3, Base Address+4, Base Address+5). Base Address is programmed on the registers of GPIO Simple I/O Base Address LSB and MSB registers (LDN=07h, Index=62h and 63h).

The Alternate function provides several special functions for users, including Watch Dog Timer, SMI# output routing, External Interrupt routing, Panel Button De-bounce, Keyboard Lock input routing, LED Blinking, Thermal output routing, and Beep output routing. The last two are sub-functions of the Hardware Monitor. (GPIO set 6 supports the simple I/O function only.)

The Panel Button De-bounce is an input function. After it is enabled, a related status bit will be set when an active low pulse is detected on the GPIO pin. The status bits will be cleared by writing 1's to them. Panel Button De-bounce Interrupt will be issued if any of the status bit is set. However, the newly set status will not issue another interrupt unless the previous status bit is cleared before being set.

The Key Lock function locks the keyboard to inhibit the keyboard interface. The way of programming is to set bit 2 on the register Index F0h of KBC(Keyboard) (LDN=5). The pin location mapping, Index F7h also must be programmed correctly.

The Blinking function provides a low frequency blink output. By connecting to some external components, it can be used to control a power LED. There are several frequencies for selection.

The Watch Dog Timer (WDT) function is constituted by a time counter, a time-out status register, and the timer reset control logic. The time-out status bit may be mapped to an interrupt or KRST# through the WDT configuration register. The WDT has a programmable time-out ranging from 1 to 65535 minutes or 1 to 65535 seconds. The unit, either a minute or a second, is also programmable via bit 7 of the WDT configuration register. When the WDT Time-out Value register is set to a non-zero value, the WDT loads the value and begin counting down from the value. When the value reaches to 0, the WDT status register will be set. There are several system events including a CIR interrupt, a Keyboard Interrupt, a Mouse Interrupt that can reload the non-zero value into the WDT. The effect on the WDT for each of the events may be enabled or disabled through bits in the WDT control register. No matter what the value in the time counter is, the host may force a time-out to occur by writing a "1" to bit 1 of the WDT configuration register.

The External Interrupt routing function provides a useful feature for motherboard designers. Through this function, the parallel interrupts of other on-board devices can be easily re-routed into the Serial IRQ.

The SMI# is a non-maskable interrupt dedicated to the transparent power management. It consists of different enabled interrupts generated from each of the functional blocks in the IT8772E. The interrupts are redirected as the SMI# output via the SMI# Control Register 1 and SMI# Control Register 2. The SMI# Status Register 1 and 2 are used to read the status of the SMI input event. All the SMI# Status Register bits can be cleared when the corresponding source events become invalidated. These bits can also be cleared by writing 1 to bit 7 of SMI# Control Register 2 no matter whether the events of the corresponding sources are invalidated or not. The SMI# events can be programmed as the pulse mode or level mode whenever an SMI# event occurs. The logic equation of the SMI# event is described below:

CONFIDENTIAL

SMI# event = (EN_S1IRQ and S1IRQ) or (EN_EC and EC_SMI) or (EN_PBDIRQ or PBDIRQ) or (EN_KIRQ and KIRQ) or (EN_MIRQ and MIRQ) or (EN_CIR and CIR_IRQ) or (EN_WDT and WDT_IRQ)

CONFIDENTIAL

Figure 9-3. General Logic of GPIO Function

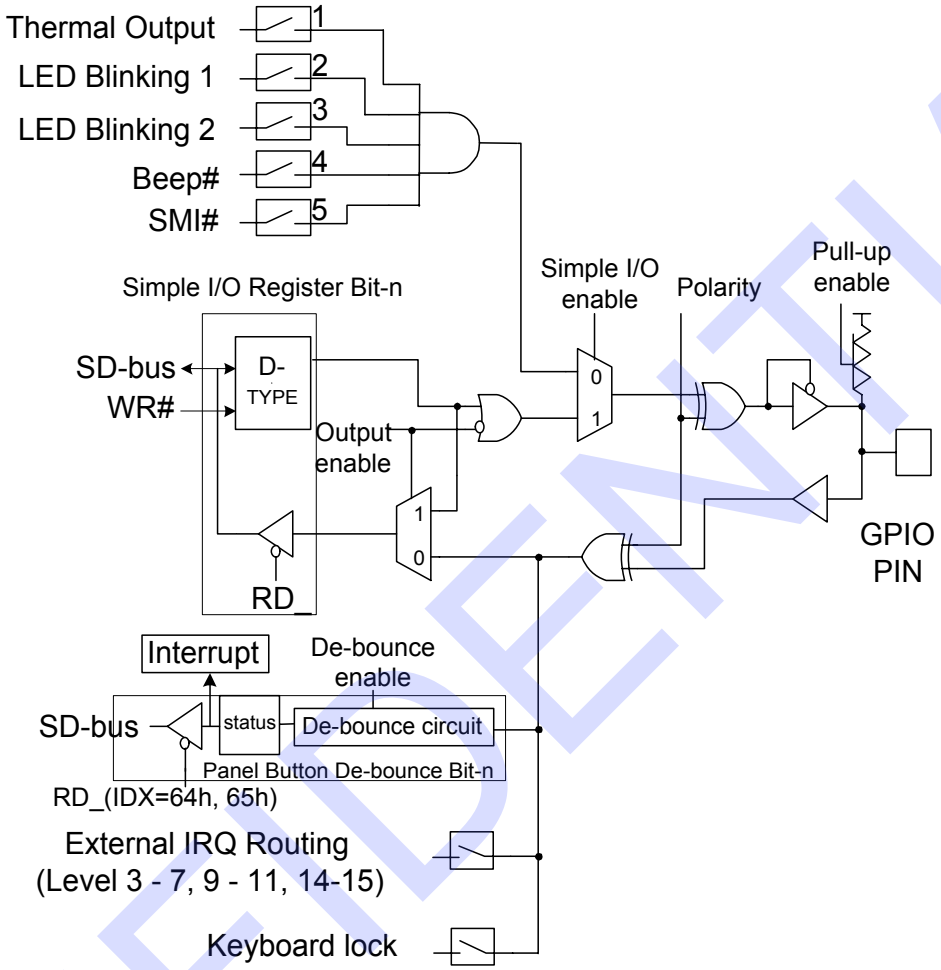

CONFIDENTIAL

9.4 Advanced Power Supply Control and Power Management Event (PME#)

The circuit for advanced power supply control (APC) provides power-up events including Keyboard, Mouse, CIR and RI1#. When any of these events is activated, PWRON# will perform a low state until AVCC3 is switched to the ON state.
Here are the details of these events:

1. Detection of KCLK edge or special pattern of KCLK and KDAT. The special pattern of KCLK means pressing pre-set key string sequentially, and KDAT means pressing pre-set keys simultaneously.
2. Detection of MCLK edge or special pattern of MCLK and MDAT. The special pattern of MCLK and MDAT means clicking on any mouse button twice sequentially.
3. Receiving CIR pattern matches the previous one stored at the APC/PME Special Code Index and Data Register.
4. Detection of RI1# falling edge.

The PANSWH# and PSON# are especially designed for the system. PANSWH# serves as a main power switch input, which is wire-AND to the APC output PWRON#. PSON# is the ATX Power control output, which is a power-failure gating circuit. The power-failure gating circuit is responsible for gating the SUSB# input until PANSWH# becomes active when the 3VSB is switched from OFF to ON.

The power-failure gating circuit can be disabled by setting the APC/PME Control Register 2 (LDN=04h, index F4h, bit 5). The gating circuit also provides an auto-restore function. After bit 5 of PCR1 is set, the previous PSON# state will be restored when the 3VSB is switched from OFF to ON.

The Mask PWRON# Activation bit (bit 4 of PCR 1) is used to mask all power-up events except switch-on event when the 3VSB state is just switched from FAIL to OFF. In other words, when this bit is set and the power state is switched from FAIL to OFF, the only validated function is PANSWH#.

The PCR2 register is responsible for determining the keyboard power-up event and APC conditions. Bit 4 is used to mask the PANSWH# power-on event on the PWRON# pin. To enable this bit, the keyboard power-up event should be enabled and set by (1) pressing pre-set key string sequentially or (2) stroking pre-set keys simultaneously. The APC/PME# special code index and data registers are used to specify the special key codes in the special power-up events of (1) pressing pre-set key string sequentially or (2) stroking pre-set keys simultaneously.

A CIR event is generated if the input CIR RX pattern is the same as that previously stored at PME Special Code Index and Data Registers (LDN=04h, Index=F5h and F6h). The total maximum physical codes are nineteen bytes (from Index 20h to 32h). The first byte (Index 20h) is used to specify the pattern length (in bytes). Bit 7-4 are used when AVCC3 is on and Bit 3-0 when AVCC3 goes OFF. The length represented in each 4-bit will be incremented by 3 internally as the actual length is to be compared. For most of the CIR protocols, the first several bytes are always the same for each key (or pattern). The differences are always in the last several bytes. Thus, the system designer can program the IT8772E to generate a CIR PME# event as any keys when AVCC3 is ON and a special key (i.e. POWER-ON) when AVCC3 is OFF.

All APC registers (Index=F0h, F2h, F4h, F5h, F6h, FAh and FBh) are powered by back-up power (VBAT) when 3VSB is OFF.

PME# is used to wake up the system from low-power states (S1-S5).There will be five events of APC to generate PME#. A falling edge on these pins issues PME# events if the enable bits are set.

CONFIDENTIAL

9.5 Environment Controller

The Environment Controller (EC), built in the IT8772E, includes seven voltage inputs, two temperature sensor inputs, two fan tachometer inputs, and two sets of advanced fan controllers. The EC monitors the hardware environment and implements the environmental control for personal computers.
The IT8772E contains an 8-bit ADC (Analog-to-Digital Converter), which is responsible for monitoring the voltages and temperatures. The ADC converts the analog inputs ranging from 0V to 3.072V to 8-bit digital byte. With additional external components, the analog inputs can be made to monitor different voltage ranges, in addition to monitoring the fixed input range of 0V to 3.072V. Through external thermistors or thermal diodes, the temperature sensor inputs can be converted into 8-bit digital byte, enabling the sensor inputs to monitor the temperature of various components. A built-in ROM is also provided to adjust the non-linear characteristics of thermistors.

FAN Tachometer inputs are digital inputs with an acceptable range from 0V to 5V, and are responsible for measuring the FAN's Tachometer pulse periods.
The EC of the IT8772E provides multiple internal registers and an interrupt generator for programmers to monitor the environment and control the FANs. Both of the LPC Bus and Serial Bus interfaces are supported to accommodate the needs for various applications.

9.5.1 Interface

LPC Bus: The Environment Controller of the IT8772E decodes two addresses.

Table 9-1. Address Map on LPC Bus

Register or Port	Address
Address register of EC	Base+05h
Data register of EC	Base+06h

Note 1: The Base Address is determined by the Logical Device configuration registers of the Environment Controller (LDN=04h, registers index=60h, 61h).

To access an EC register, the address of the register is written to the address port (Base+05h). Read or write data from or to that register via data port (Base+06h).

9.5.2 Registers

9.5.2.1 Address Port (Base+05h, Default=00h)

Bit	Description
7	**Outstanding; read only** This bit is set when a data write is performed to Address Port via the LPC Bus.
6-0	**Index** Internal Address of RAM and Registers.

CONFIDENTIAL

Table 9-2. Environment Controller Registers

Index	R/W	Default	Registers or Action
00h	R/W	18h	Configuration Register
01h	R	00h	Interrupt Status Register 1
02h	R	00h	Interrupt Status Register 2
03h	R	00h	Interrupt Status Register 3
04h	R/W	00h	SMI# Mask Register 1
05h	R/W	00h	SMI# Mask Register 2
06h	R/W	00h	SMI# Mask Register 3
07h	R/W	00h	Interrupt Mask Interrupt Mask 1
08h	R/W	00h	Interrupt Mask Interrupt Mask 2
09h	R/W	80h	Interrupt Mask Interrupt Mask 3
0Ah	R/W	48h	Interface Selection Register
0Bh	R/W	0Fh	Fan PWM Smoothing Step Frequency Selection Register
0Ch	R/W	00h	Fan Tachometer Control Register
0Eh	R	-	Fan Tachometer 2 Reading Register
0Fh	R	-	Fan Tachometer 3 Reading Register
11h	R/W	-	Fan Tachometer 2 Limit Register
12h	R/W	-	Fan Tachometer 3 Limit Register
13h	R/W	07h	Fan Controller Main Control Register
14h	R/W	40h	FAN_CTL Control Register
15h	R/W	00h	FAN_CTL1 PWM Control Register
16h	R/W	00h	FAN_CTL2 PWM Control Register
17h	R/W	00h	FAN_CTL3 PWM Control Register
19h	R	-	Fan Tachometer 2 Extended Reading Register
1Ah	R	-	Fan Tachometer 3 Extended Reading Register
1Ch	R/W	-	Fan Tachometer 2 Extended Limit Register
1Dh	R/W	-	Fan Tachometer 3 Extended Limit Register
20h	R	-	VIN0 Voltage Reading Register
21h	R	-	VIN1 Voltage Reading Register
22h	R	-	VIN2 Voltage Reading Register
23h	R	-	VIN3 Voltage Reading Register
24h	R	-	VIN4 Voltage Reading Register
28h	R	-	VBAT Voltage Reading Register
29h	R	-	TMPIN1 Temperature Reading Register
2Ah	R	-	TMPIN2 Temperature Reading Register
2Bh	R	-	TMPIN3 Temperature Reading Register

CONFIDENTIAL

Index	R/W	Default	Registers or Action
30h	R/W	-	VIN0 High Limit Register
31h	R/W	-	VIN0 Low Limit Register
32h	R/W	-	VIN1 High Limit Register
33h	R/W	-	VIN1 Low Limit Register
34h	R/W	-	VIN2 High Limit Register
35h	R/W	-	VIN2 Low Limit Register
36h	R/W	-	VIN3 High Limit Register
37h	R/W	-	VIN3 Low Limit Register
38h	R/W	-	VIN4 High Limit Register
39h	R/W	-	VIN4 Low Limit Register
3Eh	R/W	-	VIN7 High Limit Register
3Fh	R/W	-	VIN7 Low Limit Register
40h	R/W	-	TMPIN1 High Limit Register
41h	R/W	-	TMPIN1 Low Limit Register
42h	R/W	-	TMPIN2 High Limit Register
43h	R/W	-	TMPIN2 Low Limit Register
44h	R/W	-	TMPIN3 High Limit Register
45h	R/W	-	TMPIN3 Low Limit Register
50h	R/W	00h	ADC Voltage Channel Enable Register
51h	R/W	00h	ADC Temperature Channel Enable Register
52h	R/W	7Fh	TMPIN1 Thermal Output Limit Register
53h	R/W	7Fh	TMPIN2 Thermal Output Limit Register
54h	R/W	7Fh	TMPIN3 Thermal Output Limit Register
55h	R/W	40h	ADC Temperature Extra Channel Enable Register
56h	R/W	00h	Thermal Diode 1 Zero Degree Adjust Register
57h	R/W	00h	Thermal Diode 2 Zero Degree Adjust Register
58h	R	90h	ITE Vendor ID Register
59h	R/W	00h	Thermal Diode 3 Zero Degree Adjust Register
5Bh	R	12h	Core ID Register
5Ch	R/W	60h	Beep Event Enable Register
5Dh	R/W	00h	Beep Frequency Divisor of Fan Event Register
5Eh	R/W	00h	Beep Frequency Divisor of Voltage Event Register
5Fh	R/W	00h	Beep Frequency Divisor of Temperature Event Register
68h	R/W	7Fh	FAN_CTL2 SmartGuardian Automatic Mode Temperature Limit of OFF Register
69h	R/W	7Fh	FAN_CTL2 SmartGuardian Automatic Mode Temperature Limit of Fan Start Register

CONFIDENTIAL

Index	R/W	Default	Registers or Action
6Ah	R/W	7Fh	FAN_CTL2 SmartGuardian Automatic Mode Temperature Limit of Full Speed Register
6Bh	R/W	00h/80h	FAN_CTL2 SmartGuardian Automatic Mode Start PWM Register
6Ch	R/W	00h	FAN_CTL2 SmartGuardian Automatic Mode Control Register
6Dh	R/W	7Fh	FAN_CTL2 SmartGuardian Automatic Mode △-Temperature Register
6Eh	R/W	0Fh	FAN_CTL2 Target Zone Register
70h	R/W	7Fh	FAN_CTL3 SmartGuardian Automatic Mode Temperature Limit of OFF Register
71h	R/W	7Fh	FAN_CTL3 SmartGuardian Automatic Mode Temperature Limit of Fan Start Register
72h	R/W	7Fh	FAN_CTL3 SmartGuardian Automatic Mode Temperature Limit of Full Speed Register
73h	R/W	00h/80h	FAN_CTL3 SmartGuardian Automatic Mode Start PWM Register
74h	R/W	00h	FAN_CTL3 SmartGuardian Automatic Mode Control Register
75h	R/W	7Fh	FAN_CTL3 SmartGuardian Automatic Mode △-Temperature Register
76h	R/W	0Fh	FAN_CTL3 Target Zone Register
88h	R/W	-00h	External Temperature Sensor Host Status Register
89h	R/W	00h	External Temperature Sensor Host Target Address Register
8Ah	R/W	00h	External Temperature Sensor Host Write Length Register
8Bh	R/W	00h	External Temperature Sensor Host Read Length Register
8Ch	R/W	00h	External Temperature Sensor Host Command (Write Data 1) Register
8Dh	R/W	00h	External Temperature Sensor Write Data (2-8) Register
8Eh	R/W	02h	External Temperature Sensor Host Control Register
8Fh	R	--h	External Temperature Sensor Read Data (1-16) Register
90h	R/W	FFh	Special FAN Control Mode Extra Vector A Temperature Limit of Fan Start Register
91h	R/W	00h	Special FAN Control Mode Extra Vector A Slope Register
92h	R/W	00h	Special FAN Control Mode Extra Vector A △-Temperature Register
93h	R/W	00h	Special FAN Control Mode Extra Vector A Range Register
94h	R/W	FFh	Special FAN Control Mode Extra Vector B Temperature Limit of Fan Start Register
95h	R/W	00h	Special FAN Control Mode Extra Vector B Slope Register
96h	R/W	00h	Special FAN Control Mode Extra Vector B △-Temperature Register
97h	R/W	00h	Special FAN Control Mode Extra Vector B Range Register
98h	R/W	40h	PCH/AMDTSI Host Status Register
99h	R/W	00h	PCH/AMDTSI Host Target Address Register
9Ch	R/W	00h	PCH/AMDTSI Host Command Register
9Dh	R/W	--h	PCH/AMDTSI Write Data Register

CONFIDENTIAL

Index	R/W	Default	Registers or Action
9Eh	R/W	02h	PCH/AMDTSI Host Control Register
9Fh	R/W	--h	PCH/AMDTSI Read Data (1-16) Register

CONFIDENTIAL

9.5.2.2 Register Description

9.5.2.2.1 Configuration Register (Index=00h, Default=18h)

Bit	R/W	Description
7	R/W	**Initialization** A "1" restores all registers to their individual default values, except the Serial Bus Address register. This bit clears itself when the default value is "0".
6	R/W	**Update VBAT Voltage Reading**
5	R/W	**COPEN# Cleared** Write "1" to clear COPEN#. **Note:** The COPEN# status register (Index 01h<bit4>) will be cleared when first writing this register and then reading Index 01h<bit4>.
4	R	**Read only; always "1"**
3	R/W	**INT_Clear** A "1" disables the SMI# and IRQ outputs while the contents of interrupt status bits remain unchanged.
2	R/W	**IRQ Enable** This bit is to enable the IRQ Interrupt output.
1	R/W	**SMI# Enable** A "1" enables the SMI# Interrupt output.
0	R/W	**Start** A "1" enables the startup of monitoring operations and a "0" sets the monitoring operation in the STANDBY mode.

9.5.2.2.2 Interrupt Status Register 1 (Index=01h, Default=00h)

Reading this register will clear itself following a read access.

Bit	R/W	Description
7	R	**Reserved**
6	R	A "1" indicates the FAN_TAC5 Count limit has been reached.
5	R	**Reserved**
4	R	**COPEN# Status** A "1" indicates a Case Open event has occurred. **Note:** The COPEN# status register (Index 01h<bit4>) will be cleared when first writing Index 00h<bit5> and then reading this register.
3	R	**Reserved**
2-1	R	A "1" indicates the FAN_TAC3-2 Count limit has been reached.
0	R	**Reserved**

9.5.2.2.3 Interrupt Status Register 2 (Index=02h, Default=00h)

Reading this register will clear itself after the read operation is completed.

Bit	R/W	Description
7-0	R	A "1" indicates a High or Low limit of VIN7-0 has been reached. **Note:** Bit 5、6 are reserved

CONFIDENTIAL

9.5.2.2.4 Interrupt Status Register 3 (Index=03h, Default=00h)

Reading this register will clear itself following a read access.

Bit	R/W	Description
7-3	R	**Reserved**
2-0	R	A “1” indicates a High or Low limit of Temperature 3-1 has been reached.

9.5.2.2.5 SMI# Mask Register 1 (Index=04h, Default=00h)

Bit	R/W	Description
7-5	R/W	**Reserved**
4	R/W	A “1” disables the Case Open Intrusion interrupt status bit for SMI#.
3	R/W	**Reserved**
2-1	R/W	A “1” disables the FAN_TAC3-2 interrupt status bit for SMI#.
0	R/W	**Reserved**

9.5.2.2.6 SMI# Mask Register 2 (Index=05h, Default=00h)

Bit	R/W	Description
7-0	R/W	A “1” disables the VIN7-0 interrupt status bit for SMI#. Note: Bit 5、6 are reserved. Please refer to section 9.5.2.2.21

9.5.2.2.7 SMI# Mask Register 3 (Index=06h, Default=00h)

Bit	R/W	Description
7-3	R/W	**Reserved**
2-0	R/W	A “1” disables the Temperature 3-1 interrupt status bit for SMI#.

9.5.2.2.8 Interrupt Mask Register 1 (Index=07h, Default=00h)

Bit	R/W	Description
7-5	R/W	**Reserved**
4	R/W	A “1” disables the Case Open Intrusion interrupt status bit for IRQ.
3	R/W	**Reserved**
2-1	R/W	A “1” disables the FAN_TAC3-2 interrupt status bit for IRQ.
0	R/W	**Reserved**

9.5.2.2.9 Interrupt Mask Register 2 (Index=08h, Default=00h)

Bit	R/W	Description
7-0	R/W	A “1” disables the VIN7-0 interrupt status bit for IRQ. Note: Bit 5、6 are reserved. Please refer to section 9.5.2.2.29

9.5.2.2.10 Interrupt Mask Register 3 (Index=09h, Default=80h)

Bit	R/W	Description
7	R/W	A “1” disables the External Thermal Sensor interrupt.

CONFIDENTIAL

6-3	R/W	**Reserved**
2-0	R/W	A “1” disables the Temperature 3-1 interrupt status bit for IRQ.

9.5.2.2.11 Interface Selection Register (Index=0Ah, Default=48h)

Bit	R/W	Description
7	R/W	**Pseudo-EOC (End of Conversion of ADC)** A Pseudo-EOC bit can speed up the setup time of FAN speed in the SmartGuardian automatic mode. (Write 1 to the bit then write 0.)
6	R/W	**External Thermal Sensor SMB Host Enable** 0: SMB Disable 1: SMB Enable
5-4	R/W	**SST/PECI Selection** 00: Disable 01: SST Slave Device 10: PECI 11: SST Host
3	R/W	**SST/PECI Host Controller Clock Selection** 0: 32MHz generated internally 1: 24MHz
2	R/W	**SST/PECI Host Controller (Auto Speed No-change Tolerance) t-bit 1 Setting** 0: (2 host clocks) no less than 1 host clock 1: (1 host clock) less than 1 host clock
1	R/W	**Reserved** This bit must be set to “0b”
0	R/W	**PECI 2.0/3.0 Host Controller Hardware AWFCS Enable** 0: Disable 1: Enable

9.5.2.2.12 Fan PWM Smoothing Step Frequency Selection Register (Index=0Bh, Default=0Fh)

Bit	R/W	Description
7-6	R/W	**FAN PWM Smoothing Step Frequency Selection** 00: 1Hz 01: 16Hz 10: 8Hz 11: 4Hz
5-0	R/W	**Reserved** Must be “000000b”

9.5.2.2.13 Fan Tachometer Control Register (Index=0Ch, Default=00h)

Bit	R/W	Description
7	R/W	**TMPIN3 Enhanced Interrupt Mode Enable** 0: Original mode 1: The interrupt will be generated when TMPIN3 is higher than the high limit or lower than the low limit.
6	R/W	**TMPIN2 Enhanced Interrupt Mode Enable** 0: Original mode 1: The interrupt will be generated when TMPIN2 is higher than the high limit or lower than the low limit.

CONFIDENTIAL

Bit	R/W	Description
3	R/W	**TMPIN1 Enhanced Interrupt Mode Enable** 0: Original mode 1: The interrupt will be generated when TMPIN1 is higher than the high limit or lower than the low limit.
25-0	R/W	**Reserved**

CONFIDENTIAL

9.5.2.2.14 Fan Tachometer 2-3 Reading Registers (Index=0Eh-0Fh)

Bit	R/W	Description
7-0	R	**Count Number of Internal Clock per Revolution**

9.5.2.2.15 Fan Tachometer 2-3 Limit Registers (Index=11h-12h)

Bit	R/W	Description
7-0	R/W	**Limit Value**

9.5.2.2.16 Fan Controller Main Control Register (Index=13h, Default=07h)

Bit	R/W	Description
7	R	**Reserved**
6-5	R/W	**FAN_TAC2-3 Enable** 0: Disable 1: Enable
4	R/W	**Reserved**
3	R/W	**Full Speed Control of FAN_CTL Automatic Mode** 0: The full speeds of FAN_CTL2-3 automatic mode are independent. 1: Both FAN_CTL2-3 will enter their respective full speeds when the temperature exceeds the full Speed Temperature Limit.
2-1	R/W	**FAN_CTL3-2 Output Mode Selection** 0: ON/OFF mode 1: SmartGuardian mode
0	R/W	**Reserved**

9.5.2.2.17 FAN_CTL Control Register (Index=14h, Default=40h)

Bit	R/W	Description
7	R/W	**FAN_CTL Polarity (for all FANs)** 0: Active low 1: Active high
6-4	R/W	**PWM Base Clock Select (for FAN3)** 000: 48MHz (PWM Frequency=187.5kHz) 001: 24MHz (PWM Frequency=93.75kHz) 010: 12MHz (PWM Frequency=46.87kHz) 011: 8MHz (PWM Frequency=31.25kHz) 100: 6MHz (PWM Frequency=23.43kHz) (Default) 101: 3MHz (PWM Frequency=11.7kHz) 110: 1.5MHz (PWM Frequency=5.86kHz) 111: 51kHz (PWM Frequency=200Hz)
3	R/W	**PWM Minimum Duty Select (for FAN3)** 0: 0 % For a given PWM value, the actual duty is PWM/256 X 100%. 1: 20 % For a given PWM value (except 00h), the actual duty is (PWM+64)/320 X 100%. If the given PWM value is 00h, the actual duty will be 0%.

CONFIDENTIAL

Bit	R/W	Description
2-0	R/W	**FAN_CTL ON/OFF Mode Control** These bits are only available when the relative output modes are selected in the ON/OFF mode. 0: OFF 1: ON

CONFIDENTIAL

9.5.2.2.18 FAN_CTL 2-3 PWM Control Register (Index=16h,17h, Default=00h)

Bit	R/W	Description
7	R/W	**FAN_CTL2-3 PWM Mode Automatic/Software Operation Selection** 0: Software operation 1: Automatic operation
6-0	R/W	**When bit 7=0:** **Bit 7-0 of Index 6Bh, 73h: 256 Steps of PWM Control When in Software Operation** **When bit 7=1:** **Bit 2: Tachometer Closed-loop Mode Enable Bit** 0: Disable 1: Enable **Bit 1-0: Temperature Input Selection** 00: TMPIN1 01: TMPIN2 10: TMPIN3 11: Reserved **Bit 6-3: Reserved**

9.5.2.2.19 Fan Tachometer 2-3 Extended Reading Registers (Index=19h-1Ah)

Bit	R/W	Description
7-0	R	**Count Number of Internal Clock per Revolution [15:8]**

9.5.2.2.20 Fan Tachometer 2-3 Extended Limit Registers (Index=1Ch-1Dh)

Bit	R/W	Description
7-0	R	**Limit Value [15:8]**

9.5.2.2.21 VIN5-0 Voltage Reading Registers (Index=25h-20h)

Bit	R/W	Description
7-0	R	**Voltage Reading Value** **Note:** For monitoring Internal AVCC3 If LDN7, Index 2Ch<bit 0>=1, AVCC3 voltage = VIN3 reading value * 2 * 12mV

9.5.2.2.22 3VSB Voltage Reading Registers (Index=27h)

Bit	R/W	Description
7-0	R	**Internal 3VSB Voltage Reading Value** The 3VSB voltage = reading value * 2 * 12mV

CONFIDENTIAL

9.5.2.2.23 VBAT Voltage Reading Register (Index=28h)

Bit	R/W	Description
7-0	R	**VBAT Voltage Reading Value** **Note:** The VBAT voltage = reading value * 2 * 12mV

9.5.2.2.24 TMPIN3-1 Temperature Reading Registers (Index=2Bh-29h)

Bit	R/W	Description
7-0	R	**Temperature Reading Value**

9.5.2.2.25 VIN7-0 High Limit Registers (Index=3Eh, 3Ch, 3Ah, 38h, 36h, 34h, 32h, 30h)

Bit	R/W	Description
7-0	R/W	**High Limit Value** **Note:** VIN5 and VIN 6 are reserved. Please refer to section 9.5.2.2.29 for the detail.

9.5.2.2.26 VIN7-0 Low Limit Registers (Index=3Fh, 3Dh, 3Bh, 39h, 37h, 35h, 33h, 31h)

Bit	R/W	Description
7-0	R/W	**Low Limit Value** **Note:** VIN5 and VIN 6 are reserved. Please refer to section 9.5.2.2.29 for the detail.

9.5.2.2.27 TMPIN3-1 High Limit Registers (Index=44h, 42h, 40h)

Bit	R/W	Description
7-0	R/W	**High Limit Value**

9.5.2.2.28 TMPIN3-1 Low Limit Registers (Index=45h, 43h, 41h)

Bit	R/W	Description
7-0	R/W	**Low Limit Value**

9.5.2.2.29 ADC Voltage Channel Enable Register (Index=50h, Default=00h)

Bit	R/W	Description
7-0	R/W	**ADC VIN7-0 Scan Enable** **Note 1:** IT8772E doesn't support VIN5 and VIN6 voltage sensor. **Note 2:** VIN3 for internal AVCC3 voltage sensor. **Note 3:** VIN7 for internal 3VSB voltage sensor

CONFIDENTIAL

9.5.2.2.30 ADC Temperature Channel Enable Register (Index=51h, Default=00h)

TMPIN3-1 cannot be enabled in both Thermal Resistor mode and Thermal Diode (Diode connected Transistor) mode.

Bit	R/W	Description
7-6	R/W	**SST/PECI Host Temperature Reading Report Register Selection** 00: None 01: TMPIN1 Temperature Reading Register.(Index 29h) 10: TMPIN2 Temperature Reading Register.(Index 2Ah) 11: TMPIN3 Temperature Reading Register.(Index 2Bh)
5	R/W	**Reserved**
4-3	R/W	TMPIN2-1 are enabled in the Thermal Resistor mode.
2	R/W	**Reserved**
1-0	R/W	TMPIN2-1 are enabled in the Thermal Diode (or Diode-connected Transistor) mode.

9.5.2.2.31 TMPIN2-1 Thermal Output Limit Registers (Index=53h-52h, Default=7Fh)

Bit	R/W	Description
7-0	R/W	**Thermal Output Limit Value**

9.5.2.2.32 ADC Temperature Extra Channel Enable Register (Index=55h, Default=40h)

Bit	R/W	Description
7	R/W	**Reserved**
6-4	R/W	**FAN_CTRL2 PWM Base Clock Select** 000: 48MHz (PWM Frequency=187.5kHz) 001: 24MHz (PWM Frequency=93.75kHz) 010: 12MHz (PWM Frequency=46.87kHz) 011: 8MHz (PWM Frequency=31.25kHz) 100: 6MHz (PWM Frequency=23.43kHz) (Default) 101: 3MHz (PWM Frequency=11.7kHz) 110: 1.5MHz (PWM Frequency=5.86kHz) 111: 51kHz (PWM Frequency=200Hz)
3	R/W	**FAN_CTRL2 PWM Minimum Duty Select** 0: 0 % For a given PWM value, the actual duty is PWM/256 X 100%. 1: 20 % For a given PWM value (except 00h), the actual duty is (PWM+64)/320 X 100%. If the given PWM value is 00h, the actual duty will be 0%.
2-0	R/W	VIN6-4 is enabled in the Thermal Resistor mode.

9.5.2.2.33 Thermal Diode Zero Degree Adjust 3-2 Registers (Index=59h, 57h, Default=00h)

These registers are **read only** unless bit 7 of 5Ch is set.

Bit	R/W	Description
7-0	R/W	**Thermal Diode Zero Degree Voltage Value**

9.5.2.2.34 Vendor ID Register (Index=58h, Default=90h)

CONFIDENTIAL

Bit	R/W	Description
7-0	R	**ITE Vendor ID; read Only**

9.5.2.2.35 Code ID Register (Index=5Bh, Default=12h)

Bit	R/W	Description
7-0	R	**ITE Vendor ID; read Only**

9.5.2.2.36 Beep Event Enable Register (Index=5Ch, Default=60h)

Bit	R/W	Description
7	R/W	**Thermal Diode Zero Degree Adjust Register Write Enable**
6-4	R/W	**ADC Clock Selection** 000: 500kHz 001: 250kHz 010: 125K 011: 62.5kHz 100: 31.25kHz 101: 24MHz 110: 1MHz(Default) 111: 2MHz
3	R/W	**Reserved**
2	R/W	This bit can enable the beep action when TMPINs exceed the limit
1	R/W	This bit can enable the beep action when VINs exceed the limit.
0	R/W	This bit can enable the beep action when FAN_TACs exceed the limit.

9.5.2.2.37 Beep Frequency Divisor of Fan Event Register (Index=5Dh, Default=00h)

Bit	R/W	Description
7-4	R/W	**Tone Divisor** Tone=500/(bits[7:4]+1)
3-0	R/W	**Frequency Divisor** Frequency=10K/(bits[3:0]+1)

9.5.2.2.38 Beep Frequency Divisor of Voltage Event Register (Index=5Eh, Default=00h)

Bit	R/W	Description
7-4	R/W	**Tone Divisor** Tone=500/(bits[7:4]+1).
3-0	R/W	**Frequency Divisor** Frequency=10K/(bits[3:0]+1)

9.5.2.2.39 Beep Frequency Divisor of Temperature Event Register (Index=5Fh, Default=00h)

Bit	R/W	Description
7-4	R/W	**Tone Divisor** Tone=500/(bits[7:4]+1)
3-0	R/W	**Frequency Divisor**

CONFIDENTIAL

		Frequency=10K/(bits[3:0]+1)

9.5.2.2.40 FAN_CTL3-2 SmartGuardian Automatic Mode Temperature Limit of OFF Registers (Index=70h, 68h, Default=7Fh)

Bit	R/W	Description
7-0	R/W	**Temperature Limit Value of Fan OFF**

CONFIDENTIAL

9.5.2.2.41 FAN_CTL3-2 SmartGuardian Automatic Mode Temperature Limit of Fan Start Registers (Index=71h, 69h, Default=7Fh)

Bit	R/W	Description
7-0	R/W	**Temperature Limit Value of Fan Start**

9.5.2.2.42 FAN_CTL3-2 SmartGuardian Automatic Mode Temperature Limit of Full Speed Registers (Index=72h, 6Ah, Default=7Fh)

Bit	R/W	Description
7-0	R/W	**Temperature Limit Value of Fan Full Speed**

9.5.2.2.43 FAN_CTL3-2 SmartGuardian Automatic Mode Start PWM Registers (Index=73h, 6Bh, Default=00h/80h)

The default value of these registers is selected by JP3

For Original Fan Control Mode:

Bit	R/W	Description
7-0	R/W	**When bit 7 of index 16h, 17h =0:** 256 Steps of PWM Control When in Software Operation **When bit 7 of index 16h, 17h =1:** PWM Value

For Tachometer Closed-loop Mode:

Bit	R/W	Description
7-0	R/W	**Initial Value of Target RPM** RPM = 16 * Bit[7:0]

9.5.2.2.44 FAN_CTL3-2 SmartGuardian Automatic Mode Control Registers (Index=74h, 6Ch, Default=00h)

For Original Fan Control Mode:

Bit	R/W	Description
7	R/W	**FAN Smoothing** This bit enables the FAN PWM smoothing change. 0: Disable 1: Enable
6-0	R/W	**Slope PWM Bit[6:0]** Slope = (Slope PWM bit[6:3] + Slope PWM bit[2:0] / 8) PWM value/℃

For Tachometer Closed-loop Mode:

Bit	R/W	Description
5-0	R/W	**Slope of Target RPM** Slope = 8 * Bit[5:0] (RPM/℃)

CONFIDENTIAL

9.5.2.2.45 FAN_CTL3-2 SmartGuardian Automatic Mode △-Temperature Registers (Index=75h, 6Dh, Default=00h)

Bit	R/W	Description
7	R/W	**Direct-Down Control** This bit is to determine the PWM linear changing decreasing mode. 0: Slow decreasing mode 1: Direct decreasing mode
6	-	**Reserved**
4-0	R/W	**△-Temperature Interval [4:0]**

9.5.2.2.46 FAN_CTL3-2 Target Zone Registers (Index=76h, 6Eh, Default=0Fh)

For Tachometer Closed-loop Mode:

Bit	R/W	Description
3-0	R/W	**Target Zone Boundary** Target Zone = Target RPM +/- (8 * bit[3:0]) (RPM/℃)

9.5.2.2.47 External Temperature Sensor Host Status Register (Index=88h, Default= -00h)

Bit	R/W	Description
7	R/W	**Data FIFO Pointer Clear** Writing 1 clears the Read/Write Data FIFO pointers. 0: No action It always reports 0 when reading it. 1: Both Read and Write Data FIFO pointers cleared Read Data register will point to Read Data 1, and Write Data register will point to Write Data 2.
6	R/WC	**SST Bus Abnormal/Contention Error** This bit reports the SST/PECI line status. 0: No error 1: Abnormal/Contention error
5	R/WC	**SST Slave Message Phase t-bit Extend over Error/SST or PECI Received Error Code** This bit reports the SST/PECI line status and received error code (8000h-81FFh). 0: No error 1: Error found
4	R/WC	**SST/PECI Line High-Z Status/Failed** This bit reports the SST/PECI line High-Z status. 0: SST/PECI line does not drive High-Z. 1: SST/PECI line drives High-Z.
3	R/WC	**Write_FCS_ERR** Writing 1 clears this bit. In the SST/PECI mode, it reports Write FCS error. 0: No Error 1: Write FCS error
2	R/WC	**NotValid/Read_FCS_ERR** Writing 1 clears this bit. In the SST/PECI mode, it reports Read FCS error. 0: No Error 1: Read FCS error

CONFIDENTIAL

Bit	R/W	Description
1	R/WC	**Finish (FNSH)** Writing 1 clears this bit. 0: None 1: This bit is set when the stop condition is detected.
0	R	**Host Busy (BUSY)** 0: The current transaction is completed. 1: This bit is set while the command is in operation.

9.5.2.2.48 External Temperature Sensor Host Target Address Register (Index=89h, Default=00h)

Bit	R/W	Description
7-0	R/W	**Host Target Address Register (HAddr [7:0])** This register is the Target Address field of the SST/PECI protocol.

9.5.2.2.49 External Temperature Sensor Host Write Length Register (Index=8Ah, Default=00h)

Bit	R/W	Description
7-0	R/W	**Host Write Length Register (HW_length [7:0])** This register is the Write Length field of the SST/PECI protocol.

9.5.2.2.50 External Temperature Sensor Host Read Length Register (Index=8Bh, Default=00h)

Bit	R/W	Description
7-0	R/W	**Host Read Length Register (HR_length [7:0])** This register is the Read Length field of the SST/PECI protocol.

9.5.2.2.51 External Temperature Sensor Host Command (Write Data 1) Register (Index=8Ch, Default=00h)

Bit	R/W	Description
7-0	R/W	**Host Command Register (HCMD [7:0])** This register is the command field of the protocol. In the PECI/SST mode, it is the command (Write Data 1) byte.

9.5.2.2.52 External Temperature Sensor Write Data (2-8) Register (Index=8Dh, Default=--h)

Bit	R/W	Description
7-0	R/W	**Write Data (2-8) [7:0] (in SST/PECI mode)** This is a 16-byte FIFO register, which is only valid in the PECI/SST mode.

9.5.2.2.53 External Temperature Sensor Host Control Register (Index=8Eh, Default=02h)

Bit	R/W	Description
7-6	R/W	**Auto-Start Control (Auto-START)** The host will start the transaction in a regular rate automatically. 00: 32 Hz 01: 16 Hz 10: 8 Hz

CONFIDENTIAL

Bit	R/W	Description
		11: 4 Hz
5	R/W	**Auto-Start (Auto-START)** 0: Disable 1: Enable The host will start the transaction in a regular rate, which is determined by bit [6:5] automatically.
4	R/W	**SST/PECI Host Auto-abort at FCS Error** This bit enables the SST/PECI host to abort the transaction when an error occurs to FCS. 0: Disable 1: Enable
3	R/W	**Auto-Start Two-Domain Enable** 0: One-Domain 1: Two-Domain
2	R/W	**SST/PECI Contention Control** This bit enables the SST/PECI bus contention control. 0: Disable 1: Enable When the SST/PECI bus is contentious, the host will abort the transaction.
1	R/W	**SST_idle_High** This bit sets the SST bus idle-high in the SST host mode. 0: SST idle low 1: SST idle high
0	R/W	**Start (START)** This bit is **write-only**. Writing 0 to it during transaction will issue a “kill process” and bit 4 of 88h register will be set. Writing 1 to it during the “NOT BUSY” state (bit 0 of 88h = 0) will start a transaction. Writing 1 to it during the “BUSY” state (bit 0 of 88h = 1) will not issue any transaction. So, the programmer should check the “BUSY” status before issuing a transaction. 0: This bit always returns 0 at read. 1: When this bit is set, the host controller will perform the transaction.

9.5.2.2.54 External Temperature Sensor Read Data (1-16) Register (Index=8Fh, Default=--h)

Bit	R/W	Description
7-0	R/W	**Read Data (1-16) [7:0]** This is a 32-byte FIFO register.

9.5.2.2.55 Special FAN Control Mode Extra Vector A, B Temperature Limit of Fan Start Registers (Index=90h, 94h, Default=FFh)

Bit	R/W	Description
7-0	R/W	**Temperature Limit Value of Fan Start**

9.5.2.2.56 Special FAN Control Mode Extra Vector A, B Slope Registers (Index=91h, 95h, Default=00h)

For Original Fan Control Mode:

Bit	R/W	Description
7	R/W	**Temperature Input Select 0**

CONFIDENTIAL

		Please refer to the description of Special FAN Control Mode Extra Vector A, B △-Temperature Registers for the detail.
6-0	R/W	**Slope PWM Bit[6:0]** Slope = (Slope PWM bit[6:3] + Slope PWM bit[2:0] / 8) PWM value/℃

CONFIDENTIAL

For Tachometer Closed-Loop Mode:

Bit	R/W	Description
7	R/W	**Reserved**
6-0	R/W	**Slope of Extra A and B RPM** Slope = 8 * Bit[6:0] (RPM/℃)

9.5.2.2.57 Special FAN Control Mode Extra Vector A, B △-Temperature Registers (Index=92h, 96h, Default=00h)

Bit	R/W	Description
7	R/W	**Temperature Input Select 1** For **Temperature Input Select 0**, please refer to bit 7 of Special FAN Control Mode Extra Vector A, B Slope Registers. 00: TMPIN1 01: TMPIN2 10: TMPIN3 11: Reserved
6-5	R/W	**Target FAN Select** These bits are to determine the target FAN to be added for extra vector. 10: FAN2 11: FAN3 Others: None
4-0	R/W	**△-Temperature Interval [4:0]**

9.5.2.2.58 Special FAN Control Mode Extra Vector A, B Range Registers (Index=93h, 97h, Default=00h)

For Original Fan Control Mode:

Bit	R/W	Description
7	R/W	**Positive/Negative Slope Selection** This bit determines whether the slope value in Special FAN Control Mode Extra Vector A, B is positive or negative. 0: Postive 1: Negive
6-0	R/W	**Range Selection [6:0]** These bits determine the extra vector range after the temperature limit (Index 90h, 94h). If the input temperature > (temperature limit + Range[6:0]), and the vector will equal the value of (temperature limit + Range[6:0]). If Range[6:0]=00h, it means no range limit.

9.5.2.2.59 PCH/AMDTSI Host Status Register (Index=98h, Default=40h)

Bit	R/W	Description
7	R/W	**Data FIFO Pointer Clear** Writing 1 clears Read/Write Data FIFO pointers. 0: No action It always reports 0 when reading it. 1: Both Read and Write Data FIFO pointers cleared Read Data register will point to Read Data 1, and Write Data register will point to Write Data 2.
6	R/W	**Bus Selection**

CONFIDENTIAL

Bit	R/W	Description
		This bit selects the SMB host protocol. 0: PCH 1: AMDTSI
5	R/WC	**Reserved**
4	R/WC	**Transmission Killed**
3	R/WC	**Bus Error** 0: No Error 1: Error
2	R/WC	**Data Valid** Writing 1 clears this bit. In the AMDTSI mode, it reports the valid bit of Data phase. If this bit is set to 0(valid data =0), the data is valid. 0: Data valid 1: Data invalid
1	R/WC	**Finish (FNSH)** Writing 1 clears this bit. 0: None 1: This bit is set when the stop condition is detected.
0	R	**HOST Busy (BUSY)** 0: The current transaction is completed. 1: This bit is set while the command is in operation.

CONFIDENTIAL

9.5.2.2.60 PCH/AMDTSI Host Target Address Register (Index=99h, Default=00h)

Bit	R/W	Description
7-0	R/W	**Host Target Address Register (HAddr [7:0])** This register is the Target Address field of the PCH/AMDTSI protocol.

9.5.2.2.61 PCH/AMDTSI Host Command Register (Index=9Ch, Default=00h)

Bit	R/W	Description
7-0	R/W	**Host Command Register (HCMD [7:0])** This register is the command field of the protocol. In the AMDTSI mode, it is the Command field. If the host controller is busy, the value of this register cannot be changed or the host will send the wrong command. If the value is out of definition (for example, 03h to FFh for AMDTSI protocol), the host will transfer it to the normal value and no error will be detected by the host controller.

9.5.2.2.62 PCH/AMDTSI Write Data Register (Index=9Dh, Default=--h)

Bit	R/W	Description
7-0	R/W	**Write Data** This is a 16-byte FIFO register.

9.5.2.2.63 PCH/AMDTSI Host Control Register (Index=9Eh, Default=02h)

Bit	R/W	Description
7-6	R/W	**Auto-Start Control (Auto-START)** The host will start the transaction in a regular rate automatically. 00: Disable auto-start 01: 16 Hz 10: 8 Hz 11: 4 Hz
5-4	R/W	**For AMDTSI Temperature Reading Report Register Selection** 00: None 01: Index 29h (TMPIN1) 10: Index 2Ah (TMPIN2) 11: Index 2Bh (TMPIN3) **For SM-Link Max. Temperature of CPU or MCH Reading Report Register Selection** 01: Index 29h 11: Index 2Bh **For SM-Link PCH Temperature Reading Report Register Selection** 00: Index 2Ah, if 9Eh<1>=1. **For MxM Temperature Reading Report Register Selection** 10: Index 2Ah, if 9Eh<1>=1.
3	R/W	**Reserved**
2	R/W	**AMDTSI Clock Selection**

CONFIDENTIAL

Bit	R/W	Description
		0: 100 kbits/s 1: 400 kbits/s
1	R/W	**PCH/MxM Temp Reported to 2Ah** 0: Disable 1: Enable Please refer to 9Eh<bit 5-4> for the detail. **AMDTSI_byte_sel** This bit selects 8/16 bit data in the AMDTSI mode. 0: AMDTSI 8-bit data 1: AMDTSI 16-bit data
0	R/W	**Start (START)** This bit is **write-only**. Writing 0 to it during transaction will issue a “kill process” and bit 4 of 98h register will be set. Writing 1 to it during the “NOT BUSY” state (bit 0 of 98h = 0) will start a transaction. Writing 1 to it during the “BUSY” state (bit 0 of 98h = 1) will not issue any transaction. So, the programmer should check whether the status is “BUSY” before issuing a transaction. 0: This bit always returns 0 at read. 1: When this bit is set, the host controller will perform the transaction.

9.5.2.2.64 PCH/AMDTSI Read Data (1-16) Register (Index=9Fh, Default=--h)

Bit	R/W	Description
7-0	R/W	**Read Data (1-16) [7:0]** This is a 21-byte FIFO register.

9.5.3 Operation

9.5.3.1 Power on Reset and Software Reset

When the system power is first applied, the Environment Controller performs “power on reset” on the registers, making them return to their individual default values during a system hardware reset, and the EC will acquire a monitored value before it goes inactive. The ADC is activated to monitor the VBAT pin and then goes inactive. A software reset through bit 7 of Configuration Register (Index=00h, Default=18h) (refer to page 73) performs the same functions as the hardware reset except the function of the Serial Bus Interface Address register.

CONFIDENTIAL

9.5.3.2 Starting Conversion

The monitoring function in the EC is activated when bit 3 of Configuration Register is cleared (low) and bit 0 of Configuration Register is set (high). Otherwise, this function will be enabled by setting several enabled bits, which are categorized into three groups, positive voltages, temperatures and FAN Tachometer inputs. Before the EC monitoring function is able to be executed then the monitoring process can then be started.

1. Set the limits.
2. Set the interrupt masks.
3. Set the enable bits.

Figure 9-4. Application Example

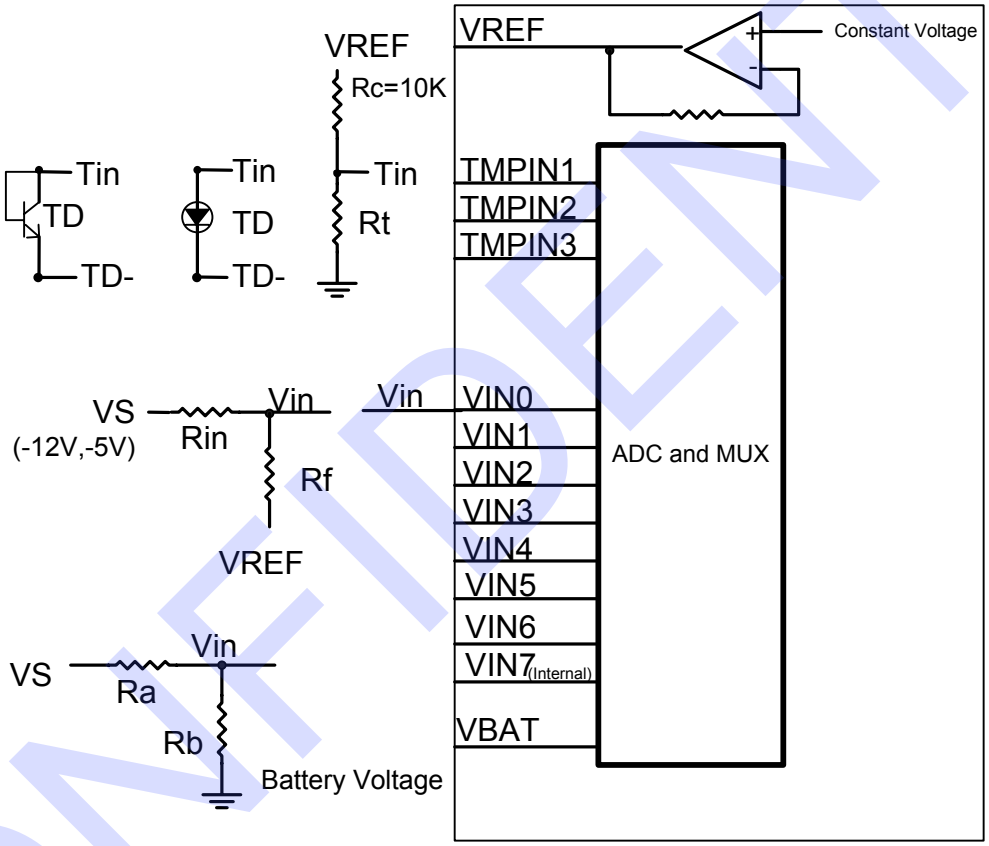

Note: The resistor should provide approximately 2V at the Analog Inputs.

CONFIDENTIAL

9.5.3.3 Voltage and Temperature Inputs

The 8-bit ADC has a 12mV LSB with an input range from 0V to 3.072V. The 2.5V supplies of PC applications can be directly connected to the inputs. When the input voltage is greated than 3.072V, it is necessary to divide the input voltage into an acceptable range. When the divided circuit is used to measure the positive voltage, the recommended range for Ra and Rb is from 10KΩ to 100KΩ. The negative voltage can be measured by the same divider, which is connected to VREF (constant voltage, 2.8V), and do not attempt to measure it with the divider connected to the ground. The EC temperature measurement system converts the voltage of the TMPINs to 8-bit two's-complement. The system also includes an OP amp providing a constant voltage, an external thermistor, a constant resistance, the ADC and a conversion table ROM.

Temperature	Digital Output Format	
	Binary	Hex
+ 125°C	01111101	7Dh
+ 25°C	00011001	19h
+ 1°C	00000001	01h
+ 0°C	00000000	00h
- 1°C	11111111	FFh
- 25°C	11100111	E7h
- 55°C	11001001	C9h

With the addition of the external application circuit, the actual voltages are calculated below:

Positive Voltage: Vs = Vin X (Ra+Rb) / Rb
Negative Voltage: Vs = (1+Rin/Rf) X Vin – (Rin/Rf) X VREF

All the analog inputs are equipped with the internal diodes that clamp the input voltage exceeding the power supply and ground; nevertheless, the current limiting input resistor is recommended since no dividing circuit is available.

9.5.3.4 Layout and Grounding

A separate and low-impedance ground plane for analog ground is essential to achieve accurate measurement. The analog ground also provides a ground point for the voltage dividers including the temperature loops and analog components. Analog components such as voltage dividers, feedback resistors and the constant resistors of the temperature loops should be located as closely as possible to the IT8772E. However, the thermistors of the temperature loops should be positioned within the measuring area. In addition, the power supply bypass and the parallel combination of 10μF and 0.1μF bypass capacitors connected between AVCC3 and analog ground also needs to be located as closely as possible to the IT8772E.
Due to the small differential voltage of thermal diode (diode-connected transistor), it is necessary to adhere to the steps below for PCB layout.

- Position the sensor as closely as possible to the EC.
- The sensor ground should be directly shorted to GNDA with excellent noise immunity.
- Keep traces away from any noise sources. (High voltage, fast data bus, fast clock , CRTs …)
- Use trace width of10 mil minimum and provide guard ground (flanking and under).
- Position 0.1μF bypass capacitors as closely as possible to IT8772E.

CONFIDENTIAL

9.5.3.5 Fan Tachometer

The Fan Tachometer inputs gate a 22.5 kHz clock into an 8-bit or 16-bit counter (maximum count=255 or 65535) for one period of the input signals. Counts are based on two pulses per revolution for tachometer output.

RPM = 1.35 X 10^6 / (Count X Divisor) ; (Default Divisor = 2)

The maximum input signal range is from 0 to VCC. An additional external circuit is needed to clamp the input voltage and current.

9.5.3.6 Interrupt of the EC

The EC generates interrupts as a result of each of its Limit registers on the analog voltage, temperature, and FAN monitor. All the interrupts are indicated in two Interrupt Status Registers. The IRQ and SMI# outputs have individual mask registers. These two Interrupts can also be enabled/disabled by Configuration Register (Index=00h, Default=18h) (refer to page 73). The Interrupt Status Registers will be reset after a read operation. When the Interrupt Status Registers are cleared, the Interrupt lines will also be cleared. When a read operation is completed before the completion of the monitoring loop sequence, it indicates an Interrupt Status Register has been cleared. It takes EC 1.5 seconds to allow all the EC Registers to be safely updated between completed read operations. When bit 3 of the Configuration Register is set to high, the Interrupt lines are cleared and the monitoring loop will be stopped. The loop will resume after this bit is cleared.

All analog voltage inputs have both high and low Limit Registers to generate interrupts whereas FAN monitoring inputs only have low Limit Register to warn the host. The IT8772E provides three modes dedicated to temperature interrupts in the EC: “Interrupt” mode, “Enhanced Interrupt” mode and “Comparator” mode.

Interrupt Mode

An interrupt will be generated whenever the temperature exceeds Th limit, and the corresponding interrupt status bits will be set to high until being reset by reading Interrupt Status Register 3 (Index=03h, Default=00h) (refer to page 74). Once an interrupt event occurs by exceeding Th limit, an interrupt will only occur again when the temperature goes below TL limit after being reset. Again, it will set the corresponding status bit to high until being reset by reading Interrupt Status Register 3 (Index=03h, Default=00h) (refer to page 74).

Enhanced Interrupt Mode

When the enhanced interrupt mode is enabled (bit 3, 6 and 7 of Fan Tachometer Control Register (Index=0Ch, Default=00h) for TMPIN1, 2, and 3 respectively) (refer to page 75), an interrupt will be generated when the temperature is higher than the high limit or lower than the low limit.

Comparator Mode

This mode is entered when the TL limit register is set to 127°C. In this mode, an interrupt will be generated whenever the temperature exceeds the Th limit. The interrupt will also be cleared by reading Interrupt Status Register 3 (Index=03h, Default=00h) (refer to page 74), but the interrupt will be set again following the completion of another measurement cycle. It will remain set until the temperature goes below the Th limit.

CONFIDENTIAL

Figure 9-5. Temperature Interrupt Response Diagram

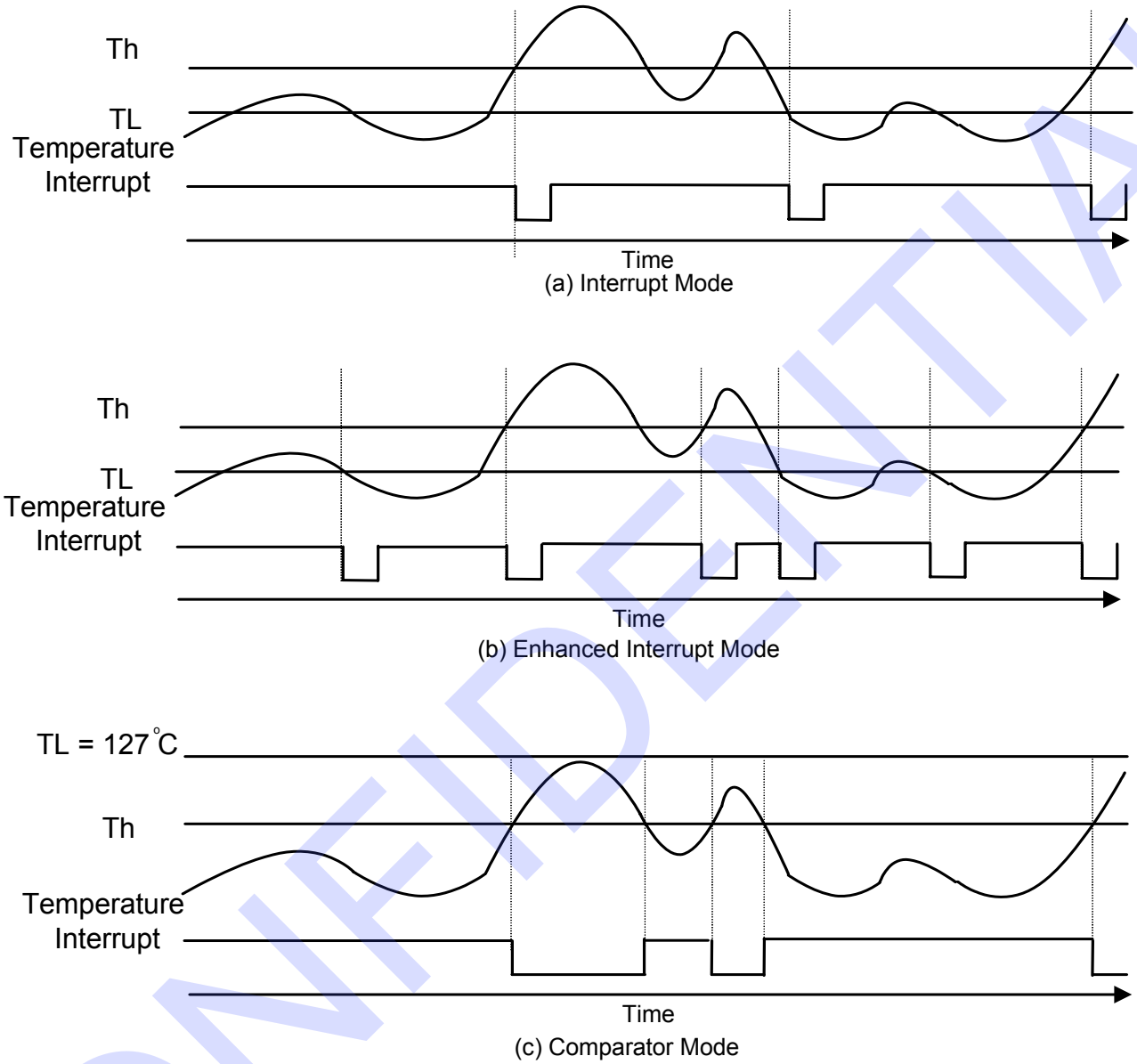

CONFIDENTIAL

9.5.3.7 FAN Controller FAN_CTL's ON-OFF and SmartGuardian Modes

The IT8772E provides an advanced FAN Controller. Two modes, ON_OFF and SmartGuardian, are provided for each controller. The former is a logical ON or OFF, and the latter is a PWM output. With the addition of external application circuits, the FAN's voltage values can be varied easily.

In the SmartGuardian Mode, there are two operational choices, software control or automatic control.

While under software control, the PWM value is subject to the changes in the values of bit 6-0 of FAN_CTL 2-3 PWM Control Registers (Index=16h, 17h). With the application circuits, FAN_CTL can generate 256 steps of voltage. So, the FAN_CTL 2-3 PWM Control Registers can vary the voltage by changing the PWM value. Fan speeds or other voltage control cooling device can be varied in 256 steps.
While under automatic mode, the PWM value is subject to the temperature inputs by linear changes. When the temperature exceeds a start limit, FAN_CTL spins in a start PWM value (Index 73h, 6Bh). When the temperature reading is between the Start limit and the full limit (=Ts+(256- Start PWM)/Slope), the PWM value changes depending on the temperature reading if the reading exceeds the right boundary. If the temperature increases X ℃, the PWM value will increase X * K. K (Slope) is a constant value with 4 bits for the integer and 3 bits for the decimal, and is determined by bit 7 of FAN_CTL 3-2 SmartGuardian Automatic mode Start PWM register and bit 5-0 of FAN_CTL 3-2 SmartGuardian Automatic mode control registers. However, if the reading doesn't exceed the right boundary, the PWM value will keep the original value. For example, if PWM is currently at a value of Pa, it will not change if Tb < the temperature reading < Ta. If the new reading (Tnew) > Ta, the new PWM value will be Start PWM + K * (Tnew – Ts). If the new reading < Tb, there are two decreasing modes. If bit 7 of FAN_CTL 3-2 SmartGuardian Automatic mode △-Temperature is 0, the new PWM value will be Start PWM + K * ((Tnew+Ta)/2 – Ts). If the bit is 1, the new PWM value will be Start PWM + K * (Tnew – Ts). When the temperature is lower than the start limit but larger than the OFF limit (Index 70h, 68h, 60h), FAN_CTL will not stop, but keep in the start PWM value until the temperature is lower than the OFF limit.

Figure 9-6. SmartGuardian Automatic Mode

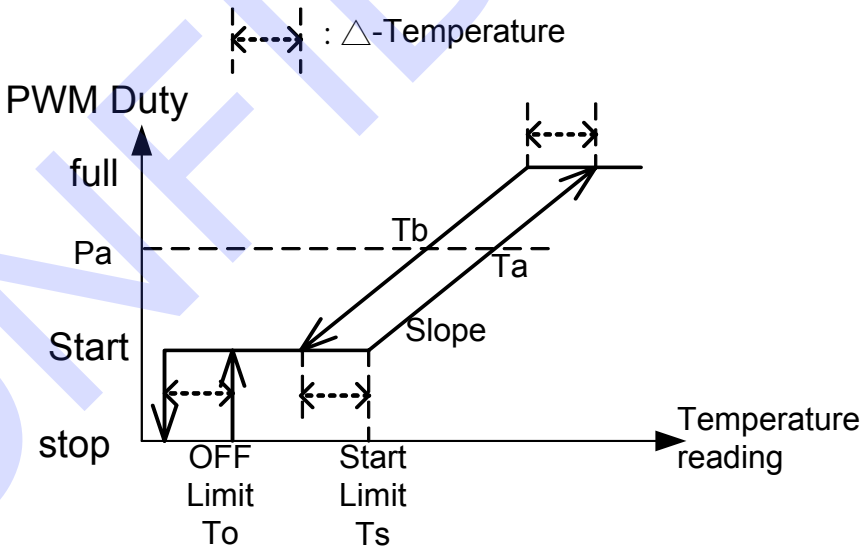

CONFIDENTIAL

9.5.3.8 External Thermal Sensor Programming Procedure

Figure 9-7. PECI Programming Procedure

CONFIDENTIAL

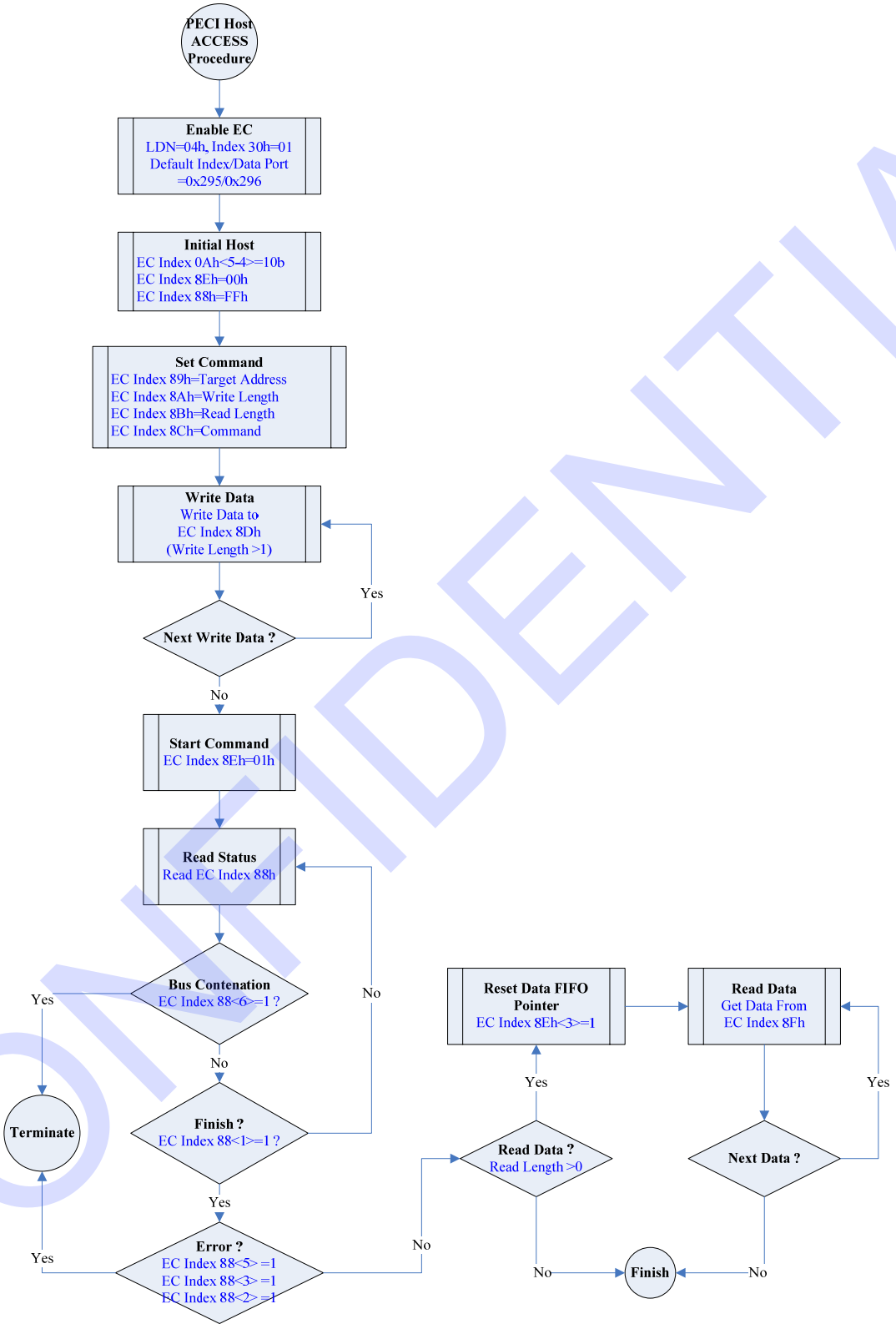

CONFIDENTIAL

Figure 9-8. SST Host Programming Procedure

CONFIDENTIAL

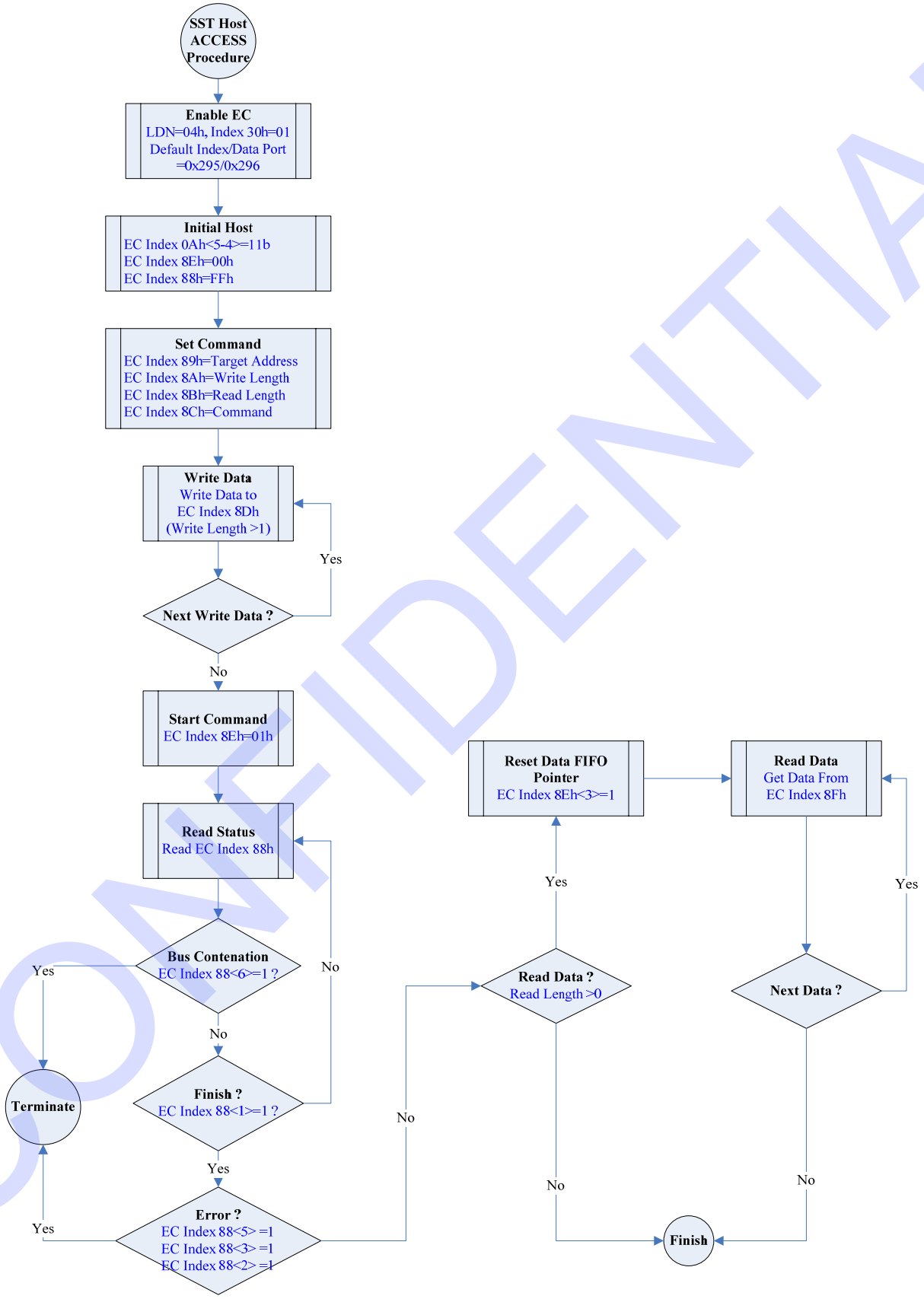

CONFIDENTIAL

Figure 9-9. SST Slave Programming Procedure

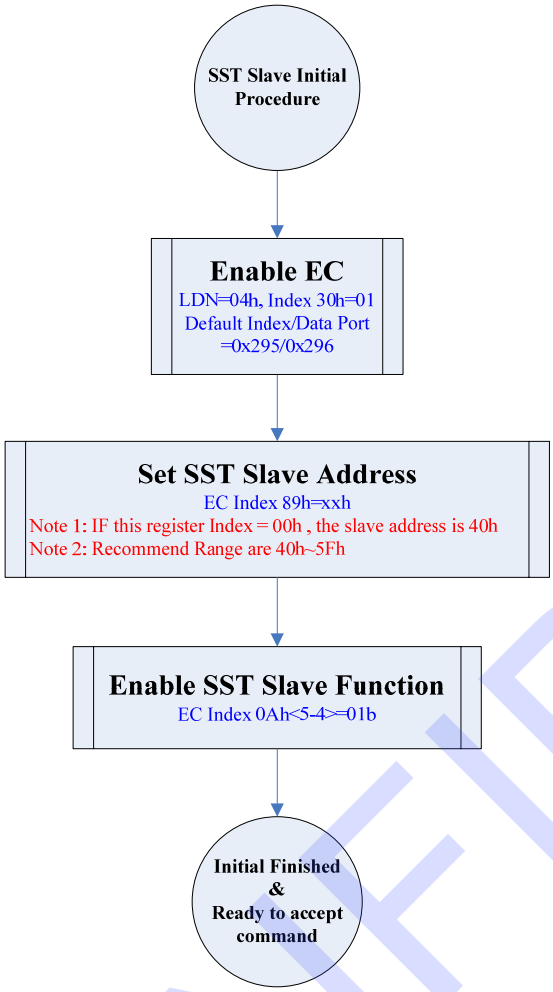

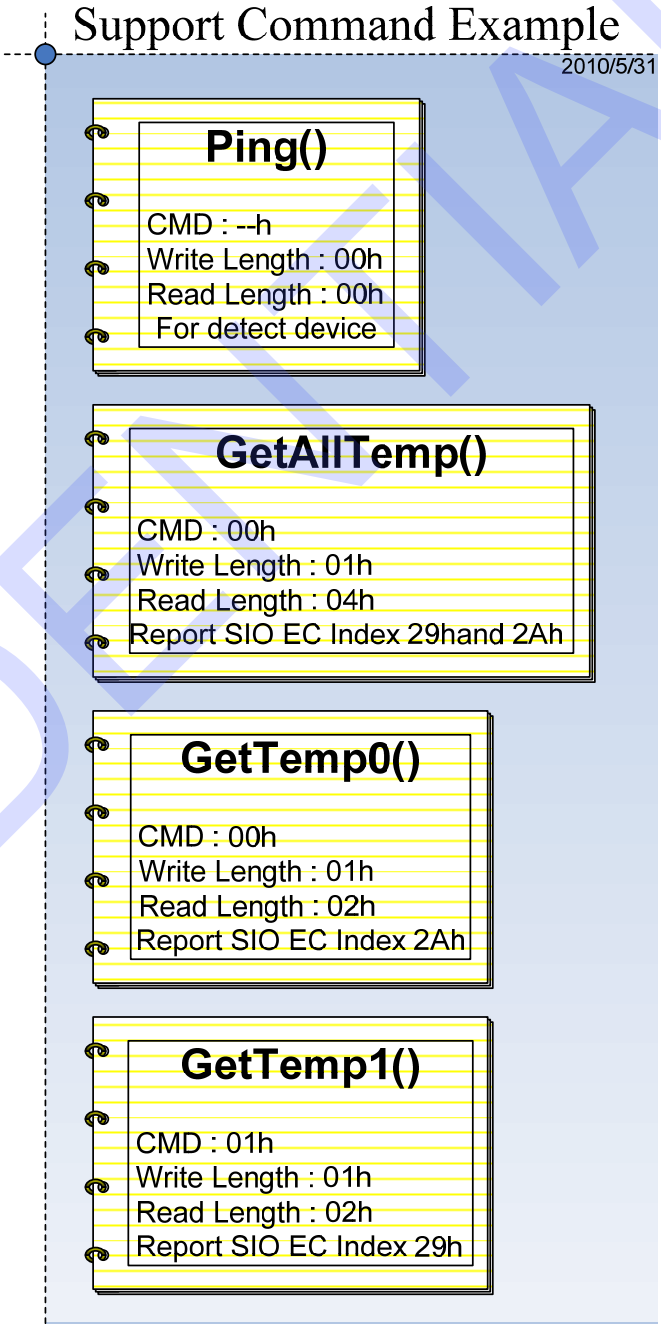

CONFIDENTIAL

Figure 9-10. SMBus Host Programming Procedure

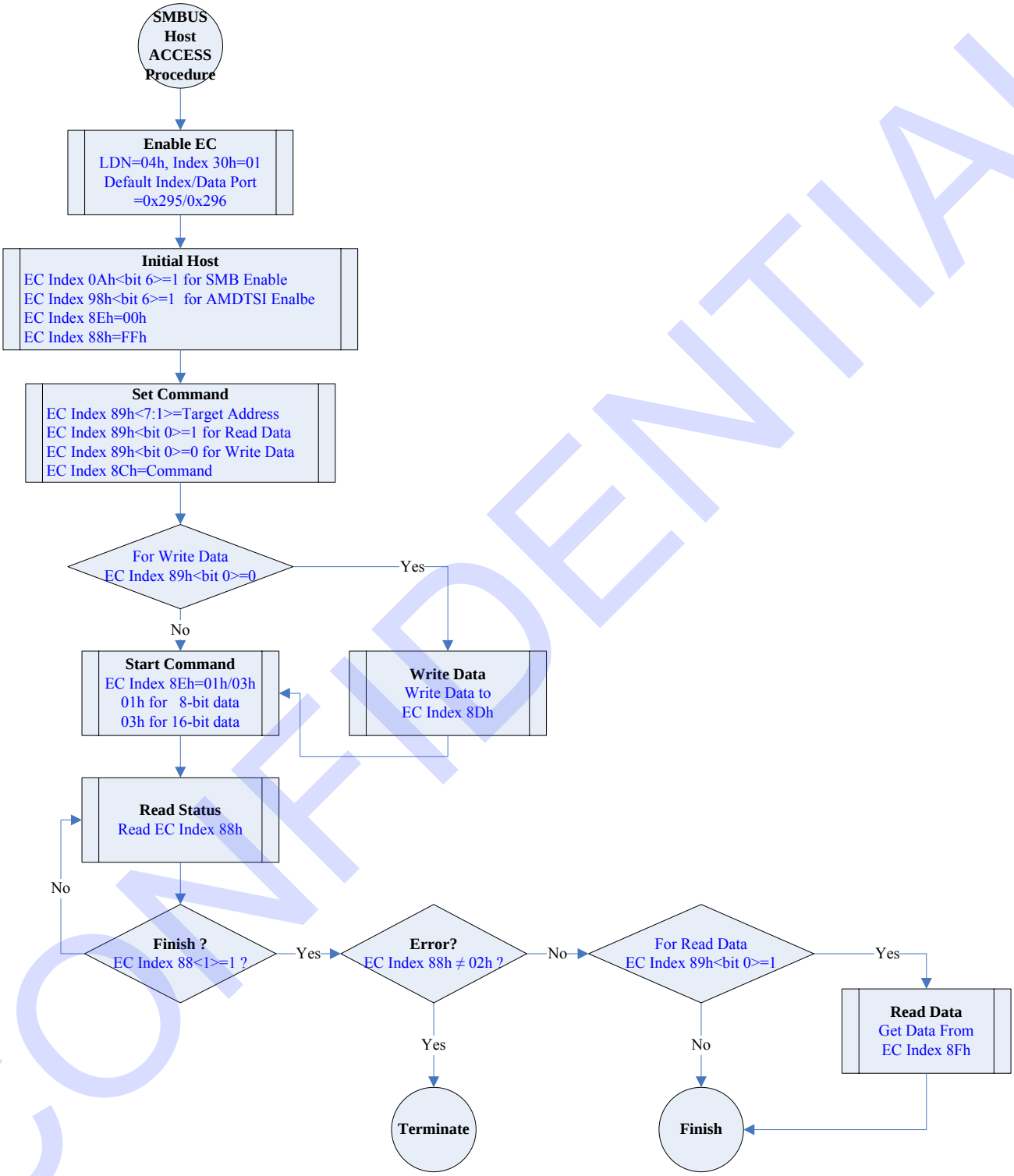

CONFIDENTIAL

Figure 9-11. AMDTSI Host Programming Procedure

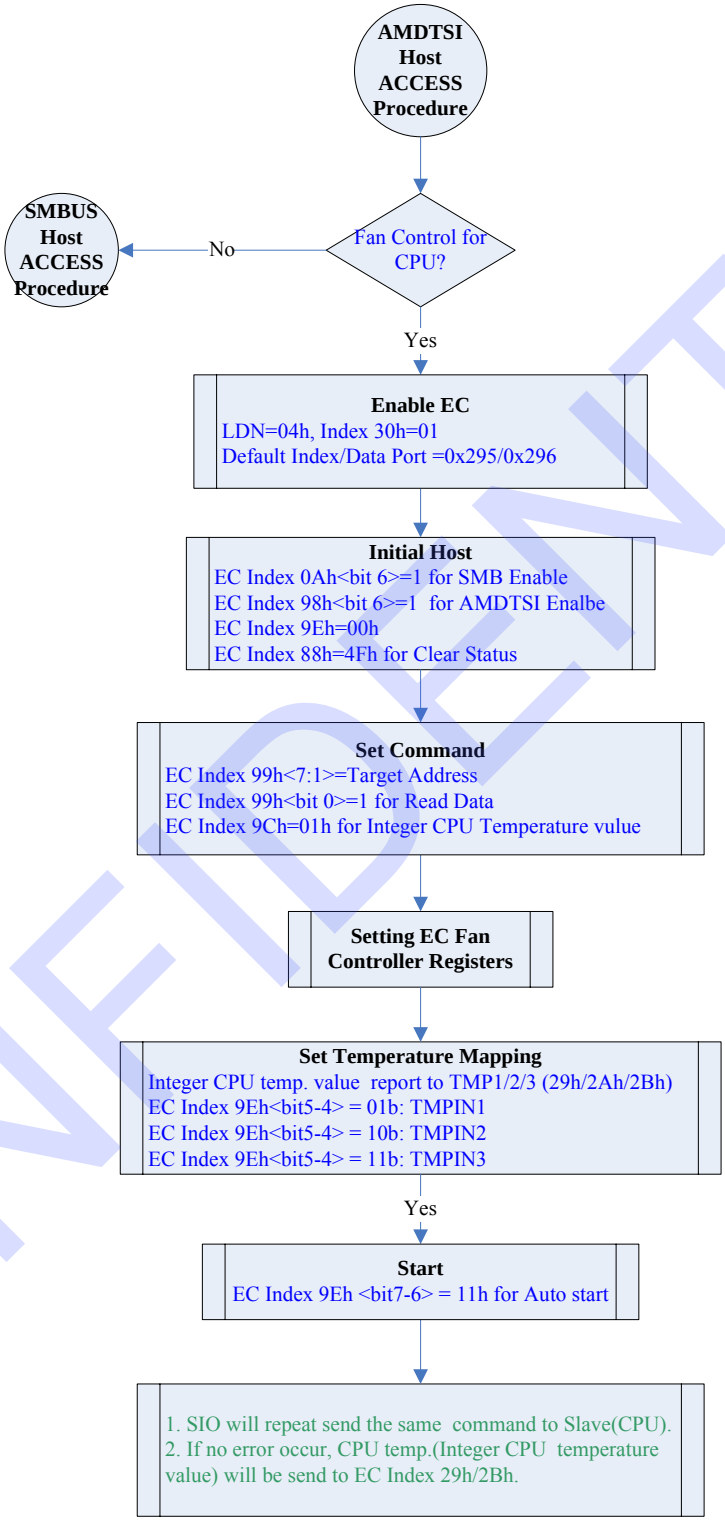

CONFIDENTIAL

Figure 9-12. PCH SM-Link Programming Procedure

CONFIDENTIAL

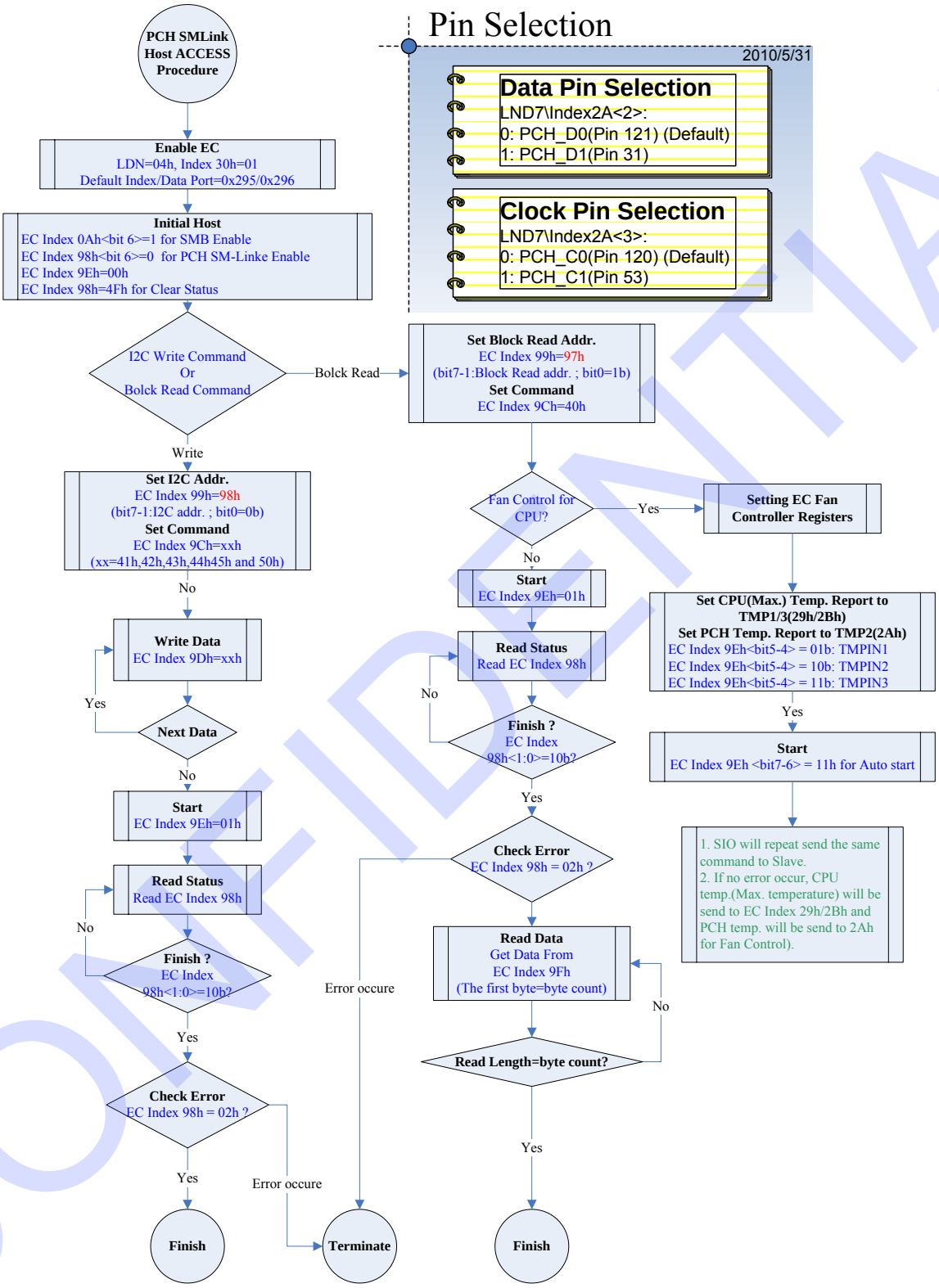

CONFIDENTIAL

9.6 Serial Port (UART)

The IT8772E incorporates two enhanced serial ports that perform serial to parallel conversion on received data, and parallel to serial conversion on transmitted data. Each of the serial channels individually contains a programmable baud rate generator which is capable of dividing the input clock by a number ranging from 1 to 65535. The data rate of each serial port can be programmed from 115.2K baud down to 50 baud as well. The character options are programmable for 1 start bit; 1, 1.5 or 2 stop bits; even, odd, stick or no parity; and privileged interrupts.

Table 9-3. Serial Channel Registers

Register	DLAB*	Address	READ	WRITE
Data	0	Base + 0h	RBR (Receiver Buffer Register)	TBR (Transmitter Buffer Register)
Control	0	Base + 1h	IER (Interrupt Enable Register)	IER
	x	Base + 2h	IIR (Interrupt Identification Register)	FCR (FIFO Control Register)
	x	Base + 3h	LCR (Line Control Register)	LCR
	x	Base + 4h	MCR (Modem Control Register)	MCR
	1	Base + 0h	DLL (Divisor Latch LSB)	DLL
	1	Base + 1h	DLM (Divisor Latch MSB)	DLM
Status	x	Base + 5h	LSR (Line Status Register)	LSR
	x	Base + 6h	MSR (Modem Status Register)	MSR
	x	Base + 7h	SCR (Scratch Pad Register)	SCR

* DLAB is bit 7 of the Line Control Register.

9.6.1 Data Register

The TBR and RBR individually hold five to eight data bits. If the transmitted data are less than eight bits, it aligns to the LSB. Either received or transmitted data are buffered by a shift register, and are latched first by a holding register. Bit 0 of any word is first received and transmitted.

9.6.1.1 Receiver Buffer Register (RBR) (Read only, Address offset=0, DLAB=0)

This register receives and holds the incoming data. It contains a non-accessible shift register which converts the incoming serial data stream into a parallel 8-bit word.

9.6.1.2 Transmitter Buffer Register (TBR) (Write only, Address offset=0, DLAB=0)

This register holds and transmits the data via a non-accessible shift register, and converts the outgoing parallel data into a serial stream before data transmission.

CONFIDENTIAL

9.6.2 Control Register

9.6.2.1 Interrupt Enable Register (IER) (Read/Write, Address offset=1, DLAB=0)

The IER is to enable or disable four active high interrupts which activate the interrupt outputs with its lower four bits: IER(0), IER(1), IER(2), and IER(3).

Bit	Default	Description
7-4	-	**Reserved**
3	0	**Enable Modem Status Interrupt** Set this bit high to enable the modem status interrupt when one of the modem status registers changes its bit status.
2	0	**Enable Receiver Line Status Interrupt** Set this bit high to enable the receiver line status interrupt, which happens when overrun, parity, framing or break occurs.
1	0	**Enable Transmitter Holding Register Empty Interrupt** Set this bit high to enable the transmitter holding register empty interrupt.
0	0	**Enable Received Data Available Interrupt** Set this bit high to enable the received data available interrupt and time-out interrupt in the FIFO mode.

9.6.2.2 Interrupt Identification Register (IIR) (Read only, Address offset=2)

This register facilitates the host CPU to determine the interrupt priority and its source. The four existing interrupts are listed below in priority order.

1. Receiver Line Status (highest priority)
2. Received Data Ready
3. Transmitter Holding Register Empty
4. Modem Status (lowest priority)

When a privileged interrupt is pending and the interrupt type is stored in the IIR which is accessed by the host, the serial channel holds back all interrupts and indicates the pending interrupts with the highest priority to the host. Any new interrupts will not be acknowledged until the host access is completed. Please refer to the following table for the detail.

CONFIDENTIAL

Table 9-4. Interrupt Identification Register

FIFO Mode	Interrupt Identification Register			Interrupt Set and Reset Function			
Bit 3	**Bit 2**	**Bit 1**	**Bit 0**	**Priority**	**Interrupt Type**	**Interrupt Source**	**Interrupt Reset Control**
0	X	X	1	-	None	None	-
0	1	1	0	First	Receiver Line Status	OE, PE, FE, or BI	Read LSR
0	1	0	0	Second	Received Data Available	Received Data Available	Read RBR or FIFO drops below the trigger level
1	1	0	0	Second	Character Time-out Indication	No characters have been removed from or input to the RCVR FIFO during the last four character times and there is at least one character in it during this period.	Read RBR
0	0	1	0	Third	Transmitter Holding Register Empty	Transmitter Holding Register Empty	Read IIR if THRE is the Interrupt Source Write THR
0	0	0	0	Fourth	Modem Status	CTS#, DSR#, RI#, DCD#	Read MSR

Note: X = Not Defined

IIR(7), IIR(6): Set when FCR(0) = 1.
IIR(5), IIR(4): Always logic 0.
IIR(3): In the non-FIFO mode, this bit is a logic 0. In the FIFO mode, this bit is set along with bit 2 when a time-out Interrupt is pending.
IIR(2), IIR(1): Used to identify the highest priority interrupt pending.
IR(0): Used to indicate a pending interrupt in either a hard-wired prioritized or polled environment with a logic 0 state. In such a case, IIR contents may be used as a pointer that points to the appropriate interrupt service routine.

CONFIDENTIAL

9.6.2.3 FIFO Control Register (FCR) (Write Only, Address offset=2)

This register is used to not only enable and clear the FIFO but also set the RCVR FIFO trigger level.

Bit	Default	Description
7-6	-	**Receiver Trigger Level Selection** These bits are to set the trigger level for the RCVR FIFO interrupt.
5-4	0	**Reserved**
3	0	This bit does not affect Serial Channel operation. RXRDY and TXRDY functions are not available on this chip.
2	0	**Transmitter FIFO Reset** This self-cleared bit clears all contents of the XMIT FIFO and resets its related counter to 0 via a logic "1".
1	0	**Receiver FIFO Reset** Setting this self-cleared bit to a logic "1" will clear all contents of the RCVR FIFO and resets its related counter to "0" (except the shift register).
0	0	**FIFO Enable** XMIT and RCVR FIFOs are enabled when this bit is set high. XMIT whereas disabled and cleared respectively when this bit is cleared to low. This bit must be a logic "1" if data are written to the other bits of the FCR, or they will not be properly programmed. When this register is switched to the non-FIFO mode, all of its contents will be cleared.

Table 9-5. Receiver FIFO Trigger Level Encoding

FCR (7)	FCR (6)	RCVR FIFO Trigger Level
0	0	1 byte
0	1	4 bytes
1	0	8 bytes
1	1	14 bytes

9.6.2.4 Divisor Latches (DLL, DLM) (Read/Write, Address offset=0,1 DLAB=0)

Two 8-bit Divisor Latches (DLL and DLM) store the divisor values in a 16-bit binary format. They are loaded during initialization to generate a desired baud rate.

9.6.2.5 Baud Rate Generator (BRG)

Each serial channel contains a programmable BRG, which can take any clock input (from DC to 8 MHz) to generate standard ANSI/CCITT bit rates for the channel clocking with an external clock oscillator. The number of DLL or DLM is in 16-bit format, providing the divisor ranging from 1 to 2^{16} to obtain the desired baud rate. The output frequency is 16X data rate.

CONFIDENTIAL

Table 9-6. Baud Rate Using (24 MHz ÷ 13) Clock

Desired Baud Rate	Divisor Used
50	2304
75	1536
110	1047
134.5	857
150	768
300	384
600	192
1200	96
1800	64
2000	58
2400	48
3600	32
4800	24
7200	16
9600	12
19200	6
38400	3
57600	2
115200	1

9.6.2.6 Scratch Pad Register (Read/Write, Address offset=7)

This 8-bit register does not control the UART operation in any way. It is intended as a scratch pad register to be used by programmers to temporarily hold general purpose data.

CONFIDENTIAL

9.6.2.7 Line Control Register (LCR) (Read/Write, Address offset=3)

LCR controls the format of the data character and supplies the information of the serial line.

Bit	Default	Description
7	0	**Divisor Latch Access Bit (DLAB)** This bit must be set high to access the Divisor Latches of the baud rate generator during READ or WRITE operation whereas set low to access Data Register (refer to page 107) or Interrupt Identification **Register (IIR) (Read only, Address offset=2)** (refer to page 108).
6	0	**Set Break** This bit forces the Serial Output (SOUT) to the spacing state (logic 0) by a logic 1, which will be preserved until a low level resetting LCR(6), enabling the serial port to alert the terminal in a communication system.
5	0	**Stick Parity** When this bit and LCR(3) are high at the same time, the parity bit is transmitted and then detected by a receiver in an opposite state by LCR(4) to force the parity bit into a known state and to check the parity bit in a known state.
4	0	**Even Parity Selection** When the parity is enabled (LCR(3) = 1), 0: Odd parity 1: Even parity
3	0	**Parity Enable** A parity bit, located between the last data word bit and stop bit, will be generated or checked (transmit or receive data) when LCR(3) is high.
2	0	**Number of Stop Bit** This bit specifies the number of stop bits in each serial character, as summarized in Table 9-7. Stop Bit Number Encoding.
1-0	00	**Word Length Select [1:0]** 11: 8 bits 10: 7 bits 01: 6 bits 00: 5 bits

Table 9-7. Stop Bit Number Encoding

LCR (2)	Word Length	No. of Stop Bit
0	-	1
1	5 bits	1.5
1	6 bits	2
1	7 bits	2
1	8 bits	2

Note: The receiver will ignore all stop bits beyond the first, regardless of the number used in transmission.

CONFIDENTIAL

9.6.2.8 Modem Control Register (MCR) (Read/Write, Address offset=4)

This register controls the interface by the modem or data set (or device emulating a modem).

Bit	Default	Description
7-5	-	**Reserved**
4	0	**Internal Loopback** This bit provides a loopback feature for diagnostic test of the serial channel when set high. Serial Output (SOUT) is set to the Marking State Shift Register output loops back into the Receiver Shift Register. All Modem Control inputs (CTS#, DSR#, RI# and DCD#) are disconnected. The four Modem Control outputs (DTR#, RTS#, OUT1 and OUT2) are internally connected to the four Modem Control inputs and forced to inactive high then the transmitted data are immediately received, allowing the processor to verify the transmitted and received data path of the serial channel.
3	0	**OUT2** The Output 2 bit enables the serial port interrupt output by a logic 1.
2	0	**OUT1** This bit does not have an output pin and can only be read or written by CPU.
1	0	**Request to Send (RTS)** This bit controls the Request to Send (RTS#), which is in an inverse logic state with that of MCR(1).
0	0	**Data Terminal Ready (DTR)** This bit controls the Data Terminal Ready (DTR#), which is in an inverse logic state with that of the MCR(0).

9.6.3 Status Registers

9.6.3.1 Line Status Register (LSR) (Read/Write, Address offset=5)

This register provides the status indication and is usually the first register read by the CPU to determine the cause of an interrupt or to poll the status of each serial channel. The contents of the LSR are described below:

Bit	Default	Description
7	0	**Error in Receiver FIFO** In the 16450 mode, this bit is always 0. In the FIFO mode, it is set high when there is at least one parity error, framing or break interrupt in the FIFO. This bit is cleared when the CPU reads the LSR if there are no subsequent errors in the FIFO.
6	1	**Transmitter Empty** This **read only** bit indicates that the Transmitter Holding Register and Transmitter Shift Register are both empty. Otherwise, this bit is "0" and has the same function as that in the FIFO mode.
5	1	**Transmitter Holding Register Empty (THRE)** This **read only** bit indicates that the TBR is empty and is ready to accept a new character for transmission. It is set high when a character is transferred from the THR into the Transmitter Shift Register, causing a priority 3 IIR interrupt which is cleared by a read of IIR. In the FIFO mode, it is set when the XMIT FIFO is empty, and is cleared when at least one byte is written to the XMIT FIFO.

CONFIDENTIAL

Bit	Default	Description
4	0	**Line Break** The Line Break (LB) Interrupt status bit indicates that the last character received is a break character, which is invalid but complete. It includes parity and stop bits. This situation occurs when the received data input is held in the spacing (logic 0) for longer than a full word transmission time (start bit + data bits + parity + stop bit). When any of these error conditions is detected (LSR(1) to LSR(4)), a Receiver Line Status interrupt (priority 1) will be generated in IIR, with bit 2 of Interrupt Enable Register (IER) (Read/Write, Address offset=1, DLAB=0) previously enabled(refer to page 108).
3	0	**Framing Error (FE)** A logic 1 indicates that the stop bit in the received character is not valid. It will be reset low when CPU reads the contents of the LSR.
2	0	**Parity Error (PE)** A logic 1 indicates that the received data character does not have the correct even or odd parity, as selected by LCR(4). It will be reset to "0" whenever LSR is read by CPU.
1	0	**Overrun Error (OE)** A logic 1 indicates that the RBR has been overwritten by the next character before it had been read by the CPU. In the FIFO mode, OE occurs when FIFO is full and the next character has been completely received by the Shift Register. It will be reset when LSR is read by the CPU.
0	0	**Data Ready** A logic 1 indicates a character has been received by RBR. A logic 0 indicates all the data in RBR or RCVR FIFO have been read.

9.6.3.2 Modem Status Register (MSR) (Read/Write, Address offset=6)

This 8-bit register indicates the current state of the control lines with modems or the peripheral devices in addition to this current state information. Four of these eight bits, MSR(4) - MSR(7), can provide the state change information when the modem control input changes the state. It is reset low when the host reads the MSR.

Bit	Default	Description
7	0	**Data Carrier Detect(DCD)** This bit indicates the complement status of Data Carrier Detect (DCD#) input. If MCR(4) = 1, MSR(7) is equivalent to OUT2 of the MCR.
6	0	**Ring Indicator(RI)** This bit indicates the complement status to the RI# input. If MCR(4)=1, MSR(6) is equivalent to OUT1 in the MCR.
5	0	**Data Set Ready(DSR)** This bit indicates that the modem is ready to provide received data to the serial channel receiver circuitry. If the serial channel is in the loop mode (MCR(4) = 1), MSR(5) is equivalent to DTR# of MCR.
4	0	**Clear to Send(CTS)** This bit indicates the complement of CTS# input. When the serial channel is in the Loop mode (MCR(4)=1), MSR(5) is equivalent to RTS# of MCR.
3	0	**Delta Data Carrier Detect(DDCD)** This bit indicates that the DCD# input state has been changed since being read by the host last time.
2	0	**Trailing Edge Ring Indicator(TERI)** This bit indicates that the RI input state to the serial channel has been changed from low to high since being read by the host last time. The change in a logic “1” does not activate the TERI.
1	0	**Delta Data Set Ready(DDSR)**

CONFIDENTIAL

Bit	Default	Description
		A logic "1" indicates that the DSR# input state to the serial channel has been changed since being read by the host last time.
0	0	**Delta Clear to Send(DCTS)** This bit indicates the CTS# input to the chip has changed the state since MSR was read last time.

CONFIDENTIAL

9.6.4 Reset

The reset of the IT8772E should be held to an idle mode reset high for 500 ns until initialization, which causes the initialization of the internal clock counters of transmitter and receiver.

Table 9-8. Reset Control of Register and Pinout Signal

Register/Signal	Reset Control	Reset Status
Interrupt Enable Register	Reset	All bits Low
Interrupt Identification Register	Reset	Bit 0 is high and bits 1-7 are low
FIFO Control Register	Reset	All bits Low
Line Control Register	Reset	All bits Low
Modem Control Register	Reset	All bits Low
Line Status Register	Reset	Bits 5 and 6 are high, others are low
Modem Status Register	Reset	
SOUT1, SOUT2	Reset	Bits 0-3 low, bits 4-7 input signals
RTS1#, RTS2#, DTR1#, DTR2#	Reset	High
IRQ of Serial Port	Reset	High
		High Impedance

9.6.5 Programming

Each serial channel of the IT8772E is programmed by control registers, whose contents define the character length, number of stop bits, parity, baud rate and modem interface. Even though these control registers can be written in any given order, IER should be the last register written because it controls whether the interrupt is enabled or not. After the port is programmed, these registers still can be updated whenever the port does not transfer data.

9.6.6 Software Reset

This approach allows the serial port to return to a completely known state without a system reset. It is achieved by writing the required data to LCR, DLL, DLM and MCR. LSR and RBR must be read before interrupts are enabled to clear out any residual data or status bits that may be invalid for subsequent operations.

9.6.7 Clock Input Operation

The input frequency of the Serial Channel is 24 MHz ÷ 13, not exactly 1.8432 MHz.

9.6.8 FIFO Interrupt Mode Operation

(1) RCVR Interrupt

By setting bit 0 of FIFO Control Register (FCR) (Write Only, Address offset=2) (refer to page 110) and bit 0 of Interrupt Enable Register (IER) (Read/Write, Address offset=1, DLAB=0) (refer to page 108) high, the RCVR FIFO and receiver interrupts are enabled. The RCVR interrupt occurs under the following conditions:

The receive data available interrupt will be issued only when the FIFO has reached its programmed trigger level and cleared as soon as the FIFO drops below its trigger level.

The receiver line status interrupt has higher priority over the received data available interrupt.

CONFIDENTIAL

The time-out timer will be reset after receiving a new character or after the host reads RCVR FIFO whenever a time-out interrupt occurs. The timer will be reset when the host reads one character from RCVR FIFO.

CONFIDENTIAL

For the RCVR FIFO time-out interrupt, it will occur under the following conditions by enabling the RCVR FIFO and receiver interrupts:

The RCVR FIFO time-out interrupt will occur only if there is at least one character in FIFO whenever the interval between the most recently received serial character and the most recent Host READ from the FIFO is longer than four consecutive character times.

The time-out timer will be reset after receiving a new character or after the host reads RCVR FIFO whenever a time-out interrupt occurs. The timer will be reset when the host reads one character from RCVR FIFO.

(2) XMIT Interrupt

By setting bit 0 of FIFO Control Register (FCR) (Write Only, Address offset=2) (refer to page 110) and bit 1 of Interrupt Enable Register (IER) (Read/Write, Address offset=1, DLAB=0) (refer to page 108) high, the XMIT FIFO and transmitter interrupts are enabled. The XMIT interrupt occurs under the following conditions:

a. The transmitter interrupt occurs when the XMIT FIFO is empty, and it will be reset if the THR is written or the IIR is read.

b. The transmitter FIFO empty indications will be delayed for one character time minus the last stop bit time whenever the following condition occurs:

   THRE = 1 and there have not been at least two bytes in the transmitter FIFO at the same time since the last THRE = 1. The transmitter interrupt after changing FCR(0) will be immediate if it is enabled. Once the first transmitter interrupt is enabled, the THRE indication will be delayed for one character time minus the last stop bit time.

The character time-out and RCVR FIFO trigger level interrupts have the same priority as the received data available interrupt. The XMIT FIFO empty has the same priority as the transmitter holding register empty interrupt.

FIFO Polled Mode Operation [FCR(0)=1, and IER(0), IER(1), IER(2), IER(3) or all are 0].

Either or both XMIT and RCVR can be in this operation mode. The operation mode can be programmed by users and is responsible for checking the RCVR and XMIT status via LSR described below:

LSR(7): RCVR FIFO error indication
LSR(6): XMIT FIFO and Shift register empty
LSR(5): The XMIT FIFO empty indication
LSR(4) - LSR(1): Specify that errors have occurred. The character error status is handled in the same way as that in the interrupt mode. The IIR is not affected since IER(2)=0.
LSR(0): High whenever RCVR FIFO contains at least one byte.
No trigger level is reached or time-out condition indicated in FIFO Polled Mode.

CONFIDENTIAL

9.7 Keyboard Controller (KBC)

The keyboard controller is implemented using an 8-bit microcontroller that is capable of executing the 8042 instruction set. For general information, please refer to the description of the 8042 in the 8-bit controller handbook. In addition, the microcontroller can enter the power-down mode by executing two types of power-down instructions.

Figure 9-13. Keyboard and Mouse Interface

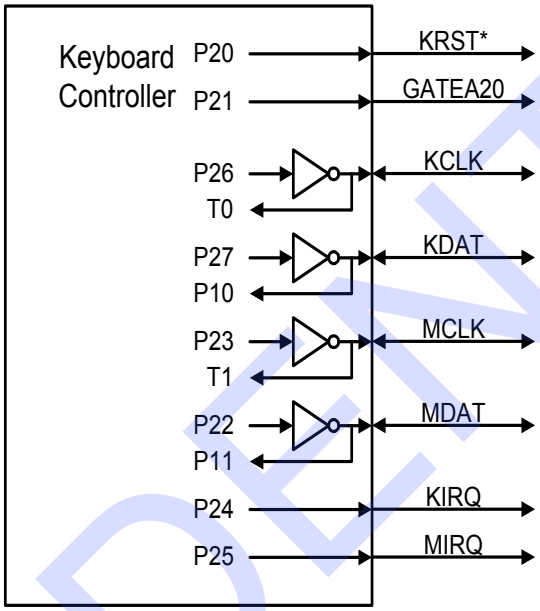

9.7.1 Host Interface

The keyboard controller interfaces with the system through the 8042 style host interface. The following table shows how the interface decodes the control signals.

Table 9-9. Data Register READ/WRITE Controls

Host Address Note	R/W*	Function
60h	R	READ DATA
60h	W	WRITE DATA, (Clear F1)
64h	R	READ Status
64h	W	WRITE Command, (Set F1)

Note: These are the default values of LDN5, 60h and 61h (DATA); LDN5, 62h and 63h (Command). All these registers are programmable.

READ DATA: This is an 8-bit **read only** register. When read, the KIRQ output is cleared and OBF flag in the status register is cleared.
WRITE DATA: This is an 8-bit **write only** register. When written, the F1 flag of the Status register is cleared and the IBF bit is set.
READ Status: This is an 8-bit **read only** register. Refer to the description of the Status register for more information.

CONFIDENTIAL

WRITE Command: This is an 8-bit **write only** register. When written, both F1 and IBF flags of the Status register are set.

CONFIDENTIAL

9.7.2 Data Registers and Status Register

The keyboard controller provides two data registers, one is DBIN for data input, and the other is DBOUT for data output. Both are 8-bit wide. A write (microcontroller) to the DBOUT will load Keyboard Data Read Buffer, set OBF flag and set the KIRQ output. A read (microcontroller) of DBIN will read the data from the Keyboard Data or Command Write Buffer and clear the IBF flag.

The status register holds information concerning the status of the data registers, the internal flags, and some user-defined status bits. Please refer to Table 9-10. Status Register below. The bit 0 OBF is set to "1" when the microcontroller writes data into DBOUT, and is cleared when the system initiates DATA READ operation. The bit 1 IBF is set to "1" when the system initiates WRITE operation, and is cleared when the microcontroller executes an "IN A, DBB" instruction. The F0 and F1 flags can be set or reset when the microcontroller executes clear and complement flag instructions. F1 also holds the system WRITE information when the system performs WRITE operation.

Table 9-10. Status Register

7	6	5	4	3	2	1	0
ST7	ST6	ST5	ST4	F1	F0	IBF	OBF

9.7.3 Keyboard and Mouse Interface

KCLK is a keyboard clock pin. Its output is the inversion of pin P26 of the microcontroller, and the input of KCLK is connected to the T0 pin of the microcontroller. KDAT is the keyboard data pin; its output is the inversion of pin P27 of the microcontroller, and the input of KDAT is connected to the P10 of the microcontroller. MCLK is the mouse clock pin. Its output is the inversion of pin P23 of the microcontroller, and the input of MCLK is connected to the T1 pin of the microcontroller. MDAT is the Mouse data pin. Its output is the inversion of pin P22 of the microcontroller, and the input of MDAT is connected to the P11 of the microcontroller. KRST# is pin P20 of the microcontroller. GATEA20 is the pin P21 of the microcontroller. These two pins are used as software-controlled or user defined outputs. External pull-ups may be required for these pins.

9.7.4 KIRQ and MIRQ

KIRQ is the interrupt request for the keyboard (Default IRQ1), and MIRQ is the interrupt request for the mouse (Default IRQ12). KIRQ is internally connected to P24 pin of the microcontroller, and MIRQ is internally connected to pin P25 of the microcontroller.

CONFIDENTIAL

9.8 Consumer Remote Control (TV Remote) IR (CIR)

9.8.1 Overview

CIR is used in the consumer remote control equipment, and is a programmable amplitude shift keyed (ASK) serial communication protocol. By adjusting frequencies, baud rate divisors and sensitivity ranges, the CIR registers are able to support the popular protocols such as RC-5, NEC, and RECS-80. Software driver programming can support new protocols.

9.8.2 Features

- Supports 30 kHz - 57 kHz (low frequency) or 400 kHz - 500 kHz (high frequency) carrier transmission
- Baud rate up to 115200 BPS (high frequency)
- Demodulation optional
- Supports transmission run-length encoding and deferral function
- 32-byte FIFO for data transmission or data reception

9.8.3 Block Diagram

CIR consists of two parts, transmitter and receiver. Regarding the transmitter part, it is responsible for transmitting data to FIFO, processing FIFO data by serialization and modulation and sending out data through the LED device. As for the receiver part, it is responsible for receiving data, processing data by demodulation and deserialization and storing data in the Receiver FIFO.

Figure 9-14. CIR Block Diagram

CONFIDENTIAL

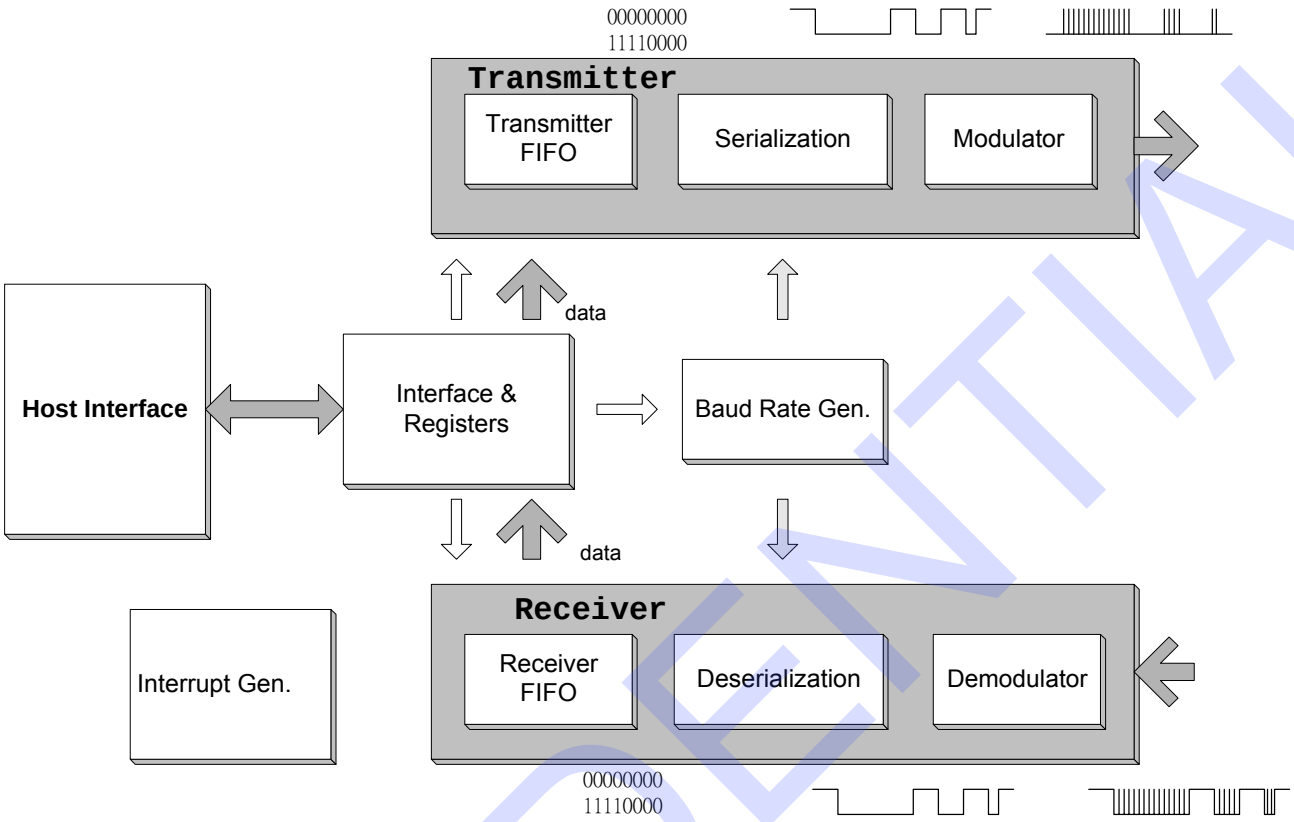

CONFIDENTIAL

9.8.4 Transmit Operation

The data written to the Transmitter FIFO will be exactly serialized from LSB to MSB, modulated with the carrier frequency and sent to the CIRTX output. The data are either in bit-string format or run-length decode.

Before the data transmission can be started, code byte write operation must be performed to the Transmitter FIFO DR. Bit TXRLE of TCR1 needs to be set to “1” before the data in run-length decode can be written into the Transmitter FIFO. Setting TXENDF of TCR1 will enable the data transmission deferral, and avoid the Transmitter FIFO underrun. The bit width of the serialized bit string is determined by the value programmed in the baud rate divisor registers, BDLR and BDHR. When the two bits, HCFS and CFQ[4:0], are set, either the high-speed or low-speed carrier range is selected, and the corresponding carrier frequency will also be determined. Bit TXMPM[1:0] and TXMPW[2:0] specify the pulse number in a bit width and the required duty cycles of the carrier pulse according to the communication protocol. Only a logic “0” can activate the Transmitter LED in the format of a series of modulating pulses.

9.8.5 Receive Operation

The Receiver function will be enabled if bit RXEN of RCR is set to “1”. Either demodulated or modulated RX# signal is loaded into Receiver FIFO, and bit RXEND of RCR determines whether the demodulation logic should be used or not. It determines the baud rate by programming the baud rate divisor registers BDLR and BDHR, and the carrier frequency by programming bit HCFS and CFQ[4:0]. Set RDWOS to “0” to synchronize. Bit RXACT of RCR is set to “1” when the serial data or the selected carrier is incoming, and the sampled data will then be kept in Receiver FIFO. Write “1” to bit RXACT to stop the Receiver operation whereas “0” to bit RXEN to disable it.

9.8.6 Register Description and Address

Table 9-11. CIR Register

Register Name	R/W	Address	Default
CIR Data Register (DR)	R/W	Base + 0h	FFh
CIR Interrupt Enable Register (IER)	R/W	Base + 1h	00h
CIR Receiver Control Register (RCR)	R/W	Base + 2h	01h
CIR Transmitter Control Register 1 (TCR1)	R/W	Base + 3h	00h
CIR Transmitter Control Register 2 (TCR2)	R/W	Base + 4h	5Ch
CIR Transmitter Status Register (TSR)	R	Base + 5h	00h
CIR Receiver Status Register (RSR)	R	Base + 6h	00h
CIR Baud Rate Divisor Low Byte Register (BDLR)	R/W	Base + 5h	00h
CIR Baud Rate Divisor High Byte Register (BDHR)	R/W	Base + 6h	00h
CIR Interrupt Identification Register (IIR)	R/W	Base + 7h	01h

CONFIDENTIAL

9.8.6.1 CIR Data Register (DR)

The DR, an 8-bit **read/write** register, is the data port for CIR. Data are transmitted and received through it.

Address: Base Address + 0h

Bit	R/W	Default	Description
7-0	R/W	FFh	**CIR Data Register (DR[7:0])** Writing data to this register causes data to be written to Transmitter FIFO. Reading data from this register causes data to be received from Receiver FIFO.

9.8.6.2 CIR Interrupt Enable Register (IER)

The IER, an 8-bit **read/write** register, is to enable the CIR interrupt request.

Address: Base Address + 1h

Bit	R/W	Default	Description
7	R/W	0b	**Transmitter Data Output Select (TX_sel)** This bit is to select transmitter data output. 0: CIRTX1 (Default) 1: CIRTX2
6	R/W	0b	**Receiver Data Input Select (RX_sel)** This bit is to select receiver data input. 0: CIRRX1 (Default) 1: CIRRX2
5	R/W	0b	**Reset** The function of this bit is software reset. Writing “1” to this bit resets register DR, IER, TCR1, BDLR, BDHR and IIR and then it will be self-cleared to the initial value.
4	R/W	0b	**Baud Rate Register Enable (BR)** This bit is to control whether the baud rate register can enable read/write function or not. 1: Enable 0: Disable
3	R/W	0b	**Interrupt Enable Control (IEC)** This bit is to control whether the interrupt function can be enabled or not. 1: Enable 0: Disable
2	R/W	0b	**Receiver FIFO Overrun Interrupt Enable (RFOIE)** This bit is to control Receiver FIFO Overrun Interrupt request. 1: Enable 0: Disable
1	R/W	0b	**Receiver Data Available Interrupt Enable (RDAIE)** This bit is to enable Receiver Data Available Interrupt request. The Receiver will generate this interrupt when the data available in FIFO exceed the FIFO threshold level. 1: Enable 0: Disable

CONFIDENTIAL

Bit	R/W	Default	Description
0	R/W	0b	**Transmitter Low Data Level Interrupt Enable (TLDLIE)** This bit is to enable Transmitter Low Data Level Interrupt request. The Transmitter will generate this interrupt when the data available in FIFO are less than the FIFO threshold Level. 1: Enable 0: Disable

CONFIDENTIAL

9.8.6.3 CIR Receiver Control Register (RCR)

The RCR, an 8-bit **read/write** register, is to control the CIR Receiver.

Address: Base Address + 2h

Bit	R/W	Default	Description
7	R/W	0b	**Receiver Data without Sync. (RDWOS)** This bit is to control the sync. logic for received data. Set this bit to "1" to obtain the received data without sync. logic. Set this bit to "0" to obtain the received data with sync. logic.
6	R/W	0b	**High-Speed Carrier Frequency Select (HCFS)** This bit is to select the carrier frequency between the high-speed and low-speed. 0: 30-58 kHz (Default) 1: 400-500 kHz
5	R/W	0b	**Receiver Enable (RXEN)** This bit is to enable the Receiver function. Receiver Enable and RXACT will be activated if the selected carrier frequency is received. 1: Enable 0: Disable
4	R/W	0b	**Receiver Demodulation Enable (RXEND)** This bit is to control the Receiver Demodulation logic. If the Receiver device can not demodulate the correct carrier, set this bit to "1" to enable it. 1: Enable 0: Disable
3	R/W	0b	**Receiver Active (RXACT)** This bit is to control the Receiver operation. This bit is set to "0" when the Receiver is inactive. This bit will be set to "1" when the Receiver detects a pulse (RXEND=0) or pulse-train (RXEND=1) with the correct carrier frequency. The Receiver then starts to sample the input data when Receiver Active is set. Write a "1" to this bit to clear the Receiver Active condition and make the Receiver enter the inactive mode.
2-0	R/W	001b	**Receiver Demodulation Carrier Range (RXDCR[2:0])** These three bits are to set the tolerance of the Receiver. For the detailed demodulation carrier frequency, please refer to Table 9-13. Receiver Demodulation Low Frequency (HCFS = 0) and Table 9-14. Receiver Demodulation High Frequency (HCFS = 1) on page 131 and 132.

CONFIDENTIAL

9.8.6.4 CIR Transmitter Control Register 1 (TCR1)

The TCR1, an 8-bit **read/write** register, is used to control the Transmitter.

Address: Base Address + 3h

Bit	R/W	Default	Description
7	R/W	0b	**FIFO Clear (FIFOCLR)** Writing a "1" to this bit clears FIFO. This bit is then self-cleared to "0".
6	R/W	0b	**Internal Loopback Enable (ILE)** This bit is to execute internal loopback for test and must be "0" in normal operation. 1: Enable 0: Disable
5-4	R/W	0b	**FIFO Threshold Level (FIFOTL)** These two bits are used to set the FIFO threshold level. The FIFO length is 32 bytes for TX or RX function (ILE = 0) in normal operation and 16 bytes for both TX and RX in the internal loopback mode (ILE = 1). **16-Byte Mode** / **32-Byte Mode** 00: 1 / 1 (Default) 01: 3 / 7 10: 7 / 17 11: 13 / 25
3	R/W	0b	**Transmitter Run Length Enable (TXRLE)** This bit controls the Transmitter Run Length encoding/decoding mode, which condenses a series of "1" or "0" into one byte with the bit value stored in bit 7 and number of bits minus 1 in bit 6-0. 1: Enable 0: Disable
2	R/W	0b	**Transmitter Deferral (TXENDF)** This bit is to avoid Transmitter underrun condition. When this bit is set to "1", the Transmitter FIFO data will be kept until the transmitter time-out condition occurs, or FIFO reaches full.
1-0	R/W	0b	**Transmitter Modulation Pulse Mode (TXMPM[1:0])** These two bits are to define the Transmitter modulation pulse mode. **TXMPM[1:0]** — **Modulation Pulse Mode** C_pls mode (Default): Pulses are generated continuously for the entire logic 0 bit period. 8_pls mode: 8 pulses are generated for each logic 0 bit. 6_pls mode: 6 pulses are generated for each logic 0 bit. 11: Reserved.

CONFIDENTIAL

9.8.6.5 CIR Transmitter Control Register (TCR2)

The TCR2, an 8-bit **read/write** register, is to determine the carrier frequency.

Address: Base Address + 4h

Bit	R/W	Default	Description
7-3	R/W	01011b	**Carrier Frequency (CFQ[4:0])** These five bits are to determine the modulation carrier frequency. Please refer to the following table.
2-0	R/W	100b	**Transmitter Modulation Pulse Width (TXMPW[2:0])** These three bits are to set the Transmitter Modulation pulse width. The duty cycle of the carrier will be determined according to the setting of the carrier frequency and the selection of Transmitter Modulation pulse width. **TXMPW[2:0]** / **HCFS = 0** / **HCFS = 1** 000 / Reserved / Reserved 001 / Reserved / Reserved 010 / 6 μs / 0.7 μs 011 / 7 μs / 0.8 μs **100** / **8.7 μs** / **0.9 μs (Default)** 101 / 10.6 μs / 1.0 μs 110 / 13.3 μs / 1.16 μs 111 / Reserved / Reserved

CONFIDENTIAL

Table 9-12. Modulation Carrier Frequency

CFQ	Low Frequency (HCFS =0)	High Frequency (HCFS = 1)
00000	27 kHz	-
00010	29 kHz	-
00011	30 kHz	400 kHz
00100	31 kHz	-
00101	32 kHz	-
00110	33 kHz	-
00111	34 kHz	-
01000	35 kHz	450 kHz
01001	36 kHz	-
01010	37 kHz	-
01011	**38 kHz (default)**	**480 kHz (default)**
01100	39 kHz	-
01101	40 kHz	500 kHz
01110	41 kHz	-
01111	42 kHz	-
10000	43 kHz	-
10001	44 kHz	-
10010	45 kHz	-
10011	46 kHz	-
10100	47 kHz	-
10101	48 kHz	-
10110	49 kHz	-
10111	50 kHz	-
11000	51 kHz	-
11001	52 kHz	-
11010	53 kHz	-
11011	54 kHz	-
11100	55 kHz	-
11101	56 kHz	-
11110	57 kHz	-
11111	58 kHz	-

CONFIDENTIAL

Table 9-13. Receiver Demodulation Low Frequency (HCFS = 0)

RXDCR	001		010		011		100		101		110		
CFQ	Min.	Max.	Min.	Max.	Min.	Max.	Min.	Max.	Min.	Max.	Min.	Max.	(Hz)
00001	26.25	29.75	24.5	31.5	22.75	33.25	21	35	19.25	36.75	17.5	38.5	28k
00010	27.19	30.81	25.38	32.63	23.56	34.44	21.75	36.25	19.94	38.06	18.13	39.88	29k
00011	28.13	31.88	26.25	33.75	24.38	35.63	22.5	37.5	20.63	39.38	18.75	41.25	30k
00100	29.06	32.94	27.13	34.88	25.19	36.81	23.25	38.75	21.31	40.69	19.38	42.63	31k
00101	30	34	28	36	26	38	24	40	22	42	20	44	32k
00110	30.94	35.06	28.88	37.13	26.81	39.19	24.75	41.25	22.69	43.31	20.63	45.38	33k
00111	31.88	36.13	29.75	38.25	27.63	40.38	25.5	42.5	23.38	44.63	21.25	46.75	34k
01000	32.81	37.19	30.63	39.38	28.44	41.56	26.25	43.75	24.06	45.94	21.88	48.13	35k
01001	33.75	38.25	31.5	40.5	29.25	42.75	27	45	24.75	47.25	22.5	49.5	36k
01010	34.69	39.31	32.38	41.63	30.06	43.94	27.75	46.25	25.44	48.56	23.13	50.88	37k
01011	**35.63**	**40.38**	**33.25**	**42.75**	**30.88**	**45.13**	**28.5**	**47.5**	**26.13**	**49.88**	**23.75**	**52.25**	**38k**
01100	36.56	41.44	34.13	43.88	31.69	46.31	29.25	48.75	26.81	51.19	24.38	53.63	39k
01101	37.5	42.5	35	45	32.5	47.5	30	50	27.5	52.5	25	55	40k
01110	38.44	43.56	35.88	46.13	33.31	48.69	30.75	51.25	28.19	53.81	25.63	56.38	41k
01111	39.38	44.63	36.75	47.25	34.13	49.88	31.5	52.5	28.88	55.13	26.25	57.75	42k
10000	40.31	45.69	37.63	48.38	34.94	51.06	32.25	53.75	29.56	56.44	26.88	59.13	43k
10001	41.25	46.75	38.5	49.5	35.75	52.25	33	55	30.25	57.75	27.5	60.5	44k
10010	42.19	47.81	39.38	50.63	36.56	53.44	33.75	56.25	30.94	59.06	28.13	61.88	45k
10011	43.13	48.88	40.25	51.75	37.38	54.63	34.5	57.5	31.63	60.38	28.75	63.25	46k
10100	44.06	49.94	41.13	52.88	38.19	55.81	35.25	58.75	32.31	61.69	29.38	64.63	47k
10101	45	51	42	54	39	57	36	60	33	63	30	66	48k
10110	45.94	52.06	42.88	55.13	39.81	58.19	36.75	61.25	33.69	64.31	30.63	67.38	49k
10111	46.88	53.13	43.75	56.25	40.63	59.38	37.5	62.5	34.38	65.63	31.25	68.75	50k
11000	47.81	54.19	44.63	57.38	41.44	60.56	38.25	63.75	35.06	66.94	31.88	70.13	51k
11001	49.18	54.55	46.88	57.69	44.78	61.22	42.86	65.22	41.1	69.77	39.47	75	52k
11010	49.69	56.31	46.38	59.63	43.06	62.94	39.75	66.25	36.44	69.56	33.13	72.88	53k
11011	50.63	57.38	47.25	60.75	43.88	64.13	40.5	67.5	37.13	70.88	33.75	74.25	54k
11100	51.56	58.44	48.13	61.88	44.69	65.31	41.25	68.75	37.81	72.19	34.38	75.63	55k
11101	52.5	59.5	49	63	45.5	66.5	42	70	38.5	73.5	35	77	56k
11110	53.44	60.56	49.88	64.13	46.31	67.69	42.75	71.25	39.19	74.81	35.63	78.38	57k

CONFIDENTIAL

Table 9-14. Receiver Demodulation High Frequency (HCFS = 1)

RXDCR	001		010		011		100		101		110		
CFQ	Min.	Max.	Min.	Max.	Min.	Max.	Min.	Max.	Min.	Max.	Min.	Max.	(Hz)
00011	375	425	350	450	325	475	300	500	275	525	250	550	400k
01000	421.9	478.1	393.8	506.3	365.6	534.4	337.5	562.5	309.4	590.6	281.3	618.8	450k
01011	450	510	420	540	390	570	360	600	330	630	300	660	**480k**
01011	468.8	531.3	437.5	562.5	406.3	593.8	375	625	343.8	656.3	312.5	687.5	500k

9.8.6.6 CIR Transmitter Status Register (TSR)

The TSR, an 8-bit **read only** register, provides the Transmitter FIFO status.

Address: Base Address + 5h

Bit	R/W	Default	Description
7-6	R	-	**Reserved**
5-0	R	000000b	**Transmitter FIFO Byte Count (TXFBC[5:0])** Return the number of bytes left in the Transmitter FIFO.

9.8.6.7 CIR Receiver FIFO Status Register (RSR)

The RSR, an 8-bit **read only** register, provides the Receiver FIFO status.

Address: Base Address + 6h

Bit	R/W	Default	Description
7	R	0b	**Receiver FIFO Time-out (RXFTO)** This bit will be set to "1" when a Receiver FIFO time-out condition occurs. Followings are the conditions required for the occurrence of Receiver FIFO time-out: 1. At least one byte of data are queued in the Receiver FIFO for more than 64 ms. 2. The Receiver has been inactive (RXACT=0) for more than 64 ms.
6	-	-	**Reserved**
5-0	R	000000b	**Receiver FIFO Byte Count (RXFBC)** Return the number of bytes left in Receiver FIFO.

9.8.6.8 CIR Baud Rate Divisor Low Byte Register (BDLR)

The BDLR, an 8-bit **read/write** register, is to program the CIR Baud Rate clock.

Address: Base Address + 5h (when BR = 1)

Bit	R/W	Default	Description
7-0	R/W	00h	**Baud Rate Divisor Low Byte (BDLR[7:0])** These bits, for dividing the Baud Rate clock, are the low byte of the register.

CONFIDENTIAL

9.8.6.9 CIR Baud Rate Divisor High Byte Register (BDHR)

The BDHR, an 8-bit **read/write** register, is used to program the CIR Baud Rate clock.

Address: Base Address + 6h (when BR = 1)

Bit	R/W	Default	Description
7-0	R/W	00h	**Baud Rate Divisor High Byte (BDHR[7:0])** These bits, for dividing the Baud Rate clock, are the high byte of the register.

Baud rate divisor = 115200 / baud rate
Ex1: 2400 bps → 115200 /2400 = 48 → 48(d) = 0030(h) → BDHR = 00h, BDLR = 30h
Ex2: bit width = 0.565 ms (1770 bps (115200 / 1770 = 65(d) = 0041(h) (BDHR = 00(h), BDLR = 41(h)

9.8.6.10 CIR Interrupt Identification Register (IIR)

The IIR, an 8-bit register, is to identify the pending interrupt.

Address: Base address + 7h

Bit	R/W	Default	Description
7-3	-	-	**Reserved**
2-1	R	00b	**Interrupt Identification** These two bits are to identify the source of the pending interrupt. **IIR[1:0]** **Interrupt Source** 00 No interrupt 01 Transmitter Low Data Level Interrupt 10 Receiver Data Stored Interrupt 11 Receiver FIFO Overrun Interrupt
0	R	1b	**Interrupt Pending** This bit will be set to “1” while an interrupt is pending.

CONFIDENTIAL

This page is intentionally left blank.

CONFIDENTIAL

10. DC Electrical Characteristics

Operating Conditions

3VSB/SYS_3VSB/AVCC3 .....3.3V ± 0.15V

VBAT..... 2.3V to 3.0V

Operation Temperature (Topt).....0°C to +70°C

Absolute Maximum Ratings*

Applied Voltage..... -0.3V to 3.6V

Input Voltage (Vi)..... -0.3V to VCC3 + 0.3V

Output Voltage (Vo)..... -0.3V to VCC3 + 0.3V

Storage Temperature ..... -55°C to +125°C

***Comments**

Stresses above those listed under "Absolute Maximum Ratings" may cause permanent damage to this device. These are stress ratings only. Functional operation of this device at these or any other conditions above those indicated in the operational sections of this specification is not implied or intended. Exposure to the absolute maximum rating conditions for extended periods may affect device reliability.

DC Electrical Characteristics(VCC3=3.3V±5%, Ta=0°C~70°C)

Symbol	Parameter	Condition	Min.	Typ.	Max.	Unit
DO8 Buffer						
V_{OL}	Low Output Voltage	I_{OL} = 8 mA			0.4	V
V_{OH}	High Output Voltage	I_{OH} = -8 mA	2.4			V
DOD8 Buffer						
V_{OL}	Low Output Voltage	I_{OL} = 8 mA			0.4	V
DIO8 Type Buffer						
V_{OL}	Low Output Voltage	I_{OL} = 8 mA			0.4	V
V_{OH}	High Output Voltage	I_{OH} = -8 mA	2.4			V
V_{IL}	Low Input Voltage				0.8	V
V_{IH}	High Input Voltage		2.2			V
I_{IL}	Low Input Leakage	V_{IN} = 0			10	μA
I_{IH}	High Input Leakage	V_{IN} = VCC3			-10	μA
I_{OZ}	3-state Leakage				20	μA
DIOD8 Type Buffer						
V_{OL}	Low Output Voltage	I_{OL} = 8 mA			0.4	V
V_{IL}	Low Input Voltage				0.8	V
V_{IH}	High Input Voltage		2.2			V
I_{IL}	Low Input Leakage	V_{IN} = 0			10	μA
I_{IH}	High Input Leakage	V_{IN} = VCC3			-10	μA
I_{OZ}	3-state Leakage				20	μA

CONFIDENTIAL

DC Electrical Characteristics

Symbol	Parameter	Condition	Min.	Typ.	Max.	Unit
DIO16 Type Buffer						
V_{OL}	Low Output Voltage	I_{OL} = 16 mA			0.4	V
V_{OH}	High Output Voltage	I_{OH} = -16 mA	2.4			V
V_{IL}	Low Input Voltage				0.8	V
V_{IH}	High Input Voltage		2.2			V
I_{IL}	Low Input Leakage	V_{IN} = 0			10	µA
I_{IH}	High Input Leakage	V_{IN} = VCC3			-10	µA
I_{OZ}	3-state Leakage				20	µA
DIOD16 Type Buffer						
V_{OL}	Low Output Voltage	I_{OL} = 16 mA			0.4	V
V_{IL}	Low Input Voltage				0.8	V
V_{IH}	High Input Voltage		2.2			V
I_{IL}	Low Input Leakage	V_{IN} = 0			10	µA
I_{IH}	High Input Leakage	V_{IN} = VCC3			-10	µA
I_{OZ}	3-state Leakage				20	µA
DO24L Buffer						
V_{OL}	Low Output Voltage	I_{OL} = 24 mA			0.4	V
V_{OH}	High Output Voltage	I_{OH} = -8 mA	2.4			V
DIO24 Type Buffer						
V_{OL}	Low Output Voltage	I_{OL} = 24 mA			0.4	V
V_{OH}	High Output Voltage	I_{OH} = -16 mA	2.4			V
V_{IL}	Low Input Voltage				0.8	V
V_{IH}	High Input Voltage		2.2			V
I_{IL}	Low Input Leakage	V_{IN} = 0			10	µA
I_{IH}	High Input Leakage	V_{IN} = VCC3			-10	µA
I_{OZ}	3-state Leakage				20	µA
DI Type Buffer						
V_{IL}	Low Input Voltage				0.8	V
V_{IH}	High Input Voltage		2.2			V
V_{IH}	High Input Voltage(clock)		2.2			V
I_{IL}	Low Input Leakage	V_{IN} = 0				µA
I_{IH}	High Input Leakage	V_{IN} = VCC3				µA

CONFIDENTIAL

Symbol	Parameter	Condition	Min.	Typ.	Max.	Unit
AI Type Buffer for AMD CPU power sequence function						
V_{trig}	Trigger point for VCORE(0.8V)	VREF=2.8V	-	0.72	-	V
V_{hyst}	Hysteresis for VCORE(0.8V)		-	100	-	mV
V_{trig}	Trigger point for VDIMM_STR	VREF=2.8V	-	1.35V	-	V
V_{hyst}	Hysteresis for VDIMM_STR		-	130	-	mV
V_{trig}	Trigger point for VLDT_12	VREF=2.8V	-	1.0	-	V
V_{hyst}	Hysteresis for VLDT_12		-	100	-	mV

CONFIDENTIAL

This page is intentionally left blank.

CONFIDENTIAL

11. AC Characteristics

11.1 Clock Input Timings

Symbol	Parameter	Min.	Typ.	Max.	Unit
t_1	Clock High Pulse Width when CLKIN=48 MHz[1]	8			nsec
t_2	Clock Low Pulse Width when CLKIN=48 MHz[1]	8			nsec
t_3	Clock Period when CLKIN=48 MHz[1]	20	21	22	nsec
t_4	Clock High Pulse Width when CLKIN=24 MHz[1]	18			nsec
t_5	Clock Low Pulse Width when CLKIN=24 MHz[1]	18			nsec
t_6	Clock Period when CLKIN=24 MHz[1]	40			nsec

Not tested. Guaranteed by design.

Figure 11-1. Clock Input Timings

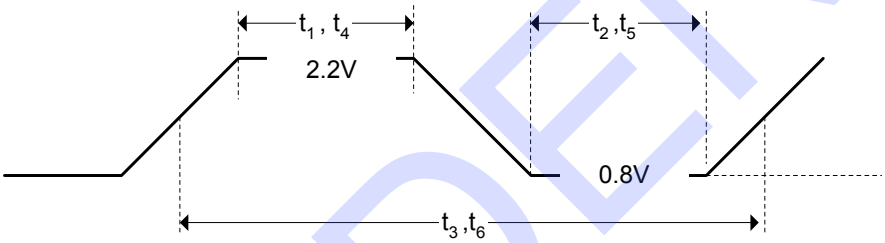

CONFIDENTIAL

11.2 LCLK (PCICLK) and LRESET Timings

Symbol	Parameter	Min.	Typ.	Max.	Unit
t_1	LCLK Cycle Time	28			nsec
t_2	LCLK High Time	11			nsec
t_3	LCLK Low Time	11			nsec
t_4	LRESET# Low Pulse Width	1.5			μsec

Figure 11-2. LCLK (PCICLK) and LRESET Timings

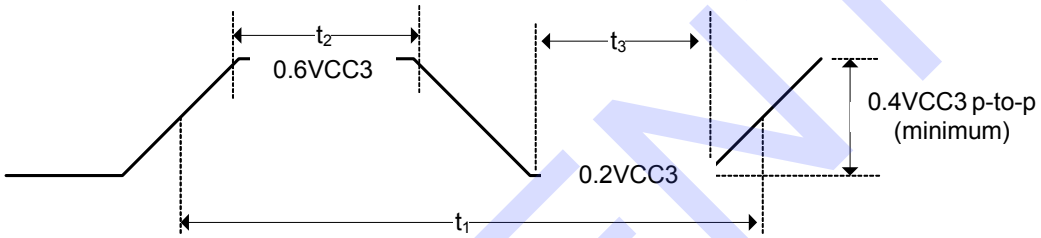

CONFIDENTIAL

11.3 LPC and SERIRQ Timings

Symbol	Parameter	Min.	Typ.	Max.	Unit
t_1	Float to Active Delay	3			nsec
t_2	Output Valid Delay			13	nsec
t_3	Active to Float Delay			20	nsec
t_4	Input Setup Time	9			nsec
t_5	Input Hold Time	3			nsec

Figure 11-3. LPC and SERIRQ Timings

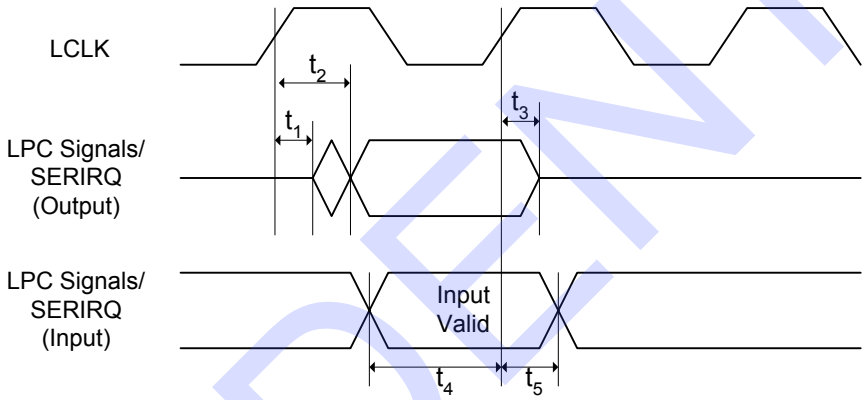

CONFIDENTIAL

11.4 Serial Port, ASKIR, SIR and Consumer Remote Control Timings

Symbol	Parameter	Conditions	Min.	Max.	Unit
t_1	Single Bit Time in Serial Port and ASKIR	Transmitter	t_{BTN} – 25 Note1	t_{BTN} + 25	nsec
		Receiver	t_{BTN} – 2%	t_{BTN} + 2%	nsec
t_2	Modulation Signal Pulse Width in ASKIR	Transmitter	950	1050	nsec
		Receiver	500		nsec
t_3	Modulation Signal Period in ASKIR	Transmitter	1975	2025	nsec
		Receiver	2000X(23/24)	2000X(25/24)	nsec
t_4	SIR Signal Pulse Width	Transmitter, Variable	(3/16) x t_{BTN} – 25	(3/16) x t_{BTN} + 25	nsec
		Transmitter, Fixed	1.48	1.78	μsec
		Receiver	1		μsec

Note 1: t_{BTN} is the nominal bit time in Serial Port, ASKIR, and SIR. It is determined by the setting on the Baud Rate Divisor registers.

Figure 11-4. Serial Port, ASKIR, SIR and Consumer Remote Control Timings

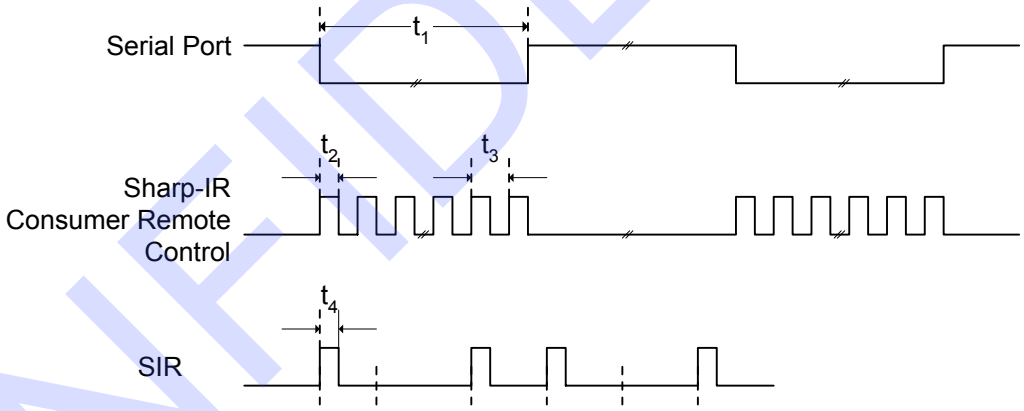

CONFIDENTIAL

11.5 Modem Control Timings

Symbol	Parameter	Min.	Typ.	Max.	Unit
t_1	Float to active delay			40	nsec

Figure 11-5. Modem Control Timings

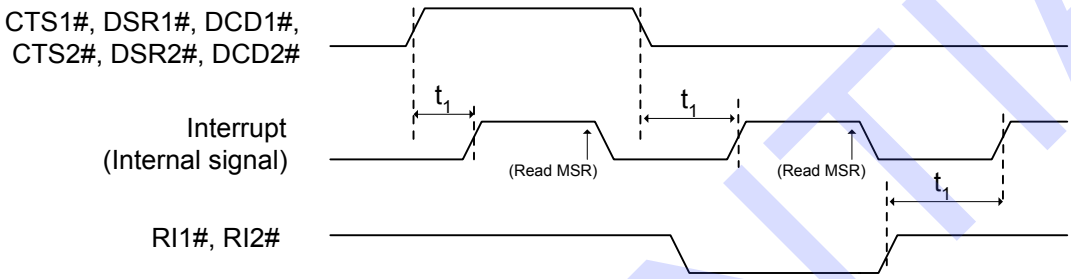

CONFIDENTIAL

11.6 Keyboard/Mouse Receive/Send Data Timings

Symbol	Parameter	Min.	Typ.	Max.	Unit
t_1	Time form DATA transition to falling edge of CLK (Receive)	5		25	μsec
t_2	Time form rising edge of CLK to DATA transition (Receive)	5		T4-5	μsec
t_3	Duration of CLK inactive (Receive/Send)	30		50	μsec
t_4	Duration of CLK active (Receive/Send)	30		50	μsec
t_5	Time to keyboard inhibit after clock 11 to ensure the keyboard device does not start another transmission (Receive)	>0	50		μsec
t_6	Time from inactive to active CLOCK transition, used to time when the auxiliary device samples DATA (Send)	5		25	μsec

Note: (1) The system can hold the 'clock' signal inactive to inhibit the next transmission.
(2) The system raises the 'clock' line to allow the next transmission.

Figure 11-6. Keyboard/Mouse Receive/Send Data Timings

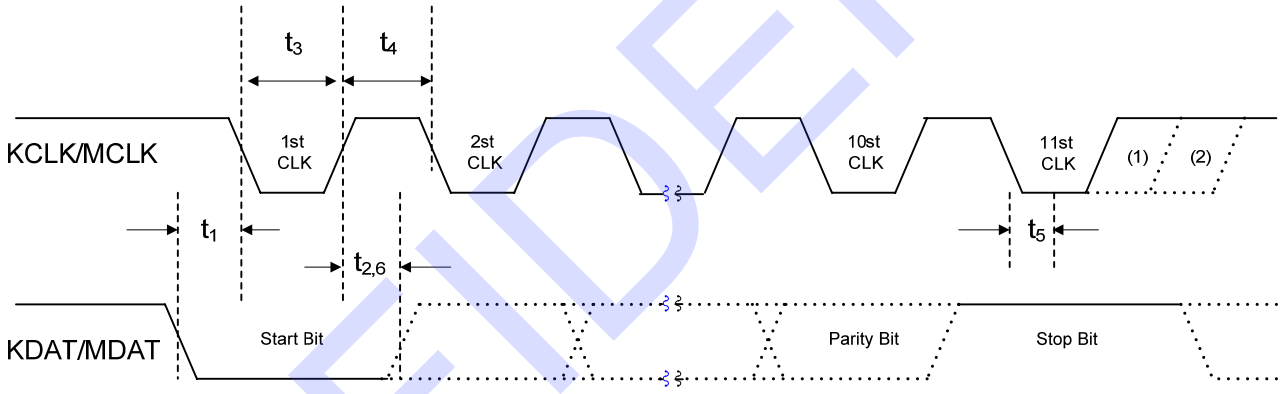

CONFIDENTIAL

11.7 RSMRST# and ACPI Power Control Signal Timings

Symbol	Parameter	Typ.	Unit
t_1	RSMRST# de-actives delay from 3VSB=3V	75	msec
$t_{2*Note1}$	PWRGD3 active delay from 0.8 * AVCC3	Reference: Section 11.8	msec
t_3	Overlap of PSON# and 3VSBSW#	10	msec
t_4	Delay time of 3VSBSW# falling edge to PWRGD3 falling edge	<1	msec
t_5	Delay time of 3VSBSW# rising edge to PWRGD3 rising edge	1 Note:2A<Bit 0>=0 (Default)	usec
$t_{5'}$		135 Note:2A<Bit 0>=1	msec

Figure 11-7. RSMRST# Timings

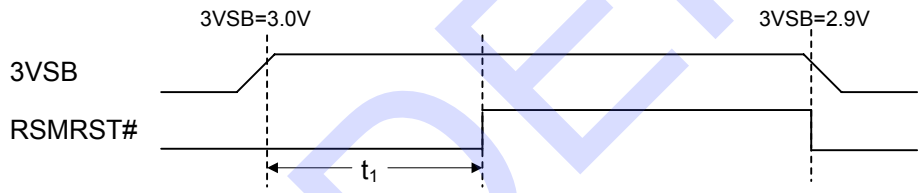

Figure 11-8. PWRGD3 Timings

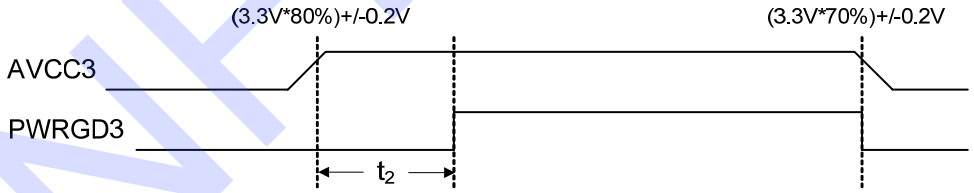

Figure 11-9. ACPI Power Signal Timings

CONFIDENTIAL

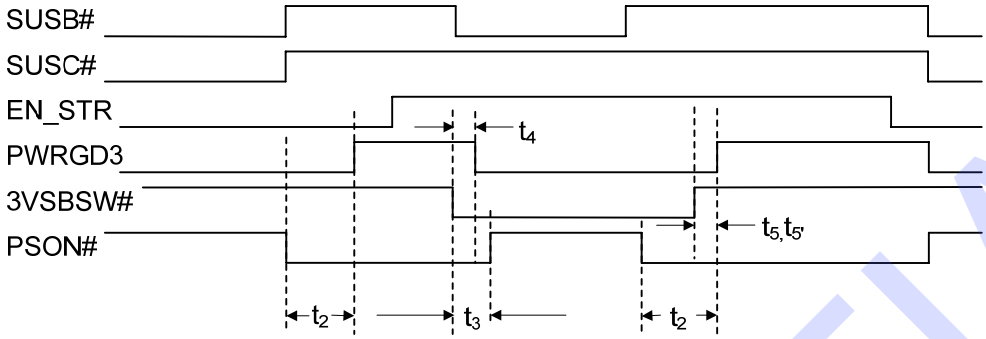

CONFIDENTIAL

11.8 PWRGD1, PWRGD2, PWRGD3 Signal Timings

Symbol	Parameter	Min.	Typ.	Max.
t_6	Delay time of (3V/5V/12V reach 80% detected AND SUSB#) to internal_GD.		<1ms	
t_7 *	Delay time of internal_GD to PWRGD1 rising edge	30ms	33ms	36ms
t_8 *	Delay time of internal_GD to PWRGD2 rising edge	50ms	55ms	60ms
t_9 *	Delay time of internal_GD to PWRGD3 rising edge	150ms	165ms	180ms
t_{10}	Delay time of SUSB# falling edge to PWRGD falling edge		< 1ms.	

Note: IT8772E supports PWRGD1 (pin1) and PWRGD3 (pin35) only.

Figure 11-10. PWRGD1/2/3 Signal Condition

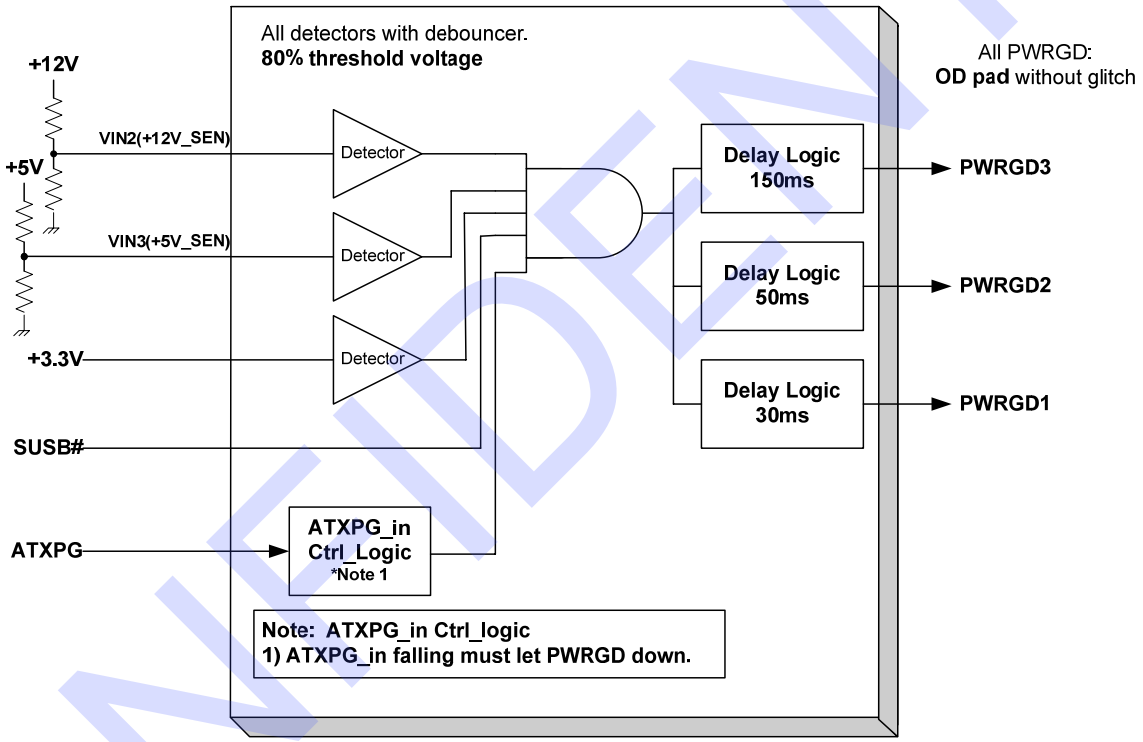

CONFIDENTIAL

Figure 11-11. PWRGD1/2/3 Signal Timings

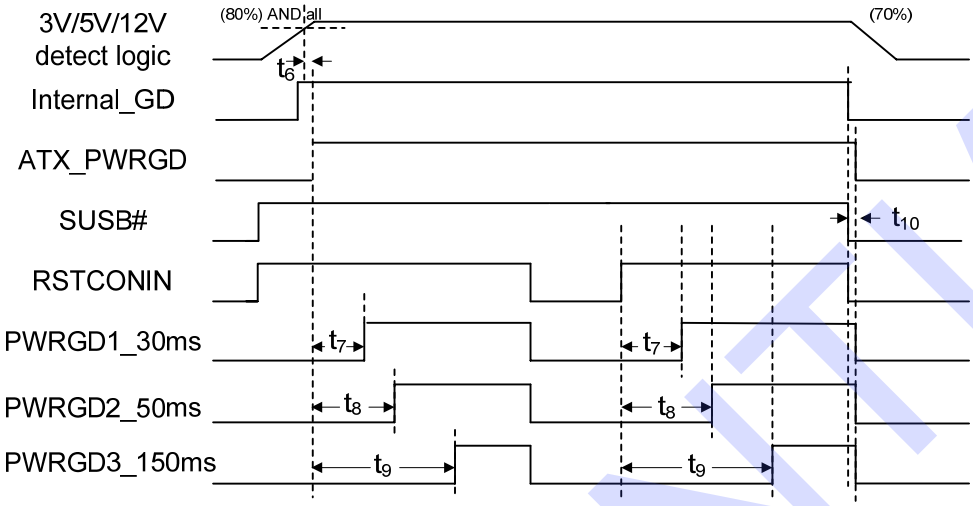

CONFIDENTIAL

11.9 Energy-using Product (EuP) Power Control Signal Timings

Symbol	Parameter	Min.	Typ.	Max.
t_{11}	Delay time of RSMRST# rising to first PWRON# pulse.	-	200ms	-
t_{12}	Delay time of AVCC3 falling edge to 5VSB_CTRL# rising edge.	-	5.2s	-

Figure 11-12. EuP Function Signal Timings

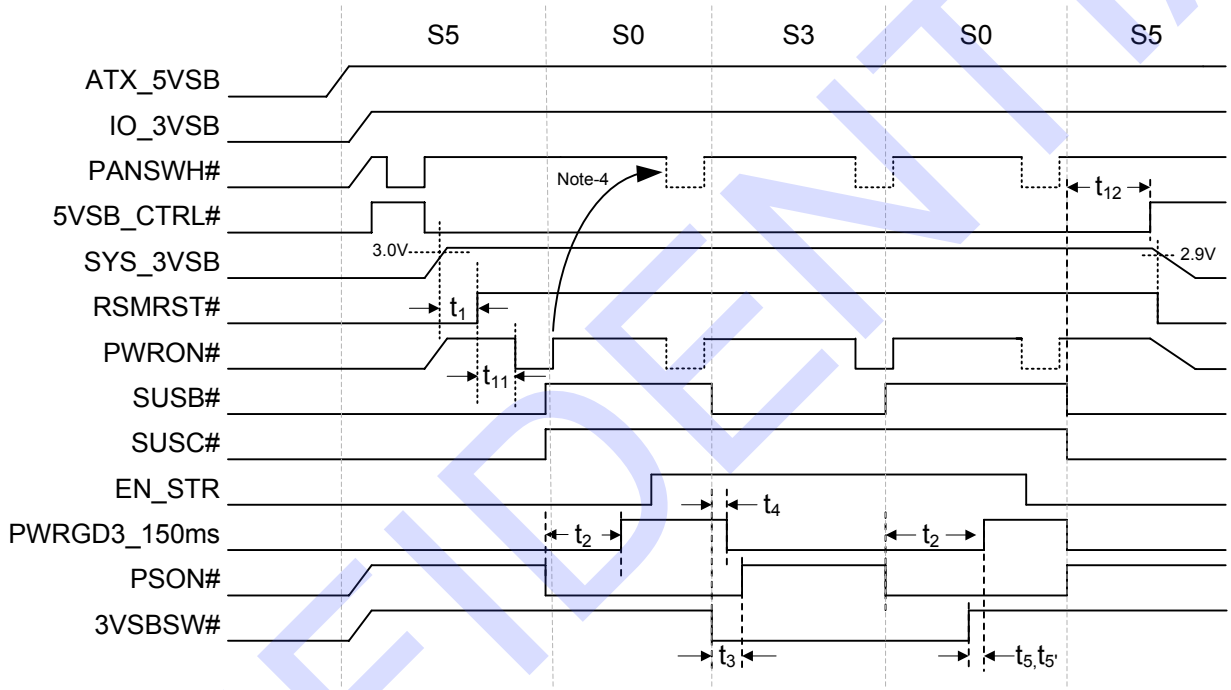

CONFIDENTIAL

11.10 5VAUX_SW Power Control Signal Timings

Figure 11-13. 5VAUX_SW Signal Timings

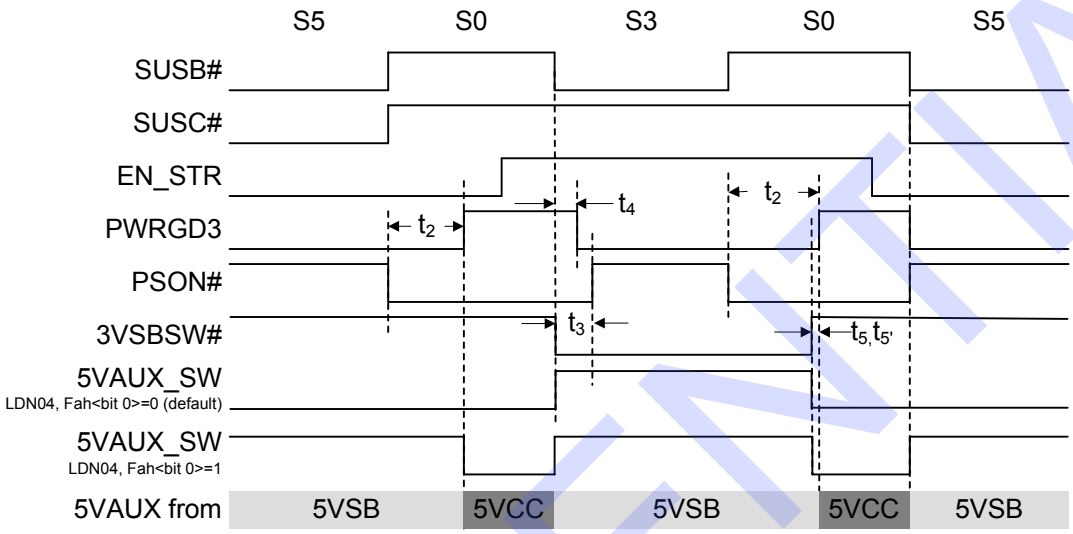

CONFIDENTIAL

11.11 AMD K8 Power Sequence

Figure 11-14. AMD K8 Power Sequence Timings

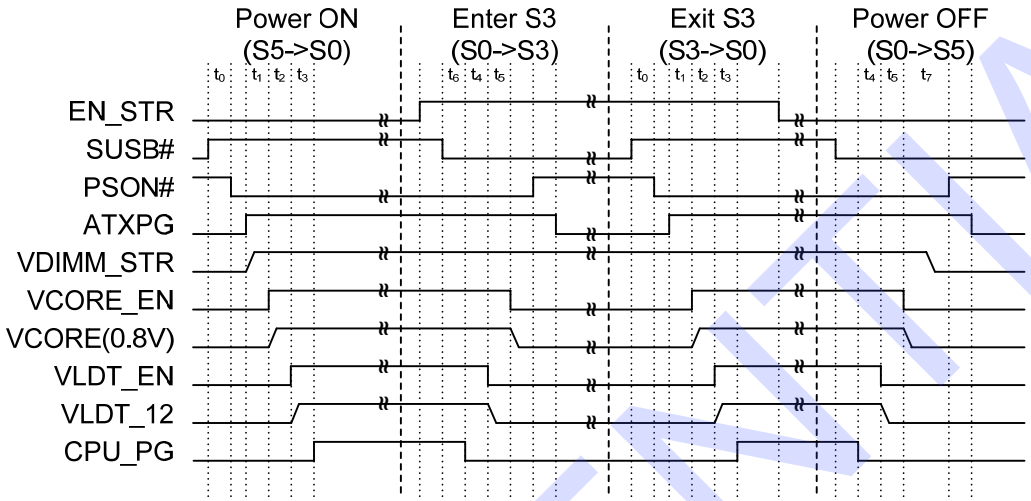

Table 11-1. Power Sequence AC Timing Parameter

Symbol	Typ.	Description
t_0	1.5ms	The rising edge of SUSB# to the assertion of PSON#.
t_1	2ms + t_vdimm_gd	Both ATXPG & VDIMM_STR ready to the rising edge of VCORE_EN. The t_vdimm_gd is the rise time of the VDIMM_STR voltage from 0V to 1.35V.
t_2	50us + t_vcore_gd	The rising edge of VCORE_EN to the rising edge of VLDT_EN. The t_vcore_gd is the rise time of the VCORE(0.8V) voltage from 0V to 0.72V.
t_3	2ms + t_vldt_gd	The rising edge of VLDT_EN to the rising of CPU_PG. The t_vldt_gd is the rise time of the VLDT_12 voltage from 0V to 1.0V.
t_4	50us	The de-assertion of CPU_PG to the de-assertion of VLDT_EN.
t_5	10ms	The de-assertion of VLDT_EN to the de-assertion of VCORE_EN.
t_6	1.5ms	The falling edge of SUSB# to the de-assertion of CPU_PG.
t_7	210ms	The falling edge of VCORE(0.8V) to the rising edge of PSON#

CONFIDENTIAL

11.12 DSW Timings

Figure 11-15. DPWORK Timings

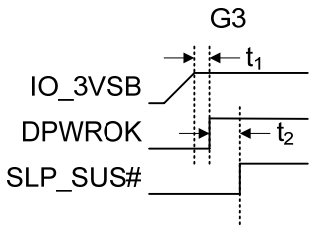

Figure 11-16. DSW Timings

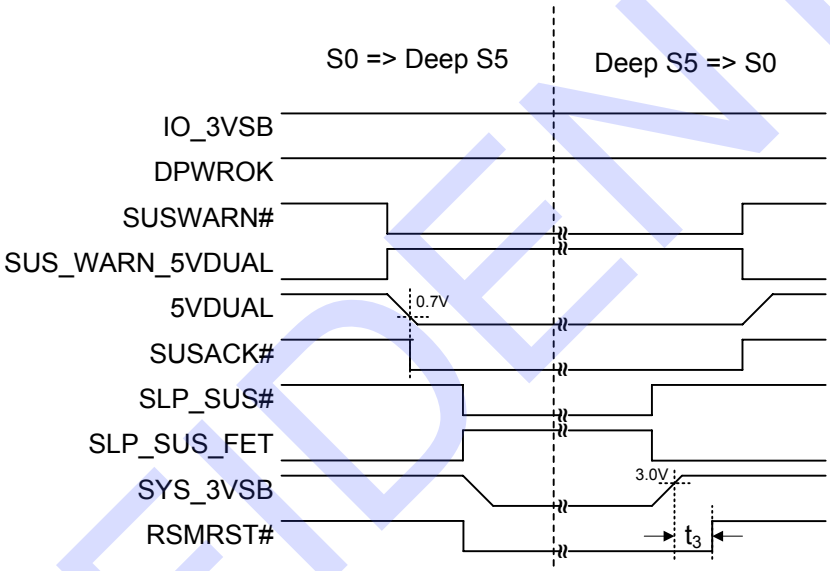

Table 11-2. DSW Timings Parameter

Symbol	Typ.	Description
t_1	12ms	The rising edge of IO_3VSB to rising edge of DPWORK
t_2	by SB	The rising edge of IO_3VSB to rising edge of SLP_SUS#
t_3	75ms	SYS_3VSB voltage over 3.0V to the rising edge of RSMRST#

CONFIDENTIAL

11.13 UVP/OVP Timings

Table 11-3. UVP/OVP Timings Parameter

Symbol	Typ.	Description
t_2	LND4\F9h<4-3> 00: 0.5s 01: 1s (default) 10: 2s 11: 4s	PSON# Pull-up Time for Notice Mode

Table 11-4. UVP/OVP Detecting Voltage Threshold

Detected PIN	+12V_SEN(VIN2)		+5V_SEN(VIN3)		+3.3V_SEN(AVCC3)	
UVP/OVP	OVP	UVP	OVP	UVP	OVP	UVP
Threshold	2.40±0.05V	1.49±0.05V	2.40±0.05V	1.45±0.05V	3.90±0.1V	2.40±0.1V

Note: The UVP / OVP voltage range is determined by Figure 11-17. UVP/OVP Application. Changing the resistance value will result in the change of the UVP / OVP voltage range. It is recommended to use the resistance value shown in Figure 11-17. UVP/OVP Application.

Figure 11-17. UVP/OVP Application

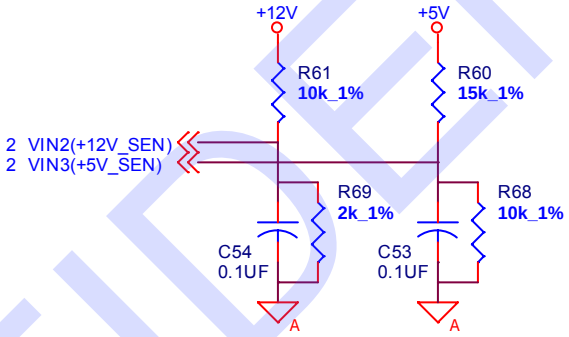

11.13.1 Notice Mode

Figure 11-18. UVP/OVP Force Mode Timings

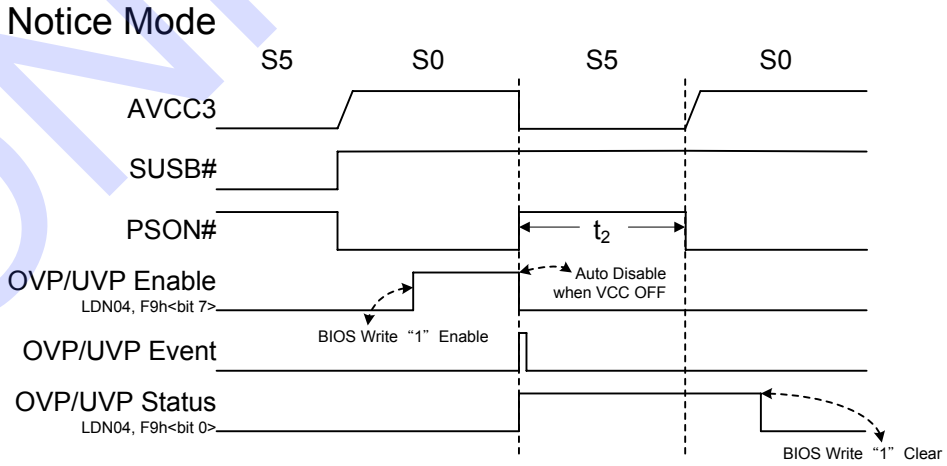

CONFIDENTIAL

This page is intentionally left blank.

CONFIDENTIAL

12. Package Information

LQFP 64L Outline Dimensions unit: inches/mm

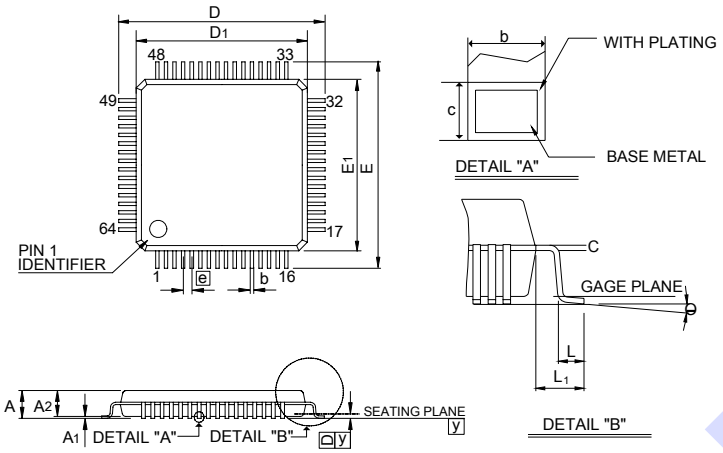

Symbol	Dimensions in inches			Dimensions in mm		
	Min.	Nom.	Max.	Min.	Nom.	Max.
A	-	-	0.063	-	-	1.60
A_1	0.002	-	0.006	0.05	-	0.15
A_2	0.053	0.055	0.057	1.35	1.40	1.45
b	0.005	0.007	0.009	0.13	0.18	0.23
c	0.004	-	0.008	0.09	-	0.20
D	0.354 BSC			9.00 BSC		
D_1	0.276 BSC			7.00 BSC		
E	0.354 BSC			9.00 BSC		
E_1	0.276 BSC			7.00 BSC		
e	0.016 BSC			0.40 BSC		
L	0.018	0.024	0.030	0.45	0.60	0.75
L_1	0.039 REF			1.00 REF		
y	-	-	0.004	-	-	0.10
θ	0°	3.5^o	7°	0°	3.5^o	7°

Notes:

1. Dimensions D_1 and E_1 do not include mold protrusion. But mold mismatch is included.
2. Dimensions b does not include dambar protrusion.
3. Controlling dimension: millimeter
4. Reference Document : JEDEC MS-026

DI-LQFP64(7.0*7.0)v0

CONFIDENTIAL

This page is intentionally left blank.

CONFIDENTIAL

13. Ordering Information

Part No.	Package
IT8772E	64-LQFP

All components provided are RoHS-compliant (100% Green Available).

CONFIDENTIAL

This page is intentionally left blank.

CONFIDENTIAL

14. Top Marking Information

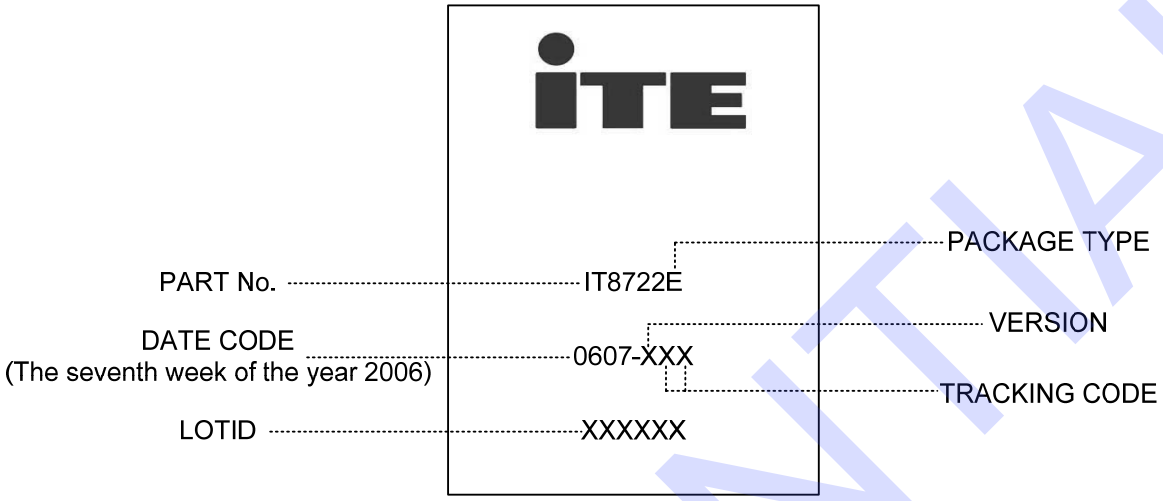

*PACKAGE TYPE :

E:	LQFP
F:	QFP
FN:	QFN
R:	SSOP

CONFIDENTIAL

ITE TECH. INC. TERMS AND CONDITIONS OF SALE (Rev: 2005)

0. PARTIES

ITE Tech. Inc. ("Seller") is a company headquartered in Taiwan, Republic of China, and incorporated under laws of Republic of China, Buyer is a company or an entity, purchasing product from ITE Tech. Inc..

1. ACCEPTANCE OF TERMS

BUYER ACCEPTS THESE TERMS (i) BY WRITTEN ACCEPTANCE (BY PURCHASE ORDER OR OTHERWISE), OR (ii) BY FAILURE TO RETURN GOODS DESCRIBED ON THE FACE OF THE PACKING LIST WITHIN FIVE DAYS OF THEIR DELIVERY.

2. DELIVERY

(a) Delivery will be made Free Carrier (Incoterms), Seller's warehouse, Science-Based Industrial Park, Hsinchu, Taiwan.

(b) Title to the goods and the entire risk will pass to Buyer upon delivery to carrier.

(c) Shipments are subject to availability. Seller shall make every reasonable effort to meet the date(s) quoted or acknowledged; and if Seller makes such effort, Seller will not be liable for any delays.

3. TERMS OF PAYMENT

(a) Terms are as stated on Seller's quotation, or if none are stated, net thirty (30) days. Accounts past due will incur a monthly charge at the rate of one percent (1%) per month (or, if less, the maximum allowed by applicable law) to cover servicing costs.

(b) Seller reserves the right to change credit terms at any time in its sole discretion.

4. LIMITED WARRANTY

(a) Seller warrants that the goods sold will be free from defects in material and workmanship and comply with Seller's applicable published specifications for a period of ninety (90) days from the date of Seller's delivery. Within the warranty period and by obtaining a return number from Seller, Buyer may request replacement or repair for defective goods.

(b) Goods or parts which have been subject to abuse (including without limitation repeated or extended exposure to conditions at or near the limits of applicable absolute ratings) misuse, accident, alteration, neglect, or unauthorized repair or improper application are not covered by any warranty. No warranty is made with respect to custom products or goods produced to Buyer's specifications (unless specifically stated in a writing signed by Seller).

(c) No warranty is made with respect to goods used in devices intended for use in applications where failure to perform when properly used can reasonably be expected to result in significant injury (including, without limitation, navigation, aviation or nuclear equipment, or for surgical implant or to support or sustain life) and Buyer agrees to indemnify, defend, and hold harmless Seller from all claims, damages and liabilities arising out of any such uses.

(d) This Paragraph 4 is the only warranty by Seller with respect to goods and may not be modified or amended except in writing signed by an authorized officer of Seller.

(e) Buyer acknowledges and agrees that it is not relying on any applications, diagrams or circuits contained in any literature, and Buyer will test all parts and applications under extended field and laboratory conditions. Notwithstanding any cross-reference or any statements of compatibility, functionality, interchangeability, and the like, the goods may differ from similar goods from other vendors in performance, function or operation, and in areas not contained in the written specifications, or as to ranges and conditions outside such specifications; and Buyer agrees that there are no warranties and that Seller is not responsible for such things.

(f) EXCEPT AS PROVIDED ABOVE, SELLER MAKES NO WARRANTIES OR CONDITIONS, EXPRESS, IMPLIED, OR STATUTORY; AND SELLER EXPRESSLY EXCLUDES AND DISCLAIMS ANY WARRANTY OR CONDITION OF MERCHANTABILITY OR FITNESS FOR PARTICULAR PURPOSE OR APPLICATION.

5. LIMITATION OF LIABILITY

(a) Seller will not be liable for any loss, damage or penalty resulting from causes beyond its reasonable control, including but not limited to delay by others, force majeure, acts of God, or labor conditions. In any such event, the date(s) for Seller's performance will be deemed extended for a period equal to any delay resulting.

(b) THE LIABILITY OF SELLER ARISING OUT OF THE CONTRACT OR ANY GOODS SOLD WILL BE LIMITED TO REFUND OF THE PURCHASE PRICE OR REPLACEMENT OF PURCHASED GOODS (RETURNED TO SELLER FREIGHT PRE-PAID) OR, WITH SELLER'S PRIOR WRITTEN CONSENT, REPAIR OF PURCHASED GOODS.

(c) Buyer will not return any goods without first obtaining a customer return order number.

(d) AS A SEPARATE LIMITATION, IN NO EVENT WILL SELLER BE LIABLE FOR COSTS OF SUBSTITUTE GOODS; FOR ANY SPECIAL, CONSEQUENTIAL, INCIDENTAL OR INDIRECT DAMAGES; OR LOSS OF USE, OPPORTUNITY, MARKET POTENTIAL, AND/OR PROFIT ON ANY THEORY (CONTRACT, TORT, FROM THIRD PARTY CLAIMS OR OTHERWISE). THESE LIMITATIONS SHALL APPLY NOTWITHSTANDING ANY FAILURE OF ESSENTIAL PURPOSE OF ANY REMEDY.

(e) No action against Seller, whether for breach, indemnification, contribution or otherwise, shall be commenced more than one year after the cause of action has accrued, or more than one year after either the Buyer, user or other person knew or with reasonable diligence should have known of the matter or of any claim of dissatisfaction or defect involved; and no such claim may be brought unless Seller has first been given commercially reasonable notice, a full written explanation of all pertinent details, and a good faith opportunity to resolve the matter.

(f) BUYER EXPRESSLY AGREES TO THE LIMITATIONS OF THIS PARAGRAPH 5 AND TO THEIR REASONABLENESS.

6. SUBSTITUTIONS AND MODIFICATIONS

Seller may at any time make substitutions for product ordered which do not materially and adversely affect overall performance with the then current specifications in the typical and intended use. Seller reserves the right to halt deliveries and shipments and alter specifications and prices without notice. Buyer shall verify that the literature and information is current before purchasing.

7. CANCELLATION

The purchase contract may not be canceled by Buyer except with written consent by Seller and Buyer's payment of reasonable cancellation charges (including but not be limited to expenses already incurred for labor and material, overhead, commitments made by Seller, and a reasonable profit).

8. INDEMNIFICATION

Seller will, at its own expense, assist Buyer with technical support and information in connection with any claim that any parts as shipped by Seller under the purchase order infringe any valid and enforceable copyright, or trademark, provided however, that Buyer (i) gives immediate written notice to Seller, (ii) permits Seller to participate and to defend if Seller requests to do so, and (iii) gives Seller all needed information, assistance and authority. However, Seller will not be responsible for infringements resulting from anything not entirely manufactured by Seller, or from any combination with products, equipment, or materials not furnished by Seller. Seller will have no liability with respect to intellectual property matters arising out of products made to Buyer's specifications, code, or designs.

Except as expressly stated in this Paragraph 8 or in another writing signed by an authorized officer, Seller makes no representations and/or warranties with respect to intellectual and/or industrial property and/or with respect to claims of infringement. Except as to claims Seller agrees in writing to defend, BUYER WILL INDEMNIFY, DEFEND AND HOLD HARMLESS SELLER FROM ALL CLAIMS, COSTS, LOSSES, AND DAMAGES (INCLUDING ATTORNEYS FEES) AGAINST AND/OR ARISING OUT OF GOODS SOLD AND/OR SHIPPED HEREUNDER.

9. NO CONFIDENTIAL INFORMATION

Seller shall have no obligation to hold any information in confidence except as provided in a separate non-disclosure agreement signed by both parties.

10. ENTIRE AGREEMENT

(a) These terms and conditions are the entire agreement and the only representations and understandings between Seller and Buyer, and no addition, deletion or modification shall be binding on Seller unless expressly agreed to in written and signed by an officer of Seller.

(b) Buyer is not relying upon any warranty or representation except for those specifically stated here.

11. APPLICABLE LAW

The contract and all performance and disputes arising out of or relating to goods involved will be governed by the laws of R.O.C. (Taiwan, Republic of China), without reference to the U.N. Convention on Contracts for the International Sale of Goods or to conflict of laws principles. Buyer agrees at its sole expense to comply with all applicable laws in connection with the purchase, use or sale of the goods provided hereunder and to indemnify Seller from any failure by Buyer to so comply. Without limiting the foregoing, Buyer certifies that no technical data or direct products thereof will be made available or re-exported, directly or indirectly, to any country to which such export or access is prohibited or restricted under R.O.C. laws or U.S. laws or regulations, unless prior authorization is obtained from the appropriate officials and agencies of the government as required under R.O.C. or U.S. laws or regulations.

12. JURISDICTION AND VENUE

The courts located in Hsinchu, Taiwan, Republic of China, will have the sole and exclusive jurisdiction and venue over any dispute arising out of or relating to the contract or any sale of goods hereunder. Buyer hereby consents to the jurisdiction of such courts.

13. ATTORNEYS' FEES

Reasonable attorneys' fees and costs will be awarded to the prevailing party in the event of litigation involving and/or relating to the enforcement or interpretation of the contract and/or any goods sold under it.

CONFIDENTIAL