ITE 聯陽半導體 ITE Tech. Inc.

IT8786E-I

Environment Control – Low Pin Count Input / Output (EC - LPC I/O)

Preliminary Specification V0.7.2

(For H Version)

ITE TECH. INC.

CONFIDENTIAL

This specification is subject to Change without notice. It is provided "AS IS" and for reference only. For purchasing information, please contact the nearest ITE TECH sales representatives.
Please note that the IT8786E-I V0.7.2 is applicable only to the H version.

CONFIDENTIAL

Copyright © 2019 ITE Tech. Inc.

This is a Preliminary document release. All specifications are subject to change without notice.
The material contained in this document supersedes all previous material issued for the products herein referenced. Please contact ITE Tech. Inc. for the latest document(s).

All sales are subject to ITE's Standard Terms and Conditions, a copy of which is included in the back of this document.

ITE, IT8786E-I is a trademark of ITE Tech. Inc.
All other trademarks are claimed by their respective owners.
All specifications are subject to change without notice.

Additional copies of this manual or other ITE literature may be obtained from:

ITE Tech. Inc.
Marketing Department
9F, No. 233-2, Baoqiao Rd., Xindian Dist,
New Taipei City, 23145, Taiwan, R.O.C.

Phone: (02) 29126889
Fax: (02) 2910-2551, 2910-2552

If you have any marketing or sales questions, please contact:
P.Y. Chang, at ITE Taiwan:
E-mail: p.y.chang@ite.com.tw, Tel: 886-2-29126889 X6052, Fax: 886-2-29102551

You may also find the local sales representative nearest you on the ITE web site.

To find out more about ITE, visit our World Wide Web at:
http://www.ite.com.tw

Or e-mail **itesupport@ite.com.tw** for more product information/services

CONFIDENTIAL

CONFIDENTIAL

Revision History

Section	Revision	Page No.
-	• Initial release for H version	-

CONFIDENTIAL

CONFIDENTIAL

CONTENTS

1. Features 1
2. General Description 3
3. Block Diagram 5
4. Pin Configuration 7
5. Pin Description 9
6. List of GPIO Pins 26
7. Power on Strapping Options and Special Pin Routings 33
8. Configuration 35
8.1 Configuring Sequence 35
8.2 Configuration Registers 37
8.2.2 Logical Device Base Address 43
8.3 Global Configuration Registers (LDN: All) 44
8.3.1 Configure Control (Index=02h) 44
8.3.2 Logical Device Number (LDN, Index=07h) 44
8.3.3 Chip ID Byte 1 (Index=20h, Default=87h) 44
8.3.4 Chip ID Byte 2 (Index=21h, Default=86h) 44
8.3.5 Chip Version (Index=22h, Default=07h) 44
8.3.6 Clock Selection Register (Index=23h, Default=40h) 44
8.3.7 EC MMIO (Index=24h, Default=00h) 45
8.3.8 GPIO Set 1 Multi-Function Pin Selection Register (Index=25h, Default=00h) 45
8.3.9 GPIO Set 2 Multi-Function Pin Selection Register (Index=26h, Default=F3h) 46
8.3.10 GPIO Set 3 Multi-Function Pin Selection Register (Index=27h, Default=00h) 46
8.3.11 GPIO Set 4 Multi-Function Pin Selection Register (Index=28h, Default=00h) 48
8.3.12 GPIO Set 5 Multi-Function Pin Selection Register (Index=29h, Default=00h) 49
8.3.13 Special Function Selection Register 1 (Index=2Ah, Default=00h) 49
8.3.14 Special Function Selection Register 2 (Index=2Bh, Default=48h) 50
8.3.15 Special Function Selection Register 3 (Index=2Ch, Default=89h) 50
8.3.16 Special Function Selection Register 4 (Index=2Dh, Default=00h) 50
8.3.17 Test 1 Register (Index=2Eh, Default=00h) 51
8.3.18 Test 2 Register (Index=2Fh, Default=00h) 51
8.4 Serial Port 1 Configuration Registers (LDN=01h) 52
8.4.1 Serial Port 1 Activate (Index=30h, Default=00h) 52
8.4.2 Serial Port 1 Base Address MSB Register (Index=60h, Default=03h) 52
8.4.3 Serial Port 1 Base Address LSB Register (Index=61h, Default=F8h) 52
8.4.4 Serial Port 1 Interrupt Level Select (Index=70h, Default=04h) 52
8.4.5 Serial Port 1 Special Configuration Register 1 (Index=F0h, Default=00h) 53
8.4.6 Serial Port 1 Interrupt Type Register (Index=F1h, Default=50h) 53
8.4.7 Serial Port 1 9-Bit Multi-Drops Slave Address Register (Index=F2h, Default=00h) 53
8.5 Serial Port 2 Configuration Registers (LDN=02h) 54
8.5.1 Serial Port 2 Activate (Index=30h, Default=00h) 54
8.5.2 Serial Port 2 Base Address MSB Register (Index=60h, Default=02h) 54
8.5.3 Serial Port 2 Base Address LSB Register (Index=61h, Default=F8h) 54
8.5.4 Serial Port 2 Interrupt Level Select (Index=70h, Default=03h) 54
8.5.5 Serial Port 2 Special Configuration Register 1 (Index=F0h, Default=00h) 54
8.5.6 Serial Port 2 Interrupt Type Register (Index=F1h, Default=50h) 55
8.5.7 Serial Port 2 9-Bit Multi-Drops Slave Address Register (Index=F2h, Default=00h) 55
8.6 Parallel Port Configuration Registers (LDN=03h) 56
8.6.1 Parallel Port Activate (Index=30h, Default=00h) 56
8.6.2 Parallel Port Primary Base Address MSB Register (Index=60h, Default=03h) 56
8.6.3 Parallel Port Primary Base Address LSB Register (Index=61h, Default=78h) 56

CONFIDENTIAL

8.6.4 Parallel Port Secondary Base Address MSB Register (Index=62h, Default=07h) 56
8.6.5 Parallel Port Secondary Base Address LSB Register (Index=63h, Default=78h) 56
8.6.6 Parallel Port Interrupt Level Select (Index =70h, Default=07h) 56
8.6.7 Parallel Port DMA Channel Select (Index=74h, Default=03h) 56
8.6.8 Parallel Port Special Configuration Register (Index=F0h, Default=0Bh) 57
8.7 Environment Controller Configuration Registers (LDN=04h) 58
8.7.1 Environment Controller Activate (Index=30h, Default=00h) 58
8.7.2 Environment Controller Base Address MSB Register (Index=60h, Default=02h) 58
8.7.3 Environment Controller Base Address LSB Register (Index=61h, Default=90h) 58
8.7.4 PME Direct Access Base Address MSB Register (Index=62h, Default=02h) 58
8.7.5 PME Direct Access Base Address LSB Register (Index=63h, Default=30h) 58
8.7.6 Environment Controller Interrupt Level Select (Index=70h, Default=09h) 58
8.7.7 APC/PME Event Enable Register (PER) (Index=F0h, Default=00h) 58
8.7.8 APC/PME Status Register (PSR) (Index=F1h, Default=00h) 59
8.7.9 APC/PME Control Register 1 (PCR 1) (Index=F2h, Default=00h) 59
8.7.10 Environment Controller Special Configuration Register (Index=F3h, Default=00h) 60
8.7.11 APC/PME Control Register 2 (PCR 2) (Index=F4h, Default=00h) 60
8.7.12 APC/PME Special Code Index Register (Index=F5h) 61
8.7.13 APC/PME Special Code Data Register (Index=F6h) 61
8.7.14 Special Configuration Register 1 (Index=FAh) 61
8.7.15 Special Configuration Register 2 (Index=FBh) 62
8.7.16 Special Configuration Register 3 (Index=FCh) 63
8.7.17 Special Configuration Register 4 (Index=FDh) 63
8.8 KBC(Keyboard) Configuration Registers (LDN=05h) 64
8.8.1 KBC(Keyboard) Activate (Index=30h, Default=01h) 64
8.8.2 KBC(Keyboard) Data Base Address MSB Register (Index=60h, Default=00h) 64
8.8.3 KBC(Keyboard) Data Base Address LSB Register (Index=61h, Default=60h) 64
8.8.4 KBC(Keyboard) Command Base Address MSB Register (Index=62h, Default=00h) 64
8.8.5 KBC(Keyboard) Command Base Address LSB Register (Index=63h, Default=64h) 64
8.8.6 KBC(Keyboard) Interrupt Level Select (Index=70h, Default=01h) 64
8.8.7 KBC(Keyboard) Interrupt Type (Index=71h, Default=02h) 64
8.8.8 KBC(Keyboard) Special Configuration Register (Index=F0h, Default=48h) 65
8.9 KBC(Mouse) Configuration Registers (LDN=06h) 66
8.9.1 KBC(Mouse) Activate (Index=30h, Default=00h) 66
8.9.2 KBC(Mouse) Interrupt Level Select (Index=70h, Default=0Ch) 66
8.9.3 KBC(Mouse) Interrupt Type (Index=71h, Default=02h) 66
8.9.4 KBC(Mouse) Special Configuration Register (Index=F0h, Default=00h) 66
8.10 GPIO Configuration Registers (LDN=07h) 67
8.10.1 SMI# Normal Run Access Base Address MSB Register (Index=60h, Default=00h) 67
8.10.2 SMI# Normal Run Access Base Address LSB Register (Index=61h, Default=00h) 67
8.10.3 Simple I/O Base Address MSB Register (Index=62h, Default=00h) 67
8.10.4 Simple I/O Base Address LSB Register (Index=63h, Default=00h) 67
8.10.5 Panel Button De-bounce Interrupt Level Select Register (Index=70h, Default=00h) 67
8.10.6 Watch Dog Timer Control Register (Index=71h, Default=00h) 67
8.10.7 Watch Dog Timer Configuration Register (Index=72h, Default=001s0000b) 68
8.10.8 Watch Dog Timer Time-out Value (LSB) Register (Index=73h, Default=38h) 68
8.10.9 Watch Dog Timer Time-out Value (MSB) Register (Index=74h, Default=00h) 68
8.10.10 GPIO Set 1-9 Registers (Index B0h~D9h) 69
Simple I/O Enable Registers 69
8.10.11 Panel Button De-bounce 0 Input Pin Mapping Register (Index=E0h, Default=00h) 69
8.10.12 Panel Button De-bounce 1 Input Pin Mapping Register (Index=E1h, Default=00h) 70
8.10.13 IRQ External Routing 1-0 Input Pin Mapping Registers (Index=E3h-E2h, Default=00h) 70

CONFIDENTIAL

8.10.14 IRQ External Routing 1-0 Interrupt Level Selection Registers (Index=E4h, Default=00h)...70
8.10.15 APOLLO LAKE/GEMINI LAKE Power Sequence Control Registers (Index=E7h, Default=00h) 70
8.10.16 SMI# Control Register 1 (Index=F0h, Default=00h) 70
8.10.17 SMI# Control Register 2 (Index=F1h, Default=00h) 71
8.10.18 SMI# Status Register 1 (Index=F2h, Default=00h)....71
8.10.19 SMI# Status Register 2 (Index=F3h, Default=00h)....71
8.10.20 SMI# Pin Mapping Register (Index=F4h, Default=00h)....72
8.10.21 Hardware Monitor Thermal Output Pin Mapping Register (Index=F5h, Default=00h) 72
8.10.22 Hardware Monitor Alert Beep Pin Mapping Register (Index=F6h, Default=00h) 73
8.10.23 Keyboard Lock Pin Mapping Register (Index=F7h, Default=00h)....73
8.10.24 GP LED Blinking 1 Pin Mapping Register (Index=F8h, Default=00h) 73
8.10.25 GP LED Blinking 1 Control Register (Index=F9h, Default=00h)....73
8.10.26 GP LED Blinking 2 Pin Mapping Register (Index=FAh, Default=00h) 73
8.10.27 GP LED Blinking 2 Control Register (Index=FBh, Default=00h) 74
8.11 Serial Port 3 Configuration Registers (LDN=08h)....75
8.11.1 Serial Port 3 Activate (Index=30h, Default=00h) 75
8.11.2 Serial Port 3 Base Address MSB Register (Index=60h, Default=03h)....75
8.11.3 Serial Port 3 Base Address LSB Register (Index=61h, Default=F8h)....75
8.11.4 Serial Port 3 Interrupt Level Select (Index=70h, Default=0Bh) 75
8.11.6 Serial Port 3 Special Configuration Register 1 (Index=F0h, Default=00h)....76
8.11.7 Serial Port 3 Interrupt Type Register (Index=F1h, Default=50h)....76
8.11.8 Serial Port 3 9-Bit Multi-Drops Slave Address Register (Index=F2h, Default=00h) 76
8.12 Serial Port 4 Configuration Registers (LDN=09h)....77
8.12.1 Serial Port 4 Activate (Index=30h, Default=00h) 77
8.12.2 Serial Port 4 Base Address MSB Register (Index=60h, Default=02h)....77
8.12.3 Serial Port 4 Base Address LSB Register (Index=61h, Default=F8h)....77
8.12.4 Serial Port 4 Interrupt Level Select (Index=70h, Default=0Ah) 77
8.12.5 Serial Port 4 Special Configuration Register 1 (Index=F0h, Default=00h)....77
8.12.6 Serial Port 4 Interrupt Type Register (Index=F1h, Default=50h)....78
8.12.7 Serial Port 4 9-Bit Multi-Drops Slave Address Register (Index=F2h, Default=00h) 78
8.13 Consumer IR Configuration Registers (LDN=0Ah) 79
8.13.1 Consumer IR Activate (Index=30h, Default=00h)....79
8.13.2 Consumer IR Base Address MSB Register (Index=60h, Default=03h) 79
8.13.3 Consumer IR Base Address LSB Register (Index=61h, Default=10h) 79
8.13.4 Consumer IR Interrupt Level Select (Index=70h, Default=0Bh) 79
8.13.5 Consumer IR Special Configuration Register (Index=F0h, Default=06h) 79
8.14 Serial Port 5 Configuration Registers (LDN=0Bh) 80
8.14.1 Serial Port 5 Activate (Index=30h, Default=00h) 80
8.14.2 Serial Port 5 Base Address MSB Register (Index=60h, Default=03h)....80
8.14.3 Serial Port 5 Base Address LSB Register (Index=61h, Default=F8h)....80
8.14.4 Serial Port 5 Interrupt Level Select (Index=70h, Default=04h)....80
8.14.5 Serial Port 5 Special Configuration Register 1 (Index=F0h, Default=00h)....80
8.14.6 Serial Port 5 Interrupt Type Register (Index=F1h, Default=50h)....81
8.14.7 Serial Port 5 9-Bit Multi-Drops Slave Address Register (Index=F2h, Default=00h) 81
8.15 Serial Port 6 Configuration Registers (LDN=0Ch) 82
8.15.1 Serial Port 6 Activate (Index=30h, Default=00h) 82
8.15.2 Serial Port 6 Base Address MSB Register (Index=60h, Default=02h)....82
8.15.3 Serial Port 6 Base Address LSB Register (Index=61h, Default=F8h)....82
8.15.4 Serial Port 6 Interrupt Level Select (Index=70h, Default=03h)....82
8.15.5 Serial Port 6 Special Configuration Register 1 (Index=F0h, Default=00h)....82
8.15.6 Serial Port 6 Interrupt Type Register (Index=F1h, Default=50h)....83
8.15.7 Serial Port 6 9-Bit Multi-Drops Slave Address Register (Index=F2h, Default=00h) 83
9. Functional Description....85

CONFIDENTIAL

9.1 Clock 85
9.2 LPC Interface 85
9.2.1 LPC Transactions 85
9.2.2 LDRQ# Encoding 85
9.3 The Enhanced Serial Peripheral Interface (eSPI) 86
9.3.1 Overview 86
9.3.2 Features 86
9.4 Serialized IRQ 89
9.4.1 Continuous Mode 89
9.4.2 Quiet Mode 89
9.4.3 Waveform Samples of SERIRQ Sequence 89
9.4.4 SERIRQ Sampling Slot 89
9.5 General Purpose I/O 91
9.6 Advanced Power Supply Control and Power Management Event (PME#) 93
9.7 Environment Controller 94
9.7.1 Interface 94
9.7.2 Registers 94
9.7.2.1 Address Port (Base+05h, Default=00h) 94
9.7.2.2 Register Description 99
9.7.2.2.1 Configuration Register (Index=00h, Default=18h) 99
9.7.2.2.2 Interrupt Status Register 1 (Index=01h, Default=00h) 100
9.7.2.2.3 Interrupt Status Register 2 (Index=02h, Default=00h) 100
9.7.2.2.4 Interrupt Status Register 3 (Index=03h, Default=00h) 100
9.7.2.2.5 SMI# Mask Register 1 (Index=04h, Default=00h) 100
9.7.2.2.6 SMI# Mask Register 2 (Index=05h, Default=00h) 100
9.7.2.2.7 SMI# Mask Register 3 (Index=06h, Default=00h) 100
9.7.2.2.8 Interrupt Mask Register 1 (Index=07h, Default=00h) 101
9.7.2.2.9 Interrupt Mask Register 2 (Index=08h, Default=00h) 101
9.7.2.2.10 Interrupt Mask Register 3 (Index=09h, Default=C0h) 101
9.7.2.2.11 Interface Selection Register (Index=0Ah, Default=04h) 101
9.7.2.2.12 Fan PWM Smoothing Step Frequency Selection Register (Index=0Bh, Default=0Fh) 102
9.7.2.2.13 Fan Tachometer Control Register (Index=0Ch, Default=00h) 102
9.7.2.2.14 Fan Tachometer 1-3 Reading Registers (Index=0Dh-0Fh) 102
9.7.2.2.15 Fan Tachometer 1-3 Limit Registers (Index=10h-12h) 103
9.7.2.2.16 Fan Controller Main Control Register (Index=13h, Default=07h) 103
9.7.2.2.17 FAN_CTL Control Register (Index=14h, Default=40h) 103
9.7.2.2.18 FAN_CTL 1-3 PWM Control Register (Index=15h,16h,17h, Default=00h) 104
9.7.2.2.19 Fan Tachometer 1-3 Extended Reading Registers (Index=18h-1Ah) 104
9.7.2.2.20 Fan Tachometer 1-3 Extended Limit Registers (Index=1Bh-1Dh) 104
9.7.2.2.21 VIN4-0 Voltage Reading Registers (Index=24h-20h) 104
9.7.2.2.22 3VSB Voltage Reading Registers (Index=27h) 104
9.7.2.2.23 VBAT Voltage Reading Register (Index=28h) 104
9.7.2.2.24 TMPIN3-1 Temperature Reading Registers (Index=2Bh-29h) 105
9.7.2.2.25 3VSB, VIN4-0 High Limit Registers (Index=3Eh, 38h, 36h, 34h, 32h, 30h) 105
9.7.2.2.26 3VSB, VIN4-0 Low Limit Registers (Index=3Fh, 39h, 37h, 35h, 33h, 31h) 105
9.7.2.2.27 TMPIN3-1 High Limit Registers (Index=44h, 42h, 40h) 105

CONFIDENTIAL

9.7.2.2.28 TMPIN3-1 Low Limit Registers (Index=45h, 43h, 41h) 105
9.7.2.2.29 ADC Voltage Channel Enable Register (Index=50h, Default=00h) 105
9.7.2.2.30 ADC Temperature Channel Enable Register (Index=51h, Default=00h) 105
9.7.2.2.31 TMPIN3-1 Thermal Output Limit Registers (Index=54h-52h, Default=7Fh) 105
9.7.2.2.32 ADC Temperature Extra Channel Enable Register (Index=55h, Default=40h) 106
9.7.2.2.33 Thermal Diode Zero Degree Adjust 3-1 Registers (Index=59h, 57h, 56h, Default=00h) 106
9.7.2.2.34 Vendor ID Register (Index=58h, Default=90h) 106
9.7.2.2.35 Code ID Register (Index=5Bh, Default=12h) 106
9.7.2.2.36 Beep Event Enable Register (Index=5Ch, Default=60h) 106
9.7.2.2.37 Beep Frequency Divisor of Fan Event Register (Index=5Dh, Default=00h) 107
9.7.2.2.38 Beep Frequency Divisor of Voltage Event Register (Index=5Eh, Default=00h) 107
9.7.2.2.39 Beep Frequency Divisor of Temperature Event Register (Index=5Fh, Default=00h) 107
9.7.2.2.40 FAN_CTL3-1 SmartGuardian Automatic Mode Temperature Limit of OFF Registers (Index=70h, 68h, 60h, Default=7Fh) 107
9.7.2.2.41 FAN_CTL3-1 SmartGuardian Automatic Mode Temperature Limit of Fan Start Registers (Index=71h, 69h, 61h, Default=7Fh) 107
9.7.2.2.42 FAN_CTL3-1 SmartGuardian Automatic Mode Temperature Limit of Full Speed Registers (Index=72h, 6Ah, 62h, Default=7Fh) 107
9.7.2.2.43 FAN_CTL3-1 SmartGuardian Automatic Mode Start PWM Registers 108
9.7.2.2.44 FAN_CTL3-1 SmartGuardian Automatic Mode Control Registers 108
9.7.2.2.45 FAN_CTL3-1 SmartGuardian Automatic Mode △-Temperature Registers 109
9.7.2.2.46 FAN_CTL3-1 Target Zone Registers (Index=76h, 6Eh, 66h, Default=0Fh) 109
9.7.2.2.47 Fan Tachometer 4-5 Reading LSB Registers (Index=80h,82h) 109
9.7.2.2.48 Fan Tachometer 4-5 Reading MSB Registers (Index=81h,83h) 109
9.7.2.2.49 Fan Tachometer 4-5 Limit LSB Registers (Index=84h,86h) 109
9.7.2.2.50 Fan Tachometer 4-5 Limit MSB Registers (Index=85h,87h) 109
9.7.2.2.51 External Temperature Sensor Host Status Register (Index=88h, Default= -00h) 109
9.7.2.2.52 External Temperature Sensor Host Target Address Register (Index=89h, Default=00h) 110
9.7.2.2.53 External Temperature Sensor Host Write Length Register (Index=8Ah, Default=00h) 110
9.7.2.2.54 External Temperature Sensor Host Read Length Register (Index=8Bh, Default=00h) 110
9.7.2.2.55 External Temperature Sensor Host Command (Write Data 1) Register 111
9.7.2.2.56 External Temperature Sensor Write Data (2-8) Register (Index=8Dh, Default=--h) 111
9.7.2.2.57 External Temperature Sensor Host Control Register (Index=8Eh, Default=00h) 111
9.7.2.2.58 External Temperature Sensor Read Data (1-16) Register (Index=8Fh, Default=--h) 111

CONFIDENTIAL

9.7.2.2.59 Special FAN Control Mode Extra Vector A, B Temperature Limit of Fan Start Registers (Index=90h, 94h, Default=FFh) 112
9.7.2.2.60 Special FAN Control Mode Extra Vector A, B Slope Registers (Index=91h, 95h, Default=00h) 112
9.7.2.2.61 Special FAN Control Mode Extra Vector A, B △-Temperature Registers (Index=92h, 96h, Default=00h) 112
9.7.2.2.62 Special FAN Control Mode Extra Vector A, B Range Registers (Index=93h, 97h, Default=00h) 112
9.7.2.2.63 PCH/SB-TSI Host Status Register (Index=98h, Default=---00000b) 113
9.7.2.2.64 PCH/SB-TSI Host Target Address Register (Index=99h, Default=00h) 113
9.7.2.2.65 PCH/SB-TSI Host Command Register (Index=9Ch, Default=00h) 113
9.7.2.2.66 PCH/SB-TSI Write Data Register (Index=9Dh, Default=--h) 114
9.7.2.2.67 PCH/SB-TSI Host Control Register (Index=9Eh, Default=00h) . 114
9.7.2.2.68 PCH/SB-TSI Read Data (1-16) Register (Index=9Fh, Default=--h) 115
9.7.2.2.69 OOB Control Register (Index=C0h, Default=00h) 116
9.7.2.2.70 Get OOB Length Register (Index=C1h, Default=00h) 116
9.7.2.2.71 Put OOB Length Register (Index=C2h) 116
9.7.2.2.72 Get OOB Data Register (Index=C3h) 116
9.7.2.2.73 PUT OOB Data Register (Index=C4h) 116
9.7.3 Operation 117
9.7.3.1 Power on Reset and Software Reset 117
9.7.3.2 Starting Conversion 117
9.7.3.3 Voltage and Temperature Inputs 118
9.7.3.4 Layout and Grounding 118
9.7.3.5 Fan Tachometer 119
9.7.3.6 Interrupt of the EC 119
9.7.3.7 FAN Controller FAN_CTL's ON-OFF and SmartGuardian Modes 120
9.7.3.8 External Thermal Sensor Programming Procedure 122
9.8 Serial Port (UART) 127
9.8.1 Data Register 127
9.8.1.1 Receiver Buffer Register (RBR) (Read only, Address offset=0, DLAB=0) 127
9.8.1.2 Transmitter Buffer Register (TBR) (Write only, Address offset=0, DLAB=0) 127
9.8.2 Control Register 128
9.8.2.1 Interrupt Enable Register (IER) (Read/Write, Address offset=1, DLAB=0) 128
9.8.2.2 Interrupt Identification Register (IIR) (Read only, Address offset=2) 128
9.8.2.3 FIFO Control Register (FCR) (Write Only, Address offset=2) 130
9.8.2.4 Divisor Latches (DLL, DLM) (Read/Write, Address offset=0,1 DLAB=0) 130
9.8.2.5 Baud Rate Generator (BRG) 130
9.8.2.6 Scratch Pad Register (Read/Write, Address offset=7) 131
9.8.2.7 Line Control Register (LCR) (Read/Write, Address offset=3) 132
9.8.2.8 Modem Control Register (MCR) (Read/Write, Address offset=4) 133
9.8.3 Status Registers 134
9.8.3.1 Line Status Register (LSR) (Read/Write, Address offset=5) 134
9.8.3.2 Modem Status Register (MSR) (Read/Write, Address offset=6) 135
9.8.4 Reset 136
9.8.5 Programming 136
9.8.6 Software Reset 136
9.8.7 Clock Input Operation 136

CONFIDENTIAL

9.8.8 FIFO Interrupt Mode Operation 136
9.9 Parallel Port 139
9.9.1 SPP and EPP Mode 139
9.9.1.1 Data Port Register (Base Address 1 + 00h) 140
9.9.1.2 Status Port Register (Base Address 1 + 01h) 140
9.9.1.3 Control Port Register (Base Address 1 + 02h) 140
9.9.1.4 EPP Address Port Register (Base Address 1 + 03h) 141
9.9.1.5 EPP Data Port 0-3 Register (Base Address 1 + 04-07h) 141
9.9.2 EPP Mode Operation 141
9.9.2.1 EPP ADDRESS WRITE 141
9.9.2.2 EPP ADDRESS READ 141
9.9.2.3 EPP DATA WRITE 142
9.9.2.4 EPP DATA READ 142
9.9.3 ECP Mode Operation 142
9.9.3.1 ECP Register Definition 143
9.9.3.2 ECP Mode Description 143
9.9.3.3 ECP Pin Description 144
9.9.3.4 Data Port (Base 1+00h, Modes 000 and 001) 144
9.9.3.5 ecpAFifo Port (Address/RLE) (Base 1 +00h, Mode 011) 144
9.9.3.6 Device Status Register (dsr) (Base 1 +01h, Mode All) 144
9.9.3.7 Device Control Register (dcr) (Base 1+02h, Mode All) 145
9.9.3.8 Parallel Port Data FIFO (cFifo) (Base 2+00h, Mode 010) 145
9.9.3.9 ECP Data FIFO (ecpDFifo) (Base 2+00h, Mode 011) 145
9.9.3.10 Test FIFO (tFifo) (Base 2+00h, Mode 110) 145
9.9.3.11 Configuration Register A (cnfgA) (Base 2+00h, Mode 111) 145
9.9.3.12 Configuration Register B (cnfgB) (Base 2+01h, Mode 111) 145
9.9.3.13 Extended Control Register (ecr) (Base 2+02h, Mode All) 146
9.9.3.14 Mode Switching Operation 147
9.9.3.15 Software Operation (ECP) 147
9.9.3.16 Hardware Operation (DMA) 147
9.9.3.17 Interrupt 148
9.9.3.18 Interrupt-driven Programmed I/O 148
9.9.3.19 Standard Parallel Port 148
9.10 Keyboard Controller (KBC) 149
9.10.1 Host Interface 149
9.10.2 Data Registers and Status Register 150
9.10.3 Keyboard and Mouse Interface 150
9.10.4 KIRQ and MIRQ 150
9.11 Consumer Remote Control (TV Remote) IR (CIR) 151
9.11.1 Overview 151
9.11.2 Features 151
9.11.3 Block Diagram 151
9.11.4 Transmit Operation 152
9.11.5 Receive Operation 152
9.11.6 Register Description and Address 152
9.11.6.1 CIR Data Register (DR) 153
9.11.6.2 CIR Interrupt Enable Register (IER) 153
9.11.6.3 CIR Receiver Control Register (RCR) 154
9.11.6.4 CIR Transmitter Control Register 1 (TCR1) 155
9.11.6.5 CIR Transmitter Control Register (TCR2) 156
9.11.6.6 CIR Transmitter Status Register (TSR) 159
9.11.6.7 CIR Receiver FIFO Status Register (RSR) 159
9.11.6.8 CIR Baud Rate Divisor Low Byte Register (BDLR) 159
9.11.6.9 CIR Baud Rate Divisor High Byte Register (BDHR) 160

CONFIDENTIAL

9.11.6.10 CIR Interrupt Identification Register (IIR) 160
10. DC Electrical Characteristics 161
11. AC Characteristics 165
11.1 CLK (PCICLK) and LRESET Timings 165
11.2 LPC and SERIRQ Timings 166
11.3 Modem Control Timings 167
11.4 EPP Address or Data Write Cycle Timings 168
11.5 Keyboard/Mouse Receive/Send Data Timings 169
11.6 EPP Address or Data Read Cycle Timings 170
11.7 ECP Parallel Port Forward Timings 171
11.8 ECP Parallel Port Backward Timings 172
11.9 RSMRST# and ACPI Power Control Signal Timings 173
11.10 PWRGD2, PWRGD3 Signal Timings 174
11.11 Energy-using Product (EuP) Power Control Signal Timings 176
11.12 APL/GLK Forced Shutdown Timing 177
11.13 S0ix Sequence Timing 178
12. Package Information 179
13. Ordering Information 181
14. Top Marking Information 183

FIGURES

Figure 4-1. IT8786E-I 128-LQFP Top View 7
Figure 7-1. IT8786E-I EUP Applications Circuitry for Intel ICH 34
Figure 9-1 Scheme of Platform Reset 88
Figure 9-2. Start Frame Timing 89
Figure 9-3. Stop Frame Timing 89
Figure 9-4. General Logic of GPIO Function 92
Figure 9-5. Application Example 117
Figure 9-6. Temperature Interrupt Response Diagram 120
Figure 9-7. SmartGuardian Automatic Mode 121
Figure 9-8. PECI Programming Procedure 122
Figure 9-9. PECI Host Programming Procedure 123
Figure 9-10. SMBUS Host Programming Procedure 124
Figure 9-11. SB-TSI Host Programming Procedure 125
Figure 9-12. PCH SM-Link Programming Procedure 126
Figure 9-13. Keyboard and Mouse Interface 149
Figure 9-14. CIR Block Diagram 151
Figure 11-1. LCLK (PCICLK) and LRESET Timings 165
Figure 11-2. LPC and SERIRQ Timings 166
Figure 11-3. Modem Control Timings 167
Figure 11-4. EPP Address or Data Write Cycle Timings 168
Figure 11-5. Keyboard/Mouse Receive/Send Data Timings 169
Figure 11-6. EPP Address or Data Read Cycle Timings 170
Figure 11-7. ECP Parallel Port Forward Timings 171
Figure 11-8. ECP Parallel Port Backward Timings 172

CONFIDENTIAL

Figure 11-9. RSMRST# Timings 173
Figure 11-10. PWRGD3 Timings 173
Figure 11-11. ACPI Power Signal Timings 173
Figure 11-12. PWRGD2/3 Signal Condition 174
Figure 11-13. PWRGD2/3 Signal Timings 175
Figure 11-14. PCIRST#1 Signal Timings 175
Figure 11-15. EuP Function Signal Timings 176
Figure 11-16. APL/GLK Forced Shutdown Timing 177
Figure 11-17. S0ix Sequence Timing 178

TABLES

Table 4-1. Pins Listed in Numeric Order 8
Table 5-1. Pin Description of Supplies Signals 9
Table 5-2. Pin Description of LPC Bus Interface Signals 9
Table 5-3 Pin Description of eSPI Bus Interface Signals 10
Table 5-4. Pin Description of Hardware Monitor Signals 10
Table 5-5. Pin Description of Fan Controller Signals 11
Table 5-6. Pin Description of Infrared Port Signals 12
Table 5-7. Pin Description of Serial Port 1 Signals 12
Table 5-8. Pin Description of Serial Port 2 Signals 14
Table 5-9. Pin Description of Serial Port 3 Signals 15
Table 5-10. Pin Description of Serial Port 4 Signals 16
Table 5-11. Pin Description of Serial Port 5 Signals 18
Table 5-12. Pin Description of Serial Port 6 Signals 19
Table 5-13. Pin Description of Parallel Port Signals 20
Table 5-14. Pin Description of Keyboard Controller Signals 22
Table 5-15. Pin Description of Miscellaneous Signals 23
Table 6-1. GPIO Alternate Function 26
Table 6-2. GPIO Registers and Power Pads Table 31
Table 7-1. Power On Strapping Options 33
Table 8-1. Global Configuration Registers 37
Table 8-2. Serial Port 1 Configuration Registers 37
Table 8-3. Serial Port 2 Configuration Registers 38
Table 8-4. Parallel Port Configuration Registers 38
Table 8-5. Environment Controller Configuration Registers 38
Table 8-6. KBC(Keyboard) Configuration Registers 39
Table 8-7. KBC(Mouse) Configuration Registers 39
Table 8-8. GPIO Configuration Registers 39
Table 8-9. Serial Port 3 Configuration Registers 41
Table 8-10. Serial Port 4 Configuration Registers 41
Table 8-11. Consumer IR Configuration Registers 42
Table 8-12. Serial Port 5 Configuration Registers 42
Table 8-13. Serial Port 6 Configuration Registers 42
Table 8-14. Base Address of Logical Devices 43
Table 8-15. Interrupt Level Mapping Table 83

CONFIDENTIAL

Table 8-16. DMA Channel Mapping Table 83
Table 8-17 Location Mapping Table 84
Table 9-1. Address Map on LPC Bus 94
Table 9-2. Environment Controller Registers 95
Table 9-3. Serial Channel Registers 127
Table 9-4. Interrupt Identification Register 129
Table 9-5. Receiver FIFO Trigger Level Encoding 130
Table 9-6. Baud Rate Using (24 MHz ÷ 13) Clock 131
Table 9-7. Stop Bit Number Encoding 132
Table 9-8. Reset Control of Register and Pinout Signal 136
Table 9-9. Parallel Port Connector in Different Modes 139
Table 9-10. Address Map and Bit Map for SPP and EPP Mode 139
Table 9-11. Bit Map of ECP Register 142
Table 9-12. Mode and Description of Extended Control Register (ECR) 146
Table 9-13. Data Register READ/WRITE Controls 149
Table 9-14. Status Register 150
Table 9-15. CIR Register 152
Table 9-16. Modulation Carrier Frequency 157
Table 9-17. Receiver Demodulation Low Frequency (HCFS = 0) 158
Table 9-18. Receiver Demodulation High Frequency (HCFS = 1) 159

CONFIDENTIAL

1. Features

- **Low Pin Count Interface**
  - Complies with Intel Low Pin Count Interface Specification Rev. 1.1
  - Supports LDRQ#, SERIRQ protocols
  - Supports PCI PME# Interfaces
  - Supports CLKRUN#
  - Supports 3.3V/1.8V level

- **eSPI Interface**
  - Compatible with eSPI specification v1.0
  - Supports PUT_IOWR_SHORT, PUT_IORD_SHORT commands
  - Supports OOB temperature
  - Supports VW IRQ/System event
  - Supports eSPI 20MHz to 60MHz

- **ACPI & LANDesk Compliant**
  - ACPI v2.0 compliant
  - Register sets compatible with "Plug and Play ISA Specification v1.0a"
  - Supports 10 logical devices

- **Enhanced Hardware Monitor**
  - Built-in 8-bit Analog to Digital Converter
  - 3 thermal inputs from either remote thermal resistor or thermal diode or diode-connected transistor, the temperature sensor of the current mode
  - 5 voltage monitor inputs (3VSB and VBAT measured internally)
  - 1 chassis open detection input with low power Flip-Flop dual-powered by battery or 3VSB
  - Watch Dog comparison of all monitored values
  - PECI/SB-TSI/PCH SM-Link I/F supporting external temperature reading for fan control

- **Fan Speed Controller**
  - Provides fan on-off and PWM control
  - Supports 5 programmable Pulse Width Modulation (PWM) outputs
  - 256 steps of PWM mode
  - Monitors 5 fan tachometer inputs
  - Provides fan close-loop control

- **Consumer Remote Control (TV remote) IR with Power-up Feature**
  - Supports two CIR RX ports

- **SmartGuardian Controller**
  - Provides programmably automatic fan speed control
  - Supports mix-and-match for temperature inputs and fan speed control outputs
  - Overrides fan speed controller during catastrophic situations
  - Provides audible over temperature warning

- **Six 16C550 UARTs**
  - Supports six standard Serial Ports
  - Supports RS485 automatic direction control
  - Supports 128 Bytes RX FIFOs.
  - Supports 9-bit multi-drops function
  - Supports UART port80

- **IEEE 1284 Parallel Port**
  - Standard mode -- Bi-directional SPP compliant
  - Enhanced mode -- EPP v1.7 and v1.9 compliant
  - High-speed mode -- ECP, IEEE 1284 compliant
  - Back-drive current reduction
  - Printer power-on damage reduction
  - Supports POST (Power-On Self Test) data port

- **Keyboard Controller**
  - 8042 compatible with PS/2 keyboard and mouse
  - Hardware KBC
  - GateA20 and Keyboard reset output
  - Supports Multiple keyboard power-on events (Any Keys, 2-5 Sequential Keys, 1-3 simultaneous Keys)
  - Supports mouse double-click and/or mouse move power on events

- **78 General Purpose I/O Pins**
  - Input mode supports either switch de-bounce or programmable external IRQ input routing
  - Output mode supports 2 sets of programmable LED blinking periods

- **Watch Dog Timer**
  - Time resolution 1 minute or 1 second, maximum 65535 minutes or 65535 seconds
  - Output to KRST# and PWRGD when expired

- **ITE's Innovative Automatic Power-failure Resume and Power Button De-bounce**

- **Eco-design of Energy-using Product (EuP), Extra Low Power S5 Control**

- **Built-in 32.768 kHz Oscillator**

CONFIDENTIAL

- **3VSB and VBAT Supported**
- **Hardware Reset Strapping for Enter-Key**
  - 2E/2F and 4E/4F
- **+3.3V Power Supply**
- **Case Open Detection**
- **Automatic PWRON#**
- **128-Pin LQFP**
- **RoHS Compliant (100% Green Available)**

CONFIDENTIAL

2. General Description

The IT8786E-I is a highly integrated Super I/O using the Low Pin Count interface or eSPI interface. It provides the most commonly used legacy Super I/O functionality plus the latest Environment Control initiatives, including H/W Monitor and Fan Speed Controller. The device's LPC and eSPI interfaces comply with Intel "LPC Interface Specification Rev. 1.1" and "eSPI specification V 1.0".

The IT8786E-I features an enhanced hardware monitor providing three thermal inputs from remote thermal resistors, or thermal diode or diode-connected transistor (2N3904/2N3906). The device employs ITE's innovative intelligent automatic Fan ON/OFF & speed control functions (SmartGuardian) to protect the system while reducing the system noise and power consumption. The Fan Speed Controller can control up to five fan speeds through five separate 256 steps of Pulse Width Modulation (PWM) output pins and monitor up to five FANs' Tachometer inputs.

In addition, it features six 16C550 standard compatible enhanced UARTs performing asynchronous communication, one multi-mode high-performance parallel port supporting bi-directional Standard Parallel Port (SPP), Enhanced Parallel Port (EPP V. 1.7 and EPP V. 1.9), and IEEE 1284 compliant Extended Capabilities Port (ECP)t, one integrated Keyboard Controller, ten GPIO ports controlling up to 78 GPIO pins, which can be individually enabled or disabled via software configuration registers, and IR interface supported.

Regarding eco-design of Energy-using Product (EuP), IT8786E-I provides not only a solution to reducing power consumption in S5 State but also Keyboard, Mouse, RI# and CIR wakeup events in S3/S5 State.

The IT8786E-I utilizes power-saving circuitry to reduce power consumption, and once a logical device is disabled, the inputs are inhibited with the clock disabled and the outputs are tri-stated. The device operates with +3.3V power supply. The IT8786E-I is available in 128-pin LQFP.

CONFIDENTIAL

This page is intentionally left blank.

CONFIDENTIAL

3. Block Diagram

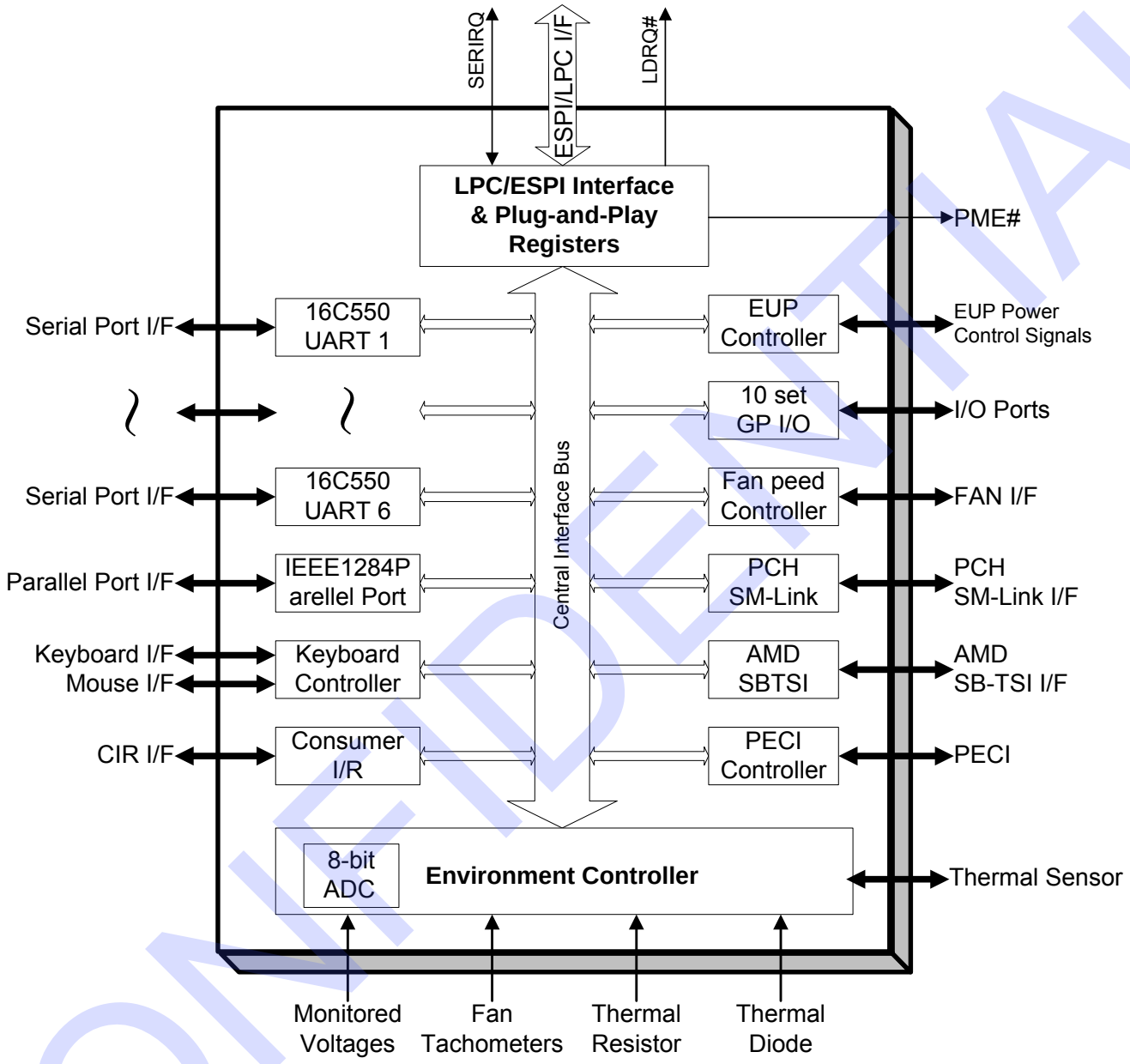

CONFIDENTIAL

This page is intentionally left blank.

CONFIDENTIAL

4. Pin Configuration

Figure 4-1. IT8786E-I 128-LQFP Top View

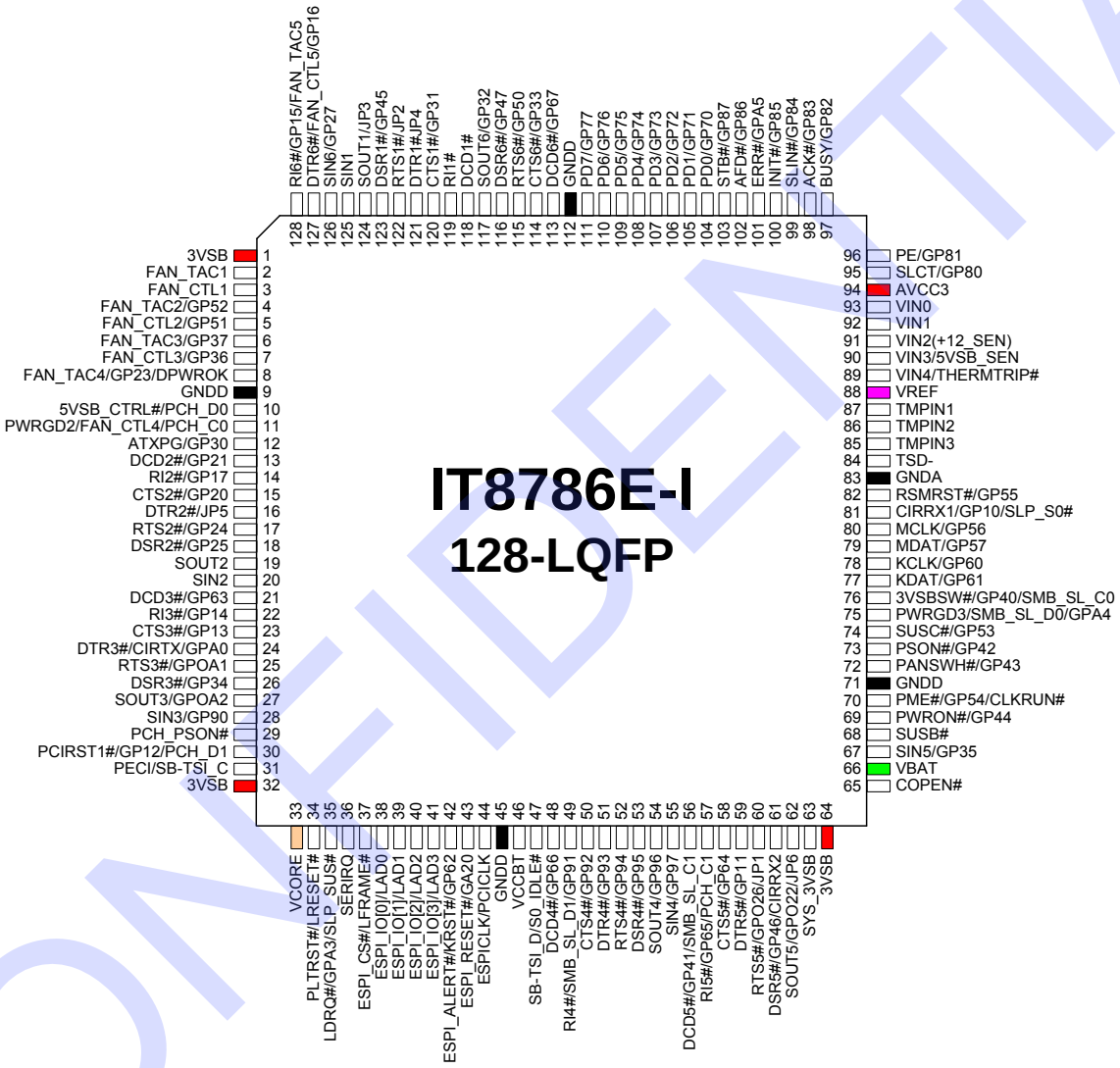

CONFIDENTIAL

Table 4-1. Pins Listed in Numeric Order

Pin	Signal	Pin	Signal	Pin	Signal	Pin	Signal
1	3VSB	33	VCORE	65	COPEN#	97	BUSY/GP82
2	FAN_TAC1	34	PLTRST#/LRESET#	66	VBAT	98	ACK#/GP83
3	FAN_CTL1	35	LDRQ#/GPA3 /SLP_SUS#	67	SIN5/GP35	99	SLIN#/GP84
4	FAN_TAC2/GP52	36	SERIRQ	68	SUSB#	100	INIT#/GP85
5	FAN_CTL2/GP51	37	ESPI_CS#/ LFRAME#	69	PWRON#/GP44	101	ERR#/GPA5
6	FAN_TAC3/GP37	38	ESPI_IO[0]/LAD0	70	PME#/GP54 /CLKRUN#	102	AFD#/GP86
7	FAN_CTL3/GP36	39	ESPI_IO[1]/LAD1	71	GNDD	103	STB#/GP87
8	FAN_TAC4/GP23 /DPWROK	40	ESPI_IO[2]/LAD2	72	PANSWH#/GP43	104	PD0/GP70
9	GNDD	41	ESPI_IO[3]/LAD3	73	PSON#/GP42	105	PD1/GP71
10	5VSB_CTRL#/ PCH_D0	42	ESPI_ALERT#/ KRST#/GP62	74	SUSC#/GP53	106	PD2/GP72
11	PWRGD2/FAN_CTL 4/PCH_C0	43	ESPI_RESET#/ GA20	75	PWRGD3/ SMB_SL_D0/GPA4	107	PD3/GP73
12	ATXPG/GP30	44	ESPICLK/PCICLK	76	3VSBSW#/GP40/ SMB_SL_C0	108	PD4/GP74
13	DCD2#/GP21	45	GNDD	77	KDAT/GP61	109	PD5/GP75
14	RI2#/GP17	46	VCCBT	78	KCLK/GP60	110	PD6/GP76
15	CTS2#/GP20	47	SB-TSI_D/S0_IDLE#	79	MDAT/GP57	111	PD7/GP77
16	DTR2#/JP5	48	DCD4#/GP66	80	MCLK/GP56	112	GNDD
17	RTS2#/GP24	49	RI4#/SMB_SL_D1/ GP91	81	CIRRX1/GP10 /SLP_S0#	113	DCD6#/GP67
18	DSR2#/GP25	50	CTS4#/GP92	82	RSMRST#/GP55	114	CTS6#/GP33
19	SOUT2	51	DTR4#/GP93	83	GNDA	115	RTS6#/GP50
20	SIN2	52	RTS4#/GP94	84	TSD-	116	DSR6#/GP47
21	DCD3#/GP63	53	DSR4#/GP95	85	TMPIN3	117	SOUT6/GP32
22	RI3#/GP14	54	SOUT4/GP96	86	TMPIN2	118	DCD1#
23	CTS3#/GP13	55	SIN4/GP97	87	TMPIN1	119	RI1#
24	DTR3#/CIRTX/ GPA0	56	DCD5#/GP41/ SMB_SL_C1	88	VREF	120	CTS1#/GP31
25	RTS3#/GPOA1	57	RI5#/GP65/PCH_C1	89	VIN4/THERMTRIP#	121	DTR1#/JP4
26	DSR3#/GP34	58	CTS5#/GP64	90	VIN3/5VSB_SEN	122	RTS1#/JP2
27	SOUT3/GPOA2	59	DTR5#/GP11	91	VIN2(+12_SEN)	123	DSR1#/GP45
28	SIN3/GP90	60	RTS5#/GPO26/JP1	92	VIN1	124	SOUT1/JP3
29	PCH_PSON#	61	DSR5#/GP46/ CIRRX2	93	VIN0	125	SIN1
30	PCIRST1#/GP12/ PCH_D1	62	SOUT5/GPO22/JP6	94	AVCC3	126	SIN6/GP27
31	PECI/SB-TSI_C	63	SYS_3VSB	95	SLCT/GP80	127	DTR6#/FAN_CTL5/ GP16
32	3VSB	64	3VSB	96	PE/GP81	128	RI6#/GP15/ FAN_TAC5

CONFIDENTIAL

5. Pin Description

The IT8786E-I is a part with 3.3V/1.8V voltage and therefore for both 3.3V and 1.8V application.

- The I/O buffer output pads are backdrive protected.
- The LPC/eSPI interface pins are 3.3V/1.8V.
- The Hardware Monitoring analog pins are 3.3V only. (VIN0~4 and TEMPIN1~3 etc.)
- The input voltage for all other pins is 5V tolerance. (ex: ATXPG, FAN_TAC etc.)
- For 3.3V DO pins, it is not 5V tolerant and should not be pulled up to 5V.
- For 1.8 DO pins, it is not 5V/3.3V tolerant and should not be pulled up to 5V/3.3V.

Table 5-1. Pin Description of Supplies Signals

Pin(s) No.	Symbol	Attribute	Power	Description
1, 32, 64	**3VSB**	PWR	-	***+3.3V Standby Power Supply***
94	**AVCC3**	PWR	-	***+3.3V Analog Power Supply***
66	**VBAT**	PWR	-	***+3V Battery Supply***
33	**VCORE**	AO	-	***Internal Power supply(1.8V)*** It is required to connect this pin with the external capacitance.
46	**VCCBT**	PWR		***+3.3V/+1.8V Standby Power Supply for LPC/eSPI I/F***
9, 45, 71, 112	**GNDD**	GND	-	***Digital Ground***
83	**GNDA**	GND	-	***Analog Ground***

Table 5-2. Pin Description of LPC Bus Interface Signals

Pin(s) No.	Symbol	Attribute	Power	Description
34	**LRESET#**	DI	AVCC3	***LPC RESET #*** EC block will not be reset by LRESET#, which is controlled by AVCC3 PWRGD.
35	**LDRQ#**	DO16	VCCBT	***LPC DMA Request #*** This is an encoded signal for DMA channel select.
	GPA3	DIOD16	VCCBT	***General Purpose I/O A3*** The function of this symbol is General Purpose I/O Port A Bit 3.
	SLP_SUS#	DI	VCCBT	***Deep Sleep Indication*** From CPT PCH, when asserted low, this signal indicates PCH is in the deep sleep state.
36	**SERIRQ**	DIO16	VCCBT	***Serial IRQ***
37	**LFRAME#**	DI	VCCBT	***LPC Frame #*** This signal indicates the start of the LPC cycle.
38-41	**LAD[0:3]**	DIO16	VCCBT	***LPC Address / Data 0-3*** 4-bit LPC address/bi-directional data lines. LAD0 is LSB and LAD3 is MSB.
44	**PCICLK**	DI	VCCBT	***PCI Clock*** 33MHz/25Mhz/24Mhz PCI clock input for LPC I/F and SERIRQ.
70	**PME#**	DOD8	3VSB	***Power Management Event #*** The function of this symbol is Power Management Event #. It supports the PCI PME# interface. This signal allows the peripheral to request the system to wake up from the D3 (cold) state.
	GP54	DIOD8	3VSB	***General Purpose I/O 54*** The function of this symbol is General Purpose I/O Port 5 Bit 4.
	CLKRUN#	DIOD8	AVCC3	***LPC CLKRUN# Signal***

CONFIDENTIAL

Table 5-3 Pin Description of eSPI Bus Interface Signals

Pin(s) No.	Symbol	Attribute	Power	Description
34	PLTRST#	DI-L	AVCC3	***Platform Reset*** PCH asserts PLTRST# to reset devices on the platform.
42	ESPI_ALERT#	DO-L	VCCBT	***eSPI ALERT#*** eSPI discretes the alert signal from the eSPI slave to PCH.
37	ESPI_CS#	DI-L	VCCBT	***eSPI Chip Select*** PCH drives the CS# signal low to select the eSPI slave for the transaction.
38-41	ESPI_IO[0:3]	DIO-L	VCCBT	***eSPI I/O[0:3]*** Bi-directional pins used to transfer data[0:3] between the PCH and eSPI slave device.
43	ESPI_RESET#	DI-L	VCCBT	***eSPI Reset*** eSPI reset input signal from PCH to the eSPI slave.
44	ESPICLK	DI-L	VCCBT	***eSPI Clock*** eSPI clock input from PCH to the slave device.

Note: These function configuration of these pins is determined by the power-on strapping option (JP3=0).

Table 5-4. Pin Description of Hardware Monitor Signals

Pin(s) No.	Symbol	Attribute	Power	Description
93	VIN0	AI	AVCC3	***Voltage Analog Input 0*** The function of this symbol is 0 to 2.8V FSR Analog Input.
92	VIN1	AI	AVCC3	***Voltage Analog Input 1*** The function of this symbol is 0 to 2.8V FSR Analog Input.
91	VIN2 (+12V_SEN)	AI	AVCC3	***Voltage Analog Input 2 (+12V power detector)*** The function of this symbol is 0 to 2.8V FSR Analog Input. Besides, it is the power detector for PWRGD2/3. Please refer to section 11.10 PWRGD2, PWRGD3 on page 174 for the detail.
90	VIN3	AI	AVCC3	***Voltage Analog Input 3*** The function of this symbol is 0 to 2.8V FSR Analog Input.
	5VSB_SEN	AI	3VSB	***System 5VSB Monitor*** The function of this symbol is Analog Input for System 5VSB Monitor. When the voltage drops below 1.5V (typical), the monitor circuit will assert DPWROK. The function configuration of this pin is determined by the LDN04h\FAh[bit0]=1.
89	VIN4	AI	AVCC3	***Voltage Analog Input 4*** The function of this symbol is 0 to 2.8V FSR Analog Input.
	THERMTRIP#	AI	AVCC3	***Apollo Lake THERMTRIP# Input***
88	VREF	AO	AVCC3	***Reference Voltage Output (2.8V)*** Regulated and referred voltage for external temperature sensors and negative voltage monitors.
87-85	TMPIN[1:3]	AI	AVCC3	***External Thermal Inputs [1:3]*** These pins are connected to thermistors [1:3] or thermal temperature sensors.
84	TS_D-	AI	AVCC3	***Thermal Diode Negative Input***
2	FAN_TAC1	DI	AVCC3	***Fan Tachometer Input 1*** The function of this symbol is Fan Tachometer Input 1, 0 to +5V amplitude fan tachometer input.
4	FAN_TAC2	DI	AVCC3	***Fan Tachometer Input 2*** The function of this symbol is Fan Tachometer Input 2, 0 to +5V amplitude fan tachometer input.

CONFIDENTIAL

Pin(s) No.	Symbol	Attribute	Power	Description
	GP52	DIOD8	AVCC3	***General Purpose I/O 52*** The function of this symbol is General Purpose I/O Port 5 Bit 2.
6	**FAN_TAC3**	DI	AVCC3	***Fan Tachometer Input 3*** The function of this symbol is Fan Tachometer Input 3, 0 to +5V amplitude fan tachometer input.
	GP37	DIOD8	AVCC3	***General Purpose I/O 37*** The function of this symbol is General Purpose I/O Port 3 Bit 7.
12	**ATXPG**	DI	AVCC3	***ATX Power Good*** The function of this symbol is ATX Power Good. For PWRGD2/3 signal, it is (AVCC3 power-level-detect **AND** SUSB# **AND** VIN2(+12V_SEN) **AND** ATXPG. Please refer to section 11.10 PWRGD2, PWRGD3 on page 174 for the detail.
	GP30	DIOD8	AVCC3	***General Purpose I/O 30*** The function of this symbol is General Purpose I/O Port 3 Bit 0.
31	**PECI**	PECI	AVCC3	***PECI (for 1.05V I/F)*** The function of this symbol is PECI. Specifically when External Thermal Sensor Host (PECI, SB-TSI, PCH SM-Link) is enabled (bit 6-4 of EC Index 0Ah), this pin is selected as PECI or ETS_CLK.
	SB-TSI_C	DIOD24	AVCC3	***SB-TSI I/F Clock Pin*** The secondd function of this pin is SB-TSI I/F Clock.
65	**COPEN#**	DIOD8	3VSB or VBAT	***Case Open Detection #*** The Case Open Detection is connected to a specially designed low power CMOS flip-flop dual-powered by battery or 3VSB for case open state preservation during power loss.

Table 5-5. Pin Description of Fan Controller Signals

Pin(s) No.	Symbol	Attribute	Power	Description
3	**FAN_CTL1**	DOD8	AVCC3	***Fan Control Output 1*** The function of this symbol is Fan Control Output 1. (PWM output signal to Fan's FET.)
5	**FAN_CTL2**	DOD8	AVCC3	***Fan Control Output 2*** The function of this symbol is Fan Control Output 2. (PWM output signal to Fan's FET.)
	GP51	DIOD8	AVCC3	***General Purpose I/O 51*** The function of this symbol is General Purpose I/O Port 5 Bit 1.
7	**FAN_CTL3**	DOD8	AVCC3	***Fan Control Output 3*** The function of this symbol is Fan Control Output 3. (PWM output signal to Fan's FET.)
	GP36	DIOD8	AVCC3	***General Purpose I/O 36*** The function of this symbol is General Purpose I/O Port 3 Bit 6.
11	**PWRGD2**	DOD8	AVCC3	***Power Good Output 2 with 50ms Delay Time*** The function of this symbol is Power Good Output 2. For PWRGD2/3 signal, it is (AVCC3 power-level-detect **AND** SUSB# **AND** VIN2(+12V_SEN) **AND** ATXPG). Please refer to section 11.10 PWRGD2, PWRGD3 on page 174 for the detail.
	FAN_CTL4	DOD8	AVCC3	***Fan Control Output 4*** The function of this symbol is Fan Control Output 4. (PWM output signal to Fan's FET.)

CONFIDENTIAL

Pin(s) No.	Symbol	Attribute	Power	Description
	PCH_C0	DIOD8	AVCC3	***PCH SM-Link Set 0 Clock Pin*** The function of this symbol is PCH SM-Link Clock.
127	**DTR6#**	DO8	AVCC3	***Data Terminal Ready 6 #*** DTR# is used to indicate to the MODEM or data set that the device is ready to exchange data. DTR# is activated by setting the appropriate bit in the MCR register to 1. After a Master Reset operation or during Loop mode, DTR# is set to its inactive state.
	FAN_CTL5	DOD8	AVCC3	***Fan Control Output 5*** The function of this symbol is Fan Control Output 5. (PWM output signal to Fan's FET.)
	GP16	DIOD8	AVCC3	***General Purpose I/O 16*** The function of this symbol is General Purpose I/O Port 1 Bit 6.

Table 5-6. Pin Description of Infrared Port Signals

Pin(s) No.	Symbol	Attribute	Power	Description
24	**CIRTX**	DO8	AVCC3	***Consumer Infrared Transmit Output 1*** The function of this symbol is Consumer Infrared Transmit Output 1.
	DTR3#	DO8	AVCC3	***Data Terminal Ready 1 #*** DTR# is used to indicate to the MODEM or data set that the device is ready to exchange data. DTR# is activated by setting the appropriate bit in the MCR register to 1. After a Master Reset operation or during Loop mode, DTR# is set to its inactive state.
	GPA0	DIOD8	3VSB	***General Purpose I/O A0*** The function of this symbol is General Purpose I/O Port A Bit 0.
81	**CIRRX1**	DI	3VSB	***Consumer Infrared Receive Input 1*** The function of this symbol is Consumer Infrared Receive Input 1.
	GP10	DIOD8	3VSB	***General Purpose I/O 10*** The function of this symbol is General Purpose I/O Port 1 Bit 0.
	SLP_S0#	DI	3VSB	***Sleep S0# Input*** The function of this symbol is SLP_S0# Input.
61	**CIRRX2**	DI	3VSB	***Consumer Infrared Receive Input 2*** The function of this symbol is Consumer Infrared Receive Input 2.
	DSR5#	DI	AVCC3	***Data Set Ready 5 #*** When this signal is low, it indicates that the MODEM or data set is ready to establish a communications link. The DSR# signal is a MODEM status input whose condition can be tested by reading the MSR register.
	GP46	DIOD8	3VSB	***General Purpose I/O 46*** The function of this symbol is General Purpose I/O Port 4 Bit 6.

Table 5-7. Pin Description of Serial Port 1 Signals

CONFIDENTIAL

Pin(s) No.	Symbol	Attribute	Power	Description
119	RI1#	DI	3VSB	***Ring Indicator 1 #*** When this signal is low, it indicates that a telephone ring signal has been received by the MODEM. The RI# signal is a MODEM status input whose condition can be tested by reading the MSR register.
118	DCD1#	DI	AVCC3	***Data Carrier Detect 1 #*** When this signal is low, it indicates that the MODEM or data set has detected a carrier. The DCD# signal is a MODEM status input whose condition can be tested by reading the MSR register.
121	DTR1#	DO8	AVCC3	***Data Terminal Ready 1 #*** DTR# is used to indicate to the MODEM or data set that the device is ready to exchange data. DTR# is activated by setting the appropriate bit in the MCR register to 1. After a Master Reset operation or during Loop mode, DTR# is set to its inactive state. For the power-on strapping option, please refer to Table 7-1. Power On Strapping Options on page 33.
	JP4	DI	AVCC3	***Power-On Strapping 4*** For the power-on strapping option, please refer to Table 7-1. Power On Strapping Options on page 33.
125	SIN1	DI	AVCC3	***Serial Data Input 1*** This input receives serial data from the communications link.
124	SOUT1	DO8	AVCC3	***Serial Data Output 1*** This output sends serial data to the communications link. This signal is set to a marking state (logic 1) after a Master Reset operation or when the device is in one of the Infrared communications modes. For the power-on strapping option, please refer to Table 7-1. Power On Strapping Options on page 33.
	JP3	DI	AVCC3	***Power-On Strapping 3*** For the power-on strapping option, please refer to Table 7-1. Power On Strapping Options on page 33.
123	DSR1#	DI	AVCC3	***Data Set Ready 1 #*** When this signal is low, it indicates that the MODEM or data set is ready to establish a communications link. The DSR# signal is a MODEM status input whose condition can be tested by reading the MSR register.
	GP45	DIOD8	3VSB	***General Purpose I/O 45*** The function of this symbol is General Purpose I/O Port 4 Bit 5.

CONFIDENTIAL

Pin(s) No.	Symbol	Attribute	Power	Description
122	RTS1#	DO8	AVCC3	***Request to Send 1 #*** When this signal is low, the output indicates to the MODEM or data set that the device is ready to send data. RTS# is activated by setting the appropriate bit in the MCR register to 1. After a Master Reset operation or during Loop mode, RTS# is set to its inactive state. For the power-on strapping option, please refer to Table 7-1. Power On Strapping Options on page 33.
	JP2	DI	AVCC3	***Power-On Strapping 2*** For the power-on strapping option, please refer to Table 7-1. Power On Strapping Options on page 33.
120	CTS1#	DI	AVCC3	***Clear to Send 1 #*** When this signal is low, it indicates that the MODEM or data set is ready to accept data. The CTS# signal is a MODEM status input whose condition can be tested by reading the MSR register.
	GP31	DIOD8	AVCC3	***General Purpose I/O 31*** The function of this symbol is General Purpose I/O Port 3 Bit 1.

Table 5-8. Pin Description of Serial Port 2 Signals

Pin(s) No.	Symbol	Attribute	Power	Description
14	RI2#	DI	3VSB	***Ring Indicator 2 #*** When this signal is low, it indicates that a telephone ring signal has been received by the MODEM. The RI# signal is a MODEM status input whose condition can be tested by reading the MSR register.
	GP17	DIOD8	AVCC3	***General Purpose I/O 17*** The function of this symbol is General Purpose I/O Port 3 Bit 2.
13	DCD2#	DI	AVCC3	***Data Carrier Detect 2 #*** When this signal is low, it indicates that the MODEM or data set has detected a carrier. The DCD# signal is a MODEM status input whose condition can be tested by reading the MSR register.
	GP21	DIOD8	3VSB	***General Purpose I/O 21*** The function of this symbol is General Purpose I/O Port 3 Bit 3.
16	DTR2#	DO8	AVCC3	***Data Terminal Ready 2 #*** DTR# is used to indicate to the MODEM or data set that the device is ready to exchange data. DTR# is activated by setting the appropriate bit in the MCR register to 1. After a Master Reset operation or during Loop mode, DTR# is set to its inactive state. For the power-on strapping option, please refer to Table 7-1. Power On Strapping Options on page 33.
	JP5	DI	AVCC3	***Power-On Strapping 5*** For the power-on strapping option, please refer to Table 7-1. Power On Strapping Options on page 33.
20	SIN2	DI	AVCC3	***Serial Data Input 2*** This input receives serial data from the communications link.

CONFIDENTIAL

Pin(s) No.	Symbol	Attribute	Power	Description
19	SOUT2	DO8	AVCC3	***Serial Data Output 2*** This output sends serial data to the communications link. This signal is set to a marking state (logic 1) after a Master Reset operation or when the device is in one of the Infrared communications modes. For the power-on strapping option, please refer to Table 7-1. Power On Strapping Options on page 33.
18	DSR2#	DI	AVCC3	***Data Set Ready 2 #*** When this signal is low, it indicates that the MODEM or data set is ready to establish a communications link. The DSR# signal is a MODEM status input whose condition can be tested by reading the MSR register.
	GP25	DIOD8	3VSB	***General Purpose I/O 25*** The function of this symbol is General Purpose I/O Port 2 Bit 5.
17	RTS2#	DO8	3VSB	***Request to Send 2 #*** When this signal is low, the output indicates to the MODEM or data set that the device is ready to send data. RTS# is activated by setting the appropriate bit in the MCR register to 1. After a Master Reset operation or during Loop mode, RTS# is set to its inactive state. For the power-on strapping option, please refer to Table 7-1. Power On Strapping Options on page 33.
	GP24	DIOD8	AVCC3	***General Purpose I/O 24*** The function of this symbol is General Purpose I/O Port 2 Bit 4.
15	CTS2#	DI	AVCC3	***Clear to Send 2 #*** When this signal is low, it indicates that the MODEM or data set is ready to accept data. The CTS# signal is a MODEM status input whose condition can be tested by reading the MSR register.
	GP20	DIOD8	3VSB	***General Purpose I/O 20*** The function of this symbol is General Purpose I/O Port 2 Bit 0.

Table 5-9. Pin Description of Serial Port 3 Signals

Pin(s) No.	Symbol	Attribute	Power	Description
22	RI3#	DI	3VSB	***Ring Indicator 3 #*** When this signal is low, it indicates that a telephone ring signal has been received by the MODEM. The RI# signal is a MODEM status input whose condition can be tested by reading the MSR register.
	GP14	DIOD8	AVCC3	***General Purpose I/O 14*** The function of this symbol is General Purpose I/O Port 1 Bit 4.
21	DCD3#	DI	3VSB	***Data Carrier Detect 3 #*** When this signal is low, it indicates that the MODEM or data set has detected a carrier. The DCD# signal is a MODEM status input whose condition can be tested by reading the MSR register.
	GP63	DIOD8	AVCC3	***General Purpose I/O 63*** The function of this symbol is General Purpose I/O Port 6 Bit 3.
28	SIN3	DI	AVCC3	***Serial Data Input 3*** This input receives serial data from the communications link.

CONFIDENTIAL

Pin(s) No.	Symbol	Attribute	Power	Description
	GP90	DIOD8	3VSB	***General Purpose I/O 90*** The function of this symbol is General Purpose I/O Port 9 Bit 7.
27	**SOUT3**	DO8	AVCC3	***Serial Data Output 3*** This output sends serial data to the communications link. This signal is set to a marking state (logic 1) after a Master Reset operation or when the device is in one of the Infrared communications modes. For the power-on strapping option, please refer to Table 7-1. Power On Strapping Options on page 33.
	GPOA2	DO8	3VSB	***General Purpose I/O A2*** The function of this symbol is General Purpose I/O Port A Bit 2.
26	**DSR3#**	DI	AVCC3	***Data Set Ready 3#*** When this signal is low, it indicates that the MODEM or data set is ready to establish a communications link. The DSR# signal is a MODEM status input whose condition can be tested by reading the MSR register.
	GP34	DIOD8	AVCC3	***General Purpose I/O 34*** The function of this symbol is General Purpose I/O Port 3 Bit 4
25	**RTS3#**	DO8	AVCC3	***Request to Send 3 #*** When this signal is low, the output indicates to the MODEM or data set that the device is ready to send data. RTS# is activated by setting the appropriate bit in the MCR register to 1. After a Master Reset operation or during Loop mode, RTS# is set to its inactive state. For the power-on strapping option, please refer to Table 7-1. Power On Strapping Options on page 33.
	GPOA1	DO8	3VSB	***General Purpose I/O A1*** The function of this symbol is General Purpose I/O Port A Bit 1.
23	**CTS3#**	DI	AVCC3	***Clear to Send 3 #*** When this signal is low, it indicates that the MODEM or data set is ready to accept data. The CTS# signal is a MODEM status input whose condition can be tested by reading the MSR register.
	GP13	DIOD8	AVCC3	***General Purpose I/O 13*** The function of this symbol is General Purpose I/O Port 1 Bit 3.

Table 5-10. Pin Description of Serial Port 4 Signals

Pin(s) No.	Symbol	Attribute	Power	Description
49	**RI4#**	DI	3VSB	***Ring Indicator 4#*** When this signal is low, it indicates that a telephone ring signal has been received by the MODEM. The RI# signal is a MODEM status input whose condition can be tested by reading the MSR register.
	SMB_SL_D1	DIOD8	AVCC3	***SMBusSlave Date Pin 1*** The second function is SMBus slave data pin 1. Through SMBus slave function, the user just could access EC registers.
	GP91	DIOD8	3VSB	***General Purpose I/O 91*** The function of this symbol is General Purpose I/O Port 9 Bit 1.

CONFIDENTIAL

Pin(s) No.	Symbol	Attribute	Power	Description
48	DCD4#	DI	AVCC3	***Data Carrier Detect 4 #*** When this signal is low, it indicates that the MODEM or data set has detected a carrier. The DCD# signal is a MODEM status input whose condition can be tested by reading the MSR register.
	GP66	DIOD8	3VSB	***General Purpose I/O 66*** The function of this symbol is General Purpose I/O Port 6 Bit 6.
51	DTR4#	DO8	AVCC3	***Data Terminal Ready 4 #*** DTR# is used to indicate to the MODEM or data set that the device is ready to exchange data. DTR# is activated by setting the appropriate bit in the MCR register to 1. After a Master Reset operation or during Loop mode, DTR# is set to its inactive state. For the power-on strapping option, please refer to Table 7-1. Power On Strapping Options on page 33.
	GP93	DIOD8	3VSB	***General Purpose I/O 93*** The function of this symbol is General Purpose I/O Port 9 Bit 3.
55	SIN4	DI	AVCC3	***Serial Data Input 4*** This input receives serial data from the communications link.
	GP97	DIOD8	3VSB	***General Purpose I/O 97*** The function of this symbol is General Purpose I/O Port 9 Bit 7.
54	SOUT4	DO8	AVCC3	***Serial Data Output 4*** This output sends serial data to the communications link. This signal is set to a marking state (logic 1) after a Master Reset operation or when the device is in one of the Infrared communications modes. For the power-on strapping option, please refer to Table 7-1. Power On Strapping Options on page 33.
	GP96	DIOD8	3VSB	***General Purpose I/O 96*** The function of this symbol is General Purpose I/O Port 9 Bit 6.
53	DSR4#	DI	AVCC3	***Data Set Ready 4 #*** When this signal is low, it indicates that the MODEM or data set is ready to establish a communications link. The DSR# signal is a MODEM status input whose condition can be tested by reading the MSR register.
	GP95	DIOD8	3VSB	***General Purpose I/O 95*** The function of this symbol is General Purpose I/O Port 9 Bit 5.
52	RTS4#	DO8	AVCC3	***Request to Send 4 #*** When this signal is low, the output indicates to the MODEM or data set that the device is ready to send data. RTS# is activated by setting the appropriate bit in the MCR register to 1. After a Master Reset operation or during Loop mode, RTS# is set to its inactive state. For the power-on strapping option, please refer to Table 7-1. Power On Strapping Options on page 33.
	GP94	DIOD8	3VSB	***General Purpose I/O 94*** The function of this symbol is General Purpose I/O Port 9 Bit 4.
50	CTS4#	DI	AVCC3	***Clear to Send 4 #*** When this signal is low, it indicates that the MODEM or data set is ready to accept data. The CTS# signal is a MODEM status input whose condition can be tested by reading the MSR register.

CONFIDENTIAL

Pin(s) No.	Symbol	Attribute	Power	Description
	GP92	DIOD8	3VSB	***General Purpose I/O 92*** The function of this symbol is General Purpose I/O Port 9 Bit 2.

Table 5-11. Pin Description of Serial Port 5 Signals

Pin(s) No.	Symbol	Attribute	Power	Description
57	**RI5#**	DI	3VSB	***Ring Indicator 5 #*** When this signal is low, it indicates that a telephone ring signal has been received by the MODEM. The RI# signal is a MODEM status input whose condition can be tested by reading the MSR register.
	PCH_C1	DOD8	AVCC3	***PCH SM-Link Clock 1 Pin*** The function of this symbol is PCH SM-Link Clock.
	GP65	DIOD8	AVCC3	***General Purpose I/O 65*** The function of this symbol is General Purpose I/O Port 6 Bit 5.
56	**DCD5#**	DI	AVCC3	***Data Carrier Detect 5 #*** When this signal is low, it indicates that the MODEM or data set has detected a carrier. The DCD# signal is a MODEM status input whose condition can be tested by reading the MSR register.
	SMB_SL_C1	DI	AVCC3	***SMBusSlave Clock Pin 1*** The second function is SMBus slave clock pin 1. Through SMBus slave function, the user just could access EC registers.
	GP41	DIOD8	3VSB	***General Purpose I/O 41*** The function of this symbol is General Purpose I/O Port 4 Bit 1.
59	**DTR5#**	DO8	AVCC3	***Data Terminal Ready 5 #*** DTR# is used to indicate to the MODEM or data set that the device is ready to exchange data. DTR# is activated by setting the appropriate bit in the MCR register to 1. After a Master Reset operation or during Loop mode, DTR# is set to its inactive state. For the power-on strapping option, please refer to Table 7-1. Power On Strapping Options on page 33.
	GP11	DIOD8	AVCC3	***General Purpose I/O 11*** The function of this symbol is General Purpose I/O Port 1 Bit 1.
67	**SIN5**	DI	AVCC3	***Serial Data Input 5*** This input receives serial data from the communications link.
	GP35	DIOD8	AVCC3	***General Purpose I/O 35*** The function of this symbol is General Purpose I/O Port 3 Bit 5.
62	**SOUT5**	DO8	AVCC3	***Serial Data Output 5*** This output sends serial data to the communications link. This signal is set to a marking state (logic 1) after a Master Reset operation or when the device is in one of the Infrared communications modes. For the power-on strapping option, please refer to Table 7-1. Power On Strapping Options on page 33.
	GPO22	DO8	AVCC3	***General Purpose DO 22*** The function of this symbol is General Purpose DO Port 2 Bit 2.

CONFIDENTIAL

Pin(s) No.	Symbol	Attribute	Power	Description
	JP6	DI	3VSB	***Power-On Strapping 6*** For the power-on strapping option, please refer to Table 7-1. Power On Strapping Options on page 33.
60	**RTS5#**	DO8	AVCC3	***Request to Send 5#*** When this signal is low, the output indicates to the MODEM or data set that the device is ready to send data. RTS# is activated by setting the appropriate bit in the MCR register to 1. After a Master Reset operation or during Loop mode, RTS# is set to its inactive state. For the power-on strapping option, please refer to Table 7-1. Power On Strapping Options on page 33.
	GPO26	DO8	AVCC3	***General Purpose DO 26*** The function of this symbol is General Purpose DO Port 2 Bit 6.
	JP1	DI	AVCC3	***Power-On Strapping 1*** For the power-on strapping option, please refer to Table 7-1. Power On Strapping Options on page 33.
58	**CTS5#**	DI	AVCC3	***Clear to Send 5 #*** When this signal is low, it indicates that the MODEM or data set is ready to accept data. The CTS# signal is a MODEM status input whose condition can be tested by reading the MSR register.
	GP64	DIOD8	AVCC3	***General Purpose I/O 64*** The function of this symbol is General Purpose I/O Port 6 Bit 4.

Table 5-12. Pin Description of Serial Port 6 Signals

Pin(s) No.	Symbol	Attribute	Power	Description
128	**RI6#**	DI	3VSB	***Ring Indicator 6 #*** When this signal is low, it indicates that a telephone ring signal has been received by the MODEM. The RI# signal is a MODEM status input whose condition can be tested by reading the MSR register.
	FAN_TAC5	DI	AVCC3	***Fan Tachometer Input 5*** The function of this symbol is Fan Tachometer Input 2, 0 to +5V amplitude fan tachometer input.
	GP15	DIOD8	AVCC3	***General Purpose I/O 15*** The function of this symbol is General Purpose I/O Port 1 Bit 5.
113	**DCD6#**	DI	AVCC3	***Data Carrier Detect 6 #*** When this signal is low, it indicates that the MODEM or data set has detected a carrier. The DCD# signal is a MODEM status input whose condition can be tested by reading the MSR register.
	GP67	DIOD8	3VSB	***General Purpose I/O 67*** The function of this symbol is General Purpose I/O Port 6 Bit 7.
126	**SIN6**	DI	AVCC3	***Serial Data Input 6*** This input receives serial data from the communications link.
	GP27	DIOD8	3VSB	***General Purpose I/O 27*** The function of this symbol is General Purpose I/O Port 2 Bit 7.

CONFIDENTIAL

Pin(s) No.	Symbol	Attribute	Power	Description
117	SOUT6	DO8	AVCC3	***Serial Data Output 6*** This output sends serial data to the communications link. This signal is set to a marking state (logic 1) after a Master Reset operation or when the device is in one of the Infrared communications modes. For the power-on strapping option, please refer to Table 7-1. Power On Strapping Options on page 33.
	GP32	DIOD8	AVCC3	***General Purpose I/O 32*** The function of this symbol is General Purpose I/O Port 3 Bit 2.
116	DSR6#	DI	AVCC3	***Data Set Ready 6 #*** When this signal is low, it indicates that the MODEM or data set is ready to establish a communications link. The DSR# signal is a MODEM status input whose condition can be tested by reading the MSR register.
	GP47	DIOD8	AVCC3	***General Purpose I/O 47*** The function of this symbol is General Purpose I/O Port 4 Bit 7.
115	RTS6#	DO8	AVCC3	***Request to Send 6 #*** When this signal is low, the output indicates to the MODEM or data set that the device is ready to send data. RTS# is activated by setting the appropriate bit in the MCR register to 1. After a Master Reset operation or during Loop mode, RTS# is set to its inactive state. For the power-on strapping option, please refer to Table 7-1. Power On Strapping Options on page 33.
	GP50	DIOD8	AVCC3	***General Purpose I/O 50*** The function of this symbol is General Purpose I/O Port 5 Bit 0.
114	CTS6#	DI	AVCC3	***Clear to Send 6 #*** When this signal is low, it indicates that the MODEM or data set is ready to accept data. The CTS# signal is a MODEM status input whose condition can be tested by reading the MSR register.
	GP33	DIOD8	AVCC3	***General Purpose I/O 33*** The function of this symbol is General Purpose I/O Port 3 Bit 3.

Table 5-13. Pin Description of Parallel Port Signals

Pin(s) No.	Symbol	Attribute	Power	Description
95	SLCT	DI	AVCC3	***Printer Select*** The function of this symbol is Printer Select. This signal goes high when the line printer has been selected.
	GP80	DIOD24	3VSB	***General Purpose I/O 80*** The second General Purpose I/O 80function of this pin is General Purpose I/O Port 8 Bit 0. The function will be SLTC if LDN3 (parallel port) is enabled; otherwise, GP80.
96	PE	DI	AVCC3	***Printer Paper End*** The function of this symbol is Printer Paper End. This signal is set high by the printer when it runs out of paper.
	GP81	DIOD8	3VSB	***General Purpose I/O 81*** The function of this symbol is General Purpose I/O Port 8 Bit 1. The function will be PE if LDN3 (parallel port) is enabled; otherwise, GP81.

CONFIDENTIAL

Pin(s) No.	Symbol	Attribute	Power	Description
97	**BUSY**	DI	AVCC3	***Printer Busy*** The function of this symbol is Printer Busy. This signal goes high when the line printer has a local operation in progress and cannot accept any data.
	GP82	DIOD8	3VSB	***General Purpose I/O 82*** The function of this symbol is General Purpose I/O Port 8 Bit 2. The function will be BUSY when LDN3 (parallel port) is enabled; otherwise, GP82.
98	**ACK#**	DI	AVCC3	***Printer Acknowledge #*** The function of this symbol is Printer Acknowledge #. This signal goes low to indicate that the printer has already received a character and is ready to accept another one.
	GP83	DIOD8	3VSB	***General Purpose I/O 83*** The function of this symbol is General Purpose I/O Port 8 Bit 3. The function will be ACK# if LDN3 (parallel port) is enabled; otherwise, GP83.
99	**SLIN#**	DIO24	AVCC3	***Printer Select Input #*** T The function of this symbol is Printer Select Input #. When this signal is low, the printer is selected and it is derived from the complement of bit 3 of Control Port Register (Base Address 1 + 02h) (refer to page 140).
	GP84	DIOD24	3VSB	***General Purpose I/O 84*** The function of this symbol is General Purpose I/O Port 8 Bit 4. The function will be SLIN# if LDN3 (parallel port) is enabled; otherwise, GP84.
100	**INIT#**	DIO24	AVCC3	***Printer Initialize #*** The function of this symbol is Printer Initialize #. When this signal is low, the printer is selected and it is derived from the complement of bit 2 of Control Port Register (Base Address 1 + 02h) (refer to page 140).
	GP85	DIOD24	3VSB	***General Purpose I/O 85*** The function of this symbol is General Purpose I/O Port 8 Bit 5. The function will be INIT# if LDN3 (parallel port) is enabled; otherwise, GP85.
101	**ERR#**	DI	AVCC3	***Printer Error #*** The function of this symbol is Printer Error #, which will be configured by programming the software configuration registers (LDN3 (parallel port) enabled). When this signal is low, it indicates that the printer has encountered an error and the error message can be read from bit 3 of Status Port Register (Base Address 1 + 01h) (refer to page 140).
	GPA5	DIOD24	3VSB	***General Purpose I/O A5*** The function of this symbol is General Purpose I/O Port A Bit 5.
102	**AFD#**	DIO24	AVCC3	***Printer Auto Line Feed #*** The function of this symbol is Printer Auto Line Feed #. When this signal is low, it is derived from the complement of bit 1 of Control Port **Register** (Base Address 1 + 02h) (refer to page 140) and is used to advance one line after each line is printed.

CONFIDENTIAL

Pin(s) No.	Symbol	Attribute	Power	Description
	GP86	DIOD24	3VSB	***General Purpose I/O 86*** The function of this symbol is General Purpose I/O Port 8 Bit 6. The function will be AFD# if LDN3 (parallel port) is enabled; otherwise, GP86.
103	**STB#**	DI	AVCC3	***Printer Strobe #*** The function of this symbol is Printer Strobe. When this signal is low, it is the complement of bit 0 of Control Port Register (Base Address 1 + 02h) (refer to page 140) and is used to strobe the printing data into the printer.
	GP87	DIOD24	3VSB	***General Purpose I/O 87*** The function of this symbol is General Purpose I/O Port 8 Bit 7. The function will be STB# if LDN3 (parallel port) is enabled; otherwise, GP87.
104-105	**PD[0:1]**	DIO24	AVCC3	***Parallel Port Data [0:1]*** The first function of these pins is Parallel Port Data [0:1]. This bus provides a byte-wide input or output to the system. The eight lines are held in a high impedance state when the port is deselected.
	GP7[0:1]	DIOD24	3VSB	***General Purpose I/O 7 [0:1]*** The second function of these pins is General Purpose I/O Port 0-1. The function will be PD[0:1] if LDN3 (parallel port) is enabled; otherwise; GP7[0:1].
106-108	**PD[2:4]**	DI	AVCC3	***Parallel Port Data [2:4]*** The function of this symbol is Parallel Port Data [2:4]. This bus provides a byte-wide input or output to the system. The eight lines are held in a high impedance state when the port is deselected.
	GP7[2:4]	DIOD24	3VSB	***General Purpose I/O 7 [2:4]*** The function of this symbol is General Purpose I/O Port 2-4. The function will be PD[2:4] if LDN3 (parallel port) is enabled; otherwise; GP7[2:4].
109-111	**PD[5:7]**	DI	AVCC3	***Parallel Port Data [5:7]*** The function of this symbol is Parallel Port Data [5:7]. This bus provides a byte-wide input or output to the system. The eight lines are held in a high impedance state when the port is deselected.
	GP7[5:7]	DIOD24	3VSB	***General Purpose I/O 7[5:7]*** The function of this symbol is General Purpose I/O Port 5-7. The function will be PD[5:7] if LDN3 (parallel port) is enabled; otherwise; GP7[5:7].

Table 5-14. Pin Description of Keyboard Controller Signals

Pin(s) No.	Symbol	Attribute	Power	Description
77	**KDAT**	DIOD24	3VSB	***Keyboard Data*** The function of this symbol is Keyboard Data.
	GP61	DIOD24	AVCC3	***General Purpose I/O 61*** The function of this symbol is General Purpose I/O Port 6 Bit 1. This set supports Simple I/O function only. This pin doesn't support internal pull-up.
78	**KCLK**	DIOD24	3VSB	***Keyboard Clock*** The function of this symbol is Keyboard Clock.

CONFIDENTIAL

Pin(s) No.	Symbol	Attribute	Power	Description
	GP60	DIOD24	AVCC3	***General Purpose I/O 60*** The function of this symbol is General Purpose I/O Port 6 Bit 0. This set supports Simple I/O function only. This pin doesn't support internal pull-up.
79	**MDAT**	DIOD24	AVCC3	***PS/2 Mouse Data*** The function of this symbol is PS/2 Mouse Data.
	GP57	DIOD24	AVCC3	***General Purpose I/O 57*** The function of this symbol is General Purpose I/O Port 5 Bit 7. This pin doesn't support internal pull-up.
80	**MCLK**	DIOD24	AVCC3	***PS/2 Mouse Clock*** The function of this symbol is PS/2 Mouse Clock.
	GP56	DIOD24	AVCC3	***General Purpose I/O 56*** The function of this symbol is General Purpose I/O Port 5 Bit 6. This pin doesn't support internal pull-up.
42	**ESPI_ALERT #**	DO16	VCCBT	***eSPI ALERT#*** eSPI discretes the alert signal from the eSPI slave to PCH. The function configuration of this pin is determined by the power-on strapping option (JP3=0).
	KRST#	DO16	VCCBT	***Keyboard Reset #*** The function of this symbol is Keyboard Reset #.
	GP62	DIOD16	VCCBT	***General Purpose I/O 62*** The function of this symbol is General Purpose I/O Port 6 Bit 2. This set supports Simple I/O function only.
43	**GA20**	DO16	VCCBT	***Gate Address 20***
	ESPI_RESET #	DI	VCCBT	***eSPI Reset*** eSPI reset input signal from PCH to the eSPI slave. The function configuration of this pin is determined by the power-on strapping option (JP3=0).

Table 5-15. Pin Description of Miscellaneous Signals

Pin(s) No.	Symbol	Attribute	Power	Description
8	**FAN_TAC4**	DI	AVCC3	***Fan Tachometer Input 4*** The function of this symbol is Fan Tachometer Input 4, 0 to +5V amplitude fan tachometer input.
	GP23	DIOD8	3VSB	***General Purpose I/O 23*** The function of this symbol is General Purpose I/O Port 2 Bit 3.
10	**5VSB_CTRL#**	DOD8	3VSB	***5VSB_CTRL# Power Control Signal*** Please refer to section 11.11 Energy-using Product (EuP) Power Control Signal Timings on page 176 for the detail. The function configuration of this pin is determined by the power-on strapping option (JP1=1).
	PCH_D0	DIOD8	AVCC3	***PCH SM-Link Set 0 Data Pin*** The function of this symbol is PCH SM-Link Data.
29	**PCH_PSON#**	DI	3VSB	***PCH_PSON# Input*** From PCH, when asserted high, this signal indicates PCH is in the S0ix state.
47	**SB-TSI_D**	DIOD24	AVCC3	***SB-TSI I/F Data*** The function of this symbol is SB-TSI I/F Data.
	S0_IDLE#	DIOD8	3VSB	***S0_IDLE# Signal*** The function of this symbol is S0 Idle output. When this signal is low, it indicates PCH is in the S0ix state.

CONFIDENTIAL

Pin(s) No.	Symbol	Attribute	Power	Description
69	**PWRON#**	DOD8	3VSB	***Power On Request Output #*** The function of this symbol is Power On Request Output #.
	GP44	DIOD8	3VSB	***General Purpose I/O44*** The function of this symbol is General Purpose I/O Port 4 Bit 4.
72	**PANSWH#**	DI	3VSB	***Main Power Switch Button Input #*** The function of this symbol is Main Power Switch Button Input #.
	GP43	DIOD8	3VSB	***General Purpose I/O 43*** The function of this symbol is General Purpose I/O Port 4 Bit 3.
73	**PSON#**	DOD8	3VSB	***Power Supply On-Off Output #*** The function of this symbol is Power Supply On-Off Control Output #.
	GP42	DIOD8	3VSB	***General Purpose I/O 42*** The function of this symbol is General Purpose I/O Port 4 Bit 2.
68	**SUSB#**	DI	3VSB	***SUSB # Input*** The function of this symbol is SUSB# Input.
74	**SUSC#**	DI	3VSB	***SUSC# Input*** The function of this symbol is SUSC# Input.
	GP53	DIOD8	3VSB	***General Purpose I/O 53*** The function of this symbol is General Purpose I/O Port 5 Bit 3.
75	**PWRGD3**	DOD8	3VSB	***Power Good Output 3 with 150ms Delay Time*** The function of this symbol is Power Good Output 3. For PWRGD2/3 signal, it is (AVCC3 power-level-detect **AND** SUSB# **AND** VIN2(+12V_SEN) **AND** ATXPG. Please refer to section 11.10 PWRGD2, PWRGD3 on page 174 for the detail.
	SMB_SL_D0	DIOD8	AVCC3	***SMBus Slave Data Pin 0*** The second function is SMBus Save Data Pin 0. The user just can access EC registers through this function.
	GPA4	DIOD8	3VSB	***General Purpose I/O A4*** The function of this symbol is General Purpose I/O Port A Bit 4.
76	**3VSBSW#**	DO8	3VSB	***3VSBSW#*** The function of this symbol is 3VSBSW#.
	SMB_SL_C0	DI	AVCC3	***SMBusSlave Clock Pin 0*** The first function of these pins is SMBus Slave Clock Pin 0. The user just can access EC registers through this function.
	GP40	DIOD8	3VSB	***General Purpose I/O 40*** The function of this symbol is General Purpose I/O Port 4 Bit 0.
30	**PCIRST1#**	DO8	AVCC	***PCI Reset 1 #*** The function of this symbol is PCI Reset 1 #, which is a buffer of LRESET#.
	GP12	DIOD8	AVCC	***General Purpose I/O 12*** The function of this symbol is General Purpose I/O Port 1 Bit 2.
	PCH_D1	DIOD8	AVCC	***PCH SM-Link Set 1 Data*** The function of this symbol is PCH SM-Link Data.
82	**RSMRST#**	**DOD8**	3VSB	***Resume Reset #*** The function of this symbol is Resume Reset #. It is a power good signal of SYS_3VSB.

CONFIDENTIAL

Pin(s) No.	Symbol	Attribute	Power	Description
	GP55	DIOD8	3VSB	***General Purpose I/O 55*** The function of this symbol is General Purpose I/O Port 5 Bit 5.
63	**SYS_3VSB**	AI	3VSB	***System 3.3V Standby Power Detector*** The function of this symbol is System Standby Power Detector for RSMRST# output and EuP signal Control. Please refer to Table 7-1. Power On Strapping Options on page 33, Figure 7-1. IT8786E-I EUP Applications Circuitry for Intel ICH on page 34, section 11.11 Energy-using Product (EuP) Power Control Signal Timings on page 176 for the detail.

IO Cell:
DO8: 8mA Digital Output buffer
DOD8: 8mA Digital Open-Drain Output buffer
DO16: 16mA Digital Output buffer
DO24: 24mA Digital Output buffer
DO24L: 24mA shink/8mA drive Digital Output buffer

DIO8: 8mA Digital Input/Output buffer
DIOD8: 8mA Digital Open-Drain Input/Output buffer
DIO16: 16mA Digital Input/Output buffer
DIOD16: 16mA Digital Open-Drain Input/Output buffer
DIO24: 24mA Digital Input/Output buffer
DIOD24: 24mA Digital Open-Drain Input/Output buffer

DI: Digital Input
AI: Analog Input
AO: Analog Output

PECI: Special design for PECI interface
IO_SW: Special type of Input/Output; pins of this type connected in pairs through a switch

CONFIDENTIAL

6. List of GPIO Pins

Table 6-1. GPIO Alternate Function

Group	Bit	1st Func	Conditions	2nd Func	Conditions	3rd Func	Conditions	4th Func	Conditions	Note
GPIO 1x	0	CIRRX1 (DI)		GP10 (DIOD8)	25h<0>=1	SLP_S0# (DI)	E7h<7>=1			
	1	DTR5# (DO8)		GP11 (DIOD8)	25h<1>=1					
	2	PCIRST1# (DO8)		PCH_D1 (DIOD8)	2Ah<3>=1; EC index 0A[6]=1	GP12 (DIOD8)	25h<2>=1			
	3	CTS3# (DI)	25h<3>=0	GP13 (DIOD8)	25h<3>=1					
	4	RI3# (DI)	25h<4>=0	GP14 (DIOD8)	25h<4>=1					
	5	RI6# (DI)		FAN_TAC5 (DI)		GP15 (DIOD8)	25h<5>=1			
	6	FAN_CTL5 (DOD8)	EC Index 0Bh<3:2>	DTR5# (DO8)		GP16 (DIOD8)	25h<6>=1			
	7	RI2# (DI)		GP17 (DIOD8)	25h<7>=1					
GPIO 2x	0	CTS2# (DI)	26h<0>=0	GP20 (DIOD8)	26h< 0>=1					
	1	DCD2# (DI)	26h<1>=0	GP21 (DIOD8)	26h<1>=1					
	2	SOUT5 (DO8)	26h<2>=0	GPO22 (DO8)	26h<2>=1					
	3	DPWROK (DOD8)	26h[3]=0	GP23 (DIOD8)	26h<3>=1	FAN_TAC4 (DI)				
	4	RTS2# (DO8)	26h<4>=0	GP24 (DIOD8)	26h<4>=1					
	5	DSR2# (DI)	26h<5>=0	GP25 (DIOD8)	26h<5>=1					
	6	RTS5# (DO8)	26h<6>=0	GPO26 (DO8)	26h<6>=1					
	7	SIN6 (DI)	26h<7>=0	GP27 (DIOD8)	26h<7>=1					
GPIO	0	ATXPG (DI)	27h<0>=0	GP30 (DIOD8)	27h<0>=1					

CONFIDENTIAL

Group	Bit	1st Func	Conditions	2nd Func	Conditions	3rd Func	Conditions	4th Func	Conditions	Note
3x	1	CTS1# (DI)	27h<1>=0 LDN1 enable	GP31 (DIOD8)	27h<1>=1					
	2	SOUT6 (DO8)	27h<2>=0	GP32 (DIOD8)	27h<2>=1					
	3	CTS6# (DI)	27h<3>=0	GP33 (DIOD8)	27h<3>=1					
	4	DSR3# (DI)	27h<4>=0	GP34 (DIOD8)	27h<4>=1					
	5	SIN5 (DI)	27h<5>=0	GP35 (DIOD8)	27h<5>=1					
	6	FAN_CTL3 (DOD8)		GP36 (DIOD8)	27h<6>=1					
	7	FAN_TAC3 (DI)		GP37 (DIOD8)	27h<7>=1					
GP IO4x	0	3VSBSW# (DO8)	2Ah<7>=1	SMB_SL_C0 (DI)	EC F3<1>=1	GP40 (DIOD8)	28h<0>=1			
	1	DCD5# (DI)	28h<1>=0 LDNB enable	SMB_SL_C1 (DI)	EC F3<2>=1	GP41 (DIOD8)	28h<1>=1			
	2	PSON# (DOD8)		GP42 (DIOD8)	28h<2>=1					
	3	PANSWH# (DI)		GP43 (DIOD8)	28h<3>=1					
	4	PWRON# (DOD8)		GP44 (DIOD8)	28h<4>=1					
	5	DSR1# (DI)		GP45 (DIOD8)	28h<5>=1					
	6	CIRRX2 (DI)	28h<6>=0. LDN4 F2h<0>=1	DSR5# (DI)	28h<6>=0	GP46 (DIOD8)	28h<6>=1			
	7	DSR6# (DI)		GP47 (DIOD8)	28h<7>=1					

CONFIDENTIAL

Group	Bit	1st Func	Conditions	2nd Func	Conditions	3rd Func	Conditions	4th Func	Conditions	Note
GPIO 5x	0	RTS6# (DO8)	29h<0>=0	GP50 (DIOD8)	29h<0>=1					
	1	FAN_CTL2 (DOD8)		GP51 (DIOD8)	29h<1>=1					
	2	FAN_TAC2 (DI)		GP52 (DIOD8)	29h<2>=1					
	3	SUSC# (DI)		GP53 (DIOD8)	29h<3>=1					
	4	PME# (DOD8)		GP54 (DIOD8)	29h<4>=1	CLKRUN# (DIOD8)	2Dh<0>=1			
	5	RSMRST# (DOD8)		GP55 (DIOD8)	29h<5>=1					
	6	MCLK (DIOD24)		GP56 (DIOD24)	29h<6>=1					No Internal Pull-up Simple I/O Only
	7	MDAT (DIOD24)		GP57 (DIOD24)	29h<6>=1					No Internal Pull-up Simple I/O Only
GP IO6x	0	KCLK (DIOD24)		GP60 (DIOD24)	29h<6>=1					No Internal Pull-up Simple I/O Only
	1	KDAT (DIOD24)		GP61 (DIOD24)	29h<6>=1					No Internal Pull-up Simple I/O Only
	2	KRST# (DO8)		GP62 (DIOD16)	29h<6>=1					Simple I/O Only
	3	DCD3# (DI)		GP63 (DIOD8)						Simple I/O Only
	4	CTS5# (DI)		GP64 (DIOD8)						Simple I/O Only
	5	RI5# (DI)		PCH_C1 (DIOD8)	2Ah<2>=1; LDN4 F3[4]=1	GP65 (DOD8)				Simple I/O Only
	6	DCD4# (DI)		GP66 (DIOD8)						Simple I/O Only This GPIO pad is powered by VBAT, register is powered by 3VSB
	7	DCD6# (DI)		GP67 (DIOD8)						
GPIO 7x	0	PD0 (DIO24)		GP70 (DIOD24)						Simple I/O Only
	1	PD1 (DIO24)		GP71 (DIOD24)						Simple I/O Only
	2	PD2 (DIO24)		GP72 (DIOD24)						Simple I/O Only

CONFIDENTIAL

Group	Bit	1st Func	Conditions	2nd Func	Conditions	3rd Func	Conditions	4th Func	Conditions	Note
	3	PD3 (DIO24)		GP73 (DIOD24)						Simple I/O Only
	4	PD4 (DIO24)		GP74 (DIOD24)						Simple I/O Only
	5	PD5 (DIO24)		GP75 (DIOD24)						Simple I/O Only
	6	PD6 (DIO24)		GP76 (DIOD24)						Simple I/O Only
	7	PD7 (DIO24)		GP77 (DIOD24)						Simple I/O Only
GP IO8x	0	SLCT# (DI)		GP80 (DIOD24)						Simple I/O Only
	1	PE# (DI)		GP81 (DIOD8)						Simple I/O Only
	2	BUSY# (DI)		GP82 (DIOD8)						Simple I/O Only
	3	ACK# (DI)		GP83 (DIOD8)						Simple I/O Only
	4	SLIN# (DIO24)		GP84 (DIOD24)						Simple I/O Only
	5	INIT# (DIO24)		GP85 (DIOD24)						Simple I/O Only
	6	AFD# (DIO24)		GP86 (DIOD24)						Simple I/O Only
	7	STB# (DI)		GP87 (DIOD24)						Simple I/O Only
GPIO 9x	0	GP90 (DIOD8)	D3h<0>=1	SIN3 (DI)	D3h<0>=0					Simple I/O Only
	1	GP91 (DIOD8)	D3h<1>=1	RI4# (DI)	D3h<1>=0	SMB_SL_D1 (DIOD8)	LDN4 F3h<2>=1			Simple I/O Only
	2	GP92 (DIOD8)	D3h<2>=1	CTS4# (DI)	D3h<2>=0					Simple I/O Only
	3	GP93 (DIOD8)	D3h<3>=1	DTR4# (DO8)	D3h<3>=0					Simple I/O Only
	4	GP94 (DIOD8)	D8h<4>=1	RTS4# (DO8)	D3h<4>=0					Simple I/O Only
	5	GP95 (DIOD8)	D3h<5>=1	DSR4# (DI)	D3h<5>=0					Simple I/O Only
	6	GP96 (DIOD8)	D3h<6>=1	SOUT4 (DO8)	D3h<6>=0					Simple I/O Only

CONFIDENTIAL

Group	Bit	1st Func	Conditions	2nd Func	Conditions	3rd Func	Conditions	4th Func	Conditions	Note
	7	GP97 (DIOD8)	D3h<7>=1	SIN4 (DI)	D3h<7>=0					Simple I/O Only
GPIO Ax	0	GPA0 (DIOD8)	D8h<0>=1	DTR3# (DO8)	D8h<0>=0	CIRTX (DO8)	CIR IER<7>=1			Simple I/O Only
	1	GPOA1 (DIOD8)	D8h<1>=1	RTS3# (DO8)	D8h<1>=0					Simple I/O Only
	2	GPOA2 (DIOD8)	D8h<2>=1	SOUT3 (DO8)	D8h<2>=0					Simple I/O Only
	3	GPA3 (DIOD8)	D8h<3>=1	LDRQ (DO8)	D8h<3>=0	SLP_SUS#	E7h<4>=1			Simple I/O Only
	4	GPA4 (DIOD8)	D8h<4>=1	PWRGD3 (DO8)	D8h<4>=0	SMB_SL_C0 (DIOD8)	LDN4 F3h<1>=1			Simple I/O Only
	5	GPA5 (DIOD8)	D8h<5>=1	ERR (DI)	D8h<5>=0					Simple I/O Only
	6									
	7									

CONFIDENTIAL

Table 6-2. GPIO Registers and Power Pads Table

GP I/O Group 1	GPIO10	GPIO11	GPIO12	GPIO13	GPIO14	GPIO15	GPIO16	GPIO17
GPIO Control in S3/S5	O	X	X	X	X	X	X	X
Global Register Index 25h<bit0-7>	S	-	-	-	-	-	-	-
Pin Polarity (Index B0h)	-	-	-	-	-	-	-	-
Internal Pull-up Enable (Index B8h)	X	S	S	S	S	S	S	S
Simple I/O Enable (Index C0h)	S	-	-	-	-	-	-	-
Output/Input Selection (Index C8h)	S	-	-	-	-	-	-	-
GP I/O Group 2	**GPIO20**	**GPIO21**	**GPIO22**	**GPIO23**	**GPIO24**	**GPIO25**	**GPIO26**	**GPIO27**
GPIO Control in S3/S5	O	O	X	O	O	O	X	O
Global Register Index 26<bit0-7>	S	S	S	S	S	S	S	S
Pin Polarity (Index B1h)	S	S	S	S	S	S	S	S
Internal Pull-up Enable (Index B9h)	-	-	-	-	-	-	-	-
Simple I/O Enable (Index C1h)	S	S	S	S	S	S	S	S
Output/Input Selection (Index C9h)	S	S	S	S	S	S	S	S
GP I/O Group 3	**GPIO30**	**GPIO31**	**GPIO32**	**GPIO33**	**GPIO34**	**GPIO35**	**GPIO36**	**GPIO37**
GPIO Control in S3/S5	X	X	X	X	X	X	X	X
Global Register Index 27h<bit0-7>	S	S	S	S	S	S	S	S
Pin Polarity (Index B2h)	-	-	-	-	-	-	-	-
Internal Pull-up Enable (Index BAh)	-	-	-	-	-	-	-	-
Simple I/O Enable (Index C2h)	-	-	-	-	-	-	-	-
Output/Input Selection (Index CAh)	-	-	-	-	-	-	-	-
GP I/O Group 4	**GPIO40**	**GPIO41**	**GPIO42**	**GPIO43**	**GPIO44**	**GPIO45**	**GPIO46**	**GPIO47**
GPIO Control in S3/S5	O	O	O	O	O	O	O	-
Global Register Index 28h<bit0-7>	S	S	S	S	S	S	S	-
Pin Polarity (Index B3h)	-	-	-	-	-	-	-	-
Internal Pull-up Enable (Index BBh)	-	-	-	-	-	-	-	-
Simple I/O Enable (Index C3h)	S	S	S	S	S	S	S	-
Output/Input Selection (Index CBh)	S	S	S	S	S	S	S	-
GP I/O Group 5	**GPIO50**	**GPIO51**	**GPIO52**	**GPIO53**	**GPIO54**	**GPIO55**	**GPIO56**	**GPIO57**
GPIO Control in S3/S5	-	-	-	O	O	O	-	-
Global Register Index 29h<bit0-7>	-	-	-	S	S	S	-	-
Pin Polarity (Index B4h)	-	-	-	-	-	-	-	-
Internal Pull-up Enable (Index BCh)	-	-	-	X	X	-	-	-
Simple I/O Enable (Index C4h)	-	-	-	S	S	S	-	-
Output/Input Selection (Index CCh)	-	-	-	S	S	S	-	-
Note:	GP56 and GP57 enabled by index 29h<bit 6>=1							

GP I/O Group 6	GPIO60	GPIO61	GPIO62	GPIO63	GPIO64	GPIO65	GPIO66	GPIO67
GPIO Control in S3/S5	X	X	X	O	O	X	O	O
Global Register Index 29h<bit 7-6>	-	-	-	X	X	X	X	X
Internal Pull-up Enable (Index BDh)	-	-	X	-	-	-	-	-
Output/Input Selection (Index CDh)	-	-	-	S	S	S	S	S
GP I/O Group 7	**GPIO70**	**GPIO71**	**GPIO72**	**GPIO73**	**GPIO74**	**GPIO75**	**GPIO76**	**GPIO77**
GPIO Control in S3/S5	O	O	O	O	O	O	O	O
Output/Input Selection (Index CEh)	S	S	S	S	S	S	S	S
Note:	For GP70~GP77 Simple IO Enable: a. Parallel Port Disable: LDN3\Index30h=00h							
GP I/O Group 8	**GPIO80**	**GPIO81**	**GPIO82**	**GPIO83**	**GPIO84**	**GPIO85**	**GPIO86**	**GPIO87**
GPIO Control in S3/S5	O	O	O	O	O	O	O	O
Output/Input Selection (Index CFh)	S	S	S	S	S	S	S	S
Note:	For GP80~GP87 Simple IO Enable: a. Parallel Port Disable: LDN3\Index30h=00h b. SMBus Isolation Disable: Global Index2Ch<bit 7>=1							
GP I/O Group 9	**GPIO90**	**GPIO91**	**GPIO92**	**GPIO93**	**GPIO94**	**GPIO95**	**GPIO96**	**GPIO97**

CONFIDENTIAL

GPIO Control in S3/S5		**O**	**O**	**O**	**O**	**O**	**O**	**O**	**O**
Pin Polarity	(Index D1h)	**S**	**S**	**S**	**S**	**S**	**S**	**S**	**S**
Internal Pull-up Enable	(Index D4h)	**S**	**S**	**S**	**S**	**S**	**S**	**S**	**S**
Simple I/O enable	(Index D3h)	**S**	**S**	**S**	**S**	**S**	**S**	**S**	**S**
Output/Input selection	(Index D2h)	**S**	**S**	**S**	**S**	**S**	**S**	**S**	**S**
GP I/O Group A		**GPIOA0**	**GPOA1**	**GPOA2**	**GPIOA3**	**GPIOA4**	**GPIOA5**		
GPIO Control in S3/S5		**O**	**X**	**X**	**O**	**O**	**O**		
Pin Polarity	(Index D6h)	**S**	**S**	**S**	**S**	**S**	**S**		
Internal Pull-up Enable	(Index D9h)	**S**	**X**	**X**	**X**	**S**	**S**		
Simple I/O enable	(Index D8h)	**S**	**S**	**S**	**S**	**S**	**S**		
Output/Input selection	(Index D7h)	**S**	**S**	**S**	**S**	**S**	**S**		

S: Register kept by 3VSB
- : Register kept by AVCC3
X: Not supported by this chip
O: GPIO control in S3/S5 supported

CONFIDENTIAL

7. Power on Strapping Options and Special Pin Routings

Table 7-1. Power On Strapping Options

	Symbol	Strapping Event	Value	Description
JP2 Pin 122	Vih/Vil_SEL	Internal 3VSB_OK	1	3.3V Not Bay-Trail Platform*Note1
			0	1.8V Bay-Trail Platform*Note2
JP3 Pin 124	LPC_eSPI_SEL	Internal 3VSB_OK	1	LPC Mode
			0	eSPI Mode*Note4
JP4 Pin 121	ENTER_KEY	Internal VCC-OK	1	Enter Key: 2E/2F (87h, 01h, 55h, 55h)
			0	Enter Key: 4E/4F (87h, 01h, 55h, AAh)
JP5 Pin 16	CHIP_SEL	Internal VCC-OK	--	Chip Selection in Configuration
JP6 Pin 62	ATX_SEL	Internal 3VSB_OK	1	ATX Mode
			0	AT Mode

Notes:

1. 1.8V input threshold voltage for SUSB#/SUSC#/LPC/eSPI/SERIRQ#/GP10/GP20/GP54/GP62 signals
2. 3.3V input threshold voltage for SUSB#/SUSC#/LPC/eSPI/SERIRQ#/GP10/GP20/GP54/GP62 signals

CONFIDENTIAL

Figure 7-1. IT8786E-I EUP Applications Circuitry for Intel ICH

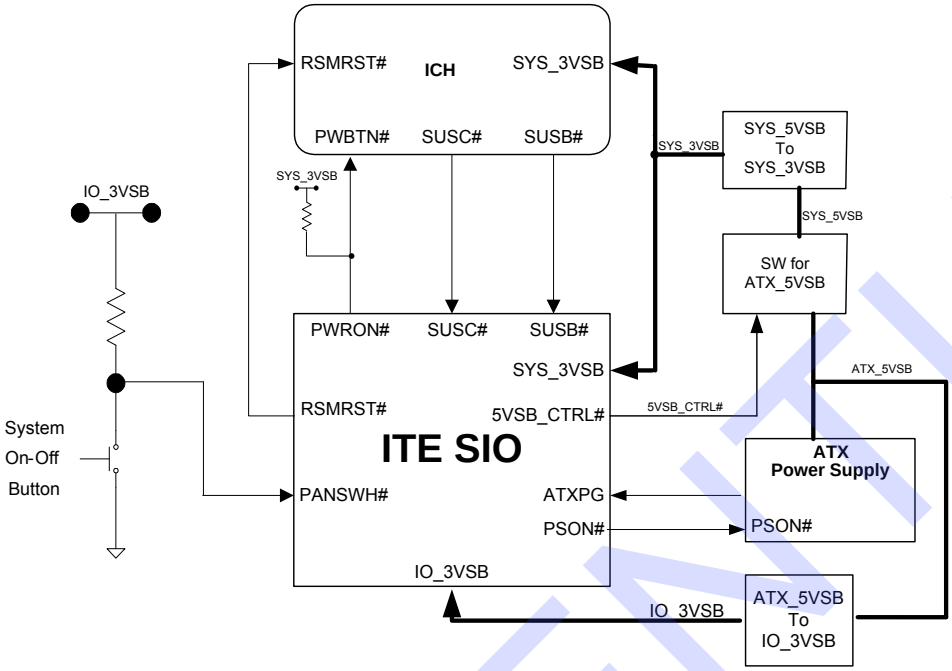

CONFIDENTIAL

8. Configuration

8.1 Configuring Sequence

After a hardware reset or power-on reset, the IT8786E-I enters the normal mode with all logical devices disabled except KBC. The initial state (enable bit) of this logical device (KBC) is ”1”.

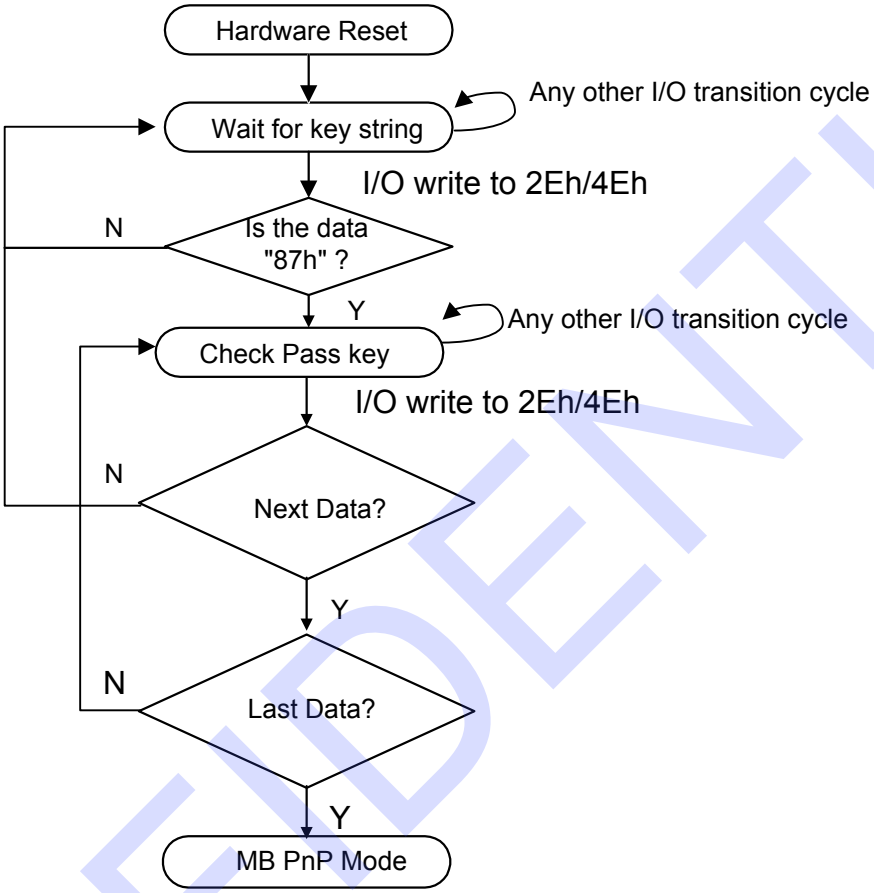

There are three steps below to completing the configuration setup:

(1) Enter MB PnP Mode
(2) Modify data of configuration registers
(3) Exit MB PnP Mode

The undesired result may occur if the MB PnP Mode is not exited properly.

(1) Enter MB PnP Mode

To enter the MB PnP Mode, four special I/O write operations are required to be performed during the Wait for Key state and in order to ensure the initial state of the key-check logic, it is necessary to perform four write operations to the Special Address port (2Eh or 4Eh). Two different enter keys, which are decided by hareware reset strapping, are provided to select configuration ports (2Eh/2Fh or 4Eh/4Fh) of the next step.

		Address Port	Data Port
	87h, 01h, 55h, 55h;	2Eh	2Fh
or	87h, 01h, 55h, AAh;	4Eh	4Fh

CONFIDENTIAL

(2) Modify Data of Configuration Registers

All configuration registers can be accessed after entering the MB PnP Mode. Before accessing a selected register, the content of Index 07h must be changed to the LDN to which the register belongs, except some Global registers.

(3) Exit MB PnP Mode

Set bit 1 of the configure control register (Index=02h) to “1” to exit the MB PnP Mode.

CONFIDENTIAL

8.2 Configuration Registers

All registers except APC/PME registers will be reset to the default state when RESET is activated.

Table 8-1. Global Configuration Registers

LDN	Index	R/W	Reset	Configuration Register or Action
All	02h	W	NA	Configure Control
All	07h	R/W	NA	Logical Device Number (LDN)
All	20h	R	87h	Chip ID Byte 1
All	21h	R	86h	Chip ID Byte 2
All	22h	W-R	07h	Chip Version
All	23h	R/W	40h	Clock Selection Register
All	24h	R/W	00h	MMIO Register
07h Note1	25h	R/W	00h	GPIO Set 1 Multi-Function Pin Selection Register Bit 0 powered by 3VSB.
07h Note1	26h	R/W	F3h	GPIO Set 2 Multi-Function Pin Selection Register Bit 7-0 powered by 3VSB.
07h Note1	27h	R/W	00h	GPIO Set 3 Multi-Function Pin Selection Register
07h Note1	28h	R/W	00h	GPIO Set 4 Multi-Function Pin Selection Register Bit 7-0 powered by 3VSB.
07h Note1	29h	R/W	00h	GPIO Set 5 Multi-Function Pin Selection Register Bit 5-3 powered by 3VSB.
07h Note1	2Ah	R/W	00h	Special Function Selection Register 1 Bit 7-0 powered by 3VSB.
All	2Bh	R/W	48h	Special Function Selection Register 2
07h Note1	2Ch	R/W	89h	Special Function Selection Register 3 Bit 7-0 powered by 3VSB.
07h	2Dh	R/W	00h	Special Function Selection Register 4
F4h Note1	2Eh	R/W	00h	Test 1 Register
F4h Note1	2Fh	R/W	00h	Test 2 Register

Note 1: These registers can be read from all LDNs.

Table 8-2. Serial Port 1 Configuration Registers

LDN	Index	R/W	Reset	Configuration Register or Action
01h	30h	R/W	00h	Serial Port 1 Activate
01h	60h	R/W	03h	Serial Port 1 Base Address MSB Register
01h	61h	R/W	F8h	Serial Port 1 Base Address LSB Register
01h	70h	R/W	04h	Serial Port 1 Interrupt Level Select
01h	F0h	R/W	00h	Serial Port 1 Special Configuration Register 1
01h	F1h	R/W	50h	Serial Port 1 Special Configuration Register 2
01h	F2h	R/W	00h	Serial Port 1 9-Bit Multi-Drops Slave Address

CONFIDENTIAL

Table 8-3. Serial Port 2 Configuration Registers

LDN	Index	R/W	Reset	Configuration Register or Action
02h	30h	R/W	00h	Serial Port 2 Activate
02h	60h	R/W	02h	Serial Port 2 Base Address MSB Register
02h	61h	R/W	F8h	Serial Port 2 Base Address LSB Register
02h	70h	R/W	03h	Serial Port 2 Interrupt Level Select
02h	F0h	R/W	00h	Serial Port 2 Special Configuration Register 1
02h	F1h	R/W	50h	Serial Port 2 Special Configuration Register 2
02h	F2h	R/W	00h	Serial Port 2 9-Bit Multi-Drops Slave Address

Table 8-4. Parallel Port Configuration Registers

LDN	Index	R/W	Reset	Configuration Register or Action
03h	30h	R/W	00h	Parallel Port Activate
03h	60h	R/W	03h	Parallel Port Primary Base Address MSB Register
03h	61h	R/W	78h	Parallel Port Primary Base Address LSB Register
03h	62h	R/W	07h	Parallel Port Secondary Base Address MSB Register
03h	63h	R/W	78h	Parallel Port Secondary Base Address LSB Register
03h	70h	R/W	07h	Parallel Port Interrupt Level Select
03h	74h	R/W	03h	Parallel Port DMA Channel Select [Note2]
03h	F0h	R/W	03h [Note2]	Parallel Port Special Configuration Register

Note 2: When the bit 2 of the Primary Base Address LSB Register of Parallel Port is set to 1, the EPP mode cannot be enabled. Bit 0 of this register is always 0.

Table 8-5. Environment Controller Configuration Registers

LDN	Index	R/W	Reset	Configuration Register or Action
04h	30h	R/W	00h	Environment Controller Activate
04h	60h	R/W	02h	Environment Controller Base Address MSB Register
04h	61h	R/W	90h	Environment Controller Base Address LSB Register
04h	62h	R/W	02h	PME Direct Access Base Address MSB Register
04h	63h	R/W	30h	PME Direct Access Base Address LSB Register
04h	70h	R/W	09h	Environment Controller Interrupt Level Select
04h	F0h	R/W	00h	APC/PME Event Enable Register
04h	F1h	R/W	00h	APC/PME Status Register
04h	F2h	R/W	00h	APC/PME Control Register 1
04h	F3h	R/W	00h	Environment Controller Special Configuration Register
04h	F4h	R-R/W	00h	APC/PME Control Register 2
04h	F5h	R/W	-	APC/PME Special Code Index Register
04h	F6h	R/W	-	APC/PME Special Code Data Register
04h	FAh	R/W	-	Special Configuration Register 1
04h	FBh	R/W	-	Special Configuration Register 2
04h	FCh	R/W	-	Special Configuration Register 3

CONFIDENTIAL

LDN	Index	R/W	Reset	Configuration Register or Action
04h	FDh	R/W	-	Special Configuration Register 4

Table 8-6. KBC(Keyboard) Configuration Registers

LDN	Index	R/W	Reset	Configuration Register or Action
05h	30h	R/W	01h	KBC(Keyboard) Activate
05h	60h	R/W	00h	KBC(Keyboard) Data Base Address MSB Register
05h	61h	R/W	60h	KBC(Keyboard) Data Base Address LSB Register
05h	62h	R/W	00h	KBC(Keyboard) Command Base Address MSB Register
05h	63h	R/W	64h	KBC(Keyboard) Command Base Address LSB Register
05h	70h	R/W	01h	KBC(Keyboard) Interrupt Level Select
05h	71h	R-R/W	02h	KBC(Keyboard) Interrupt Type Note3
05h	F0h	R/W	48h	KBC(Keyboard) Special Configuration Register

Table 8-7. KBC(Mouse) Configuration Registers

LDN	Index	R/W	Reset	Configuration Register or Action
06h	30h	R/W	00h	KBC(Mouse) Activate
06h	70h	R/W	0Ch	KBC(Mouse) Interrupt Level Select
06h	71h	R-R/W	02h	KBC(Mouse) Interrupt Type Note3
06h	F0h	R/W	00h	KBC(Mouse) Special Configuration Register

Note 3: These registers are **read only** unless the write enable bit (Index=F0h) is asserted.

Table 8-8. GPIO Configuration Registers

LDN	Index	R/W	Reset	Configuration Register or Action
07h	60h	R/W	00h	SMI# Normal Run Access Base Address MSB Register
07h	61h	R/W	00h	SMI# Normal Run Access Base Address LSB Register
07h	62h	R/W	00h	Simple I/O Base Address MSB Register
07h	63h	R/W	00h	Simple I/O Base Address LSB Register
07h	70h	R/W	00h	Panel Button De-bounce Interrupt Level Select Register
07h	71h	R/W	00h	Watch Dog Timer Control Register
07h	72h	R/W	20h	Watch Dog Timer Configuration Register
07h	73h	R/W	38h	Watch Dog Timer Time-out Value (LSB) Register
07h	74h	R/W	00h	Watch Dog Timer Time-out Value (MSB) Register
07h	B0h	R/W	00h	GPIO Set 1 Pin Polarity Register
07h	B1h	R/W	00h	GPIO Set 2 Pin Polarity Register
07h	B2h	R/W	00h	GPIO Set 3 Pin Polarity Register
07h	B3h	R/W	00h	GPIO Set 4 Pin Polarity Register
07h	B4h	R/W	00h	GPIO Set 5 Pin Polarity Register
07h	B8h	R/W	20h	GPIO Set 1 Pin Internal Pull-up Enable Register
07h	B9h	R/W	00h	GPIO Set 2 Pin Internal Pull-up Enable Register
07h	BAh	R/W	00h	GPIO Set 3 Pin Internal Pull-up Enable Register

CONFIDENTIAL

LDN	Index	R/W	Reset	Configuration Register or Action
07h	BBh	R/W	00h	GPIO Set 4 Pin Internal Pull-up Enable Register
07h	BCh	R/W	00h	GPIO Set 5 Pin Internal Pull-up Enable Register
07h	BDh	R/W	00h	GPIO Set 6 Pin Internal Pull-up Enable Register
07h	C0h	R/W	01h	Simple I/O Set 1 Enable Register Bit 0 powered by 3VSB.
07h	C1h	R/W	00h	Simple I/O Set 2 Enable Register Bit 7-0 powered by 3VSB.
07h	C2h	R/W	00h	Simple I/O Set 3 Enable Register
07h	C3h	R/W	40h	Simple I/O Set 4 Enable Register Bit 7-0 powered by 3VSB.
07h	C4h	R/W	00h	Simple I/O Set 5 Enable Register Bit 7-0 powered by 3VSB.
07h	C8h	R/W	01h	Simple I/O Set 1 Output Enable Register
07h	C9h	R/W	00h	Simple I/O Set 2 Output Enable Register
07h	CAh	R/W	00h	Simple I/O Set 3 Output Enable Register
07h	CBh	R/W	40h	Simple I/O Set 4 Output Enable Register Bit 7-0 powered by 3VSB.
07h	CCh	R/W	00h	Simple I/O Set 5 Output Enable Register Bit 7-0 powered by 3VSB.
07h	CDh	R/W	00h	Simple I/O Set 6 Output Enable Register Bit 7-0 powered by 3VSB.
07h	CEh	R/W	00h	Simple I/O Set 7 Output Enable Register Bit 7-0 powered by 3VSB.
07h	CFh	R/W	00h	Simple I/O Set 8 Output Enable Register Bit 7-0 powered by 3VSB.
07h	D1h	R/W	00h	GPIO Set 9 Polarity Register
07h	D2h	R/W	00h	Simple I/O Set 9 Output Enable Register
07h	D3h	R/W	00h	Simple I/O Set 9 Enable Register
07h	D4h	R/W	00h	GPIO Set 9 Pin Internal Pull-up Enable Register
07h	D6h	R/W	00h	GPIO Set A Polarity Register
07h	D7h	R/W	00h	Simple I/O Set A Output Enable Register
07h	D8h	R/W	00h	Simple I/O Set A Enable Register
07h	D9h	R/W	00h	GPIO Set A Pin Internal Pull-up Enable Register
07h	E0h	R/W	00h	Panel Button De-bounce 0 Input Pin Mapping Register
07h	E1h	R/W	00h	Panel Button De-bounce 1 Input Pin Mapping Register
07h	E2h	R/W	00h	IRQ External Routing 0 Input Pin Mapping Register
07h	E3h	R/W	00h	IRQ External Routing 1 Input Pin Mapping Register
07h	E4h	R/W	00h	IRQ External Routing 1-0 Interrupt Level Selection Registers

CONFIDENTIAL

LDN	Index	R/W	Reset	Configuration Register or Action
07h	E7h	R/W	00h	APOLLO LAKE/GEMINI LAKE Power Sequence Control Registers
07h	F0h	R/W	00h	SMI# Control Register 1
07h	F1h	R/W	00h	SMI# Control Register 2
07h	F2h	R/W	00h	SMI# Status Register 1
07h	F3h	R/W	00h	SMI# Status Register 2
07h	F4h	R/W	00h	SMI# Pin Mapping Register
07h	F5h	R/W	00h	Hardware Monitor Thermal Output Pin Mapping Register Bit 7-0 powered by 3VSB.
07h	F6h	R/W	00h	Hardware Monitor Alert Beep Pin Mapping Register
07h	F7h	R/W	00h	Keyboard Lock Pin Mapping Register
07h	F8h	R/W	00h	GP LED Blinking 1 Pin Mapping Register Bit 7-0 powered by 3VSB.
07h	F9h	R/W	00h	GP LED Blinking 1 Control Register Bit 7-0 powered by 3VSB.
07h	FAh	R/W	00h	GP LED Blinking 2 Pin Mapping Register Bit 7-0 powered by 3VSB.
07h	FBh	R/W	00h	GP LED Blinking 2 Control Register Bit 7-0 powered by 3VSB.

Table 8-9. Serial Port 3 Configuration Registers

LDN	Index	R/W	Reset	Configuration Register or Action
08h	30h	R/W	00h	Serial Port 3 Activate
08h	60h	R/W	03h	Serial Port 3 Base Address MSB Register
08h	61h	R/W	F8h	Serial Port 3 Base Address LSB Register
08h	70h	R/W	0Bh	Serial Port 3 Interrupt Level Select
08h	F0h	R/W	00h	Serial Port 3 Special Configuration Register 1
08h	F1h	R/W	50h	Serial Port 3 Special Configuration Register 2
08h	F2h	R/W	00h	Serial Port 3 9-Bit Multi-Drops Slave Address

Table 8-10. Serial Port 4 Configuration Registers

LDN	Index	R/W	Reset	Configuration Register or Action
09h	30h	R/W	00h	Serial Port 4 Activate
09h	60h	R/W	02h	Serial Port 4 Base Address MSB Register
09h	61h	R/W	F8h	Serial Port 4 Base Address LSB Register
09h	70h	R/W	0Ah	Serial Port 4 Interrupt Level Select
09h	F0h	R/W	00h	Serial Port 4 Special Configuration Register 1
09h	F1h	R/W	50h	Serial Port 4 Special Configuration Register 2
09h	F2h	R/W	00h	Serial Port 4 9-Bit Multi-Drops Slave Address

CONFIDENTIAL

Table 8-11. Consumer IR Configuration Registers

LDN	Index	R/W	Reset	Configuration Register or Action
0Ah	30h	R/W	00h	Consumer IR Activate
0Ah	60h	R/W	03h	Consumer IR Base Address MSB Register
0Ah	61h	R/W	10h	Consumer IR Base Address LSB Register
0Ah	70h	R/W	0Bh	Consumer IR Interrupt Level Select
0Ah	F0h	R/W	06h	Consumer IR Special Configuration Register

Table 8-12. Serial Port 5 Configuration Registers

LDN	Index	R/W	Reset	Configuration Register or Action
0Bh	30h	R/W	00h	Serial Port 5 Activate
0Bh	60h	R/W	03h	Serial Port 5 Base Address MSB Register
0Bh	61h	R/W	F8h	Serial Port 5 Base Address LSB Register
0Bh	70h	R/W	04h	Serial Port 5 Interrupt Level Select
0Bh	F0h	R/W	00h	Serial Port 5 Special Configuration Register 1
0Bh	F1h	R/W	50h	Serial Port 5 Special Configuration Register 2
0Bh	F2h	R/W	00h	Serial Port 5 9-Bit Multi-Drops Slave Address

Table 8-13. Serial Port 6 Configuration Registers

LDN	Index	R/W	Reset	Configuration Register or Action
0Ch	30h	R/W	00h	Serial Port 6 Activate
0Ch	60h	R/W	02h	Serial Port 6 Base Address MSB Register
0Ch	61h	R/W	F8h	Serial Port 6 Base Address LSB Register
0Ch	70h	R/W	03h	Serial Port 6 Interrupt Level Select
0Ch	F0h	R/W	00h	Serial Port 6 Special Configuration Register 1
0Ch	F1h	R/W	50h	Serial Port 6 Special Configuration Register 2
0Ch	F2h	R/W	00h	Serial Port 6 9-Bit Multi-Drops Slave Address

CONFIDENTIAL

8.2.2 Logical Device Base Address

The base I/O range of logical devices shown below is located in the base I/O address range of each logical device.

Table 8-14. Base Address of Logical Devices

Logical Devices	Address	Notes
LDN=1 SERIAL PORT 1	Base + (0 -7)	COM port
LDN=2 SERIAL PORT 2	Base + (0 -7)	COM port
LDN=3 PARALLEL PORT	Base1 + (0 -3) Base1 + (0 -7) Base1 + (0 -3) and Base2 + (0 -3) Base1 + (0 -7) and Base2 + (0 -3) Base3	SPP SPP+EPP SPP+ECP SPP+EPP+ECP POST data port
LDN=4 Environment Controller	Base1 + (0 -7) Base2 + (0 -3)	Environment Controller PME#
LDN=5 KBC	Base1 + Base2	KBC
LDN=8 SERIAL PORT 3	Base + (0 -7)	COM port
LDN=9 SERIAL PORT 4	Base + (0 -7)	COM port
LDN=A Consumer IR	Base + (0 -7)	CIR
LDN=B SERIAL PORT 5	Base + (0 -7)	COM port
LDN=C SERIAL PORT 6	Base + (0 -7)	COM port

CONFIDENTIAL

8.3 Global Configuration Registers (LDN: All)

8.3.1 Configure Control (Index=02h)

This register is **write only**. Its values are not sticky; that is to say, a hardware reset will automatically clear the bits, and the software is not required to clear them.

Bit	Description
7-2	**Reserved**
1	Returns to the "Wait for Key" state. This bit is used when the configuration sequence is completed.
0	Resets all logical devices and restores configuration registers to their power-on states.

8.3.2 Logical Device Number (LDN, Index=07h)

This register is, **read/write,** which is to select the current logical devices. By reading data from or writing data to the configuration of I/O, Interrupt, DMA and other special functions, all registers of the logical devices can be accessed. In addition, ACTIVATE command is only effective for the selected logical devices.

8.3.3 Chip ID Byte 1 (Index=20h, Default=87h)

This register is Chip ID Byte 1 and **read only**. Bits [7:0]=87h when read.

8.3.4 Chip ID Byte 2 (Index=21h, Default=86h)

This register is Chip ID Byte 2 and **read only**. Bits [7:0]=86h when read.

8.3.5 Chip Version (Index=22h, Default=07h)

Bit	Description
7-4	**Reserved**
3-0	**Version** 000b for AX 001b for BX 010b for CX 011b for DX 100b for EX 101b for FX 110b for GX 111b for HX The part no. is IT8786E-I/HX.

8.3.6 Clock Selection Register (Index=23h, Default=40h)

Bit	Description
7	**Reserved**
6	**VCC_OK Detect Select** 0: Internal VCC_OK (AVCC3 = 2.6V typical) 1: PSON# rising (Default) Note: This register is kept by 3VSB.
5	**Reserved**
4	**Clock Source Select of Watch Dog Timer** 0: Internal oscillating clock (Default) 1: Internal DPLL CLK

CONFIDENTIAL

Bit	Description
3	**Reserved; must be 0b**
2	**PWRGD3 Timing Selection** 0: 150ms 1: 300ms
1	**KB/MS Software Swap Enable** 0: Disable (Default) 1: Enable To disable, LDN4 IndexF4h<bit7> must be set to “1b”.
0	**CLKIN Frequency** 0: 48 MHz (Default) 1: 24 MHz

8.3.7 EC MMIO (Index=24h, Default=00h)

Bit	Description
7-6	**EC HWM MMIO Offset (ECMMIO_OFFSET)** 00: ECMMIO_BAR + 00_0000h (Default) 01: ECMMIO_BAR + 10_0000h 10: ECMMIO_BAR + 20_0000h 11: ECMMIO_BAR + 30_0000h ECMMIO_BAR determined by GBL\Index 24h[bit 3-0] **Note:** EC Bank Select: addr [bit 9-8] Bank-0: addr[9-8] = 00b, ex: FD00_0000h Bank-1: addr[9-8] = 01b, ex: FD00_0100h Bank-2: addr[9-8] = 10b, ex: FD00_0200h Bank-3: addr[9-8] = 11b, ex: FD00_0300h
5	**EC HWM MMIO Enable** 0: Disable (Default) 1: Enable
4	**Lock MMIO Access HWM** 0: Disable (Default) 1: Enable
3-0	**EC HWM MMIO Base Address (ECMMIO_BAR)** Decode base address = FX00_0000h, ‘X’ is controlled by bit 3-0. (Default= F000_0000h)

8.3.8 GPIO Set 1 Multi-Function Pin Selection Register (Index=25h, Default=00h)

If the enabled bits are not set, the multi-function pins will perform the original functions. Conversely, if they are set, they will perform the GPIO functions. This register can be read from any LDN, but can only be written if LDN=07h.

Bit	Description
7	**Function Selection of Pin 14** 0: RI2# (Default) 1: GP17
6	**Function Selection of Pin 127** 0: FAN_CTL5 if bits[3:2] of EC index 0Bh ≠ 11b or DTR6# (Default) 1: GP16
5	**Function Selection of Pin 128** 0: RI6# or FAN_TAC5 (Default) 1: GP15

CONFIDENTIAL

Bit	Description
4	**Function Selection of Pin 22** 0: RI3# (Default) 1: GP14
3	**Function Selection of Pin 23** 0: CTS3# (Default) 1: GP13
2	**Function Selection of Pin 30** 0: PCIRST1# or PCH_D1 if bit3 of index 2A is 1 (default) 1: GP12
1	**Function Selection of Pin 59** 0: DTR5# (Default) 1: GP11
0	**Function Selection of Pin 81** 0: SLP_S0# / CIRRX1 (Default) 1: GP10

8.3.9 GPIO Set 2 Multi-Function Pin Selection Register (Index=26h, Default=F3h)

If the enabled bits are not set, the multi-function pins will perform the original functions. Conversely, if they are set, they will perform the GPIO functions. This register can be read from any LDN, but can only be written if LDN=07h.

Bit	Description
7	**Function Selection of Pin 126** 0: SIN6 1: GP27 (Default)
6	**Function Selection of Pin 60** 0: RTS5# 1: GPO26 (Default)
5	**Function Selection of Pin 18** 0: DSR2# 1: GP25 (Default)
4	**Function Selection of Pin 17** 0: RTS2# 1: GP24 (Default)
3	**Function Selection of Pin 8** 0: DPWROK# / FAN_TAC4 1: GP23
2	**Function Selection of Pin 62** 0: SOUT5# (Default) 1: GPO22
1	**Function Selection of Pin 13** 0: DCD2# 1: GP21 (Default)
0	**Function Selection of Pin 15** 0: CTS2# 1: GP20 (Default)

8.3.10 GPIO Set 3 Multi-Function Pin Selection Register (Index=27h, Default=00h)

If the enabled bits are not set, the multi-function pins will perform the original functions. Conversely, if they are set, they will perform the GPIO functions. This register can be read from any LDN, but can only be written if LDN=07h.

CONFIDENTIAL

CONFIDENTIAL

Bit	Description
7	**Function Selection of Pin 6** 0: FAN_TAC3 (Default) 1: GP37
6	**Function Selection of Pin 7** 0: FAN_CTL3 (Default) 1: GP36
5	**Function Selection of Pin 67** 0: SIN5 if COM5 enabled (Default) 1: GP35
4	**Function Selection of Pin 26** 0: DSR3# if COM3 enabled (Default) 1: GP34
3	**Function Selection of Pin 114** 0: CTS6# if COM6 enabled (Default) 1: GP33
2	**Function Selection of Pin 117** 0: SOUT6 if COM6 enabled (Default) 1: GP32
1	**Function Selection of Pin 120** 0: CTS1# if COM1 enabled (Default) 1: GP31
0	**Function Selection of Pin 12** 0: ATXPG (Default) 1: GP30

8.3.11 GPIO Set 4 Multi-Function Pin Selection Register (Index=28h, Default=00h)

If the enabled bits are not set, the multi-function pins will perform the original functions. Conversely, if they are set, they will perform the GPIO functions. This register can be read from any LDN, but can only be written if LDN=07h.

Bit	Description
7	**Function Selection of Pin 116** 0: DSR6 if COM6 enabled (Default) 1: GP47
6	**Function Selection of Pin 61** 0: DSR5# if COM5 enabled or CIRRX2 if EC bit0 of index F2 is 1.(Default) **1: GP46**
5	**Function Selection of Pin 123** 0: DSR1# (Default) 1: GP45
4	**Function Selection of Pin 69** 0: PWRON# (Default) 1: GP44
3	**Function Selection of Pin 72** 0: PANSWH# (Default) 1: GP43
2	**Function Selection of Pin 73** 0: PSON# (Default) 1: GP42

CONFIDENTIAL

Bit	Description
1	**Function Selection of Pin 56** 0: DCD5# if COM5 enabled or SMB_SL_C1 if EC bit2 of index F3 is 1 (Default) 1: GP41
0	**Function Selection of Pin 76** 0: 3VSBSW# if bit7 of index 2A is 1 or SMB_SL_C0 if EC bit1 of index F3 is 1 (Default) 1: GP40

8.3.12 GPIO Set 5 Multi-Function Pin Selection Register (Index=29h, Default=00h)

If the enabled bits are not set, the multi-function pins will perform the original functions. Conversely, if they are set, they will perform the GPIO functions. This register can be read from any LDN, but can only be written if LDN=07h.

Bit	Description
7	**Function Selection of Pin 80, 79** 0: MCLK, MDAT 1: GP56, GP57
6	**Function Selection of Pin 78, 77, 42** 0: KCLK, KDAT, KRST# (Default) 1: GP60, GP61, GP62
5	**Function Selection of Pin 82** 0: RSMRST# (Default) 1: GP55
4	**Function Selection of Pin 70** 0: PME# or CLKRUN# if bit0 of index 2D is 1 (Default) 1: GP54
3	**Function Selection of Pin 74** 0: SUSC# (Default) 1: GP53
2	**Function Selection of Pin 4** 0: FAN_TAC2 (Default) 1: GP52
1	**Function Selection of Pin 5** 0: FAN_CTL2 (Default) 1: GP51
0	**Function Selection of Pin 115** 0: RTS6# (Default) 1: GP50

8.3.13 Special Function Selection Register 1 (Index=2Ah, Default=00h)

This register can be read from any LDN, but can only be written if LDN=07h.

Bit	Description
7	**Enable 3VSBSW# (For System Suspend-to-RAM)** 0: 3VSBSW# is always inactive. (Default) 1: 3VSBSW# is enabled. It will be (NOT SUSB#) NAND SUSC#.

CONFIDENTIAL

Bit	Description
6	**Multi-Function Selection of Pin 47** 0: Reserved. (Default) 1: External Thermal Sensor Data Specifically when External Thermal Sensor Host is enabled (bit 6-4 of EC Index 0Ah), the function of this pin is selected as ETS_DAT.
5	**Reserved**
4	**Delay PCIRST1# to 1ms** 0: Disable (Default) 1: Enable
3	**PCH SM-Link Data Pin Selection** 0: Pin 10 (Default) 1: Pin 30
2	**PCH SM-Link Clock Pin Selection** 0: Pin 11 if EC bit3 of index F3 is 1 (Default) 1: Pin 57 if EC bit4 of index F3 is 1
1	**Reserved**
0	**Delay Time Selection of 3VSBSW# Rising Edge to PWRGD3 Rising Edge**

8.3.14 Special Function Selection Register 2 (Index=2Bh, Default=48h)

Bit	Description
7-3	**Reserved**
2-0	**PANSWH# Mask Time** 000: 0 second (Default) 001: 1 second 010: 2 seconds 011: 3 seconds 100: 4 seconds

8.3.15 Special Function Selection Register 3 (Index=2Ch, Default=89h)

This register can be read from any LDN, but can only be written if LDN=07h.

Bit	Description
7-5	**Reserved**
4	**PS2 Mouse Double Click Wake-up Mode Selection** 0: 3-Byte mode (Default) 1: 4-Byte mode
3-1	**Reserved**
0	**VIN3 Function Selection** 0: External VIN3 voltage sensor 1: Internal Voltage Divider for ACC3. (Default)

8.3.16 Special Function Selection Register 4 (Index=2Dh, Default=00h)

This register can be read from any LDN, but can only be written if LDN=07h.

Bit	Description
7-1	**Reserved**
0	**CLKRUN# Enable** 0: Disable 1: Enable

CONFIDENTIAL

8.3.17 Test 1 Register (Index=2Eh, Default=00h)

This register is reserved for ITE and should not be set.

8.3.18 Test 2 Register (Index=2Fh, Default=00h)

This register is reserved for ITE and should not be set.

CONFIDENTIAL

8.4 Serial Port 1 Configuration Registers (LDN=01h)

8.4.1 Serial Port 1 Activate (Index=30h, Default=00h)

Bit	Description
7-1	**Reserved**
0	**Serial Port 1 Enable** 1: Enable 0: Disable

8.4.2 Serial Port 1 Base Address MSB Register (Index=60h, Default=03h)

Bit	Description
7-4	**Read only** as “0h” for Base Address[15:12]
3-0	**Read/write**, mapped as Base Address[11:8]

8.4.3 Serial Port 1 Base Address LSB Register (Index=61h, Default=F8h)

Bit	Description
7-3	**Read/write**, mapped as Base Address[7:3]
2-0	**Read only** as “000b”

8.4.4 Serial Port 1 Interrupt Level Select (Index=70h, Default=04h)

Bit	Description
7-4	**Reserved** with default “0h”
3-0	**Interrupt Select Level for Serial Port 1** Please refer to Table 8-15. Interrupt Level Mapping Table.

CONFIDENTIAL

8.4.5 Serial Port 1 Special Configuration Register 1 (Index=F0h, Default=00h)

Bit	Description
7	**RS485 Mode** 1: Enable 0: Disable
6	**RTS# Polarity (for RS 485 Mode Only)** 0: Normal 1: Inverted
5	**UART1 Port80 Enable (U1P80EN)** 1: IO80_OUT1 enabled 0: Disable (Default) **Note:** The output pin of this function is SOUT1.
4	**Reserved**
3	**9-Bit Multi-Drops Mode** 1: Enable 0: Disable
2-1	**Clock Source** 00: 24 MHz/13 (Standard) 01: 24 MHz/12 10: 24 MHz/1 11: 24 MHz/1.625
0	**IRQ Type** 1: IRQ sharing 0: Normal

8.4.6 Serial Port 1 Interrupt Type Register (Index=F1h, Default=50h)

Bit	Description
7-2	**Reserved**
1	1: Low level 0: High level
0	1: Edge type 0: Level type

8.4.7 Serial Port 1 9-Bit Multi-Drops Slave Address Register (Index=F2h, Default=00h)

Bit	Description
7-0	**9-Bit Multi-Drops Slave Address Register**

CONFIDENTIAL

8.5 Serial Port 2 Configuration Registers (LDN=02h)

8.5.1 Serial Port 2 Activate (Index=30h, Default=00h)

Bit	Description
7-1	**Reserved**
0	**Serial Port 2 Enable** 1: Enable 0: Disable

8.5.2 Serial Port 2 Base Address MSB Register (Index=60h, Default=02h)

Bit	Description
7-4	**Read only** with "0h" for Base Address [15:12]
3-0	**Read/write**, mapped as Base Address [11:8]

8.5.3 Serial Port 2 Base Address LSB Register (Index=61h, Default=F8h)

Bit	Description
7-3	**Read/write**, mapped as Base Address [7:3]
2-0	**Read only** as "000b"

8.5.4 Serial Port 2 Interrupt Level Select (Index=70h, Default=03h)

Bit	Description
7-4	**Reserved** with default "0h"
3-0	**Interrupt Level Select for Serial Port 2** Please refer to Table 8-15. Interrupt Level Mapping Table.

8.5.5 Serial Port 2 Special Configuration Register 1 (Index=F0h, Default=00h)

Bit	Description
7	**RS485 Mode** 1: Enable 0: Disable
6	**RTS# Polarity (for RS 485 Only)** 0: Normal 1: Inverted
5	**UART2 Port80 Enable (U2P80EN)** 1: IO80_OUT2 enabled 0: Disable (Default) **Note:** The output pin of this function is SOUT2.
4	**Reserved**
3	**9-Bit Multi-Drops Mode** 1: Enable 0: Disable
2-1	**Clock Source** 00: 24 MHz/13 (Standard) 01: 24 MHz/12 10: 24 MHz/1 11: 24 MHz/1.625
0	**IRQ Type** 1: IRQ sharing

CONFIDENTIAL

Bit	Description
	0: Normal

8.5.6 Serial Port 2 Interrupt Type Register (Index=F1h, Default=50h)

Bit	Description
7-2	**Reserved**
1	1: Low level 0: High level
0	1: Edge type 0: Level type

8.5.7 Serial Port 2 9-Bit Multi-Drops Slave Address Register (Index=F2h, Default=00h)

Bit	Description
7-0	**9-Bit Multi-Drops Slave Address Register**

CONFIDENTIAL

8.6 Parallel Port Configuration Registers (LDN=03h)

8.6.1 Parallel Port Activate (Index=30h, Default=00h)

Bit	Description
7-1	**Reserved**
0	**Parallel Port Enable** 1: Enable 0: Disable **Note:** Bus selection and SMBus isolation must be disabled when this function is enabled.

8.6.2 Parallel Port Primary Base Address MSB Register (Index=60h, Default=03h)

Bit	Description
7-4	**Read only** as “0h” for Base Address[15:12]
3-0	**Read/write**, mapped as Base Address[11:8]

8.6.3 Parallel Port Primary Base Address LSB Register (Index=61h, Default=78h)

If bit 2 is set to 1, the EPP mode is disabled automatically.

Bit	Description
7-2	**Read/write**, mapped as Base Address[7:2]
1-0	**Read only** as “00b”

8.6.4 Parallel Port Secondary Base Address MSB Register (Index=62h, Default=07h)

Bit	Description
7-4	**Read only** as “0h” for Base Address[15:12]
3-0	**Read/write**, mapped as Base Address[11:8]

8.6.5 Parallel Port Secondary Base Address LSB Register (Index=63h, Default=78h)

Bit	Description
7-2	**Read/write**, mapped as Base Address[7:2]
1-0	**Read only** as “00b”

8.6.6 Parallel Port Interrupt Level Select (Index =70h, Default=07h)

Bit	Description
7-4	**Reserved** with default “0h”
3-0	**Interrupt Level Select for Parallel Port** Please refer to Table 8-15. Interrupt Level Mapping Table.

8.6.7 Parallel Port DMA Channel Select (Index=74h, Default=03h)

Bit	Description
7-3	**Reserved** with default “00h”
2-0	**DMA Channel Select for Parallel Port** Please refer to Table 8-16. DMA Channel Mapping Table on page 83.

CONFIDENTIAL

8.6.8 Parallel Port Special Configuration Register (Index=F0h, Default=0Bh)

Bit	Description
7-6	**Port-80 Output Selection** 00: Normal Port-80 (for 7-Seg decod data) 01: EC Index 29h Reading 10: EC Index 2Ah Reading 11: EC Index 2Bh Reading
5-4	**Reserved**
3	**Port-80 Function** 1: Disable 0: Enable
2	**IRQ Type** 1: IRQ sharing 0: Normal
1-0	**Parallel Port Modes** 00 : Standard Parallel Port mode (SPP) 01 : EPP mode 10 : ECP mode 11 : EPP mode & ECP mode These bits are independent. If bit 1 is set, ECP mode is enabled. If bit 0 is set, EPP mode is enabled except when bit 2 of Parallel Port Primary Base Address LSB Register is set to 1 in accordance with the EPP specification.

CONFIDENTIAL

8.7 Environment Controller Configuration Registers (LDN=04h)

8.7.1 Environment Controller Activate (Index=30h, Default=00h)

Bit	Description
7-1	**Reserved**
0	**Environment Controller Enable** 1: Enable 0: Disable This is a read/write register.

8.7.2 Environment Controller Base Address MSB Register (Index=60h, Default=02h)

Bit	Description
7-4	**Read only** as “0h” for Base Address[15:12]
3-0	**Read/write**, mapped as Base Address[11:8]

8.7.3 Environment Controller Base Address LSB Register (Index=61h, Default=90h)

Bit	Description
7-3	**Read/write**, mapped as Base Address[7:3]
2-0	**Read only** as “000b”

8.7.4 PME Direct Access Base Address MSB Register (Index=62h, Default=02h)

Bit	Description
7-4	**Read only** as “0h” for Base Address[15:12]
3-0	**Read/write**, mapped as Base Address[11:8]

8.7.5 PME Direct Access Base Address LSB Register (Index=63h, Default=30h)

Bit	Description
7-3	**Read/write**, mapped as Base Address[7:3]
2-0	**Read only** as “000b.”

8.7.6 Environment Controller Interrupt Level Select (Index=70h, Default=09h)

Bit	Description
7-4	**Reserved** with default “0h”
3-0	**Interrupt Level Select for Environment Controller** Please refer to Table 8-15. Interrupt Level Mapping Table on page 83.

8.7.7 APC/PME Event Enable Register (PER) (Index=F0h, Default=00h)

Bit	Description

CONFIDENTIAL

Bit	Description
7	This bit is set to 1 when 3VSB is off and becomes ineffective if 0 is written to it. Write 1 to clear this bit.
6	**RI6# Wake-up Event** 0: Disable 1: Enable
5	**RI5# Wake-up Event** 0: Disable 1: Enable
4	**PS/2 Mouse Event** 0: Disable 1: Enable
3	**Keyboard Event** 0: Disable 1: Enable
2-1	**Reserved**
0	**CIR Event** 0: Disable 1: Enable

8.7.8 APC/PME Status Register (PSR) (Index=F1h, Default=00h)

Bit	Description
7	This bit is set to 1 when AVCC3 is on at the previous AC power failure whereas 0 when AVCC3 is off.
6-5	**Reserved**
4	0: No PS/2 mouse event detected 1: PS/2 mouse event detected
3	0: No keyboard event detected 1: Keyboard event detected
2-1	**Reserved**
0	0: No CIR event detected 1: CIR event detected

8.7.9 APC/PME Control Register 1 (PCR 1) (Index=F2h, Default=00h)

Bit	Description

CONFIDENTIAL

Bit	Description
7	**PER and PSR Normal Run Access Enable**
6	**PME# Output Control** 0: Enable 1: Disable
5	This bit is restored automatically to the previous AVCC3 state before the power failure occurs. **Note:** AC failure resume can be made by either IO or South Bridge. For the use of IO, the BIOS needs to be set as the following: LDN4 F4<5> and LDN4 F2<5> setting: 1 X :Always ON 0 1 :Memory 0 0 :Always OFF For the use of South Bridge, F4 bit 5 and F4 bit 6 need to be set to 1.
4	**Reserved**
3	**Keyboard event mode selection when AVCC3 is on** 1: Determined by PCR 2 0: Pulse falling edge on KCLK
2	**Mouse event when AVCC3 is off** 1: Determined by LDN4\FBh<6-4> 0: Pulse falling edge on MCLK
1	**Mouse event when AVCC3 is on** 1: Click key twice sequentially 0: Pulse falling edge on MCLK
0	**CIRRX Pin Selection** 1: Pin 61 0: Pin 81

8.7.10 Environment Controller Special Configuration Register (Index=F3h, Default=00h)

Bit	Description
7-6	**Reserved**
5	**Reserved; must be 0b**
4	**PCH SM-LINK Clock 1 Pin (Pin 57:PCH_C1)** 0: Disable (Default) 1: Enable
3	**PCH SM-LINK Clock 0 Pin (Pin 11:PCH_C0)** 0: Disable (Default) 1: Enable
2	**SMBUS Slave 1 Enable (Pin 56:SMCLK/Pin 49:SMDAT)** 0: Disable.(Default) 1: Enable
1	**SMBUS Slave 0 Enable (Pin 76:SMCLK/ Pin75:SMDAT)** 0: Disable.(Default) 1: Enable
0	**IRQ Type** 1: IRQ sharing 0: Normal

8.7.11 APC/PME Control Register 2 (PCR 2) (Index=F4h, Default=00h)

Bit	Description

CONFIDENTIAL

Bit	Description
7	**Auto-swap of KCLK/KDAT and MCLK/MDAT** 0: Enable (Default) 1: Disable
6	**Gate Extra PWRON# Pulse at First 3VSB Power-on** 0: Not gating (Default) 1: Gating **Note:** AC failure resume can be made by either IO or South Bridge. For the use of IO, the BIOS needs to be set as the following: LDN4 F4<5> and LDN4 F2<5> setting: 1 X :Always ON 0 1 :Memory 0 0 :Always OFF For the use of South Bridge, F4 bit 5 and F4 bit 6 need to be set to 1.
5	**PSON# state when 3VSB is switched from off to on** 0: High-Z (power OFF in default) 1: Inverting of SUSB#
4	**RSMRST# Rising to PWRON# Pulse Timing Select** 0: Delay 200ms (Default) 1: Delay 400ms
3-2	**Key Number of Keyboard Power-up Event** 00: 5 Key string mode, 3 keys simultaneous mode 01: 4 Key string mode, 2 keys simultaneous mode 10: 3 Key string mode, 1 key simultaneous mode 11: 2 Key string mode, Reserved (Not valid for simultaneous mode)
1-0	**Mode Selection of Keyboard Power-up Event** 00: KCLK falling edge 01: Key string mode 10: Simultaneous key stroke mode 11: Reserved

8.7.12 APC/PME Special Code Index Register (Index=F5h)

Bit	Description
7-6	**Reserved (should be "00")**
5-0	**Indicate which Identification Key Code or CIR code register to be read/written via 0xF6** 00h~04h: Key code 20h~32h: CIR code 34h~37h: VBAT registers 38h~3Eh: VBAT registers

8.7.13 APC/PME Special Code Data Register (Index=F6h)

There are 5 bytes for the Key String mode, 3 bytes for Stroke Keys at the same time mode and CIR event codes.

8.7.14 Special Configuration Register 1 (Index=FAh)

Bit	Description

CONFIDENTIAL

Bit	Description
7	**RI4# Wake-up Event** 0: Disable 1: Enable
6	**RI3# Wake-up Event** 0: Disable 1: Enable
5	**WDT Output through PWRGD Enable** 1: Enable 0: Disable
4	**EuP Wake-up Event** 0: Disable 1: Enable
3	**RI2# Wake-up Event** 0: Disable 1: Enable
2	**RI1# Wake-up Event** 0: Disable 1: Enable
1	**5VSB_CTRL#** 0: Disable 1: Enable
0	**5VSB_SEN Enable** 0: Disable 1: Enable

8.7.15 Special Configuration Register 2 (Index=FBh)

Bit	Description
7	**RSMRST# Timing Select** 0: 75ms 1: 300ms
6-4	**PS/2 Mouse Wake-up Event Selection** 000: Double click on any button. 001: Single click on the left button. 010: Single click on the right button. 011: Single click on the left or right button. 101: Double click on the left button. 110: Double click on the right button. Others: Reserved.
3	**RI2# Wake-up Event Status** 0: No RI2# event detected 1: RI2# event detected
2	**RI1# Wake-up Event Status** 0: No RI1# event detected 1: RI1# event detected
1-0	**Resume Timing from AC Fail Resume** 00: 2 seconds 01: 4 seconds 10: 8 seconds 11: 12 seconds

CONFIDENTIAL

8.7.16 Special Configuration Register 3 (Index=FCh)

Bit	Description
7-4	**Reserved**
3	**RI6# Wake-up Event Status** 0: No RI6# event detected 1: RI6# event detected
2	**RI5# Wake-up Event Status** 0: No RI5# event detected 1: RI5# event detected
1	**RI4# Wake-up Event Status** 0: No RI4# event detected 1: RI4# event detected
0	**RI3# Wake-up Event Status** 0: No RI3# event detected 1: RI3# event detected

8.7.17 Special Configuration Register 4 (Index=FDh)

Bit	Description
7-3	**Reserved**
2-0	**RSMRST# Rising to PWRON# Pulse Timing Select** 000: No delay (Default) 001: 100ms 010: 200ms 011: 400ms 100: 800ms 101: 1S 110: 1.6S 111: 2S

CONFIDENTIAL

8.8 KBC(Keyboard) Configuration Registers (LDN=05h)

8.8.1 KBC(Keyboard) Activate (Index=30h, Default=01h)

Bit	Description
7-1	**Reserved**
0	**KBC(Keyboard) Enable** 1: Enable 0: Disable

8.8.2 KBC(Keyboard) Data Base Address MSB Register (Index=60h, Default=00h)

Bit	Description
7-4	**Read only** as "0h" for Base Address [15:12]
3-0	**Read/write,** mapped as Base Address [11:8]

8.8.3 KBC(Keyboard) Data Base Address LSB Register (Index=61h, Default=60h)

Bit	Description
7-0	**Read/write**, mapped as Base Address[7:0]

8.8.4 KBC(Keyboard) Command Base Address MSB Register (Index=62h, Default=00h)

Bit	Description
7-4	**Read only** as "0h" for Base Address[15:12]
3-0	**Read/write**, mapped as Base Address[11:8]

8.8.5 KBC(Keyboard) Command Base Address LSB Register (Index=63h, Default=64h)

Bit	Description
7-0	**Read/write**, mapped as Base Address[7:0]

8.8.6 KBC(Keyboard) Interrupt Level Select (Index=70h, Default=01h)

Bit	Description
7-4	**Reserved** with default "0h"
3-0	**Interrupt Level Select for KBC(Keyboard)** Please refer to Table 8-15. Interrupt Level Mapping Table on page 83.

8.8.7 KBC(Keyboard) Interrupt Type (Index=71h, Default=02h)

This register indicates the interrupt type set for KBC(Keyboard) and is **read only** as "02h" when bit 0 of the KBC(Keyboard) Special Configuration Register is cleared. When bit 0 is set, the interrupt type can be selected as level or edge trigger.

Bit	Description
7-2	**Reserved**
1	1: High level 0: Low level
0	1: Level type 0: Edge type

CONFIDENTIAL

8.8.8 KBC(Keyboard) Special Configuration Register (Index=F0h, Default=48h)

Bit	Description
7-5	**Reserved** Must be “000b”
4	**IRQ Type** 1: IRQ sharing 0: Normal
3	**KBC Clock** 1: 8 MHz 0: 12 MHz
2	**KBC Lock** 1: Enable 0: Disable
1	**Interrupt Type Change Enable** 1: The interrupt type for KBC(Keyboard) can be changed. 0: The interrupt type for KBC(Keyboard) is fixed.
0	**Reserved**

CONFIDENTIAL

8.9 KBC(Mouse) Configuration Registers (LDN=06h)

8.9.1 KBC(Mouse) Activate (Index=30h, Default=00h)

Bit	Description
7-1	**Reserved**
0	**KBC(Mouse) Enable** 1: Enable 0: Disable

8.9.2 KBC(Mouse) Interrupt Level Select (Index=70h, Default=0Ch)

Bit	Description
7-4	**Reserved** with default "0h"
3-0	**Interrupt Level Select for KBC(Mouse)** Please refer to Table 8-15. Interrupt Level Mapping Table on page 83.

8.9.3 KBC(Mouse) Interrupt Type (Index=71h, Default=02h)

This register indicates the interrupt type set for KBC(Mouse) and is **read only** as "02h" when bit 0 of the KBC(Mouse) Special Configuration Register is cleared. When bit 0 is set, the interrupt type can be selected as level or edge trigger.

Bit	Description
7-2	**Reserved**
1	1: High level 0: Low level
0	1: Level type 0: Edge type

8.9.4 KBC(Mouse) Special Configuration Register (Index=F0h, Default=00h)

Bit	Description
7-3	**Reserved** with default "00h"
2	**H/W KBC Break Code Test Mode (internal test only)** 1: Enable 0: Disable
1	**IRQ Type** 1: IRQ sharing 0: Normal
0	**Interrupt Type Change Enable** 1: The interrupt type for KBC(Mouse) can be changed. 0: The interrupt type for KBC(Mouse) is fixed.

CONFIDENTIAL

8.10 GPIO Configuration Registers (LDN=07h)

8.10.1 SMI# Normal Run Access Base Address MSB Register (Index=60h, Default=00h)

Bit	Description
7-4	**Read only** as "0h" for Base Address [15:12]
3-0	**Read/write**, mapped as Base Address [11:8]

8.10.2 SMI# Normal Run Access Base Address LSB Register (Index=61h, Default=00h)

Bit	Description
7-2	**Read/write**, mapped as Base Address [7:2]
1-0	**Read only** as "00b"

8.10.3 Simple I/O Base Address MSB Register (Index=62h, Default=00h)

Bit	Description
7-4	**Read only** as "0h" for Base Address [15:12]
3-0	**Read/write**, mapped as Base Address [11:8]

8.10.4 Simple I/O Base Address LSB Register (Index=63h, Default=00h)

Bit	Description
7-0	**Read/write**, mapped as Base Address[7:0]

8.10.5 Panel Button De-bounce Interrupt Level Select Register (Index=70h, Default=00h)

Bit	Description
7-4	**Reserved**
3-0	**Interrupt Level Select for Panel Button De-bounce** Please refer to Table 8-15. Interrupt Level Mapping Table on page 83.

8.10.6 Watch Dog Timer Control Register (Index=71h, Default=00h)

Bit	Description
7	WDT is reset upon a CIR interrupt.
6	WDT is reset upon a KBC(Mouse) interrupt.
5	WDT is reset upon a KBC(Keyboard) interrupt.
4	WDT Status will not be cleared by VCCOK or LRESET#, and be cleared only when one is written to the WDT status 1: Enable 0: Disable
3	Reserved
2	**5VSB_CTRL# Timing Select** 0: 5 seconds 1: 10 seconds
1	**Force Time-out** This bit is self-cleared.
0	**WDT Status** 1: WDT value is equal to 0. 0: WDT value is not is equal to 0.

CONFIDENTIAL

8.10.7 Watch Dog Timer Configuration Register (Index=72h, Default=001s0000b)

Bit	Description
7	**WDT Time-out Value Select 1** 1: Second 0: Minute
6	**WDT Output through KRST (pulse) Enable** 1: Enable 0: Disable
5	**WDT Time-out Value Extra Select** 1: 62.5ms x WDT Timer-out value (default = 3.5s) 0: Determined by WDT Time-out value select 1 (bit 7 of this register)
4	**Reserved**
3-0	**Interrupt Level Select for WDT** Please refer to Table 8-15. Interrupt Level Mapping Table on page 83.

8.10.8 Watch Dog Timer Time-out Value (LSB) Register (Index=73h, Default=38h)

Bit	Description
7-0	**WDT Time-out Value 7-0**

8.10.9 Watch Dog Timer Time-out Value (MSB) Register (Index=74h, Default=00h)

Bit	Description
7-0	**WDT Time-out Value 15-8**

CONFIDENTIAL

8.10.10 GPIO Set 1-9 Registers (Index B0h~D9h)

GPIO Set	Polarity Register		Internal Pull-up Register		Simple Enable Register		Input/Output Select Register		Input/Output Control Register	
	Index	Default	Index	Default	Index	Default	Index	Default	Index	Default
1	B0h	00h	B8h	20h	C0h	01h	C8h	01h	For Simple I/O Base Address Register, please refer to section 8.10.3 for the detail.	
2	B1h	00h	B9h	00h	C1h	00h	C9h	00h		
3	B2h	00h	BAh	00h	C2h	00h	CAh	00h		
4	B3h	00h	BBh	00h	C3h	40h	CBh	40h		
5	B4h	00h	BCh	00h	C4h	00h	CCh	00h		
6	-	-	BDh	00h	-	-	CDh	00h		
7	-	-	-	-	-	-	CEh	00h		
8	-	-	-	-	-	-	CFh	00h		
9	D1h	00h	D4h	00h	D3h	00h	D2h	00h		
A	D6h	00h	D9h	00h	D8h	00h	D7h	00h		

Polarity Registers
These registers are to program the GPIO pin type for polarity inverting or non-inverting.

Bit	Description
7-0	**GPIO Polarity Select** 1: Inverting 0: Non-inverting

Internal Pull-up Enable Registers These registers are to enable the GPIO pin internal pull-up except for GP56, GP57, GP60, and GP61, which have no internal pull-up.

Bit	Description
7-0	**GPIO Pin Internal Pull-up** 1: Enable 0: Disable

Simple I/O Enable Registers
These registers are to select the function as the Simple I/O function or the Alternate function.

Bit	Description
7-0	1: Simple I/O function 0: Alternate function

Simple I/O Output Enable RegistersThese registers are to determine the direction of the Simple I/O.

Bit	Description
7-0	0: Input mode 1: Output mode

8.10.11 Panel Button De-bounce 0 Input Pin Mapping Register (Index=E0h, Default=00h)

Bit	Description
7	**Reserved**
6	**IRQ Enable**
5-0	**Input Pin Location** Please refer to Table 8-17 Location Mapping Table on page 84.

CONFIDENTIAL

8.10.12 Panel Button De-bounce 1 Input Pin Mapping Register (Index=E1h, Default=00h)

Bit	Description
7-6	**Reserved**
5-0	**Input Pin Location** Please refer to Table 8-17 Location Mapping Table on page 84.

8.10.13 IRQ External Routing 1-0 Input Pin Mapping Registers (Index=E3h-E2h, Default=00h)

Bit	Description
7	**Reserved**
6	**IRQ Enable**
5-0	**Input Pin Location** Please refer to Table 8-17 Location Mapping Table on page 84.

8.10.14 IRQ External Routing 1-0 Interrupt Level Selection Registers (Index=E4h, Default=00h)

Bit	Description
7-4	**Interrupt Level Select for IRQ External Routing 1** Please refer to Table 8-15. Interrupt Level Mapping Table on page 83.
3-0	**Interrupt Level Select for IRQ External Routing 0** Please refer to Table 8-15. Interrupt Level Mapping Table on page 83.

8.10.15 APOLLO LAKE/GEMINI LAKE Power Sequence Control Registers (Index=E7h, Default=00h)

Bit	Description
7	**S0iX Enable** 0: Disable (Default) 1: Enable
6	**Reserved**
5	**SUSB# IE Gating for APL/GLK AC in** 0: Disable (Default) 1: Enable
4	**PWRON# Output Gating with RSMRST#** 0: Not gating 1: Gating
3	**Reserved**
2	**THERMTRIP# Status** Writing 0 will reset the status. 0: Not detected 1: Detected
1	**RSMRST#/5VSB_CTRL# Output Low if APL/GLK Forced Shutdown Function Enable** 0: Enable 1: Disable
0	**APL/GLK Forced Shutdown Function** 0: Disable 1: Enable

8.10.16 SMI# Control Register 1 (Index=F0h, Default=00h)

Bit	Description

CONFIDENTIAL

Bit	Description
7	This bit is to enable the generation of an SMI# due to Serial Port 3's IRQ (EN_S3IRQ).
6	This bit is to enable the generation of an SMI# due to KBC(Mouse)'s IRQ (EN_MIRQ).
5	This bit is to enable the generation of an SMI# due to KBC(Keyboard)'s IRQ (EN_KIRQ).
4	This bit is to enable the generation of an SMI# due to Environment Controller's IRQ (EN_ECIRQ).
3	This bit is to enable the generation of an SMI# due to Parallel Port's IRQ (EN_PIRQ).
2	This bit is to enable the generation of an SMI# due to Serial Port 2's IRQ (EN_S2IRQ).
1	This bit is to enable the generation of an SMI# due to Serial Port 1's IRQ (EN_S1IRQ).
0	**Reserved**

8.10.17 SMI# Control Register 2 (Index=F1h, Default=00h)

Bit	Description
7	**Reserved**
6	0: Edge trigger 1: Level trigger
5	This bit is to enable the generation of an SMI# due to Serial Port 6's IRQ (EN_S6IRQ).
4	This bit is to enable the generation of an SMI# due to Serial Port 5's IRQ (EN_S5IRQ).
3	This bit is to enable the generation of an SMI# due to Serial Port 4's IRQ (EN_S4IRQ).
2	This bit is to enable the generation of an SMI# due to WDT's IRQ (EN_WDT).
1	This bit is to enable the generation of an SMI# due to CIR's IRQ (EN_CIR).
0	This bit is to enable the generation of an SMI# due to PBD's IRQ (EN_PBD).

8.10.18 SMI# Status Register 1 (Index=F2h, Default=00h)

This register is used to read the status of SMI# inputs.

Bit	Description
7	**Serial Port 3's IRQ**
6	**KBC (PS/2 Mouse)'s IRQ**
5	**KBC(Keyboard)'s IRQ**
4	**Environment Controller's IRQ**
3	**Parallel Port's IRQ**
2	**Serial Port 2's IRQ**
1	**Serial Port 1's IRQ**
0	**Reserved**

8.10.19 SMI# Status Register 2 (Index=F3h, Default=00h)

This register is used to read the status of SMI# inputs.

Bit	Description
7-6	**Panel Button De-bounce Status 1-0** Writing 1 will reset the status. 0: Not detected 1: Detected
5	**Serial Port 6's IRQ**
4	**Serial Port 5's IRQ**
3	**Serial Port 4's IRQ**
2	**WDT's IRQ**
1	**CIR's IRQ**

CONFIDENTIAL

0	**PBD's IRQ**

8.10.20 SMI# Pin Mapping Register (Index=F4h, Default=00h)

Bit	Description
7-6	**Reserved**
5-0	**SMI# Pin Location** Please refer to Table 8-17 Location Mapping Table on page 84.

8.10.21 Hardware Monitor Thermal Output Pin Mapping Register (Index=F5h, Default=00h)

Bit	Description
7-6	**Reserved**
5-0	**Thermal Output Pin Location** Please refer to Table 8-17 Location Mapping Table on page 84.

CONFIDENTIAL

8.10.22 Hardware Monitor Alert Beep Pin Mapping Register (Index=F6h, Default=00h)

Bit	Description
7-6	**Reserved**
5-0	**Alert Beep Pin Location** Please refer to Table 8-17 Location Mapping Table on page 92.

8.10.23 Keyboard Lock Pin Mapping Register (Index=F7h, Default=00h)

Bit	Description
7-6	**Reserved**
5-0	**Keyboard Lock Pin Location** Please refer to Table 8-17 Location Mapping Table on page 92.

8.10.24 GP LED Blinking 1 Pin Mapping Register (Index=F8h, Default=00h)

Bit	Description
7-6	**Reserved**
5-0	**GP LED Blinking 1 Location** Please refer to Table 8-17 Location Mapping Table on page 92.

8.10.25 GP LED Blinking 1 Control Register (Index=F9h, Default=00h)

Bit	Description
7-4	**Reserved**
3	**GP LED Blinking 1 Short Low Pulse Enable**
2-1	**GP LED 1 Frequency Control** 00: 4 Hz 01: 1 Hz 10: 1/4 Hz 11: 1/8 Hz
0	**GP LED Blinking 1 Output Low Enable**

8.10.26 GP LED Blinking 2 Pin Mapping Register (Index=FAh, Default=00h)

Bit	Description
7-6	**Reserved**
5-0	**GP LED Blinking 2 Location** Please refer to Table 8-17 Location Mapping Table on page 92.

CONFIDENTIAL

8.10.27 GP LED Blinking 2 Control Register (Index=FBh, Default=00h)

Bit	Description
7-4	**Reserved**
3	**GP LED Blinking 2 Short Low Pulse Enable**
2-1	**GP LED 2 Frequency Control** 00: 4 Hz 01: 1 Hz 10: 1/4 Hz 11: 1/2 Hz
0	**GP LED Blinking 2 Output Low Enable**

CONFIDENTIAL

8.11 Serial Port 3 Configuration Registers (LDN=08h)

8.11.1 Serial Port 3 Activate (Index=30h, Default=00h)

Bit	Description
7-1	**Reserved**
0	**Serial Port 3 Enable** 1: Enable 0: Disable

8.11.2 Serial Port 3 Base Address MSB Register (Index=60h, Default=03h)

Bit	Description
7-4	**Read only** as “0h” for Base Address[15:12]
3-0	**Read/write**, mapped as Base Address[11:8]

8.11.3 Serial Port 3 Base Address LSB Register (Index=61h, Default=F8h)

Bit	Description
7-3	**Read/write**, mapped as Base Address[7:3]
2-0	**Read only** as “000b”

8.11.4 Serial Port 3 Interrupt Level Select (Index=70h, Default=0Bh)

Bit	Description
7-4	**Reserved** with default “0h”
3-0	**Interrupt Select Level for Serial Port 3** Please refer to Table 8-15. Interrupt Level Mapping Table. Note: Serial Port 3 doesn’t support IRQ10.

CONFIDENTIAL

8.11.6 Serial Port 3 Special Configuration Register 1 (Index=F0h, Default=00h)

Bit	Description
7	**RS485 Mode** 1: Enable 0: Disable
6	**RTS# Polarity (for RS 485 Mode Only)** 0: Normal 1: Inverted
5-4	**Serial Port 3 Mode** 00: Standard (default) Else : Reserved Please refer to Note 8-1 for the detail.
3	**9-Bit Multi-Drops Mode** 1: Enable 0: Disable
2-1	**Clock Source** 00: 24 MHz/13 (Standard) 01: 24 MHz/12 10: 24 MHz/1 11: 24 MHz/1.625
0	**IRQ Type** 1: IRQ sharing 0: Normal

8.11.7 Serial Port 3 Interrupt Type Register (Index=F1h, Default=50h)

Bit	Description
7-2	**Reserved**
1	1: Low level 0: High level
0	1: Edge type 0: Level type

8.11.8 Serial Port 3 9-Bit Multi-Drops Slave Address Register (Index=F2h, Default=00h)

Bit	Description
7-0	**9-Bit Multi-Drops Slave Address Register**

CONFIDENTIAL

8.12 Serial Port 4 Configuration Registers (LDN=09h)

8.12.1 Serial Port 4 Activate (Index=30h, Default=00h)

Bit	Description
7-1	**Reserved**
0	**Serial Port 4 Enable** 1: Enable 0: Disable

8.12.2 Serial Port 4 Base Address MSB Register (Index=60h, Default=02h)

Bit	Description
7-4	**Read only** as “0h” for Base Address[15:12]
3-0	**Read/write**, mapped as Base Address[11:8]

8.12.3 Serial Port 4 Base Address LSB Register (Index=61h, Default=F8h)

Bit	Description
7-3	**Read/write**, mapped as Base Address[7:3]
2-0	**Read only** as “000b”

8.12.4 Serial Port 4 Interrupt Level Select (Index=70h, Default=0Ah)

Bit	Description
7-4	**Reserved** with default “0h”
3-0	**Interrupt Select Level for Serial Port 4** Please refer to Table 8-15. Interrupt Level Mapping Table.

8.12.5 Serial Port 4 Special Configuration Register 1 (Index=F0h, Default=00h)

Bit	Description
7	**RS485 Mode** 1: Enable 0: Disable
6	**RTS# Polarity (for RS 485 Mode Only)** 0: Normal 1: Inverted
5-4	**Serial Port 4 Mode** 00: Standard (default) Else : Reserved Please refer to Note 8-1 for the detail.
3	**9-Bit Multi-Drops Mode** 1: Enable 0: Disable
2-1	**Clock Source** 00: 24 MHz/13 (Standard) 01: 24 MHz/12 10: 24 MHz/1 11: 24 MHz/1.625
0	**IRQ Type** 1: IRQ sharing 0: Normal

CONFIDENTIAL

8.12.6 Serial Port 4 Interrupt Type Register (Index=F1h, Default=50h)

Bit	Description
7-2	**Reserved**
1	1: Low level 0: High level
0	1: Edge type 0: Level type

8.12.7 Serial Port 4 9-Bit Multi-Drops Slave Address Register (Index=F2h, Default=00h)

Bit	Description
7-0	**9-Bit Multi-Drops Slave Address Register**

CONFIDENTIAL

8.13 Consumer IR Configuration Registers (LDN=0Ah)

8.13.1 Consumer IR Activate (Index=30h, Default=00h)

Bit	Description
7-1	**Reserved**
0	**Consumer IR Enable** 1: Enable 0: Disable

8.13.2 Consumer IR Base Address MSB Register (Index=60h, Default=03h)

Bit	Description
7-4	**Read only** with "0h" for Base Address[15:12]
3-0	**Read/write**, mapped as Base Address[11:8]

8.13.3 Consumer IR Base Address LSB Register (Index=61h, Default=10h)

Bit	Description
7-3	**Read/write**, mapped as Base Address[7:3]
2-0	**Read only** as "000b"

8.13.4 Consumer IR Interrupt Level Select (Index=70h, Default=0Bh)

Bit	Description
7-4	**Reserved** with default "0h"
3-0	**Interrupt Level Select for Consumer IR** Please refer to Table 8-15. Interrupt Level Mapping Table.

8.13.5 Consumer IR Special Configuration Register (Index=F0h, Default=06h)

Bit	Description
7-1	**Reserved** with default "00h"
0	**IRQ Type** 1: IRQ sharing 0: Normal

CONFIDENTIAL

8.14 Serial Port 5 Configuration Registers (LDN=0Bh)

8.14.1 Serial Port 5 Activate (Index=30h, Default=00h)

Bit	Description
7-1	**Reserved**
0	**Serial Port 5 Enable** 1: Enable 0: Disable

8.14.2 Serial Port 5 Base Address MSB Register (Index=60h, Default=03h)

Bit	Description
7-4	**Read only** as “0h” for Base Address[15:12]
3-0	**Read/write**, mapped as Base Address[11:8]

8.14.3 Serial Port 5 Base Address LSB Register (Index=61h, Default=F8h)

Bit	Description
7-3	**Read/write**, mapped as Base Address[7:3]
2-0	**Read only** as “000b”

8.14.4 Serial Port 5 Interrupt Level Select (Index=70h, Default=04h)

Bit	Description
7-4	**Reserved** with default “0h”
3-0	**Interrupt Select Level for Serial Port 5** Please refer to Table 8-15. Interrupt Level Mapping Table.

8.14.5 Serial Port 5 Special Configuration Register 1 (Index=F0h, Default=00h)

Bit	Description
7	**RS485 Mode** 1: Enable 0: Disable
6	**RTS# Polarity (for RS 485 Mode Only)** 0: Normal 1: Inverted
5-4	**Serial Port 5 Mode** 00: Standard (default) Else : Reserved Please refer to Note 8-1 for the detail.
3	**9-Bit Multi-Drops Mode** 1: Enable 0: Disable
2-1	**Clock Source** 00: 24 MHz/13 (Standard) 01: 24 MHz/12 10: 24 MHz/1 11: 24 MHz/1.625
0	**IRQ Type** 1: IRQ sharing 0: Normal

CONFIDENTIAL

8.14.6 Serial Port 5 Interrupt Type Register (Index=F1h, Default=50h)

Bit	Description
7-2	**Reserved**
1	1: Low level 0: High level
0	1: Edge type 0: Level type

8.14.7 Serial Port 5 9-Bit Multi-Drops Slave Address Register (Index=F2h, Default=00h)

Bit	Description
7-0	**9-Bit Multi-Drops Slave Address Register**

CONFIDENTIAL

8.15 Serial Port 6 Configuration Registers (LDN=0Ch)

8.15.1 Serial Port 6 Activate (Index=30h, Default=00h)

Bit	Description
7-1	**Reserved**
0	**Serial Port 6 Enable** 1: Enable 0: Disable

8.15.2 Serial Port 6 Base Address MSB Register (Index=60h, Default=02h)

Bit	Description
7-4	**Read only** as “0h” for Base Address[15:12]
3-0	**Read/write**, mapped as Base Address[11:8]

8.15.3 Serial Port 6 Base Address LSB Register (Index=61h, Default=F8h)

Bit	Description
7-3	**Read/write**, mapped as Base Address[7:3]
2-0	**Read only** as “000b”

8.15.4 Serial Port 6 Interrupt Level Select (Index=70h, Default=03h)

Bit	Description
7-4	**Reserved** with default “0h”
3-0	**Interrupt Select Level for Serial Port 6** Please refer to Table 8-15. Interrupt Level Mapping Table.

8.15.5 Serial Port 6 Special Configuration Register 1 (Index=F0h, Default=00h)

Bit	Description
7	**RS485 Mode** 1: Enable 0: Disable
6	**RTS# Polarity (for RS 485 Mode Only)** 0: Normal 1: Inverted
5-4	**Serial Port 6 Mode** 00: Standard (default) Else : Reserved Please refer to Note 8-1 for the detail.
3	**9-Bit Multi-Drops Mode** 1: Enable 0: Disable
2-1	**Clock Source** 00: 24 MHz/13 (Standard) 01: 24 MHz/12 10: 24 MHz/1 11: 24 MHz/1.625
0	**IRQ Type** 1: IRQ sharing 0: Normal

CONFIDENTIAL

8.15.6 Serial Port 6 Interrupt Type Register (Index=F1h, Default=50h)

Bit	Description
7-2	**Reserved**
1	1: Low level 0: High level
0	1: Edge type 0: Level type

8.15.7 Serial Port 6 9-Bit Multi-Drops Slave Address Register (Index=F2h, Default=00h)

Bit	Description
7-0	**9-Bit Multi-Drops Slave Address Register**

Note 8-1
Except the standard mode, COM1 ~ COM6 cannot be selected in the same mode.

Table 8-15. Interrupt Level Mapping Table

Value	Description
Fh-Dh	Not Valid
Ch	IRQ12
3h	IRQ3
2h	Not Valid
1h	IRQ1
0h	No Interrupt Selected
Else	Not Valid

Table 8-16. DMA Channel Mapping Table

Value	Description
7h-5h	Invalid
4h	No DMA Channel Selected
3h	DMA3
2h	DMA2
1h	DMA1
0h	DMA0

CONFIDENTIAL

Table 8-17 Location Mapping Table

Location	Description
001 000	GP10
001 001	GP11
001 010	GP12
001 011	GP13
001 100	GP14
001 101	GP15
001 110	GP16
001 111	GP17
010 000	GP20
010 001	GP21
010 010	GP22
010 011	GP23
010 100	GP24
010 101	GP25
010 110	GP26
010 111	GP27
011 000	GP30
011 001	GP31
011 010	GP32
011 011	GP33
011 100	GP34
011 101	GP35
011 110	GP36
011 111	GP37
100 000	GP40
100 001	GP41
100 010	GP42
100 011	GP43
100 100	GP44
100 101	GP45
100 110	GP46
100 111	GP47
101 000	GP50
101 001	GP51
101 010	GP52
101 011	GP53
101 100	GP54
101 101	GP55
101 110	GP56
101 111	GP57
Else	Reserved

CONFIDENTIAL

9. Functional Description

9.1 Clock

IT8786 supports two clock inputs, PCICLK/ESPICLK.
PCICLK supports 33.3MHz/25MHz/24MHz/19.2MHz and is required for LPC I/F.
ESPICLK supports 20MHz~60MHz and is required for eSPI I/F.

9.2 LPC Interface

The IT8786E-I supports the peripheral side of the LPC I/F as described in the LPC Interface Specification Rev.1.1. In addition to the required signals (LAD3-0, LFRAME#, LRESET#, LCLK (the same as PCICLK.)), the IT8786E-I also supports LDRQ#, SERIRQ and PME#.

9.2.1 LPC Transactions

The IT8786E-I supports the required transfer cycle types described in the LPC I/F specification. I/O read and I/O write cycles are used for the programmed I/O cycles. DMA read and DMA write cycles are used for DMA cycles. All of these cycles are characteristic of the single byte transfer.

For LPC host I/O read or write transactions, the Super I/O module processes a positive decoding, and the LPC interface can respond to the result of the current transaction by sending out SYNC values on LAD[3:0] signals or leave LAD[3:0] tri-state depending on its result.

For DMA read or write transactions, the LPC interface will react according to the DMA requests from the DMA devices in the Super I/O modules, and decide whether to ignore the current transaction or not.

The ECP is an 8-bit DMA devices, so if the LPC Host initializes a DMA transaction with data size of 16/32 bits, the LPC interface will process the first 8-bit data and respond with an SYNC ready (0000b) which will terminate the DMA burst. The LPC interface will then re-issue another LDRQ# message to assert DREQn after finishing the current DMA transaction.

9.2.2 LDRQ# Encoding

The Super I/O module provides one DMA device: the ECP. The LPC Interface provides LDRQ# encoding to reflect the DREQ[3:0] status. Two LDRQ# messages or different DMA channels may be issued back-to-back to trace DMA requests quickly. Nevertheless, four PCI clocks will be inserted between two LDRQ# messages of the same DMA channel to guarantee that there are at least 10 PCI clocks for one DMA request to change its status. (The LPC host will decode these LDRQ# messages, and send those decoded DREQn to the legacy DMA controller which runs at 4 MHz(33/8 MHz) or 3 Mhz(25/4 Mhz or 24/4 Mhz) up to PCI input clock).

CONFIDENTIAL

9.3 The Enhanced Serial Peripheral Interface (eSPI)

9.3.1 Overview

The Enhanced Serial Peripheral Interface (eSPI) is basically an LPC replacement, and it has more benefits such as low voltage level, low power, higher bandwidth, pin-count saving, etc..

9.3.2 Features

- Compatible with eSPI specification V1.0
- Supports Peripheral Channel only for Short I/O and Short Memory transactions
- Supports OOB Message Channel only for temperature and PECI
- Supports VW IRQ/System event
- Supports eSPI 20MHz to 60MHz

9.3.3 Function Description

9.3.3.1 Peripheral Channel

IO supports legacy LPC transactions over the Peripheral Channel. Short I/O transactions (PUT_IORD_SHORT and PUT_IOWR_SHORT) are used to access PNPCFG and logical devices. The length of short I/O transactions is 1, 2 or 4 bytes, and it is recommended to use the short I/O commands with 1-byte data only. Short Memory transactions (PUT_MEMRD32_SHORT and PUT_MEMWR32_SHORT) or transactions with memory access cycle types (Memory Read 32 and Memory Write 32) are used to access the HWM module.

- Supports port 80h read via parallel port and via serial ports.

The PUT_IORD_SHORT, PUT_IOWR_SHORT, PUT_MEMRD32_SHORT and PUT_MEMWR32_SHORT commands are supported.

CONFIDENTIAL

9.3.3.2 OOB Message Channel

The OOB channel is used to handle transactions between the OOB processor and SIO. SIO is able to initiate an upstream OOB message transaction for reading of PCH HW information, including temperature and PECI, using messages with the predefined slave address and command codes.

The GET_OOB and PUT_OOB commands are supported.

- **Initiate Tempeturate or PECI through eSPI OOB Message Channel**

SIO is able to initiate a posted OOB message transaction over the eSPI bus.

- **Receive a Posted Transaction through eSPI OOB Message Channel**

SIO is able to receive a posted OOB message transaction for Temperature or PEIC over the eSPI bus.

CONFIDENTIAL

9.3.3.3 Virtual Wires Channel

The Virtual Wires channel is used to communicate the state of sideband pins tunneled through eSPI as in-band messages. Serial IRQ interrupts are also communicated through this channel as in-band messages.
.

- Up to 7 virtual wires supported
- Supports interrupt event: IRQ0 – IRQ15
- Supports system event

- **Receive an In-band Message through eSPI Virtual Wire Channel**

SIO is able to receive an in-band message through the eSPI virtual wires channel.

- **Platform Reset**

Platform Reset event is communicated through the PLTRST# virtual wire. It also can be asserted from LRESET# if Platform Reset Control is set. The Platform Reset event is used in resetting the circuits listed below.

Figure 9-1 Scheme of Platform Reset

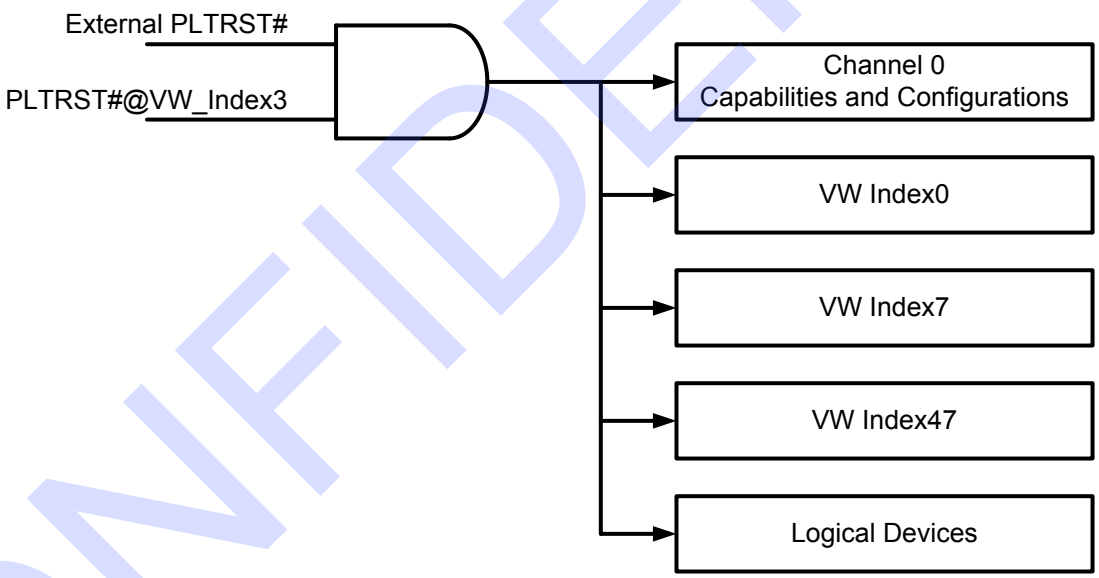

CONFIDENTIAL

9.4 Serialized IRQ

The IT8786E-I follows the specification of Serialized IRQ Support for PCI System, Rev. 6.0, September 1, 1995, to support the serialized IRQ feature, and is able to interface most PC chipsets. The IT8786E-I encodes the parallel interrupts to an SERIRQ which will be decoded by the chipset with built-in Interrupt Controllers (two 8259 compatible modules).

9.4.1 Continuous Mode

When in the Continuous mode, the SIRQ host initiates the Start frame of each SERIRQ sequence after sending out the Stop frame by itself. (The next Start frame may or may not begin immediately after the turn-around state of the current Stop frame.) The SERIRQ is always activated and SIRQ host keeps polling all the IRQn and system events, even though no IRQn status is changed. The SERIRQ enters the Continuous mode following a system reset.

9.4.2 Quiet Mode

In the Quiet mode, when the situation that one SIRQ Slave detects its input IRQn/events have been changed happens, it may initiate the first clock of Start frame. The SIRQ host can then follow to complete the SERIRQ sequence. In the Quiet mode, the SERIRQ has no activity following the Stop frame until it is initiated by SIRQ Slave, which implies low activity = low mode power consumption.

9.4.3 Waveform Samples of SERIRQ Sequence

Figure 9-2. Start Frame Timing

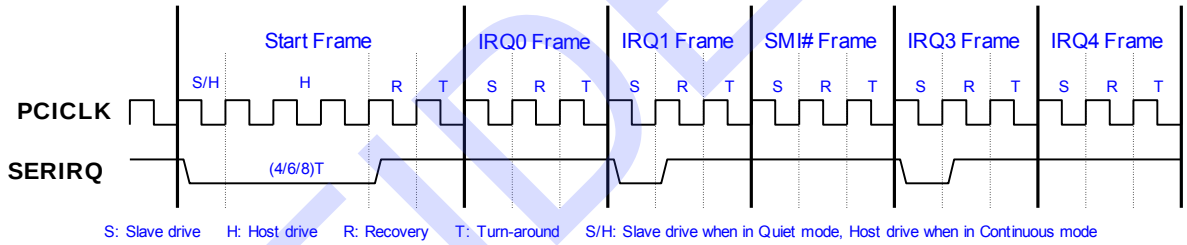

Figure 9-3. Stop Frame Timing

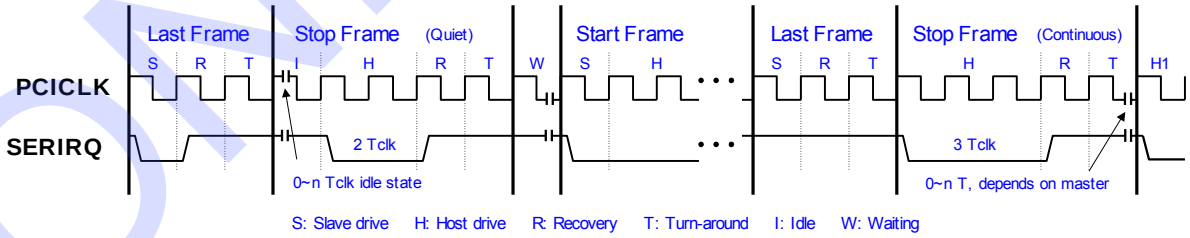

9.4.4 SERIRQ Sampling Slot

Slot Number	IRQn/ Events	#of Clocks Past Start	IT8786E-I

CONFIDENTIAL

1	IRQ0	2	-
2	IRQ1	5	Y
3	SMI#	8	Y
4	IRQ3	11	Y
5	IRQ4	14	Y
6	IRQ5	17	Y
7	IRQ6	20	Y
8	IRQ7	23	Y
9	IRQ8	26	Y
10	IRQ9	29	Y
11	IRQ10	32	Y
12	IRQ11	35	Y
13	IRQ12	38	Y
14	IRQ13	41	-
15	IRQ14	44	Y
16	IRQ15	47	Y
17	IOCHCK#	50	-
18	INTA#	53	-
19	INTB#	56	-
20	INTC#	59	-
21	INTD#	62	-
32:22	Unassigned	95 / 65	-

CONFIDENTIAL

9.5 General Purpose I/O

The IT8786E-I provides eight sets of flexible I/O control and special functions for the system designers via a set of multi-functional General Purpose I/O pins (GPIO). The GPIO functions will not be performed unless the related enable bits of the GPIO Multi-function Pin Selection registers (Index 25h, 26h, 27h, 28h and 29h of the Global Configuration Registers) are set. The GPIO functions include the simple I/O function and alternate function, and the function selection is determined by the Simple I/O Enable Registers (LDN=07h, Index=C0h, C1h, C2h, C3h and C4h).

The Simple I/O function includes a set of registers, which correspond to the GPIO pins. All control bits are divided into eight registers. The accessed I/O ports are programmable and are five consecutive I/O ports (Base Address+0, Base Address+1, Base Address+2, Base Address+3, Base Address+4, Base Address+5, Base Address+6, Base Address+7). Base Address is programmed on the registers of GPIO Simple I/O Base Address LSB and MSB registers (LDN=07h, Index=62h and 63h).

The Alternate function provides several special functions for users, including Watch Dog Timer, SMI# output routing, External Interrupt routing, Panel Button De-bounce, Keyboard Lock input routing, LED Blinking, Thermal output routing, and Beep output routing. The last two are sub-functions of the Hardware Monitor. (GPIO set 6, 7, 8 support the simple I/O function only.)

The Panel Button De-bounce is an input function. After it is enabled, a related status bit will be set when an active low pulse is detected on the GPIO pin. The status bits will be cleared by writing 1's to them. Panel Button De-bounce Interrupt will be issued if any of the status bit is set. However, the newly set status will not issue another interrupt unless the previous status bit is cleared before being set.

The Key Lock function locks the keyboard to inhibit the keyboard interface. The way of programming is to set bit 2 on the register Index F0h of KBC(Keyboard) (LDN=5). The pin location mapping, Index F7h also must be programmed correctly.

The Blinking function provides a low frequency blink output. By connecting to some external components, it can be used to control a power LED. There are several frequencies for selection.

The Watch Dog Timer (WDT) function is constituted by a time counter, a time-out status register, and the timer reset control logic. The time-out status bit may be mapped to an interrupt or KRST# through the WDT configuration register. The WDT has a programmable time-out ranging from 1 to 65535 minutes or 1 to 65535 seconds. The unit, either a minute or a second, is also programmable via bit 7 of the WDT configuration register. When the WDT Time-out Value register is set to a non-zero value, the WDT loads the value and begin counting down from the value. When the value reaches to 0, the WDT status register will be set. There are several system events including a CIR interrupt, a Keyboard Interrupt, a Mouse Interrupt that can reload the non-zero value into the WDT. The effect on the WDT for each of the events may be enabled or disabled through bits in the WDT control register. No matter what the value in the time counter is, the host may force a time-out to occur by writing a "1" to bit 1 of the WDT configuration register.

The External Interrupt routing function provides a useful feature for motherboard designers. Through this function, the parallel interrupts of other on-board devices can be easily re-routed into the Serial IRQ.

The SMI# is a non-maskable interrupt dedicated to the transparent power management. It consists of different enabled interrupts generated from each of the functional blocks in the IT8786E-I. The interrupts are redirected as the SMI# output via the SMI# Control Register 1 and SMI# Control Register 2. The SMI# Status Register 1 and 2 are used to read the status of the SMI input event. All the SMI# Status Register bits can be cleared when the corresponding source events become invalidated. These bits can also be cleared by writing 1 to bit 7 of SMI# Control Register 2 no matter whether the events of the corresponding sources are invalidated or not. The SMI# events can be programmed as the pulse mode or level mode whenever an SMI# event occurs. The logic equation of the SMI# event is described below:

SMI# event = (EN_FIRQ and FIRQ) or (EN_S1IRQ and S1IRQ) or (EN_S2IRQ and S2IRQ) or (EN_PIRQ and PIRQ) or (EN_EC and EC_SMI) or (EN_PBDIRQ or PBDIRQ) or (EN_KIRQ and KIRQ) or (EN_MIRQ and MIRQ) or (EN_CIR and CIR_IRQ) or (EN_WDT and WDT_IRQ)

CONFIDENTIAL

Figure 9-4. General Logic of GPIO Function

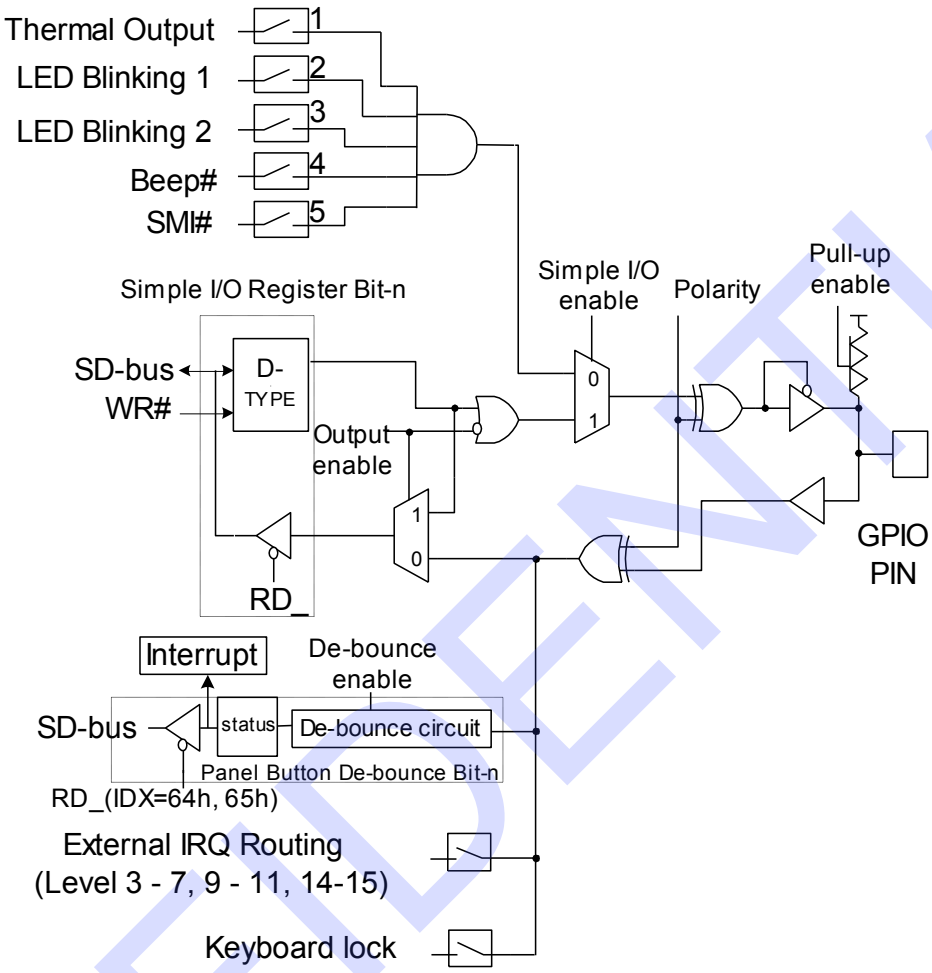

CONFIDENTIAL

9.6 Advanced Power Supply Control and Power Management Event (PME#)

The circuit for advanced power supply control (APC) provides power-up events including Keyboard, Mouse, CIR and RI1#. When any of these events is activated, PWRON# will perform a low state until AVCC3 is switched to the ON state.
Here are the details of these events:

1. Detection of KCLK edge or special pattern of KCLK and KDAT. The special pattern of KCLK means pressing pre-set key string sequentially, and KDAT means pressing pre-set keys simultaneously.
2. Detection of MCLK edge or special pattern of MCLK and MDAT. The special pattern of MCLK and MDAT means clicking on any mouse button twice sequentially.
3. Receiving CIR pattern matches the previous one stored at the APC/PME Special Code Index and Data Register.
4. Detection of RI1# falling edge.

The PANSWH# and PSON# are especially designed for the system. PANSWH# serves as a main power switch input, which is wire-AND to the APC output PWRON#. PSON# is the ATX Power control output, which is a power-failure gating circuit. The power-failure gating circuit is responsible for gating the SUSB# input until PANSWH# becomes active when the 3VSB is switched from OFF to ON.

The power-failure gating circuit can be disabled by setting the APC/PME Control Register 2 (LDN=04h, index F4h, bit 5). The gating circuit also provides an auto-restore function. After bit 5 of PCR1 is set, the previous PSON# state will be restored when the 3VSB is switched from OFF to ON.

The Mask PWRON# Activation bit (bit 4 of PCR 1) is used to mask all power-up events except switch-on event when the 3VSB state is just switched from FAIL to OFF. In other words, when this bit is set and the power state is switched from FAIL to OFF, the only validated function is PANSWH#.

The PCR2 register is responsible for determining the keyboard power-up event and APC conditions. Bit 4 is used to mask the PANSWH# power-on event on the PWRON# pin. To enable this bit, the keyboard power-up event should be enabled and set by (1) pressing pre-set key string sequentially or (2) stroking pre-set keys simultaneously. The APC/PME# special code index and data registers are used to specify the special key codes in the special power-up events of (1) pressing pre-set key string sequentially or (2) stroking pre-set keys simultaneously.

A CIR event is generated if the input CIR RX pattern is the same as that previously stored at PME Special Code Index and Data Registers (LDN=04h, Index=F5h and F6h). The total maximum physical codes are nineteen bytes (from Index 20h to 32h). The first byte (Index 20h) is used to specify the pattern length (in bytes). Bit 7-4 are used when AVCC3 is on and Bit 3-0 when AVCC3 goes OFF. The length represented in each 4-bit will be incremented by 3 internally as the actual length is to be compared. For most of the CIR protocols, the first several bytes are always the same for each key (or pattern). The differences are always in the last several bytes. Thus, the system designer can program the IT8786E-I to generate a CIR PME# event as any keys when AVCC3 is ON and a special key (i.e. POWER-ON) when AVCC3 is OFF.

All APC registers (Index=F0h, F2h, F4h, F5h, F6h, FAh and FBh) are powered by back-up power (VBAT) when 3VSB is OFF.

PME# is used to wake up the system from low-power states (S1-S5).There will be five events of APC to generate PME#. A falling edge on these pins issues PME# events if the enable bits are set.

CONFIDENTIAL

9.7 Environment Controller

The Environment Controller (EC), built in the IT8786E-I, includes five voltage inputs, three temperature sensor inputs, five FAN Tachometer inputs, and five sets of advanced FAN Controllers. The EC monitors the hardware environment and implements the environmental control for personal computers.

The IT8786E-I contains an 8-bit ADC (Analog-to-Digital Converter), which is responsible for monitoring the voltages and temperatures. The ADC converts the analog inputs ranging from 0V to 3.3V to 8-bit digital byte. With additional external components, the analog inputs can be made to monitor different voltage ranges, in addition to monitoring the fixed input range of 0V to 3.3V. Through external thermistors or thermal diodes, the temperature sensor inputs can be converted into 8-bit digital byte, enabling the sensor inputs to monitor the temperature of various components. A built-in ROM is also provided to adjust the non-linear characteristics of thermistors.

FAN Tachometer inputs are digital inputs with an acceptable range from 0V to 5V, and are responsible for measuring the FAN's Tachometer pulse periods.

The EC of the IT8786E-I provides multiple internal registers and an interrupt generator for programmers to monitor the environment and control the FANs. Both of the LPC Bus and Serial Bus interfaces are supported to accommodate the needs for various applications.

9.7.1 Interface

LPC Bus: The Environment Controller of the IT8786E-I decodes two addresses.

Table 9-1. Address Map on LPC Bus

Register or Port	Address
Address register of EC	Base+05h
Data register of EC	Base+06h

Note 1: The Base Address is determined by the Logical Device configuration registers of the Environment Controller (LDN=04h, registers index=60h, 61h).

To access an EC register, the address of the register is written to the address port (Base+05h). Read or write data from or to that register via data port (Base+06h).

9.7.2 Registers

All EC (Environment Controller) registers are listed below. Some of them such as index 10h~12h, etc. have no default values and these settings have impact on VIN, TEMP, and FAN's detection. Therefore, the mistaken action might happen during the detecting process. In order to prevent these unexpected behaviors happening, it is recommended that the related interrupts or SMI mask registers (04h~09h) be enabled for the unused hardware monitor.

9.7.2.1 Address Port (Base+05h, Default=00h)

Bit	Description
7	**Outstanding; read only** This bit is set when a data write is performed to Address Port via the LPC Bus.
6-0	**Index** Internal Address of RAM and Registers.

CONFIDENTIAL

Table 9-2. Environment Controller Registers

Index	R/W	Default	Registers or Action

CONFIDENTIAL

Index	R/W	Default	Registers or Action
00h	R/W	18h	Configuration Register
01h	R	00h	Interrupt Status Register 1
02h	R	00h	Interrupt Status Register 2
03h	R	00h	Interrupt Status Register 3
04h	R/W	00h	SMI# Mask Register 1
05h	R/W	00h	SMI# Mask Register 2
06h	R/W	00h	SMI# Mask Register 3
07h	R/W	00h	Interrupt Mask Interrupt Mask 1
08h	R/W	00h	Interrupt Mask Interrupt Mask 2
09h	R/W	C0h	Interrupt Mask Interrupt Mask 3
0Ah	R/W	44h	Interface Selection Register
0Bh	R/W	0Fh	Fan PWM Smoothing Step Frequency Selection Register
0Ch	R/W	00h	Fan Tachometer Control Register
0Dh	R	-	Fan Tachometer 1 Reading Register
0Eh	R	-	Fan Tachometer 2 Reading Register
0Fh	R	-	Fan Tachometer 3 Reading Register
10h	R/W	-	Fan Tachometer 1 Limit Register
11h	R/W	-	Fan Tachometer 2 Limit Register
12h	R/W	-	Fan Tachometer 3 Limit Register
13h	R/W	07h	Fan Controller Main Control Register
14h	R/W	40h	FAN_CTL Control Register
15h	R/W	00h	FAN_CTL1 PWM Control Register
16h	R/W	00h	FAN_CTL2 PWM Control Register
17h	R/W	00h	FAN_CTL3 PWM Control Register
18h	R	-	Fan Tachometer 1 Extended Reading Register
19h	R	-	Fan Tachometer 2 Extended Reading Register
1Ah	R	-	Fan Tachometer 3 Extended Reading Register
1Bh	R/W	-	Fan Tachometer 1 Extended Limit Register
1Ch	R/W	-	Fan Tachometer 2 Extended Limit Register
1Dh	R/W	-	Fan Tachometer 3 Extended Limit Register
20h	R	-	VIN0 Voltage Reading Register
21h	R	-	VIN1 Voltage Reading Register
22h	R	-	VIN2 Voltage Reading Register
23h	R	-	VIN3 Voltage Reading Register
24h	R	-	VIN4 Voltage Reading Register
27h	R		3VSB Voltage Reading Register
28h	R	-	VBAT Voltage Reading Register
29h	R	-	TMPIN1 Temperature Reading Register
2Ah	R	-	TMPIN2 Temperature Reading Register

CONFIDENTIAL

Index	R/W	Default	Registers or Action
2Bh	R	-	TMPIN3 Temperature Reading Register
30h	R/W	-	VIN0 High Limit Register
31h	R/W	-	VIN0 Low Limit Register
32h	R/W	-	VIN1 High Limit Register
33h	R/W	-	VIN1 Low Limit Register
34h	R/W	-	VIN2 High Limit Register
35h	R/W	-	VIN2 Low Limit Register
36h	R/W	-	VIN3 High Limit Register
37h	R/W	-	VIN3 Low Limit Register
38h	R/W	-	VIN4 High Limit Register
39h	R/W	-	VIN4 Low Limit Register
3Eh	R/W	-	3VSB High Limit Register
3Fh	R/W	-	3VSB Low Limit Register
40h	R/W	-	TMPIN1 High Limit Register
41h	R/W	-	TMPIN1 Low Limit Register
42h	R/W	-	TMPIN2 High Limit Register
43h	R/W	-	TMPIN2 Low Limit Register
44h	R/W	-	TMPIN3 High Limit Register
45h	R/W	-	TMPIN3 Low Limit Register
50h	R/W	00h	ADC Voltage Channel Enable Register
51h	R/W	00h	ADC Temperature Channel Enable Register
52h	R/W	7Fh	TMPIN1 Thermal Output Limit Register
53h	R/W	7Fh	TMPIN2 Thermal Output Limit Register
54h	R/W	7Fh	TMPIN3 Thermal Output Limit Register
55h	R/W	40h	ADC Temperature Extra Channel Enable Register
56h	R/W	00h	Thermal Diode 1 Zero Degree Adjust Register
57h	R/W	00h	Thermal Diode 2 Zero Degree Adjust Register
58h	R	90h	ITE Vendor ID Register
59h	R/W	00h	Thermal Diode 3 Zero Degree Adjust Register
5Bh	R	12h	Core ID Register
5Ch	R/W	60h	Beep Event Enable Register
5Dh	R/W	00h	Beep Frequency Divisor of Fan Event Register
5Eh	R/W	00h	Beep Frequency Divisor of Voltage Event Register
5Fh	R/W	00h	Beep Frequency Divisor of Temperature Event Register
60h	R/W	7Fh	FAN_CTL1 SmartGuardian Automatic Mode Temperature Limit of OFF Register
61h	R/W	7Fh	FAN_CTL1 SmartGuardian Automatic Mode Temperature Limit of Fan Start Register
62h	R/W	7Fh	FAN_CTL1 SmartGuardian Automatic Mode Temperature Limit of Full Speed Register

CONFIDENTIAL

Index	R/W	Default	Registers or Action
63h	R/W	80h	FAN_CTL1 SmartGuardian Automatic Mode Start PWM Register
64h	R/W	00h	FAN_CTL1 SmartGuardian Automatic Mode Control Register
65h	R/W	7Fh	FAN_CTL1 SmartGuardian Automatic Mode △-Temperature Register
66h	R/W	0Fh	FAN_CTL1 Target Zone Register
68h	R/W	7Fh	FAN_CTL2 SmartGuardian Automatic Mode Temperature Limit of OFF Register
69h	R/W	7Fh	FAN_CTL2 SmartGuardian Automatic Mode Temperature Limit of Fan Start Register
6Ah	R/W	7Fh	FAN_CTL2 SmartGuardian Automatic Mode Temperature Limit of Full Speed Register
6Bh	R/W	80h	FAN_CTL2 SmartGuardian Automatic Mode Start PWM Register
6Ch	R/W	00h	FAN_CTL2 SmartGuardian Automatic Mode Control Register
6Dh	R/W	7Fh	FAN_CTL2 SmartGuardian Automatic Mode △-Temperature Register
6Eh	R/W	0Fh	FAN_CTL2 Target Zone Register
70h	R/W	7Fh	FAN_CTL3 SmartGuardian Automatic Mode Temperature Limit of OFF Register
71h	R/W	7Fh	FAN_CTL3 SmartGuardian Automatic Mode Temperature Limit of Fan Start Register
72h	R/W	7Fh	FAN_CTL3 SmartGuardian Automatic Mode Temperature Limit of Full Speed Register
73h	R/W	80h	FAN_CTL3 SmartGuardian Automatic Mode Start PWM Register
74h	R/W	00h	FAN_CTL3 SmartGuardian Automatic Mode Control Register
75h	R/W	7Fh	FAN_CTL3 SmartGuardian Automatic Mode △-Temperature Register
76h	R/W	0Fh	FAN_CTL3 Target Zone Register
80h	R	-	Fan Tachometer 4 Reading LSB Register
81h	R	-	Fan Tachometer 4 Reading MSB Register
82h	R	-	Fan Tachometer 5 Reading LSB Register
83h	R	-	Fan Tachometer 5 Reading MSB Register
84h	R/W	-	Fan Tachometer 4 Limit LSB Register
85h	R/W	-	Fan Tachometer 4 Limit MSB Register
86h	R/W	-	Fan Tachometer 5 Limit LSB Register
87h	R/W	-	Fan Tachometer 5 Limit MSB Register
88h	R/W	00h	External Temperature Sensor Host Status Register
89h	R/W	00h	External Temperature Sensor Host Target Address Register
8Ah	R/W	00h	External Temperature Sensor Host Write Length Register
8Bh	R/W	00h	External Temperature Sensor Host Read Length Register
8Ch	R/W	00h	External Temperature Sensor Host Command (Write Data 1) Register
8Dh	R/W	00h	External Temperature Sensor Write Data (2-8) Register
8Eh	R/W	00h	External Temperature Sensor Host Control Register
8Fh	R	--h	External Temperature Sensor Read Data (1-16) Register

CONFIDENTIAL

Index	R/W	Default	Registers or Action
90h	R/W	FFh	Special FAN Control Mode Extra Vector A Temperature Limit of Fan Start Register
91h	R/W	00h	Special FAN Control Mode Extra Vector A Slope Register
92h	R/W	00h	Special FAN Control Mode Extra Vector A △-Temperature Register
93h	R/W	00h	Special FAN Control Mode Extra Vector A Range Register
94h	R/W	FFh	Special FAN Control Mode Extra Vector B Temperature Limit of Fan Start Register
95h	R/W	00h	Special FAN Control Mode Extra Vector B Slope Register
96h	R/W	00h	Special FAN Control Mode Extra Vector B △-Temperature Register
97h	R/W	00h	Special FAN Control Mode Extra Vector B Range Register
98h	R/W	00000b	PCH/SB-TSI Host Status Register
99h	R/W	00h	PCH/SB-TSI Host Target Address Register
9Ch	R/W	00h	PCH/SB-TSI Host Command Register
9Dh	R/W	--h	PCH/SB-TSI Write Data Register
9Eh	R/W	00h	PCH/SB-TSI Host Control Register
9Fh	R/W	--h	PCH/SB-TSI Read Data (1-16) Register
C0h	R/W	00h	OOB Control Register
C1h	R/W	00h	Get OOB Length Register
C2h	R	-	Put OOB Length Register
C3h	W	-	Get OOB Data Register
C4h	R	-	Put OOB Data Register

9.7.2.2 Register Description

9.7.2.2.1 Configuration Register (Index=00h, Default=18h)

Bit	R/W	Description
7	R/W	**Initialization** A “1” restores all registers to their individual default values, except the Serial Bus Address register. This bit clears itself when the default value is “0”.
6	R/W	**Update VBAT Voltage Reading**
5	R/W	**COPEN# Cleared** Write “1” to clear COPEN#. **Note:** The COPEN# status register (Index 01h<bit4>) will be cleared when first writing this register and then reading Index 01h<bit4>.
4	R	**Read only; always “1”**
3	R/W	**INT_Clear** A “1” disables the SMI# and IRQ outputs while the contents of interrupt status bits remain unchanged.
2	R/W	**IRQ Enable** This bit is to enable the IRQ Interrupt output.
1	R/W	**SMI# Enable** A “1” enables the SMI# Interrupt output.
0	R/W	**Start** A “1” enables the startup of monitoring operations and a “0” sets the monitoring operation in the STANDBY mode.

CONFIDENTIAL

9.7.2.2.2 Interrupt Status Register 1 (Index=01h, Default=00h)

Reading this register will clear itself following a read access.

Bit	R/W	Description
7	R	**Reserved**
6	R	A "1" indicates the FAN_TAC5 Count limit has been reached.
5	R	**Reserved**
4	R	**COPEN# Status** A "1" indicates a Case Open event has occurred. **Note:** The COPEN# status register (Index 01h<bit4>) will be cleared when first writing Index 00h<bit5> and then reading this register.
3-0	R	A "1" indicates the FAN_TAC4-1 Count limit has been reached.

9.7.2.2.3 Interrupt Status Register 2 (Index=02h, Default=00h)

Reading this register will clear itself after the read operation is completed.

Bit	R/W	Description
7	R	A "1" indicates a High or Low limit of 3VSB has been reached.
6-5	R	**Reserved**
4-0	R	A "1" indicates a High or Low limit of VIN4-0 has been reached.

9.7.2.2.4 Interrupt Status Register 3 (Index=03h, Default=00h)

Reading this register will clear itself following a read access.

Bit	R/W	Description
7-4	R	**Reserved**
3	R	**SB-TSI Error Interrupt Status**
2-0	R	A "1" indicates a High or Low limit of Temperature 3-1 has been reached.

9.7.2.2.5 SMI# Mask Register 1 (Index=04h, Default=00h)

Bit	R/W	Description
7	R/W	**Reserved**
6	R/W	A "1" disables the FAN_TAC5 interrupt status bit for SMI#.
5	R/W	**Reserved**
4	R/W	A "1" disables the Case Open Intrusion interrupt status bit for SMI#.
3-0	R/W	A "1" disables the FAN_TAC4-1 interrupt status bit for SMI#.

9.7.2.2.6 SMI# Mask Register 2 (Index=05h, Default=00h)

Bit	R/W	Description
7	R/W	A "1" disables the 3VSB interrupt status bit for SMI#.
6-5	R/W	**Reserved**
4-0	R/W	A "1" disables the VIN4-0 interrupt status bit for SMI#.

9.7.2.2.7 SMI# Mask Register 3 (Index=06h, Default=00h)

Bit	R/W	Description

CONFIDENTIAL

Bit	R/W	Description
7-4	R/W	**Reserved**
3	R/W	A "1" disables the SB-TSI Error interrupt status bit for SMI#.
2-0	R/W	A "1" disables the Temperature 3-1 interrupt status bit for SMI#.

9.7.2.2.8 Interrupt Mask Register 1 (Index=07h, Default=00h)

Bit	R/W	Description
7	R/W	**Reserved**
6	R/W	A "1" disables the FAN_TAC5 interrupt status bit for IRQ.
5	R/W	**Reserved**
4	R/W	A "1" disables the Case Open Intrusion interrupt status bit for IRQ.
3-0	R/W	A "1" disables the FAN_TAC4-1 interrupt status bit for IRQ.

9.7.2.2.9 Interrupt Mask Register 2 (Index=08h, Default=00h)

Bit	R/W	Description
7	R/W	A "1" disables the 3VSB interrupt status bit for IRQ.
6-5	R/W	**Reserved**
4-0	R/W	A "1" disables the VIN4-0 interrupt status bit for IRQ.

9.7.2.2.10 Interrupt Mask Register 3 (Index=09h, Default=C0h)

Bit	R/W	Description
7	R/W	A "1" disables the External Thermal Sensor interrupt.
6	R/W	A "1" disables the SMBus interrupt.
5-4	R/W	**Reserved**
3	R/W	A "1" disables the SB-TSI Error Sensor interrupt.
2-0	R/W	A "1" disables the Temperature 3-1 interrupt status bit for IRQ.

9.7.2.2.11 Interface Selection Register (Index=0Ah, Default=04h)

Bit	R/W	Description
7	R/W	**Pseudo-EOC (End of Conversion of ADC)** A Pseudo-EOC bit can speed up the setup time of FAN speed in the SmartGuardian automatic mode. (Write 1 to the bit then write 0.)
6	R/W	**External Thermal Sensor SMB Host Enable** 0: SMB disabled 1: SMB enabled
5	R/W	**PECI Selection** 0: Disable 1: PECI
4	R/W	**Reserved**
3	R/W	**PECI Host Controller Clock Selection** 0: 32MHz generated internally 1: 24MHz
2	R/W	**PECI Host Controller (Auto Speed No-change Tolerance) t-bit 1 Setting** 0: (2 host clocks) no less than 1 host clock 1: (1 host clock) less than 1 host clock
1	R/W	**Reserved**
0	R/W	**PECI 2.0/3.0 Host Controller Hardware AWFCS Enable** 0: Disable 1: Enable

CONFIDENTIAL

9.7.2.2.12 Fan PWM Smoothing Step Frequency Selection Register (Index=0Bh, Default=0Fh)

Bit	R/W	Description
7-6	R/W	**FAN PWM Smoothing Step Frequency Selection** 00: 1Hz 01: 16Hz 10: 8Hz 11: 4Hz
5-4	R/W	**Reserved** Must be "00b"
3-2	R/W	**FAN_CTL5 Selection** 00: The same as FAN_CTL1 01: The same as FAN_CTL2 10: The same as FAN_CTL3 11: None
1-0	R/W	**FAN_CTL4 Selection** 00: The same as FAN_CTL1 01: The same as FAN_CTL2 10: The same as FAN_CTL3 11: None

9.7.2.2.13 Fan Tachometer Control Register (Index=0Ch, Default=00h)

Bit	R/W	Description
7	R/W	**TMPIN3 Enhanced Interrupt Mode Enable** 0: Original mode 1: The interrupt will be generated when TMPIN3 is higher than the high limit or lower than the low limit.
6	R/W	**TMPIN2 Enhanced Interrupt Mode Enable** 0: Original mode 1: The interrupt will be generated when TMPIN2 is higher than the high limit or lower than the low limit.
5	R/W	**FAN_TAC5 Enable** 0: Disable 1: Enable
4	R/W	**FAN_TAC4 Enable** 0: Disable 1: Enable
3	R/W	**TMPIN1 Enhanced Interrupt Mode Enable** 0: Original mode 1: The interrupt will be generated when TMPIN1 is higher than the high limit or lower than the low limit.
2	R/W	**Reserved**
1	R/W	**PECI Finish Interrupt Mask Register** 0: PECI Finish Interrupt masked (Default) 1: PECI Finish Interrupt enabled
0	R/W	**SB-TSI Error Abort Enable** 0: SB-TSI Error Abort disabled 1: SB-TSI Error Abort enabled

9.7.2.2.14 Fan Tachometer 1-3 Reading Registers (Index=0Dh-0Fh)

Bit	R/W	Description
7-0	R	**Count Number of Internal Clock per Revolution**

CONFIDENTIAL

9.7.2.2.15 Fan Tachometer 1-3 Limit Registers (Index=10h-12h)

Bit	R/W	Description
7-0	R/W	**Limit Value**

9.7.2.2.16 Fan Controller Main Control Register (Index=13h, Default=07h)

Bit	R/W	Description
7	R/W	**PECI Host Controller Transition Speed Mode Selection** 0: 1Mhz (Default) 1: 666Khz
6-4	R/W	**FAN_TAC3-1 Enable** 0: Disable 1: Enable
3	R/W	**Full Speed Control of FAN_CTL Automatic Mode** 0: The full speeds of FAN_CTL1-3 automatic mode are independent. 1: All FAN_CTL1-3 will enter their respective full speeds when the temperature exceeds the full Speed Temperature Limit.
2-0	R/W	**FAN_CTL3-1 Output Mode Selection** 0: ON/OFF mode 1: SmartGuardian mode

9.7.2.2.17 FAN_CTL Control Register (Index=14h, Default=40h)

Bit	R/W	Description
7	R/W	**FAN_CTL Polarity (for all FANs)** 0: Active low 1: Active high
6-4	R/W	**PWM Base Clock Select (for FAN1, 3, 4, 5)** 000: 48MHz (PWM Frequency=187.5kHz) 001: 24MHz (PWM Frequency=93.75kHz) 010: 12MHz (PWM Frequency=46.87kHz) 011: 8MHz (PWM Frequency=31.25kHz) 100: 6MHz (PWM Frequency=23.43kHz) (Default) 101: 3MHz (PWM Frequency=11.7kHz) 110: 1.5MHz (PWM Frequency=5.86kHz) 111: 51kHz (PWM Frequency=200Hz)
3	R/W	**PWM Minimum Duty Select (for FAN1, 3, 4, 5)** 0: 0 % For a given PWM value, the actual duty is PWM/256 X 100%. 1: 20 % For a given PWM value (except 00h), the actual duty is (PWM+64)/320 X 100%. If the given PWM value is 00h, the actual duty will be 0%.
2-0	R/W	**FAN_CTL ON/OFF Mode Control** These bits are only available when the relative output modes are selected in the ON/OFF mode. 0: OFF 1: ON

CONFIDENTIAL

9.7.2.2.18 FAN_CTL 1-3 PWM Control Register (Index=15h,16h,17h, Default=00h)

Bit	R/W	Description
7	R/W	**FAN_CTL1-3 PWM Mode Automatic/Software Operation Selection** 0: Software operation 1: Automatic operation
6-0	R/W	**When bit 7 =0:** **Bit 7-0 of Index 63h, 6Bh, 73h: 256 Steps of PWM Control When in Software Operation** **When bit 7 =1:** **Bit 2: Tachometer Closed-loop Mode Enable Bit** 0: Disable 1: Enable **Bit 1-0: Temperature Input Selection** 00: TMPIN1 01: TMPIN2 10: TMPIN3 11: Reserved **Bit 6-3: Reserved**

9.7.2.2.19 Fan Tachometer 1-3 Extended Reading Registers (Index=18h-1Ah)

Bit	R/W	Description
7-0	R	**Count Number of Internal Clock per Revolution [15:8]**

9.7.2.2.20 Fan Tachometer 1-3 Extended Limit Registers (Index=1Bh-1Dh)

Bit	R/W	Description
7-0	R/W	**Limit Value [15:8]**

9.7.2.2.21 VIN4-0 Voltage Reading Registers (Index=24h-20h)

Bit	R/W	Description
7-0	R	**Voltage Reading Value** **Note: For monitoring Internal AVCC3** **If LDN7, Index 2Ch<bit 0>=1, AVCC3 voltage = VIN3 reading value * 2 * 10.9mV**

9.7.2.2.22 3VSB Voltage Reading Registers (Index=27h)

Bit	R/W	Description
7-0	R	**Internal 3VSB Voltage Reading Value** **The 3VSB voltage = reading value * 2 * 10.9mV**

9.7.2.2.23 VBAT Voltage Reading Register (Index=28h)

Bit	R/W	Description
7-0	R	**VBAT Voltage Reading Value** **Note:** 1. The VBAT voltage = reading value * 2 * 10.9mV

CONFIDENTIAL

9.7.2.2.24 TMPIN3-1 Temperature Reading Registers (Index=2Bh-29h)

Bit	R/W	Description
7-0	R	**Temperature Reading Value**

9.7.2.2.25 3VSB, VIN4-0 High Limit Registers (Index=3Eh, 38h, 36h, 34h, 32h, 30h)

Bit	R/W	Description
7-0	R/W	**High Limit Value**

9.7.2.2.26 3VSB, VIN4-0 Low Limit Registers (Index=3Fh, 39h, 37h, 35h, 33h, 31h)

Bit	R/W	Description
7-0	R/W	**Low Limit Value**

9.7.2.2.27 TMPIN3-1 High Limit Registers (Index=44h, 42h, 40h)

Bit	R/W	Description
7-0	R/W	**High Limit Value**

9.7.2.2.28 TMPIN3-1 Low Limit Registers (Index=45h, 43h, 41h)

Bit	R/W	Description
7-0	R/W	**Low Limit Value**

9.7.2.2.29 ADC Voltage Channel Enable Register (Index=50h, Default=00h)

Bit	R/W	Description
7	R/W	**ADC 3VSB Scan Enable**
6-5	R/W	**Reserved**
4-0	R/W	**ADC VIN4-0 Scan Enable**

9.7.2.2.30 ADC Temperature Channel Enable Register (Index=51h, Default=00h)

TMPIN3-1 cannot be enabled in both Thermal Resistor mode and Thermal Diode (Diode connected Transistor) mode.

Bit	R/W	Description
7-6	R/W	**PECI Host Temperature Reading Report Register Selection** 00: None 01: TMPIN1 Temperature Reading Register.(Index 29h) 10: TMPIN2 Temperature Reading Register.(Index 2Ah) 11: TMPIN3 Temperature Reading Register.(Index 2Bh)
5-3	R/W	TMPIN3-1 is enabled in the Thermal Resistor mode.
2-0	R/W	TMPIN3-1 is enabled in the Thermal Diode (or Diode-connected Transistor) mode.

9.7.2.2.31 TMPIN3-1 Thermal Output Limit Registers (Index=54h-52h, Default=7Fh)

Bit	R/W	Description
7-0	R/W	**Thermal Output Limit Value**

CONFIDENTIAL

9.7.2.2.32 ADC Temperature Extra Channel Enable Register (Index=55h, Default=40h)

Bit	R/W	Description
7	R/W	**Reserved**
6-4	R/W	**FAN_CTRL2 PWM Base Clock Select** 000: 48MHz (PWM Frequency=187.5kHz) 001: 24MHz (PWM Frequency=93.75kHz) 010: 12MHz (PWM Frequency=46.87kHz) 011: 8MHz (PWM Frequency=31.25kHz) 100: 6MHz (PWM Frequency=23.43kHz) (Default) 101: 3MHz (PWM Frequency=11.7kHz) 110: 1.5MHz (PWM Frequency=5.86kHz) 111: 51kHz (PWM Frequency=200Hz)
3	R/W	**FAN_CTRL2 PWM Minimum Duty Select** 0: 0 % For a given PWM value, the actual duty is PWM/256 X 100%. 1: 20 % For a given PWM value (except 00h), the actual duty is (PWM+64)/320 X 100%. If the given PWM value is 00h, the actual duty will be 0%.
2-1	R/W	**Reserved**
0	R/W	VIN4 is enabled in the Thermal Resistor mode.

9.7.2.2.33 Thermal Diode Zero Degree Adjust 3-1 Registers (Index=59h, 57h, 56h, Default=00h)

These registers are **read only** unless bit 7 of 5Ch is set.

Bit	R/W	Description
7-0	R/W	**Thermal Diode Zero Degree Voltage Value**

9.7.2.2.34 Vendor ID Register (Index=58h, Default=90h)

Bit	R/W	Description
7-0	R	**ITE Vendor ID; read Only**

9.7.2.2.35 Code ID Register (Index=5Bh, Default=12h)

Bit	R/W	Description
7-0	R	**ITE Vendor ID; read Only**

9.7.2.2.36 Beep Event Enable Register (Index=5Ch, Default=60h)

Bit	R/W	Description

CONFIDENTIAL

Bit	R/W	Description
7	R/W	**Thermal Diode Zero Degree Adjust Register Write Enable**
6-4	R/W	**ADC Clock Selection** 000: 500kHz 001: 250kHz 010: 125K 011: 62.5kHz 100: 31.25kHz 101: 24MHz 110: 1MHz(Default) 111: 2MHz
3	R/W	**Reserved**
2	R/W	This bit can enable the beep action when TMPINs exceed the limit
1	R/W	This bit can enable the beep action when VINs exceed the limit.
0	R/W	This bit can enable the beep action when FAN_TACs exceed the limit.

9.7.2.2.37 Beep Frequency Divisor of Fan Event Register (Index=5Dh, Default=00h)

Bit	R/W	Description
7-4	R/W	**Tone Divisor** Tone=500/(bits[7:4]+1)
3-0	R/W	**Frequency Divisor** Frequency=10K/(bits[3:0]+1)

9.7.2.2.38 Beep Frequency Divisor of Voltage Event Register (Index=5Eh, Default=00h)

Bit	R/W	Description
7-4	R/W	**Tone Divisor** Tone=500/(bits[7:4]+1).
3-0	R/W	**Frequency Divisor** Frequency=10K/(bits[3:0]+1)

9.7.2.2.39 Beep Frequency Divisor of Temperature Event Register (Index=5Fh, Default=00h)

Bit	R/W	Description
7-4	R/W	**Tone Divisor** Tone=500/(bits[7:4]+1)
3-0	R/W	**Frequency Divisor** Frequency=10K/(bits[3:0]+1)

9.7.2.2.40 FAN_CTL3-1 SmartGuardian Automatic Mode Temperature Limit of OFF Registers (Index=70h, 68h, 60h, Default=7Fh)

Bit	R/W	Description
7-0	R/W	**Temperature Limit Value of Fan OFF**

9.7.2.2.41 FAN_CTL3-1 SmartGuardian Automatic Mode Temperature Limit of Fan Start Registers (Index=71h, 69h, 61h, Default=7Fh)

Bit	R/W	Description
7-0	R/W	**Temperature Limit Value of Fan Start**

9.7.2.2.42 FAN_CTL3-1 SmartGuardian Automatic Mode Temperature Limit of Full Speed Registers

CONFIDENTIAL

(Index=72h, 6Ah, 62h, Default=7Fh)

Bit	R/W	Description
7-0	R/W	**Temperature Limit Value of Fan Full Speed**

9.7.2.2.43 FAN_CTL3-1 SmartGuardian Automatic Mode Start PWM Registers (Index=73h, 6Bh, 63h, Default=80h)

For Original Fan Control Mode:

Bit	R/W	Description
7-0	R/W	**When bit 7 of index 15h, 16h, 17h =0:** **256 Steps of PWM Control When in Software Operation** **When bit 7 of index 15h, 16h, 17h =1:** PWM Value

For Tachometer Closed-loop Mode:

Bit	R/W	Description
7-0	R/W	**Initial Value of Target RPM** RPM = 16 * Bit[7:0]

9.7.2.2.44 FAN_CTL3-1 SmartGuardian Automatic Mode Control Registers (Index=74h, 6Ch, 64h, Default=00h)

For Original Fan Control Mode:

Bit	R/W	Description
7	R/W	**FAN Smoothing** This bit enables the FAN PWM smoothing change. 0: Disable 1: Enable
6-0	R/W	**Slope PWM Bit[6:0]** Slope = (Slope PWM bit[6:3] + Slope PWM bit[2:0] / 8) PWM value/℃

For Tachometer Closed-loop Mode:

Bit	R/W	Description
5-0	R/W	**Slope of Target RPM** Slope = 8 * Bit[5:0] (RPM/℃)

CONFIDENTIAL

9.7.2.2.45 FAN_CTL3-1 SmartGuardian Automatic Mode △-Temperature Registers (Index=75h, 6Dh, 65h, Default=00h)

Bit	R/W	Description
7	R/W	**Direct-Down Control** This bit is to determine the PWM linear changing decreasing mode. 0: Slow decreasing mode 1: Direct decreasing mode
6	R/W	**FAN Full Limit Control as Thermal out Reached** When the relevant enable bit is set and the FAN output mode is selected as Automatic mode by bit7 of EC index 15h, 16h, 17h, the corresponding FAN output will be forced to full PWM if any thermal output limit is reached. 0: Disable 1: Enable
5	-	**Reserved**
4-0	R/W	**△-Temperature Interval [4:0]**

9.7.2.2.46 FAN_CTL3-1 Target Zone Registers (Index=76h, 6Eh, 66h, Default=0Fh)

For Tachometer Closed-loop Mode:

Bit	R/W	Description
3-0	R/W	**Target Zone Boundary** Target Zone = Target RPM +/- (8 * bit[3:0]) (RPM/℃)

9.7.2.2.47 Fan Tachometer 4-5 Reading LSB Registers (Index=80h,82h)

Bit	R/W	Description
7-0	R	**Count Number of Internal Clock per Revolution**

9.7.2.2.48 Fan Tachometer 4-5 Reading MSB Registers (Index=81h,83h)

Bit	R/W	Description
7-0	R	**Count Number of Internal Clock per Revolution**

9.7.2.2.49 Fan Tachometer 4-5 Limit LSB Registers (Index=84h,86h)

Bit	R/W	Description
7-0	R/W	**Limit Value**

9.7.2.2.50 Fan Tachometer 4-5 Limit MSB Registers (Index=85h,87h)

Bit	R/W	Description
7-0	R/W	**Limit Value**

9.7.2.2.51 External Temperature Sensor Host Status Register (Index=88h, Default= -00h)

Bit	R/W	Description

CONFIDENTIAL

Bit	R/W	Description
7	R/W	**Data FIFO Pointer Clear** Writing 1 clears the Read/Write Data FIFO pointers. 0: No action It always reports 0 when reading it. 1: Both Read and Write Data FIFO pointers cleared Read Data register will point to Read Data 1, and Write Data register will point to Write Data 2.
6	R/WC	**PECI Bus Abnormal/Contention Error** This bit reports the PECI line status. 0: No error 1: Abnormal/Contention error
5	R/WC	**PECI Received Error Code** This bit reports the PECI line status and received error code (8000h-81FFh). 0: No error 1: Error found
4	R/WC	**PECI Line High-Z Status/Failed** This bit reports the PECI line High-Z status. 0: PECI line does not drive High-Z. 1: PECI line drives High-Z.
3	R/WC	**Write_FCS_ERR** Writing 1 clears this bit. In the PECI mode, it reports Write FCS error. 0: No Error 1: Write FCS error
2	R/WC	**NotValid/Read_FCS_ERR** Writing 1 clears this bit. In the PECI mode, it reports Read FCS error. 0: No Error 1: Read FCS error
1	R/WC	**Finish (FNSH)** Writing 1 clears this bit. 0: None 1: This bit is set when the stop condition is detected.
0	R	**Host Busy (BUSY)** 0: The current transaction is completed. 1: This bit is set while the command is in operation.

9.7.2.2.52 External Temperature Sensor Host Target Address Register (Index=89h, Default=00h)

Bit	R/W	Description
7-0	R/W	**Host Target Address Register (HAddr [7:0])** This register is the Target Address field of the PECI protocol.

9.7.2.2.53 External Temperature Sensor Host Write Length Register (Index=8Ah, Default=00h)

Bit	R/W	Description
7-0	R/W	**Host Write Length Register (HW_length [7:0])** This register is the Write Length field of the PECI protocol.

9.7.2.2.54 External Temperature Sensor Host Read Length Register (Index=8Bh, Default=00h)

Bit	R/W	Description
7-0	R/W	**Host Read Length Register (HR_length [7:0])** This register is the Read Length field of the PECI protocol.

CONFIDENTIAL

9.7.2.2.55 External Temperature Sensor Host Command (Write Data 1) Register (Index=8Ch, Default=00h)

Bit	R/W	Description
7-0	R/W	**Host Command Register (HCMD [7:0])** This register is the command field of the protocol. In the PECI mode, it is the command (Write Data 1) byte.

9.7.2.2.56 External Temperature Sensor Write Data (2-8) Register (Index=8Dh, Default=--h)

Bit	R/W	Description
7-0	R/W	**Write Data (2-8) [7:0] (in PECI mode)** This is a 16-byte FIFO register, which is only valid in the PECI mode.

9.7.2.2.57 External Temperature Sensor Host Control Register (Index=8Eh, Default=00h)

Bit	R/W	Description
7-6	R/W	**Auto-Start Control (Auto-START)** The host will start the transaction in a regular rate automatically. 00: 32 Hz 01: 16 Hz 10: 8 Hz 11: 4 Hz
5	R/W	**Auto-Start (Auto-START)** 0: Disable 1: Enable The host will start the transaction in a regular rate, which is determined by bit [6:5] automatically.
4	R/W	**PECI Host Auto-abort at FCS Error** This bit enables the PECI host to abort the transaction when an error occurs to FCS. 0: Disable 1: Enable
3	R/W	**Auto-Start Two-Domain Enable** 0: One-Domain 1: Two-Domain
2	R/W	**PECI Contention Control** This bit enables the PECI bus contention control. 0: Disable 1: Enable When the PECI bus is contentious, the host will abort the transaction.
1	R/W	**PECI_idle_High** This bit sets the PECI bus idle-high in the PECI host mode. 0: PECI idle low 1: PECI idle high
0	R/W	**Start (START)** This bit is **write-only**. Writing 0 to it during transaction will issue a “kill process” and bit 4 of 88h register will be set. Writing 1 to it during the “NOT BUSY” state (bit 0 of 88h = 0) will start a transaction. Writing 1 to it during the “BUSY” state (bit 0 of 88h = 1) will not issue any transaction. So, the programmer should check the “BUSY” status before issuing a transaction. 0: This bit always returns 0 at read. 1: When this bit is set, the host controller will perform the transaction.

9.7.2.2.58 External Temperature Sensor Read Data (1-16) Register (Index=8Fh, Default=--h)

CONFIDENTIAL

Bit	R/W	Description
7-0	R/W	**Read Data (1-16) [7:0]** This is a 32-byte FIFO register.

9.7.2.2.59 Special FAN Control Mode Extra Vector A, B Temperature Limit of Fan Start Registers (Index=90h, 94h, Default=FFh)

Bit	R/W	Description
7-0	R/W	**Temperature Limit Value of Fan Start**

9.7.2.2.60 Special FAN Control Mode Extra Vector A, B Slope Registers (Index=91h, 95h, Default=00h)

For Original Fan Control Mode:

Bit	R/W	Description
7	R/W	**Temperature Input Select 0** Please refer to the description of Special FAN Control Mode Extra Vector A, B △-Temperature Registers for the detail.
6-0	R/W	**Slope PWM Bit[6:0]** Slope = (Slope PWM bit[6:3] + Slope PWM bit[2:0] / 8) PWM value/℃

For Tachometer Closed-Loop Mode:

Bit	R/W	Description
7	R/W	**Temperature Input Select 0** Please refer to the description of Special FAN Control Mode Extra Vector A, B △-Temperature Registers for the detail.
6-0	R/W	**Slope of Extra A and B RPM** Slope = 8 * Bit[6:0] (RPM/℃)

9.7.2.2.61 Special FAN Control Mode Extra Vector A, B △-Temperature Registers (Index=92h, 96h, Default=00h)

Bit	R/W	Description
7	R/W	**Temperature Input Select 1** For **Temperature Input Select 0**, please refer to bit 7 of Special FAN Control Mode Extra Vector A, B Slope Registers. 00: TMPIN1 01: TMPIN2 10: TMPIN3 11: Reserved
6-5	R/W	**Target FAN Select** These bits are to determine the target FAN to be added for extra vector. 00: None 01: FAN1 10: FAN2 11: FAN3
4-0	R/W	**△-Temperature Interval [4:0]**

9.7.2.2.62 Special FAN Control Mode Extra Vector A, B Range Registers (Index=93h, 97h, Default=00h)

For Original Fan Control Mode:

Bit	R/W	Description

CONFIDENTIAL

7	R/W	**Positive/Negative Slope Selection** This bit is to select whether the slope value in Special FAN Control Mode Extra Vector A, B is positive or negative. 0: Postive 1: Negive
6-0	R/W	**Range Selection [6:0]** These bits determine the extra vector range after the temperature limit (Index 90h, 94h). If the input temperature > (temperature limit + Range [6:0]), the vector will equal the value of (temperature limit + Range [6:0]). If Range [6:0]=00h, it means no range limit.

9.7.2.2.63 PCH/SB-TSI Host Status Register (Index=98h, Default=---00000b)

Bit	R/W	Description
7	R/W	**Data FIFO Pointer Clear** Writing 1 clears Read/Write Data FIFO pointers. 0: No action It always reports 0 when reading it. 1: Both Read and Write Data FIFO pointers cleared Read Data register will point to Read Data 1, and Write Data register will point to Write Data 2.
6	R/W	**Bus Selection** This bit selects the SMB host protocol. 0: SM-Bus Block R/W (support PCH SM-Link) 1: SM-Bus Byte R/W (support SB-TSI)
5	R/WC	**Reserved**
4	R/WC	**Transmission Killed**
3	R/WC	**Bus Error** 0: No error 1: Error
2	R/WC	**Data Valid** Writing 1 clears this bit. In the SB-TSI mode, it reports the valid bit of Data phase. If this bit is set to 0(valid data =0), the data is valid. 0: Data valid 1: Data invalid
1	R/WC	**Finish (FNSH)** Writing 1 clears this bit. 0: None 1: This bit is set when the stop condition is detected.
0	R	**HOST Busy (BUSY)** 0: The current transaction is completed. 1: This bit is set while the command is in operation.

9.7.2.2.64 PCH/SB-TSI Host Target Address Register (Index=99h, Default=00h)

Bit	R/W	Description
7-0	R/W	**Host Target Address Register (HAddr [7:0])** This register is the Target Address field of the PCH/SB-TSI protocol.

9.7.2.2.65 PCH/SB-TSI Host Command Register (Index=9Ch, Default=00h)

Bit	R/W	Description
7-0	R/W	**Host Command Register (HCMD [7:0])** This register is the command field of the protocol. In the SB-TSI mode, it is the Command field. If the host controller is busy, the value of this register cannot be changed or the host will send the wrong command. If the value is out of definition (for

CONFIDENTIAL

		example, 03h to FFh for SB-TSI protocol), the host will transfer it to the normal value and no error will be detected by the host controller.

9.7.2.2.66 PCH/SB-TSI Write Data Register (Index=9Dh, Default=--h)

Bit	R/W	Description
7-0	R/W	**Write Data** This is a 16-byte FIFO register.

9.7.2.2.67 PCH/SB-TSI Host Control Register (Index=9Eh, Default=00h)

Bit	R/W	Description
7-6	R/W	**Auto-Start Control (Auto-START)** The host will start the transaction in a regular rate automatically. 00: Disable auto-start 01: 16 Hz 10: 8 Hz 11: 4 Hz
5-4	R/W	**For SB-TSI Temperature Reading Report Register Selection** 00: None 01: Index 29h (TMPIN1) 10: Index 2Ah (TMPIN2) 11: Index 2Bh (TMPIN3) **For SM-Link Max. Temperature of CPU or MCH Reading Report Register Selection** 01: Index 29h 11: Index 2Bh **For SM-Link PCH Temperature Reading Report Register Selection** 00: Index 2Ah, if 9Eh<1>=1. **For MxM Temperature Reading Report Register Selection** 10: Index 2Ah, if 9Eh<1>=1.
3	R/W	**Reserved**
2	R/W	**SB-TSI Clock Selection** 0: 100 kbits/s 1: 400 kbits/s
1	R/W	**PCH/MxM Temp Reported to 2Ah** 0: Disable 1: Enable Please refer to 9Eh<bit 5-4> for the detail. **SB-TSI_byte_sel** This bit selects 8/16 bit data in the SB-TSI mode. 0: SB-TSI 8-bit data 1: SB-TSI 16-bit data
0	R/W	**Start (START)** This bit is **write-only**. Writing 0 to it during transaction will issue a “kill process” and bit 4 of 98h register will be set. Writing 1 to it during the “NOT BUSY” state (bit 0 of 98h = 0) will start a transaction. Writing 1 to it during the “BUSY” state (bit 0 of 98h = 1) will not issue any transaction. So, the programmer should check whether the status is “BUSY” before issuing a transaction. 0: This bit always returns 0 at read. 1: When this bit is set, the host controller will perform the transaction.

CONFIDENTIAL

9.7.2.2.68 PCH/SB-TSI Read Data (1-16) Register (Index=9Fh, Default=--h)

Bit	R/W	Description
7-0	R/W	**Read Data (1-16) [7:0]** This is a 21-byte FIFO register.

CONFIDENTIAL

9.7.2.2.69 OOB Control Register (Index=C0h, Default=00h)

Bit	R/W	Description
7	R/W	**OOB Data FIFO Pointer Clear** Wirte 1 clear
6	R/W	**OOBTEMP Update Data Available Mask** 0: Disable 1: Enable
5	R/W	**PECI TEMP Update Data Available Mask** 0: Disable 1: Enable
4	RW/	**OOB Free Control Bit** 0: OOB is free when data is empty. 1: Always free
3	R/W	**Get Temp Auto Enable**
2	R/W	**GET_OOB Auto Enable**
1	R/W	**PUT OOB Message Data Status** 1: Data available 0: Data empty
0	R/W	**GET OOB Message Start Bit** 1: Start 0: Idle

9.7.2.2.70 Get OOB Length Register (Index=C1h, Default=00h)

Bit	R/W	Description
7	R/W	A “1” disables the PUT_OOB interrupt for SMI.
6	R/W	A “1” disables the PUT_OOB interrupt for IRQ.
5:0	R/W	GET OOB Length[5:0]

9.7.2.2.71 Put OOB Length Register (Index=C2h)

Bit	R/W	Description
7:0	R	**PUT OOB Length[7:0]**

9.7.2.2.72 Get OOB Data Register (Index=C3h)

Bit	R/W	Description
7:0	W	**24 bytes of FIFO**

9.7.2.2.73 PUT OOB Data Register (Index=C4h)

Bit	R/W	Description
7:0	R	**16 Bytes of FIFO**

CONFIDENTIAL

9.7.3 Operation

9.7.3.1 Power on Reset and Software Reset

When the system power is first applied, the Environment Controller performs “power on reset” on the registers, making them return to their individual default values during a system hardware reset, and the EC will acquire a monitored value before it goes inactive. The ADC is activated to monitor the VBAT pin and then goes inactive. A software reset through bit 7 of Configuration Register (Index=00h, Default=18h) (refer to page 108) performs the same functions as the hardware reset except the function of the Serial Bus Interface Address register.

9.7.3.2 Starting Conversion

The monitoring function in the EC is activated when bit 3 of Configuration Register is cleared (low) and bit 0 of Configuration Register is set (high). Otherwise, this function will be enabled by setting several enabled bits, which are categorized into three groups, positive voltages, temperatures and FAN Tachometer inputs. Before the EC monitoring function is able to be executed then the monitoring process can then be started.

1. Set the limits.
2. Set the interrupt masks.
3. Set the enable bits.

Figure 9-5. Application Example

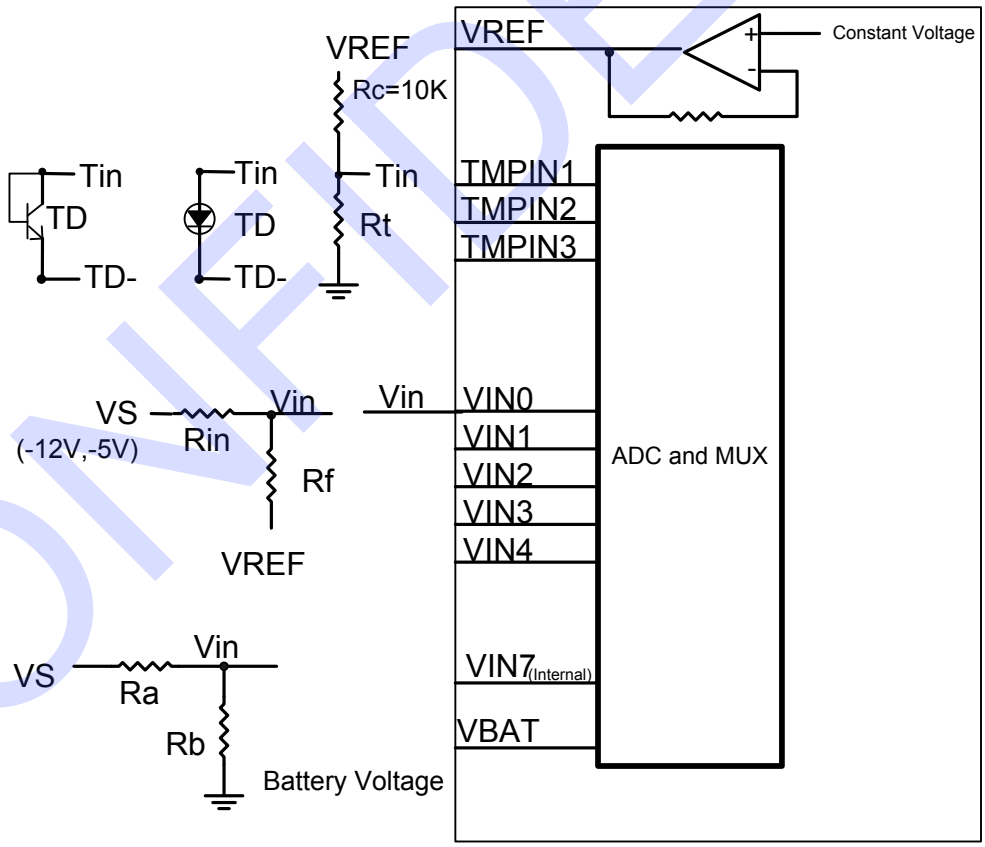

Note: The resistor should provide approximately 2V at the Analog Inputs.

CONFIDENTIAL

9.7.3.3 Voltage and Temperature Inputs

The 8-bit ADC has a 10.9mV LSB with an input range from 0V to 2.8V. The 2.5V supplies of PC applications can be directly connected to the inputs. When the input voltage is greated than 2.8V, it is necessary to divide the input voltage into an acceptable range. When the divided circuit is used to measure the positive voltage, the recommended range for Ra and Rb is from 10KΩ to 100KΩ. The negative voltage can be measured by the same divider, which is connected to VREF (constant voltage, 2.8V), and do not attempt to measure it with the divider connected to the ground. The EC temperature measurement system converts the voltage of the TMPINs to 8-bit two's-complement. The system also includes an OP amp providing a constant voltage, an external thermistor, a constant resistance, the ADC and a conversion table ROM.

Temperature	Digital Output Format	
	Binary	Hex
+ 125°C	01111101	7Dh
+ 25°C	00011001	19h
+ 1°C	00000001	01h
+ 0°C	00000000	00h
- 1°C	11111111	FFh
- 25°C	11100111	E7h
- 55°C	11001001	C9h

With the addition of the external application circuit, the actual voltages are calculated below:

Positive Voltage: Vs = Vin X (Ra+Rb) / Rb
Negative Voltage: Vs = (1+Rin/Rf) X Vin – (Rin/Rf) X VREF

All the analog inputs are equipped with the internal diodes that clamp the input voltage exceeding the power supply and ground; nevertheless, the current limiting input resistor is recommended since no dividing circuit is available.

9.7.3.4 Layout and Grounding

A separate and low-impedance ground plane for analog ground is essential to achieve accurate measurement. The analog ground also provides a ground point for the voltage dividers including the temperature loops and analog components. Analog components such as voltage dividers, feedback resistors and the constant resistors of the temperature loops should be located as closely as possible to the IT8786E-I. However, the thermistors of the temperature loops should be positioned within the measuring area. In addition, the power supply bypass and the parallel combination of 10μF and 0.1μF bypass capacitors connected between AVCC3 and analog ground also needs to be located as closely as possible to the IT8786E-I.

Due to the small differential voltage of thermal diode (diode-connected transistor), it is necessary to adhere to the steps below for PCB layout.

- Position the sensor as closely as possible to the EC.
- The sensor ground should be directly shorted to GNDA with excellent noise immunity.
- Keep traces away from any noise sources. (High voltage, fast data bus, fast clock , CRTs …)
- Use trace width of10 mil minimum and provide guard ground (flanking and under).
- Position 0.1μF bypass capacitors as closely as possible to IT8786E-I.

CONFIDENTIAL

9.7.3.5 Fan Tachometer

The Fan Tachometer inputs gate a 22.5 kHz clock into an 8-bit or 16-bit counter (maximum count=255 or 65535) for one period of the input signals. Counts are based on two pulses per revolution for tachometer output.

RPM = 1.35 X 10^6 / (Count X Divisor) ; (Default Divisor = 2)

The maximum input signal range is from 0 to VCC. An additional external circuit is needed to clamp the input voltage and current.

9.7.3.6 Interrupt of the EC

The EC generates interrupts as a result of each of its Limit registers on the analog voltage, temperature, and FAN monitor. All the interrupts are indicated in two Interrupt Status Registers. The IRQ and SMI# outputs have individual mask registers. These two Interrupts can also be enabled/disabled by Configuration Register (Index=00h, Default=18h) (refer to page 108). The Interrupt Status Registers will be reset after a read operation. When the Interrupt Status Registers are cleared, the Interrupt lines will also be cleared. When a read operation is completed before the completion of the monitoring loop sequence, it indicates an Interrupt Status Register has been cleared. It takes EC 1.5 seconds to allow all the EC Registers to be safely updated between completed read operations. When bit 3 of the Configuration Register is set to high, the Interrupt lines are cleared and the monitoring loop will be stopped. The loop will resume after this bit is cleared.

All analog voltage inputs have both high and low Limit Registers to generate interrupts whereas FAN monitoring inputs only have low Limit Register to warn the host. The IT8786E-I provides three modes dedicated to temperature interrupts in the EC: “Interrupt” mode, “Enhanced Interrupt” mode and “Comparator” mode.

Interrupt Mode
An interrupt will be generated whenever the temperature exceeds Th limit, and the corresponding interrupt status bits will be set to high until being reset by reading Interrupt Status Register 3 (Index=03h, Default=00h) (refer to page 108). Once an interrupt event occurs by exceeding Th limit, an interrupt will only occur again when the temperature goes below TL limit after being reset. Again, it will set the corresponding status bit to high until being reset by reading Interrupt Status Register 3 (Index=03h, Default=00h) (refer to page 108).

Enhanced Interrupt Mode
When the enhanced interrupt mode is enabled (bit 3, 6 and 7 of Fan Tachometer Control Register (Index=0Ch, Default=00h) for TMPIN1, 2, and 3 respectively) (refer to page 110), an interrupt will be generated when the temperature is higher than the high limit or lower than the low limit.

Comparator Mode
This mode is entered when the TL limit register is set to 127°C. In this mode, an interrupt will be generated whenever the temperature exceeds the Th limit. The interrupt will also be cleared by reading Interrupt Status Register 3 (Index=03h, Default=00h) (refer to page 108), but the interrupt will be set again following the completion of another measurement cycle. It will remain set until the temperature goes below the Th limit.

CONFIDENTIAL

Figure 9-6. Temperature Interrupt Response Diagram

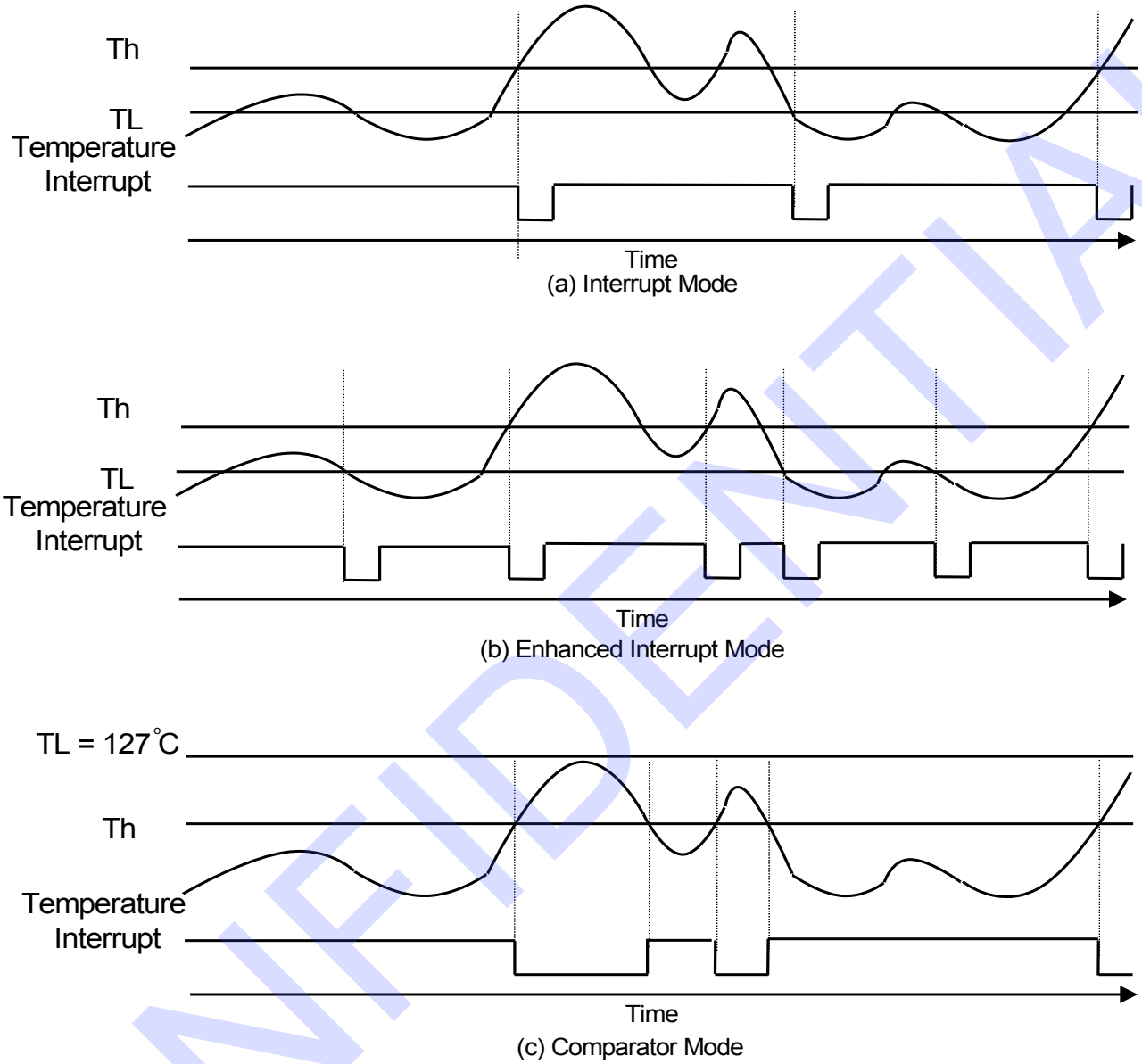

9.7.3.7 FAN Controller FAN_CTL's ON-OFF and SmartGuardian Modes

The IT8786E-I provides an advanced FAN Controller. Two modes, ON_OFF and SmartGuardian, are provided for each controller. The former is a logical ON or OFF, and the latter is a PWM output. With the addition of external application circuits, the FAN's voltage values can be varied easily.

In the SmartGuardian Mode, there are two operational choices, software control or automatic control.

While under software control, the PWM value is subject to the changes in the values of bit 6-0 of FAN_CTL 1-3 PWM Control Registers (Index=15h, 16h, 17h). With the application circuits, FAN_CTL can generate 256 steps of voltage. So, the FAN_CTL 1-3 PWM Control Registers can vary the voltage by changing the PWM value. Fan speeds or other voltage control cooling device can be varied in 256 steps.

While under automatic mode, the PWM value is subject to the temperature inputs by linear changes. When

CONFIDENTIAL

the temperature exceeds a start limit, FAN_CTL spins in a start PWM value (Index 73h, 6Bh, 63h). When the temperature reading is between the Start limit and the full limit (=Ts+(256- Start PWM)/Slope), the PWM value changes depending on the temperature reading if the reading exceeds the right boundary. If the temperature increases X ℃, the PWM value will increase X * K. K (Slope) is a constant value with 4 bits for the integer and 3 bits for the decimal, and is determined by bit 7 of FAN_CTL 3-1 SmartGuardian Automatic mode Start PWM register and bit 5-0 of FAN_CTL 3-1 SmartGuardian Automatic mode control registers. However, if the reading doesn't exceed the right boundary, the PWM value will keep the original value. For example, if PWM is currently at a value of Pa, it will not change if Tb < the temperature reading < Ta. If the new reading (Tnew) > Ta, the new PWM value will be Start PWM + K * (Tnew – Ts). If the new reading < Tb, there are two decreasing modes. If bit 7 of FAN_CTL 3-1 SmartGuardian Automatic mode △-Temperature is 0, the new PWM value will be Start PWM + K * ((Tnew+Ta)/2 – Ts). If the bit is 1, the new PWM value will be Start PWM + K * (Tnew – Ts). When the temperature is lower than the start limit but larger than the OFF limit (Index 70h, 68h, 60h), FAN_CTL will not stop, but keep in the start PWM value until the temperature is lower than the OFF limit.

Figure 9-7. SmartGuardian Automatic Mode

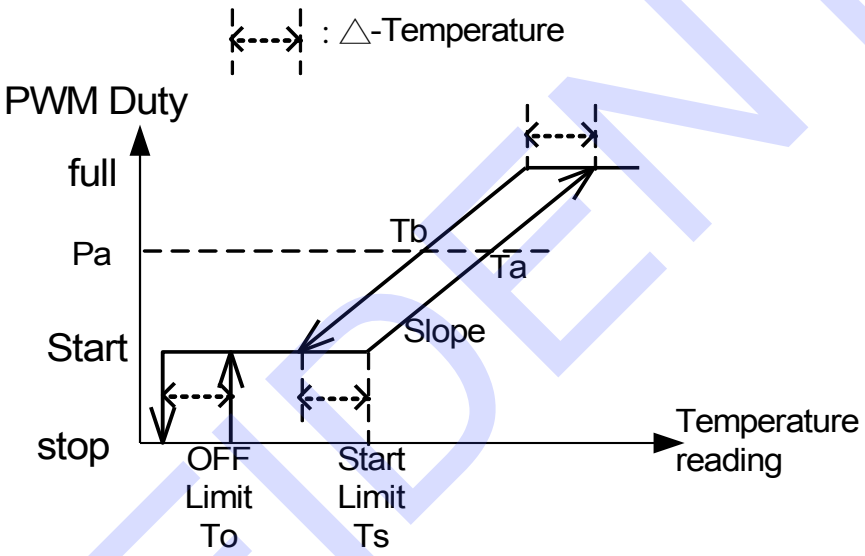

CONFIDENTIAL

9.7.3.8 External Thermal Sensor Programming Procedure

Figure 9-8. PECI Programming Procedure

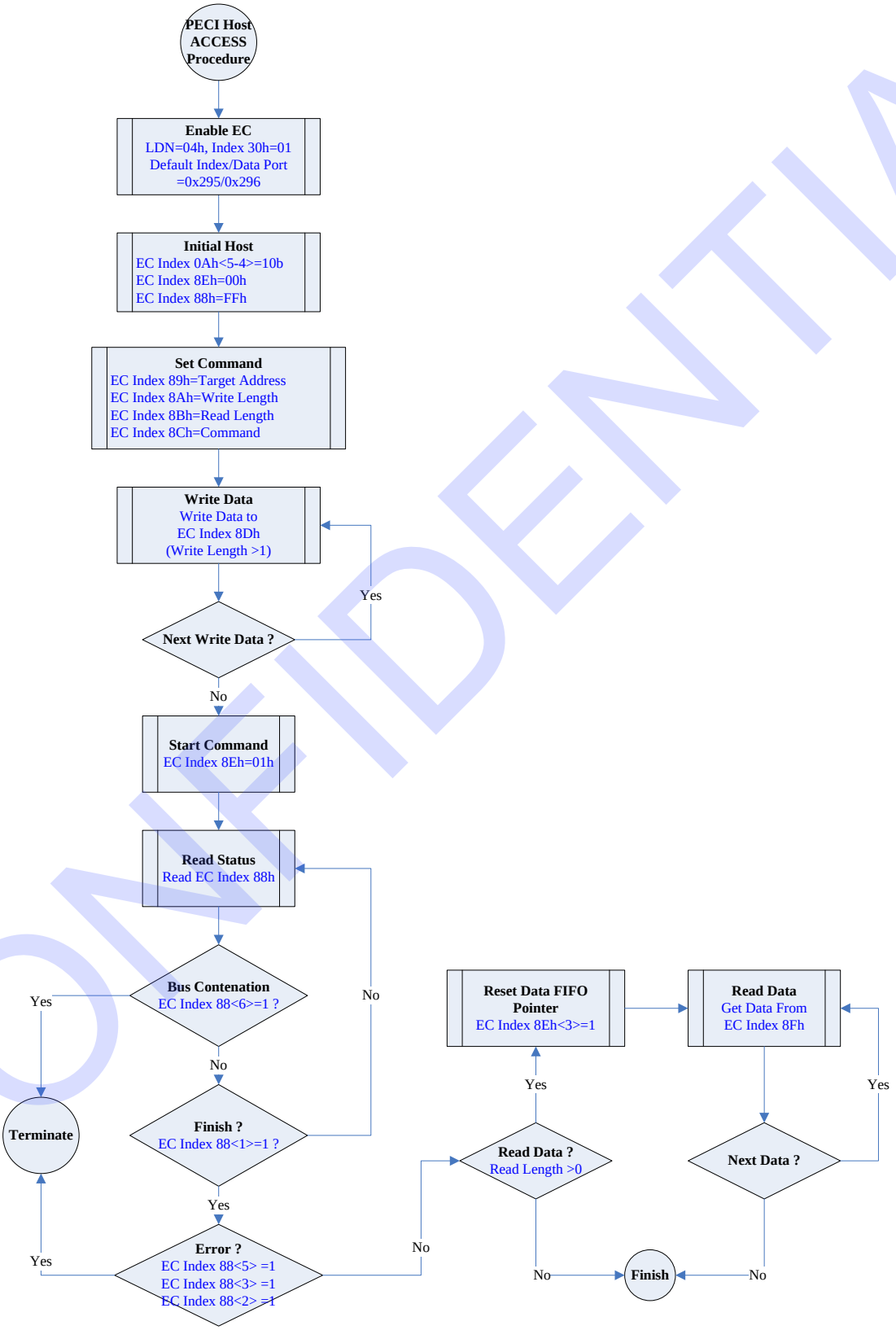

CONFIDENTIAL

Figure 9-9. PECI Host Programming Procedure

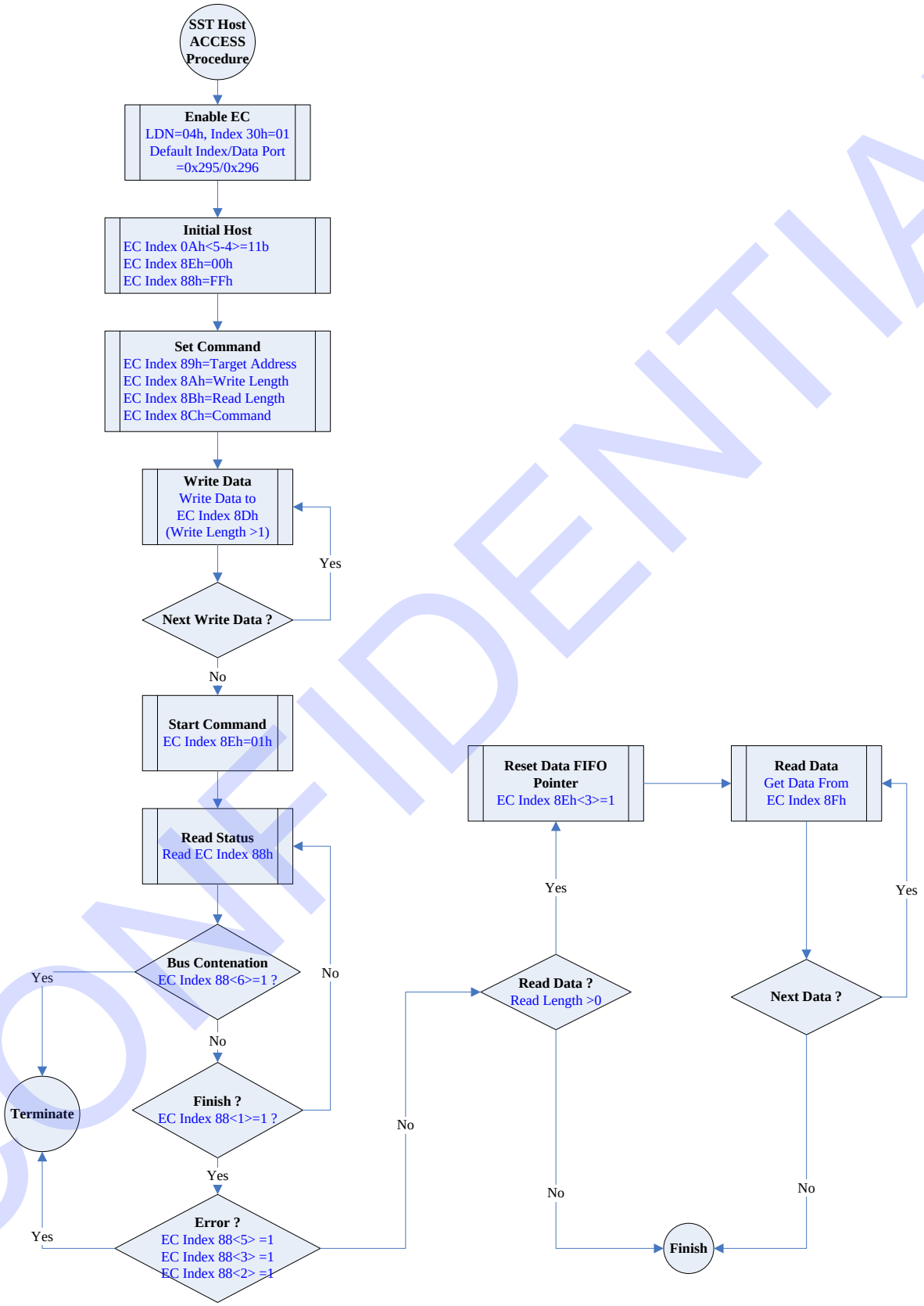

CONFIDENTIAL

Figure 9-10. SMBUS Host Programming Procedure

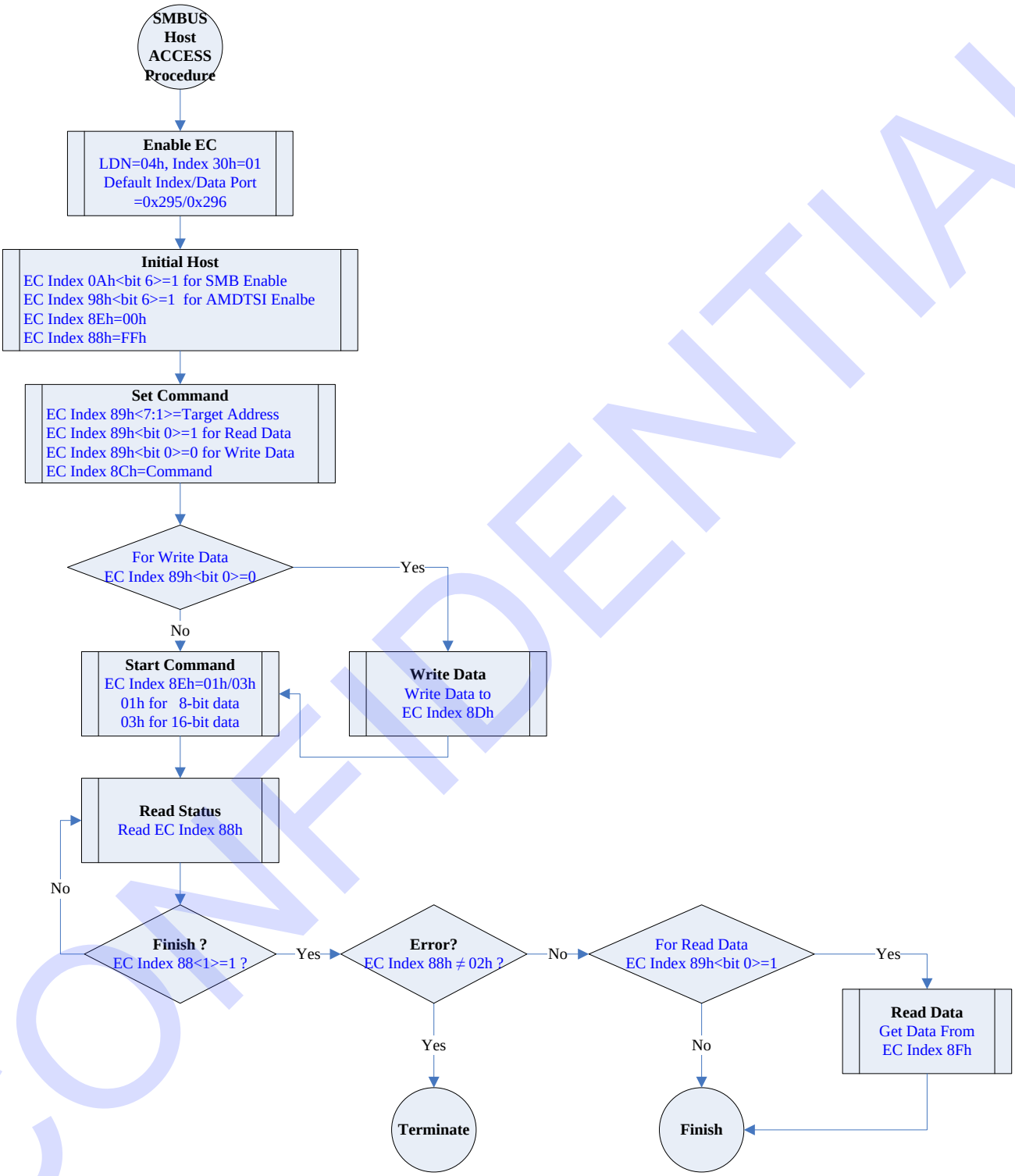

CONFIDENTIAL

Figure 9-11. SB-TSI Host Programming Procedure

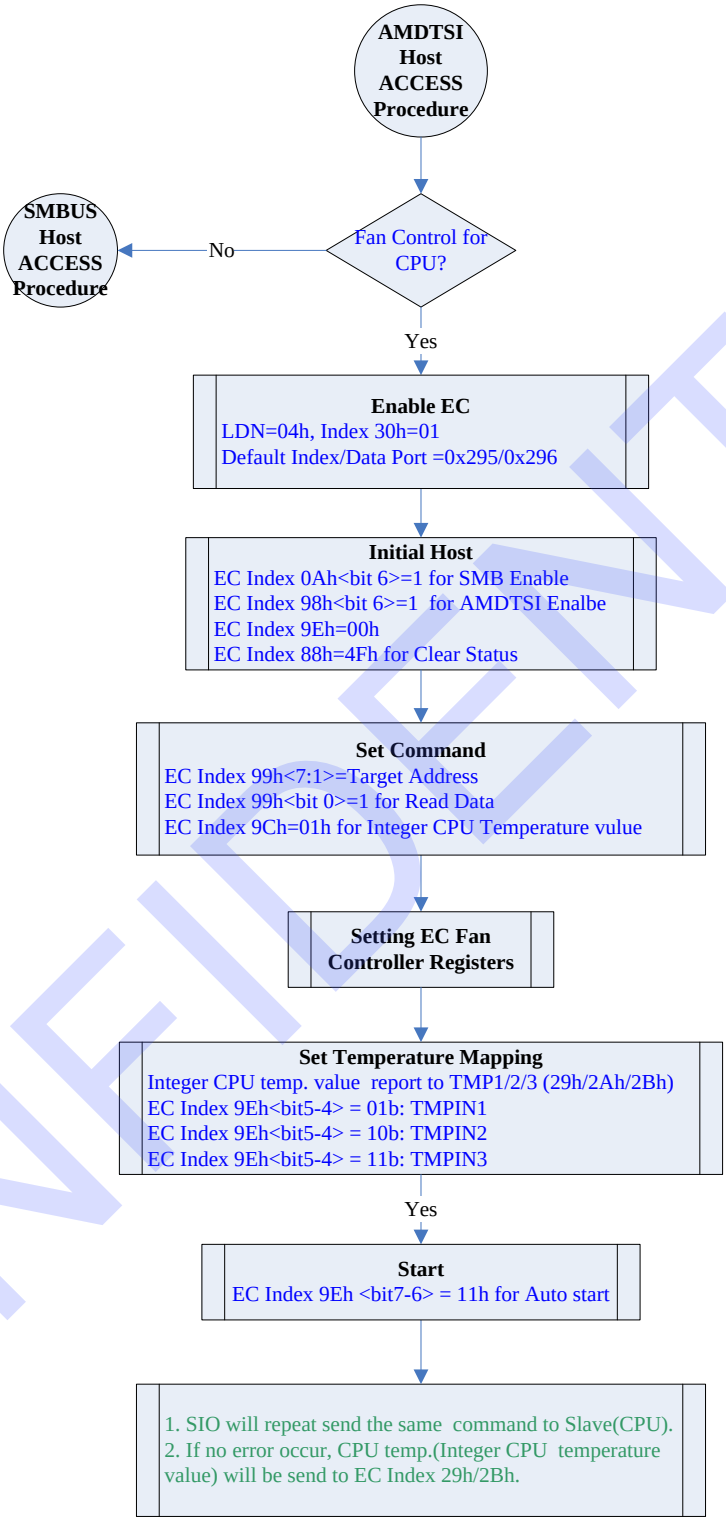

CONFIDENTIAL

Figure 9-12. PCH SM-Link Programming Procedure

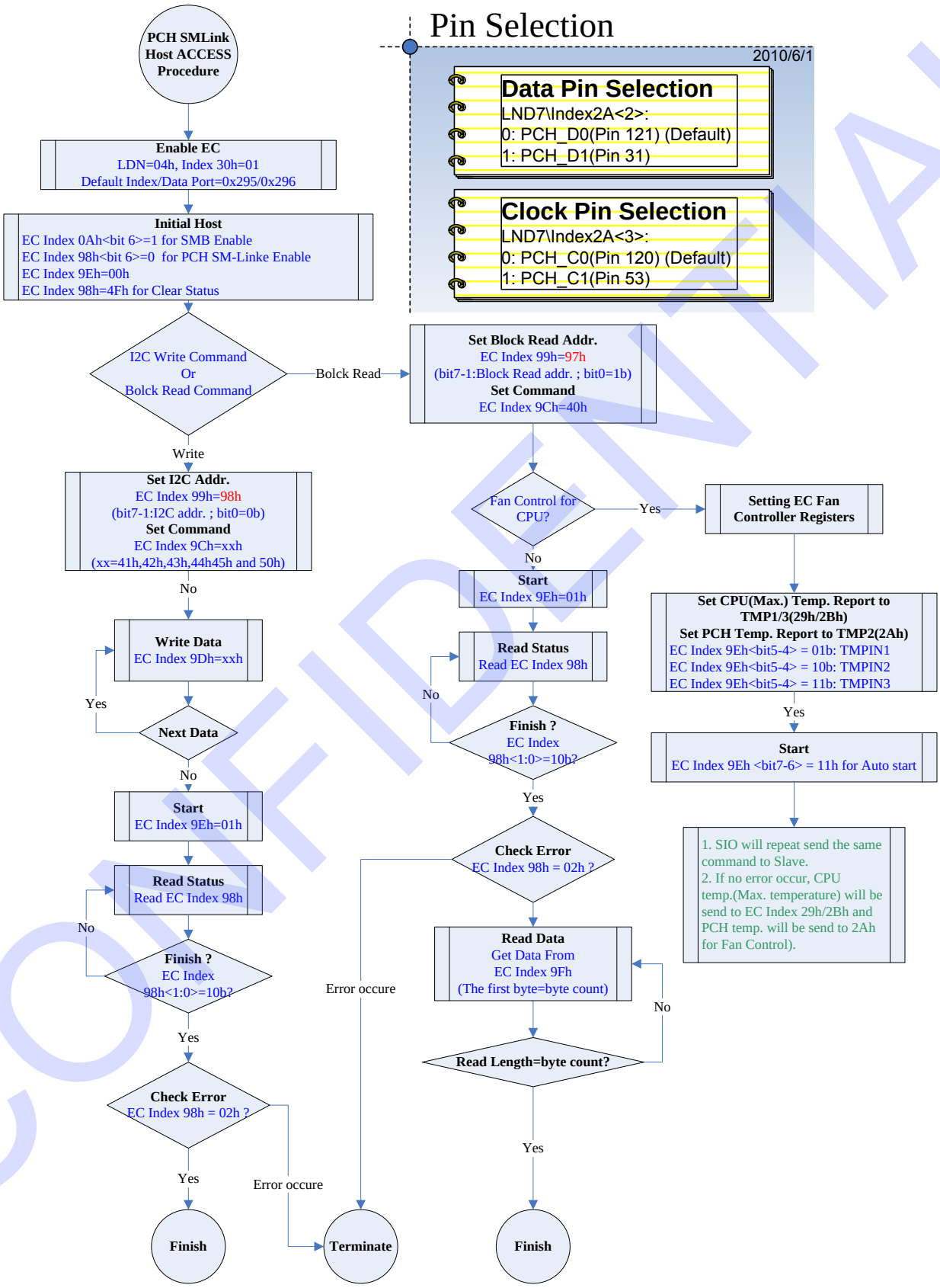

CONFIDENTIAL

9.8 Serial Port (UART)

The IT8786E-I incorporates six enhanced serial ports that perform serial to parallel conversion on received data, and parallel to serial conversion on transmitted data. Each of the serial channels individually contains a programmable baud rate generator which is capable of dividing the input clock by a number ranging from 1 to 65535. The data rate of each serial port can be programmed from 115.2K baud down to 50 baud as well. The character options are programmable for 1 start bit; 1, 1.5 or 2 stop bits; even, odd, stick or no parity; and privileged interrupts. IT8786E-I supports 128 bytes RX FIFO depths and 16 byes TX FIFO depths.

Table 9-3. Serial Channel Registers

Register	DLAB*	Address	READ	WRITE
Data	0	Base + 0h	RBR (Receiver Buffer Register)	TBR (Transmitter Buffer Register)
Control	0	Base + 1h	IER (Interrupt Enable Register)	IER
	x	Base + 2h	IIR (Interrupt Identification Register)	FCR (FIFO Control Register)
	x	Base + 3h	LCR (Line Control Register)	LCR
	x	Base + 4h	MCR (Modem Control Register)	MCR
	1	Base + 0h	DLL (Divisor Latch LSB)	DLL
	1	Base + 1h	DLM (Divisor Latch MSB)	DLM
Status	x	Base + 5h	LSR (Line Status Register)	LSR
	x	Base + 6h	MSR (Modem Status Register)	MSR
	x	Base + 7h	SCR (Scratch Pad Register)	SCR

* DLAB is bit 7 of the Line Control Register.

9.8.1 Data Register

The TBR and RBR individually hold five to eight data bits. If the transmitted data are less than eight bits, it aligns to the LSB. Either received or transmitted data are buffered by a shift register, and are latched first by a holding register. Bit 0 of any word is first received and transmitted.

9.8.1.1 Receiver Buffer Register (RBR) (Read only, Address offset=0, DLAB=0)

This register receives and holds the incoming data. It contains a non-accessible shift register which converts the incoming serial data stream into a parallel 8-bit word.

9.8.1.2 Transmitter Buffer Register (TBR) (Write only, Address offset=0, DLAB=0)

This register holds and transmits the data via a non-accessible shift register, and converts the outgoing parallel data into a serial stream before data transmission.

CONFIDENTIAL

9.8.2 Control Register

9.8.2.1 Interrupt Enable Register (IER) (Read/Write, Address offset=1, DLAB=0)

The IER is to enable or disable four active high interrupts which activate the interrupt outputs with its lower four bits: IER(0), IER(1), IER(2), and IER(3).

Bit	Default	Description
7-4	-	**Reserved**
3	0	**Enable Modem Status Interrupt** Set this bit high to enable the modem status interrupt when one of the modem status registers changes its bit status.
2	0	**Enable Receiver Line Status Interrupt** Set this bit high to enable the receiver line status interrupt, which happens when overrun, parity, framing or break occurs.
1	0	**Enable Transmitter Holding Register Empty Interrupt** Set this bit high to enable the transmitter holding register empty interrupt.
0	0	**Enable Received Data Available Interrupt** Set this bit high to enable the received data available interrupt and time-out interrupt in the FIFO mode.

9.8.2.2 **Interru**pt **Identification** Register (IIR) (Read only, Address offset=2)

This register facilitates the host CPU to determine the interrupt priority and its source. The four existing interrupts are listed below in priority order.

1. Receiver Line Status (highest priority)
2. Received Data Ready
3. Transmitter Holding Register Empty
4. Modem Status (lowest priority)

When a privileged interrupt is pending and the interrupt type is stored in the IIR which is accessed by the host, the serial channel holds back all interrupts and indicates the pending interrupts with the highest priority to the host. Any new interrupts will not be acknowledged until the host access is completed. Please refer to the following table for the detail.

CONFIDENTIAL

Table 9-4. Interrupt Identification Register

FIFO Mode	Interrupt Identification Register			Interrupt Set and Reset Function			
Bit 3	**Bit 2**	**Bit 1**	**Bit 0**	**Priority**	**Interrupt Type**	**Interrupt Source**	**Interrupt Reset Control**
0	X	X	1	-	None	None	-
0	1	1	0	First	Receiver Line Status	OE, PE, FE, or BI	Read LSR
0	1	0	0	Second	Received Data Available	Received Data Available	Read RBR or FIFO drops below the trigger level
1	1	0	0	Second	Character Time-out Indication	No characters have been removed from or input to the RCVR FIFO during the last four character times and there is at least one character in it during this period.	Read RBR
0	0	1	0	Third	Transmitter Holding Register Empty	Transmitter Holding Register Empty	Read IIR if THRE is the Interrupt Source Write THR
0	0	0	0	Fourth	Modem Status	CTS#, DSR#, RI#, DCD#	Read MSR

Note: X = Not Defined

IIR(7), IIR(6): Set when FCR(0) = 1.
IIR(5), IIR(4): Always logic 0.
IIR(3): In the non-FIFO mode, this bit is a logic 0. In the FIFO mode, this bit is set along with bit 2 when a time-out Interrupt is pending.
IIR(2), IIR(1): Used to identify the highest priority interrupt pending.
IR(0): Used to indicate a pending interrupt in either a hard-wired prioritized or polled environment with a logic 0 state. In such a case, IIR contents may be used as a pointer that points to the appropriate interrupt service routine.

CONFIDENTIAL

9.8.2.3 FIFO Control Register (FCR) (Write Only, Address offset=2)

This register is used to not only enable and clear the FIFO but also set the RCVR FIFO trigger level.

Bit	Default	Description
7-6	-	**Receiver Trigger Level Selection** These bits are to set the trigger level for the RCVR FIFO interrupt.
5-4	0	**Reserved**
3	0	This bit does not affect Serial Channel operation. RXRDY and TXRDY functions are not available on this chip.
2	0	**Transmitter FIFO Reset** This self-cleared bit clears all contents of the XMIT FIFO and resets its related counter to 0 via a logic "1".
1	0	**Receiver FIFO Reset** Setting this self-cleared bit to a logic "1" will clear all contents of the RCVR FIFO and resets its related counter to "0" (except the shift register).
0	0	**FIFO Enable** XMIT and RCVR FIFOs are enabled when this bit is set high. XMIT whereas disabled and cleared respectively when this bit is cleared to low. This bit must be a logic "1" if data are written to the other bits of the FCR, or they will not be properly programmed. When this register is switched to the non-FIFO mode, all of its contents will be cleared.

Table 9-5. Receiver FIFO Trigger Level Encoding

FCR (7)	FCR (6)	RCVR FIFO Trigger Level
0	0	1 byte
0	1	4 bytes
1	0	8 bytes
1	1	14 bytes

9.8.2.4 Divisor Latches (DLL, DLM) (Read/Write, Address offset=0,1 DLAB=0)

Two 8-bit Divisor Latches (DLL and DLM) store the divisor values in a 16-bit binary format. They are loaded during initialization to generate a desired baud rate.

9.8.2.5 Baud Rate Generator (BRG)

Each serial channel contains a programmable BRG, which can take any clock input (from DC to 8 MHz) to generate standard ANSI/CCITT bit rates for the channel clocking with an external clock oscillator. The number of DLL or DLM is in 16-bit format, providing the divisor ranging from 1 to 2^{16} to obtain the desired baud rate. The output frequency is 16X data rate.

CONFIDENTIAL

Table 9-6. Baud Rate Using (24 MHz ÷ 13) Clock

Desired Baud Rate	Divisor Used
50	2304
75	1536
110	1047
134.5	857
150	768
300	384
600	192
1200	96
1800	64
2000	58
2400	48
3600	32
4800	24
7200	16
9600	12
19200	6
38400	3
57600	2
115200	1

9.8.2.6 Scratch Pad Register (Read/Write, Address offset=7)

This 8-bit register does not control the UART operation in any way. It is intended as a scratch pad register to be used by programmers to temporarily hold general purpose data.

CONFIDENTIAL

9.8.2.7 Line Control Register (LCR) (Read/Write, Address offset=3)

LCR controls the format of the data character and supplies the information of the serial line.

Bit	Default	Description
7	0	**Divisor Latch Access Bit (DLAB)** This bit must be set high to access the Divisor Latches of the baud rate generator during READ or WRITE operation whereas set low to access Data Register (refer to page 121) or Interrupt Identification Register (IIR) (Read only, Address offset=2) (refer to page 122).
6	0	**Set Break** This bit forces the Serial Output (SOUT) to the spacing state (logic 0) by a logic 1, which will be preserved until a low level resetting LCR(6), enabling the serial port to alert the terminal in a communication system.
5	0	**Stick Parity** When this bit and LCR(3) are high at the same time, the parity bit is transmitted and then detected by a receiver in an opposite state by LCR(4) to force the parity bit into a known state and to check the parity bit in a known state.
4	0	**Even Parity Selection** When the parity is enabled (LCR(3) = 1), 0: Odd parity 1: Even parity
3	0	**Parity Enable** A parity bit, located between the last data word bit and stop bit, will be generated or checked (transmit or receive data) when LCR(3) is high.
2	0	**Number of Stop Bit** This bit specifies the number of stop bits in each serial character, as summarized in Table 9-7. Stop Bit Number Encoding.
1-0	00	**Word Length Select [1:0]** 11: 8 bits 10: 7 bits 01: 6 bits 00: 5 bits

Table 9-7. Stop Bit Number Encoding

LCR (2)	Word Length	No. of Stop Bit
0	-	1
1	5 bits	1.5
1	6 bits	2
1	7 bits	2
1	8 bits	2

Note: The receiver will ignore all stop bits beyond the first, regardless of the number used in transmission.

CONFIDENTIAL

9.8.2.8 Modem Control Register (MCR) (Read/Write, Address offset=4)

This register controls the interface by the modem or data set (or device emulating a modem).

Bit	Default	Description
7	-	**Reserved**
6	0	**9-bit Multi-Drops Mode TX Adress and Data Select** 1: Address phase 0: Data phase **Note:** This bit is valid if 9-bit multi-drops mode is enabled.
5	0	**Reserved**
4	0	**Internal Loopback** This bit provides a loopback feature for diagnostic test of the serial channel when set high. Serial Output (SOUT) is set to the Marking State Shift Register output loops back into the Receiver Shift Register. All Modem Control inputs (CTS#, DSR#, RI# and DCD#) are disconnected. The four Modem Control outputs (DTR#, RTS#, OUT1 and OUT2) are internally connected to the four Modem Control inputs and forced to inactive high then the transmitted data are immediately received, allowing the processor to verify the transmitted and received data path of the serial channel.
3	0	**OUT2** The Output 2 bit enables the serial port interrupt output by a logic 1.
2	0	**OUT1** This bit does not have an output pin and can only be read or written by CPU.
1	0	**Request to Send (RTS)** This bit controls the Request to Send (RTS#), which is in an inverse logic state with that of MCR(1).
0	0	**Data Terminal Ready (DTR)** This bit controls the Data Terminal Ready (DTR#), which is in an inverse logic state with that of the MCR(0).

CONFIDENTIAL

9.8.3 Status Registers

9.8.3.1 Line Status Register (LSR) (Read/Write, Address offset=5)

This register provides the status indication and is usually the first register read by the CPU to determine the cause of an interrupt or to poll the status of each serial channel. The contents of the LSR are described below:

Bit	Default	Description
7	0	**Error in Receiver FIFO** In the 16450 mode, this bit is always 0. In the FIFO mode, it is set high when there is at least one parity error, framing or break interrupt in the FIFO. This bit is cleared when the CPU reads the LSR if there are no subsequent errors in the FIFO.
6	1	**Transmitter Empty** This **read only** bit indicates that the Transmitter Holding Register and Transmitter Shift Register are both empty. Otherwise, this bit is "0" and has the same function as that in the FIFO mode.
5	1	**Transmitter Holding Register Empty (THRE)** This **read only** bit indicates that the TBR is empty and is ready to accept a new character for transmission. It is set high when a character is transferred from the THR into the Transmitter Shift Register, causing a priority 3 IIR interrupt which is cleared by a read of IIR. In the FIFO mode, it is set when the XMIT FIFO is empty, and is cleared when at least one byte is written to the XMIT FIFO.
4	0	**Line Break** The Line Break (LB) Interrupt status bit indicates that the last character received is a break character, which is invalid but complete. It includes parity and stop bits. This situation occurs when the received data input is held in the spacing (logic 0) for longer than a full word transmission time (start bit + data bits + parity + stop bit). When any of these error conditions is detected (LSR(1) to LSR(4)), a Receiver Line Status interrupt (priority 1) will be generated in IIR, with bit 2 of Interrupt Enable Register (IER) (Read/Write, Address offset=1, DLAB=0) previously enabled(refer to page 122).
3	0	**Framing Error (FE)** A logic 1 indicates that the stop bit in the received character is not valid. It will be reset low when CPU reads the contents of the LSR.
2	0	**Parity Error (PE)** A logic 1 indicates that the received data character does not have the correct even or odd parity, as selected by LCR(4). It will be reset to "0" whenever LSR is read by CPU.
1	0	**Overrun Error (OE)** A logic 1 indicates that the RBR has been overwritten by the next character before it had been read by the CPU. In the FIFO mode, OE occurs when FIFO is full and the next character has been completely received by the Shift Register. It will be reset when LSR is read by the CPU.
0	0	**Data Ready** A logic 1 indicates a character has been received by RBR. A logic 0 indicates all the data in RBR or RCVR FIFO have been read.

CONFIDENTIAL

9.8.3.2 Modem Status Register (MSR) (Read/Write, Address offset=6)

This 8-bit register indicates the current state of the control lines with modems or the peripheral devices in addition to this current state information. Four of these eight bits, MSR(4) - MSR(7), can provide the state change information when the modem control input changes the state. It is reset low when the host reads the MSR.

Bit	Default	Description
7	0	**Data Carrier Detect(DCD)** This bit indicates the complement status of Data Carrier Detect (DCD#) input. If MCR(4) = 1, MSR(7) is equivalent to OUT2 of the MCR.
6	0	**Ring Indicator(RI)** This bit indicates the complement status to the RI# input. If MCR(4)=1, MSR(6) is equivalent to OUT1 in the MCR.
5	0	**Data Set Ready(DSR)** This bit indicates that the modem is ready to provide received data to the serial channel receiver circuitry. If the serial channel is in the loop mode (MCR(4) = 1), MSR(5) is equivalent to DTR# of MCR.
4	0	**Clear to Send(CTS)** This bit indicates the complement of CTS# input. When the serial channel is in the Loop mode (MCR(4)=1), MSR(5) is equivalent to RTS# of MCR.
3	0	**Delta Data Carrier Detect(DDCD)** This bit indicates that the DCD# input state has been changed since being read by the host last time.
2	0	**Trailing Edge Ring Indicator(TERI)** This bit indicates that the RI input state to the serial channel has been changed from low to high since being read by the host last time. The change in a logic “1” does not activate the TERI.
1	0	**Delta Data Set Ready(DDSR)** A logic "1" indicates that the DSR# input state to the serial channel has been changed since being read by the host last time.
0	0	**Delta Clear to Send(DCTS)** This bit indicates the CTS# input to the chip has changed the state since MSR was read last time.

CONFIDENTIAL

9.8.4 Reset

The reset of the IT8786E-I should be held to an idle mode reset high for 500 ns until initialization, which causes the initialization of the internal clock counters of transmitter and receiver.

Table 9-8. Reset Control of Register and Pinout Signal

Register/Signal	Reset Control	Reset Status
Interrupt Enable Register	Reset	All bits Low
Interrupt Identification Register	Reset	Bit 0 is high and bits 1-7 are low
FIFO Control Register	Reset	All bits Low
Line Control Register	Reset	All bits Low
Modem Control Register	Reset	All bits Low
Line Status Register	Reset	Bits 5 and 6 are high, others are low
Modem Status Register	Reset	
SOUT1, SOUT2	Reset	Bits 0-3 low, bits 4-7 input signals
RTS1#, RTS2#, DTR1#, DTR2#	Reset	High
IRQ of Serial Port	Reset	High
		High Impedance

9.8.5 Programming

Each serial channel of the IT8786E-I is programmed by control registers, whose contents define the character length, number of stop bits, parity, baud rate and modem interface. Even though these control registers can be written in any given order, IER should be the last register written because it controls whether the interrupt is enabled or not. After the port is programmed, these registers still can be updated whenever the port does not transfer data.

9.8.6 Software Reset

This approach allows the serial port to return to a completely known state without a system reset. It is achieved by writing the required data to LCR, DLL, DLM and MCR. LSR and RBR must be read before interrupts are enabled to clear out any residual data or status bits that may be invalid for subsequent operations.

9.8.7 Clock Input Operation

The input frequency of the Serial Channel is 24 MHz ÷ 13, not exactly 1.8432 MHz.

9.8.8 FIFO Interrupt Mode Operation

(1) RCVR Interrupt

By setting bit 0 of FIFO Control Register (FCR) (Write Only, Address offset=2) (refer to page 124) and bit 0 of Interrupt Enable Register (IER) (Read/Write, Address offset=1, DLAB=0) (refer to page 122) high, the RCVR FIFO and receiver interrupts are enabled. The RCVR interrupt occurs under the following conditions:

The receive data available interrupt will be issued only when the FIFO has reached its programmed trigger level and cleared as soon as the FIFO drops below its trigger level.

The receiver line status interrupt has higher priority over the received data available interrupt.

The time-out timer will be reset after receiving a new character or after the host reads RCVR FIFO whenever a time-out interrupt occurs. The timer will be reset when the host reads one character from RCVR FIFO.

CONFIDENTIAL

CONFIDENTIAL

For the RCVR FIFO time-out interrupt, it will occur under the following conditions by enabling the RCVR FIFO and receiver interrupts:

The RCVR FIFO time-out interrupt will occur only if there is at least one character in FIFO whenever the interval between the most recently received serial character and the most recent Host READ from the FIFO is longer than four consecutive character times.

The time-out timer will be reset after receiving a new character or after the host reads RCVR FIFO whenever a time-out interrupt occurs. The timer will be reset when the host reads one character from RCVR FIFO.

(2) XMIT Interrupt

By setting bit 0 of FIFO Control Register (FCR) (Write Only, Address offset=2) (refer to page 124) and bit 1 of Interrupt Enable Register (IER) (Read/Write, Address offset=1, DLAB=0) (refer to page 122) high, the XMIT FIFO and transmitter interrupts are enabled. The XMIT interrupt occurs under the following conditions:

a. The transmitter interrupt occurs when the XMIT FIFO is empty, and it will be reset if the THR is written or the IIR is read.

b. The transmitter FIFO empty indications will be delayed for one character time minus the last stop bit time whenever the following condition occurs:

   THRE = 1 and there have not been at least two bytes in the transmitter FIFO at the same time since the last THRE = 1. The transmitter interrupt after changing FCR(0) will be immediate if it is enabled. Once the first transmitter interrupt is enabled, the THRE indication will be delayed for one character time minus the last stop bit time.

The character time-out and RCVR FIFO trigger level interrupts have the same priority as the received data available interrupt. The XMIT FIFO empty has the same priority as the transmitter holding register empty interrupt.

FIFO Polled Mode Operation [FCR(0)=1, and IER(0), IER(1), IER(2), IER(3) or all are 0].

Either or both XMIT and RCVR can be in this operation mode. The operation mode can be programmed by users and is responsible for checking the RCVR and XMIT status via LSR described below:

LSR(7): RCVR FIFO error indication
LSR(6): XMIT FIFO and Shift register empty
LSR(5): The XMIT FIFO empty indication
LSR(4) - LSR(1): Specify that errors have occurred. The character error status is handled in the same way as that in the interrupt mode. The IIR is not affected since IER(2)=0.
LSR(0): High whenever RCVR FIFO contains at least one byte.
No trigger level is reached or time-out condition indicated in FIFO Polled Mode.

CONFIDENTIAL

9.9 Parallel Port

The IT8786E-I incorporates one multi-mode high performance parallel port, which supports the IBM AT, PS/2 compatible bi-directional Standard Parallel Port (SPP), the Enhanced Parallel Port (EPP) and the Extended Capabilities Port (ECP). For enabling/disabling, changing the base address of the parallel port, and operation mode selection, please refer to section 0 configuration registers on page 55 for the detail.

Table 9-9. Parallel Port Connector in Different Modes

Host Connector	SPP	EPP	ECP
1	STB#	WRITE#	NStrobe
2-9	PD0 - 7	PD0 - 7	PD0 - 7
10	ACK#	INTR	nAck
11	BUSY	WAIT#	Busy PeriphAck(2)
12	PE	(NU) (1)	PError nAckReverse(2)
13	SLCT	(NU) (1)	Select
14	AFD#	DSTB#	nAutoFd HostAck(2)
15	ERR#	(NU) (1)	nFault nPeriphRequest(2)
16	INIT#	(NU) (1)	nInit nReverseRequest(2)
17	SLIN#	ASTB#	nSelectIn

Note 1: NU: Not used
Note 2: Fast mode
Note 3: For more information, please refer to the IEEE 1284 standard.

9.9.1 SPP and EPP Mode

Table 9-10. Address Map and Bit Map for SPP and EPP Mode

Register	Address	I/O	D0	D1	D2	D3	D4	D5	D6	D7	Mode
Data Port	Base 1+0h	R/W	PD0	PD1	PD2	PD3	PD4	PD5	PD6	PD7	SPP/EPP
Status Port	Base 1+1h	R	TMOUT	1	1	ERR#	SLCT	PE	ACK#	BUSY#	SPP/EPP
Control Port	Base 1+2h	R/W	STB	AFD	INIT	SLIN	IRQE	PDDIR	1	1	SPP/EPP
EPP Address Port	Base 1+3h	R/W	PD0	PD1	PD2	PD3	PD4	PD5	PD6	PD7	EPP
EPP Data Port 0	Base 1+4h	R/W	PD0	PD1	PD2	PD3	PD4	PD5	PD6	PD7	EPP
EPP Data Port 1	Base 1+5h	R/W	PD0	PD1	PD2	PD3	PD4	PD5	PD6	PD7	EPP
EPP Data Port 2	Base 1+6h	R/W	PD0	PD1	PD2	PD3	PD4	PD5	PD6	PD7	EPP
EPP Data Port 3	Base 1+7h	R/W	PD0	PD1	PD2	PD3	PD4	PD5	PD6	PD7	EPP

Note 1: The Base address 1 depends on the Logical Device configuration registers of Parallel Port (0X60, 0X61).

CONFIDENTIAL

9.9.1.1 Data Port Register (Base Address 1 **+ 00h)**

This is a bi-directional 8-bit data port. The direction of data flow is determined by bit 5 of the logic state of Control Port Register (Base Address 1 + 02h), which forwards the direction when the bit is low (0) whereas reverses the direction when the bit is high (1).

9.9.1.2 **Status Port** Register **(Base Address 1 + 01h)**

This is a **read only** register. Writing data to this register has no effects. The contents of this register are latched during an IOR cycle.

Bit 7: BUSY#
Inverse of printer BUSY signal; a logic "0" means that the printer is busy and cannot accept another character whereas a logic "1" means that it is ready to accept the next character.
Bit 6: ACK#
Printer acknowledge; a logic "0" means that the printer has received a character and is ready to accept another whereas a logic "1" means that it is still processing the last character.
Bit 5: PE
Paper end; a logic "1" indicates the paper end.
Bit 4: SLCT
Printer selected; a logic "1" means that the printer is on line.
Bit 3: ERR#
Printer error signal; a logic "0" means an error has been detected.
Bits 2-1: Reserved
These bits are always "1" at read.
Bit 0: TMOUT
This bit is valid only in the EPP mode and indicates that a 10-msec time-out has occurred in EPP operation. A logic "0" means no time-out occurs whereas a logic “1” means that a time-out error has been detected. This bit is cleared by an LRESET# or by writing a logic “1” to it. When the chip is selected as the non-EPP mode (SPP or ECP), this bit is always a logic "1" at read.

9.9.1.3 **Control Port** Register **(Base Address 1 + 02h)**

This is a **read/write** register and the port provides all output signals to control the printer.
Bit 7-6: Reserved
These two bits are always "1" at read.
Bit 5: PDDIR
Data port direction control. This bit determines the direction of the data port register. Set this bit "0" to output the data port to PD bus whereas "1" to input from PD bus.
Bit 4: IRQE
Interrupt request enable. Setting this bit "1" enables the interrupt request from the parallel port to the host. An interrupt request is generated by a "0" to "1" transition of the ACK# signal.
Bit 3: SLIN
Inverse of SLIN# pin; setting this bit to "1" selects the printer.
Bit 2: INIT
Initiate printer; setting this bit to "0" initializes the printer.
Bit 1: AFD
Inverse of the AFD# pin; setting this bit to "1" causes the printer to automatically advance one line after each line is printed.
Bit 0: STB
Inverse of the STB# pin; this pin controls the data strobe signal to the printer.

CONFIDENTIAL

9.9.1.4 EPP Address Port Register (Base Address 1 + 03h)

The EPP Address Port is only available in the EPP mode. When the host writes data to this port, the contents of D0 -D7 are buffered and output to PD0 - PD7. The leading edge of IOW (Internal signal, active when LPC I/O WRITE cycle is at this address) causes an EPP ADDRESS WRITE cycle. When the host reads data from this port, the contents of PD0 - PD7 are read. The leading edge of IOR (Internal signal, active when LPC I/O READ cycle is at this address) causes an EPP ADDRESS READ cycle.

9.9.1.5 EPP Data Port 0-3 Register (Base Address 1 + 04-07h)

The EPP Data Ports are only available in the EPP mode. When the host writes data to these ports, the contents of D0 - D7 are buffered and output to PD0 - PD7. The leading edge of IOW (Internal signal, active when LPC I/O WRITE cycle is at this address) causes an EPP DATA WRITE cycle. When the host reads data from these ports, the contents of PD0 - PD7 are read. The leading edge of IOR (Internal signal, active when LPC I/O READ cycle is at this address) causes an EPP DATA READ cycle.

9.9.2 EPP Mode Operation

When the parallel port of the IT8786E-I is set in the EPP mode, the SPP mode is also available. If no EPP Address/Data Port address is decoded (Base address + 03h- 07h), the PD bus is in the SPP mode, and the output signals such as STB#, AFD#, INIT#, and SLIN# are set by Control Port Register (Base Address 1 + 02h) (refer to page 140). The direction of the data port is controlled by bit 5 of Control Port Register (Base Address 1 + 02h). There is a 10-msec time required to prevent the system from lockup. The time has elapsed from the beginning of the IOCHRDY (Internal signal: When active, the IT8786E-I will issue Long Wait in SYNC field) high (EPP READ/WRITE cycle) to WAIT# being de-asserted. If a time-out occurs, the current EPP READ/WRITE cycle will be aborted and a logic "1" will be read from bit 0 of Status Port Register (Base Address 1 + 01h) (refer to page 140). The host must write 0 to bit 0, 1, 3 of Control Port Register (Base Address 1 + 02h) before any EPP READ/WRITE cycle (EPP spec.). Pin STB#, AFD# and SLIN# are controlled by hardware for the hardware handshaking during EPP READ/WRITE cycle.

9.9.2.1 EPP ADDRESS WRITE

1. The host writes a byte to the EPP Address Port (Base address + 03h). The chip drives D0 - D7 onto PD0 - PD7.
2. The chip asserts WRITE# (STB#) and ASTB# (SLIN#) after IOW becomes active.
3. The peripheral de-asserts WAIT#, indicating that the chip may begin the termination of this cycle. Then, the chip de-asserts ASTB#, latches the address from D0 - D7 to PD bus, allowing the host to complete the I/O WRITE cycle.
4. The peripheral asserts WAIT#, indicating that it acknowledges the termination of the cycle. Then, the chip de-asserts WRITE to terminate the cycle.

9.9.2.2 EPP ADDRESS READ

1. The host reads a byte from the EPP Address Port. The chip drives PD bus to tri-state for the peripheral to drive.
2. The chip asserts ASTB# after IOR becomes active.
3. The peripheral drives the PD bus valid and de-asserts WAIT#, indicating that the chip may begin the termination of this cycle. Then, the chip de-asserts ASTB#, latches the address from PD bus to D0 -D7, allowing the host to complete the I/O READ cycle.
4. The peripheral drives the PD bus to tri-state and then asserts WAIT#, indicating that it acknowledges the termination of the cycle.

CONFIDENTIAL

9.9.2.3 EPP DATA WRITE

1. The host writes a byte to the EPP Data Port (Base address +04h - 07h). The chip drives D0- D7 onto PD0 -PD7.
2. The chip asserts WRITE# (STB#) and DSTB# (AFD#) after IOW becomes active.
3. The peripheral de-asserts WAIT#, indicating that the chip may begin the termination of this cycle. Then, the chip de-asserts DSTB#, latches the data from D0 - D7 to the PD bus, allowing the host to complete the I/O WRITE cycle.
4. The peripheral asserts WAIT#, indicating that it acknowledges the termination of the cycle. Then, the chip de-asserts WRITE to terminate the cycle.

9.9.2.4 EPP DATA READ

1. The host reads a byte from the EPP DATA Port (Base address +04h - 07h). The chip drives PD bus to tri-state for the peripheral to drive.
2. The chip asserts DSTB# after IOR becomes active.
3. The peripheral drives PD bus valid and de-asserts WAIT#, indicating that the chip may begin the termination of this cycle. Then, the chip de-asserts DSTB#, latches the data from PD bus to D0 - D7, allowing the host to complete the I/O READ cycle.
4. The peripheral tri-states the PD bus and then asserts WAIT#, indicating that it acknowledges the termination of the cycle.

9.9.3 ECP Mode Operation

This mode is both software and hardware compatible with the existing parallel ports, allowing ECP to be used as a standard LPT port when the ECP mode is not required. It provides an automatic high-burst-bandwidth channel that supports the DMA or ECP mode in both forward and reverse directions. A 16-byte FIFO is implemented in both forward and reverse directions to smooth data flow and enhance the maximum bandwidth requirement allowed. The port supports automatic handshaking for the standard parallel port to improve compatibility and expedite the mode transfer. It also supports hardware run-length encoded (RLE) decompression. Compression is accomplished by counting identical bytes and transmitting an RLE byte that indicates how many times a byte has been repeated. The IT8786E-I does not support hardware RLE compression. For the detailed description, please refer to "Extended Capabilities Port Protocol and ISA Interface Standard".

Table 9-11. Bit Map of ECP Register

Register	D7	D6	D5	D4	D3	D2	D1	D0
data	PD7	PD6	PD5	PD4	PD3	PD2	PD1	PD0
ecpAFifo	Addr/RLE	Address or RLE field						
dsr	nBusy	nAck	PError	Select	nFault	1	1	1
dcr	1	1	PDDIR	IRQE	SelectIn	nInit	AutoFd	Strobe
cFifo	Parallel Port Data FIFO							
ecpDFifo	ECP Data FIFO							
tFifo	Test FIFO							
cnfgA	0	0	0	1	0	0	0	0
cnfgB	0	intrValue	0	0	0	0	0	0
ecr	mode			nErrIntrEn	dmaEn	ServiceIntr	full	empty

CONFIDENTIAL

9.9.3.1 ECP Register Definition

Name	Address	I/O	ECP Mode	Function
data	Base 1 +000h	R/W	000-001	Data Register
ecpAFifo	Base 1 +000h	R/W	011	ECP FIFO (Address)
dsr	Base 1 +001h	R/W	All	Status Register
dcr	Base 1 +002h	R/W	All	Control Register
cFifo	Base 2 +000h	R/W	010	Parallel Port Data FIFO
ecpDFifo	Base 2 +000h	R/W	011	ECP FIFO (DATA)
tFifo	Base 2 +000h	R/W	110	Test FIFO
cnfgA	Base 2 +000h	R	111	Configuration Register A
cnfgB	Base 2 +001h	R	111	Configuration Register B
ecr	Base 2 +002h	R/W	All	Extended Control Register

Note 1: Base address 1 depends on Parallel Port Primary Base Address MSB Register (Index=60h, Default=03h) and Parallel Port Primary Base Address LSB Register (Index=61h, Default=78h) (refer to page 56 and 56).

Note 2: Base address 2 depends on the Parallel Port Secondary Base Address MSB Register (Index=62h, Default=07h) and Parallel Port Secondary Base Address LSB Register (Index=63h, Default=78h) (refer to page 56 and 56).

9.9.3.2 ECP Mode Description

Mode	Description
000	Standard Parallel Port Mode
001	PS/2 Parallel Port Mode
010	Parallel Port FIFO Mode
011	ECP Parallel Port Mode
110	Test Mode
111	Configuration Mode

Note: For the mode selection, please refer to ECP Register Definition on page 143 for the detail.

CONFIDENTIAL

9.9.3.3 ECP Pin Description

Name	Attribute	Description
nStrobe (HostClk)	O	Used for handshaking with Busy to write data and addresses into the peripheral device
PD0-PD7	I/O	Address or data or RLE data
nAck (PeriphClk)	I	Used for handshaking with nAutoFd to transfer data from the peripheral device to the host
Busy (PeriphACK)	I	The peripheral uses this signal for flow control in the forward direction (handshaking with nStrobe) whereas for determining whether a command or data information is present on PD0-PD7 in the reverse direction.
Perror (nAckReverse)	I	Used to acknowledge nInit from the peripheral which drives this signal low, allowing the host to drive the PD bus
Select	I	Printer On-Line Indication
nAutoFd (HostAck)	O	This signal is used for handshaking between the nAck and the host in the reverse direction. A peripheral data byte is requested when it is asserted. This signal is to determine whether a command or data information is present on PD0-PD7 in the forward direction.
nFault (nPeriphRequest)	I	For the forward direction (only), the peripheral is allowed (but not required) to assert this signal (low) to request a reverse transfer while entering the ECP mode. The signal provides a mechanism for peer-to-peer communication. It is typically used to generate an interrupt to the host, which has the ultimate control over the transfer direction.
nInit (nReverseRequest)	O	The host may drive this signal low to make the PD bus in the reverse direction. The peripheral is permitted to drive the PD bus when nInit is low and nSelectIn high in the ECP mode.
NSelectIn (1284 Active)	O	Always inactive (high) in the ECP mode.

9.9.3.4 Data Port (Base 1+00h, Modes 000 and 001)

Its contents will be cleared by a reset. The contents of the LPC data fields are latched by the Data Register then sent without being inverted to PD0-PD7 in **write** operation whereas the contents of data ports are read and sent to the host in **read** operation.

9.9.3.5 ecpAFifo Port (Address/RLE) (Base 1 +00h, Mode 011)

Any data bytes written to this port are placed in FIFO and tagged as an ECP Address/RLE. The hardware then automatically sends these data to the peripheral. Operation of this port is valid only in the forward direction (dcr(5)=0).

9.9.3.6 Device Status Register (dsr) (Base 1 +01h, Mode All)

Bit 2-0 of this register are not implemented. The states of these bits remain high in **read** operation of the Printer Status Register.

dsr(7): This bit is the inverted level of the Busy input.
dsr(6): This bit is the state of the nAck input.
dsr(5): This bit is the state of the PError input.
dsr(4): This bit is the state of the Select input.
dsr(3): This bit is the state of the nFault input.
dsr(2)-dsr(0): These bits are always 1.

CONFIDENTIAL

9.9.3.7 Device Control Register (dcr) (Base 1+02h, Mode All)

There is no function porivided by bit 7-6 of this register, which are r**ead only** and set high in **read** operation. Contents of bit 5-0 are initialized to 0 when the RESET pin is active.

dcr(7)-dcr(6): These two bits are always high.
dcr(5): Except in mode 000 and 010, setting this bit low means that the PD bus is in output operation whereas setting it high means that it is in input operation. This bit will be forced to low in mode 000.
dcr(4): Setting this bit high enables the interrupt request from peripheral to the host due to a rising edge of the nAck input.
dcr(3): This bit is inverted and output to SelectIn.
dcr(2): This bit is output to nInit without inversion.
dcr(1): This bit is inverted and output to nAutoFd.
dcr(0): This bit is inverted and output to nStrobe.

9.9.3.8 Parallel Port Data FIFO (cFifo) (Base 2+00h, Mode 010)

Bytes written or DMA transferred from the host to this FIFO are sent by a hardware handshaking to the peripheral according to the Standard Parallel Port protocol. This operation is only defined for the forward direction.

9.9.3.9 ECP Data FIFO (ecpDFifo) (Base 2+00h, Mode 011)

When the direction bit dcr(5) is 0, bytes written or DMA transferred from the host to this FIFO are sent by hardware handshaking to the peripheral according to the ECP parallel port protocol. When dcr(5) is 1, data bytes from the peripheral to this FIFO are read in an automatic hardware handshaking. The host can receive these bytes by performing **read** operations or DMA transfer from this FIFO.

9.9.3.10 Test FIFO (tFifo) (Base 2+00h, Mode 110)

The host may operate READ/WRITE or DMA transfer to this FIFO in any directions. Data in this FIFO will be displayed on the PD bus without using hardware protocol handshaking. The tFifo will not accept new data after it is full. Operating READ from an empty tFifo causes the last data byte to return.

9.9.3.11 Configuration Register A (cnfgA) (Base 2+00h, Mode 111)

This **read only** register indicates to the system that interrupts are ISA-Pulses compatible. This is an 8-bit implementation by returning a 10h.

9.9.3.12 Configuration Register B (cnfgB) (Base 2+01h, Mode 111)

This register is **read only**.

cnfgB(7): A logic “0” read indicates that the chip does not support hardware RLE compression.
cnfgB(6): Reserved.
cnfgB(5)-cnfgB(3): A value read indicates the interrupt level.
cnfgB(2)-cnfgB(0): A value read indicates that the DMA channel is set to 8-bit DMA.

CONFIDENTIAL

9.9.3.13 Extended Control Register (ecr) (Base 2+02h, Mode All)

This is an ECP function control register.

ecr(7)-ecr(5): These bits are used for READ/WRITE and mode selection.

Table 9-12. Mode and Description of Extended Control Register (ECR)

ECR	Mode and Description
000	**Standard Parallel Port Mode** The FIFO is reset and the direction bit dcr(5) is always 0 (forward direction) in this mode.
001	**PS/2 Parallel Port Mode** It is similar to the SPP mode, except that the dcr(5) is **read/write**. When dcr(5) is 1, the PD bus is tri-state. Reading the data port returns the value on the PD bus instead of the value of the data register.
010	**Parallel Port Data FIFO Mode** This mode is similar to the 000 mode, except that the host writes or DMA transfers the data bytes to FIFO. The FIFO data are then transmitted to the peripheral using the standard parallel port protocol automatically. This mode is only valid in the forward direction (dcr(5)=0).
011	**ECP Parallel Port Mode** In the forward direction, bytes in the ecpDFifo and ecpAFifo are placed in a single FIFO and automatically transmitted to the peripheral under the ECP protocol. In the reverse direction, bytes are transmitted to the ecpDFifo from the ECP port.
100, 101	**Reserved; undefined**
110	**Test Mode** In this mode, FIFO may be read from or written to, but it cannot be sent to the peripheral.
111	**Configuration Mode** In this mode, the cnfgA and cnfgB registers are accessible at 0x400 and 0x401.

ecr(4): nErrIntrEn, READ/WRITE, Valid in ECP(011) Mode
- 1: Disable the interrupt generated on the asserting edge of the nFault input.
- 0: Enable the interrupt pulse on the asserting edge of the nFault. An interrupt pulse will be generated if nFault is asserted or if this bit is written from 1 to 0 in the low-level nFault.

ecr(3): dmaEn, READ/WRITE
- 1: Enable DMA. DMA is started when serviceIntr (ecr(2)) is 0.
- 0: Disable DMA unconditionally.

ecr(2): ServiceIntr, READ/WRITE
- 1: Disable DMA and all service interrupts.
- 0: Enable the service interrupts. This bit will be set to “1” by hardware when one of the three service interrupts occurs.

Writing “1” to this bit will not generate an interrupt.

Case 1: dmaEn=1

During DMA, this bit will be set to 1 (a service interrupt generated) if the terminal count is reached.

Case 2: dmaEn=0, dcr(5)=0

This bit is set to 1 (a service interrupt generated) whenever there is writeIntrThreshold or more bytes space free in FIFO.

Case 3: dmaEn=0, dcr(5)=1

This bit is set to 1 (a service interrupt generated) whenever there is readIntrThreshold or more valid bytes to be read from FIFO.

ecr(1): full, **read only**
- 1: FIFO is full and cannot accept another byte.
- 0: FIFO has at least one free data byte space.

CONFIDENTIAL

ecr(0): empty, **read only**
1: FIFO is empty.
0: FIFO contains at least one data byte.

9.9.3.14 Mode Switching Operation

In programmed I/O control (mode 000 or 001), P1284 negotiation and all other tasks that happen before data transmission are software-controlled. Setting the mode to 011 or 010 will cause the hardware to perform an automatic control-line handshaking, transferring information between the FIFO and the ECP port.

For mode 000 and 001, they may be immediately switched. To change the direction, the mode must be set to 001 first.

In the extended forward mode, FIFO must be cleared and all the signals must be de-asserted before returning to mode 000 or 001. In the ECP reverse mode, all data must be read from FIFO before returning to mode 000 or 001. Usually, unneeded data are accumulated during ECP reverse handshaking when the mode is changed during a data transfer. In such a condition, nAutoFd will be de-asserted regardless of the transfer state. To avoid bugs during handshaking signals, these guidelines must be followed.

9.9.3.15 Software Operation (ECP)

Before the ECP operation can be started, it is necessary for the host to switch the mode to 000 first in order to negotiate with the parallel port. During this process, the host determines whether the peripheral supports the ECP protocol.

After this negotiation is completed, the mode is set to 011 (ECP). To enable the drivers, the direction must be set to 0. Both strobe and autoFd are set to 0, causing nStrobe and nAutoFd signals to be de-asserted.

All FIFO data transfer is PWord-wide and PWord aligned. Permitted only in the forward direction, Address/RLE transfers are byte-wide. The ECP Address/RLE bytes may be automatically sent by writing to the ecpAFifo. Similarly, data PWords may be automatically sent via the ecpDFifo.

To change the direction, the host has to switch the mode to 001. It then negotiates either the forward or reverse channel, sets the direction to 1 or 0, and finally switches the mode to 001. If the direction is set to 1, the hardware performs the handshaking for each ECP data byte read, and then tries to fill FIFO. At this time, PWords may be read from the ecpDFifo while retaining data. It is also possible to perform the ECP transfer by handshaking with individual bytes under programmed control in mode 001 or 000 even though this is a comparatively time-consuming approach.

9.9.3.16 Hardware Operation (DMA)

The Standard PC DMA protocol (through LDRQ#) is followed. As in the programmed I/O case, software sets the direction and state. Next, the desired count and memory addresses are programmed into DMA controller. The dmaEn is set to 1, and the serviceIntr is set to 0. To complete the process, the DMA channel with the DMA controller is unmasked. The contents of FIFO are emptied or filled by DMA using the right mode and direction.

DMA is always transferred to or from FIFO located at 0 x 400. By generating an interrupt and asserting a serviceIntr, DMA is disabled when the DMA controller reaches the terminal count. By not asserting LDRQ# for more than 32 consecutive DMA cycles, blocking of refresh requests is eliminated.

When it is necessary to disable a DMA while performing transfer, the host DMA controller is disabled, serviceIntr is then set to 1, and dmaEn is next set to 0. If the contents in FIFO are empty or full, DMA will start again. This is first done by enabling the host DMA controller, and then setting dmaEn to 1. Finally, serviceIntr is set to 0. Upon completion of a DMA transfer in the forward direction, the software program must wait until the contents in FIFO are empty and the busy line is low, ensuring that all data successfully reach the peripheral device.

CONFIDENTIAL

9.9.3.17 Interrupt

It is necessary to generate an interrupt when any of the following states is reached.

5. serviceIntr = 0, dmaEn = 0, direction = 0, and the number of PWords in the FIFO is greater than or equal to writeIntrThreshold.
6. serviceIntr = 0, dmaEn = 0, direction = 1, and the number of PWords in the FIFO is greater than or equal to readIntrThreshold.
7. serviceIntr = 0, dmaEn = 1, and DMA reaches the terminal count.
8. nErrIntrEn = 0 and nFault goes from high to low or when nErrIntrEn is set from 1 to 0 and nFault is asserted.
9. ackIntEn = 1. In current implementation of using existing parallel ports, the generated interrupt may be either edge or level trigger type.

9.9.3.18 Interrupt-driven Programmed I/O

It is also possible to use an interrupt-driven programmed I/O to execute either ECP or parallel port FIFOs. An interrupt will occur in the forward direction when serviceIntr is 0 and the number of free PWords in the FIFO is equal to or greater than writeIntrThreshold. If either of these conditions is not met, it may be filled with writeIntrThreshold PWords. An interrupt will occur in the reverse direction when serviceIntr is 0 and the number of available PWords in the FIFO is equal to readIntrThreshold. If it is full, the FIFO can be completely emptied in a single burst. If it is not full, only a number of PWords equal to readIntrThreshold may be read from the FIFO in a single burst. In the Test mode, software can determine the values of writeIntrThreshold, readIntrThreshold, and FIFO depth while accessing the FIFO.

For any PC LPC bus implementation adjusted to expedite DMA or I/O transfer, it is necessary to ensure that the bandwidth on ISA is maintained on the interface. Although the LPC (even PCI) bus of PC cannot be directly controlled, the interface bandwidth of ECP port can be constrained to perform at the optimum speed.

9.9.3.19 Standard Parallel Port

In the forward direction with DMA, the standard parallel port is run at or close to the permitted peak bandwidth of 500 KB/sec. The state machine does not examine nAck, but just begins the next DMA based on the Busy signal.

CONFIDENTIAL

9.10 Keyboard Controller (KBC)

The keyboard controller is implemented using an 8-bit microcontroller that is capable of executing the 8042 instruction set. For general information, please refer to the description of the 8042 in the 8-bit controller handbook. In addition, the microcontroller can enter the power-down mode by executing two types of power-down instructions.

Figure 9-13. Keyboard and Mouse Interface

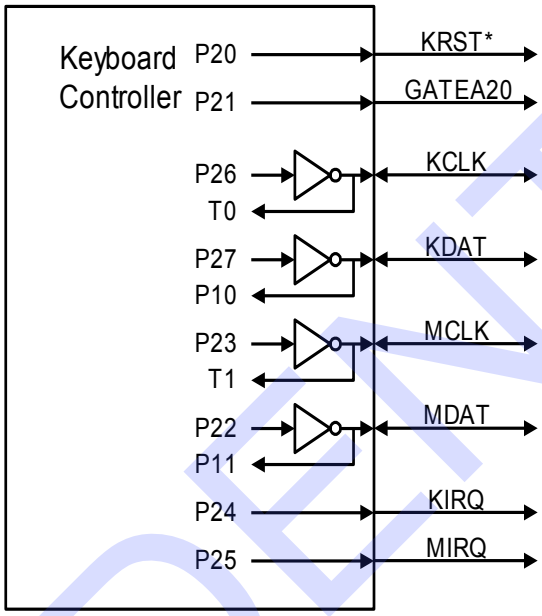

9.10.1 Host Interface

The keyboard controller interfaces with the system through the 8042 style host interface. The following table shows how the interface decodes the control signals.

Table 9-13. Data Register READ/WRITE Controls

Host Address [Note]	R/W*	Function
60h	R	READ DATA
60h	W	WRITE DATA, (Clear F1)
64h	R	READ Status
64h	W	WRITE Command, (Set F1)

Note: These are the default values of LDN5, 60h and 61h (DATA); LDN5, 62h and 63h (Command). All these registers are programmable.

READ DATA: This is an 8-bit **read only** register. When read, the KIRQ output is cleared and OBF flag in the status register is cleared.
WRITE DATA: This is an 8-bit **write only** register. When written, the F1 flag of the Status register is cleared and the IBF bit is set.
READ Status: This is an 8-bit **read only** register. Refer to the description of the Status register for more information.

WRITE Command: This is an 8-bit **write only** register. When written, both F1 and IBF flags of the Status register are set.

CONFIDENTIAL

9.10.2 Data Registers and Status Register

The keyboard controller provides two data registers, one is DBIN for data input, and the other is DBOUT for data output. Both are 8-bit wide. A write (microcontroller) to the DBOUT will load Keyboard Data Read Buffer, set OBF flag and set the KIRQ output. A read (microcontroller) of DBIN will read the data from the Keyboard Data or Command Write Buffer and clear the IBF flag.

The status register holds information concerning the status of the data registers, the internal flags, and some user-defined status bits. Please refer to Table 9-14. Status Register below. The bit 0 OBF is set to "1" when the microcontroller writes data into DBOUT, and is cleared when the system initiates DATA READ operation. The bit 1 IBF is set to "1" when the system initiates WRITE operation, and is cleared when the microcontroller executes an "IN A, DBB" instruction. The F0 and F1 flags can be set or reset when the microcontroller executes clear and complement flag instructions. F1 also holds the system WRITE information when the system performs WRITE operation.

Table 9-14. Status Register

7	6	5	4	3	2	1	0
ST7	ST6	ST5	ST4	F1	F0	IBF	OBF

9.10.3 Keyboard and Mouse Interface

KCLK is a keyboard clock pin. Its output is the inversion of pin P26 of the microcontroller, and the input of KCLK is connected to the T0 pin of the microcontroller. KDAT is the keyboard data pin; its output is the inversion of pin P27 of the microcontroller, and the input of KDAT is connected to the P10 of the microcontroller. MCLK is the mouse clock pin. Its output is the inversion of pin P23 of the microcontroller, and the input of MCLK is connected to the T1 pin of the microcontroller. MDAT is the Mouse data pin. Its output is the inversion of pin P22 of the microcontroller, and the input of MDAT is connected to the P11 of the microcontroller. KRST# is pin P20 of the microcontroller. GATEA20 is the pin P21 of the microcontroller. These two pins are used as software-controlled or user defined outputs. External pull-ups may be required for these pins.

9.10.4 KIRQ and MIRQ

KIRQ is the interrupt request for the keyboard (Default IRQ1), and MIRQ is the interrupt request for the mouse (Default IRQ12). KIRQ is internally connected to P24 pin of the microcontroller, and MIRQ is internally connected to pin P25 of the microcontroller.

CONFIDENTIAL

9.11 Consumer Remote Control (TV Remote) IR (CIR)

9.11.1 Overview

CIR is used in the consumer remote control equipment, and is a programmable amplitude shift keyed (ASK) serial communication protocol. By adjusting frequencies, baud rate divisors and sensitivity ranges, the CIR registers are able to support the popular protocols such as RC-5, NEC, and RECS-80. Software driver programming can support new protocols.

9.11.2 Features

- Supports 30 kHz - 57 kHz (low frequency) or 400 kHz - 500 kHz (high frequency) carrier transmission
- Baud rate up to 115200 BPS (high frequency)
- Demodulation optional
- Supports transmission run-length encoding and deferral function
- 32-byte FIFO for data transmission or data reception

9.11.3 Block Diagram

CIR consists of two parts, transmitter and receiver. Regarding the transmitter part, it is responsible for transmitting data to FIFO, processing FIFO data by serialization and modulation and sending out data through the LED device. As for the receiver part, it is responsible for receiving data, processing data by demodulation and deserialization and storing data in the Receiver FIFO.

Figure 9-14. CIR Block Diagram

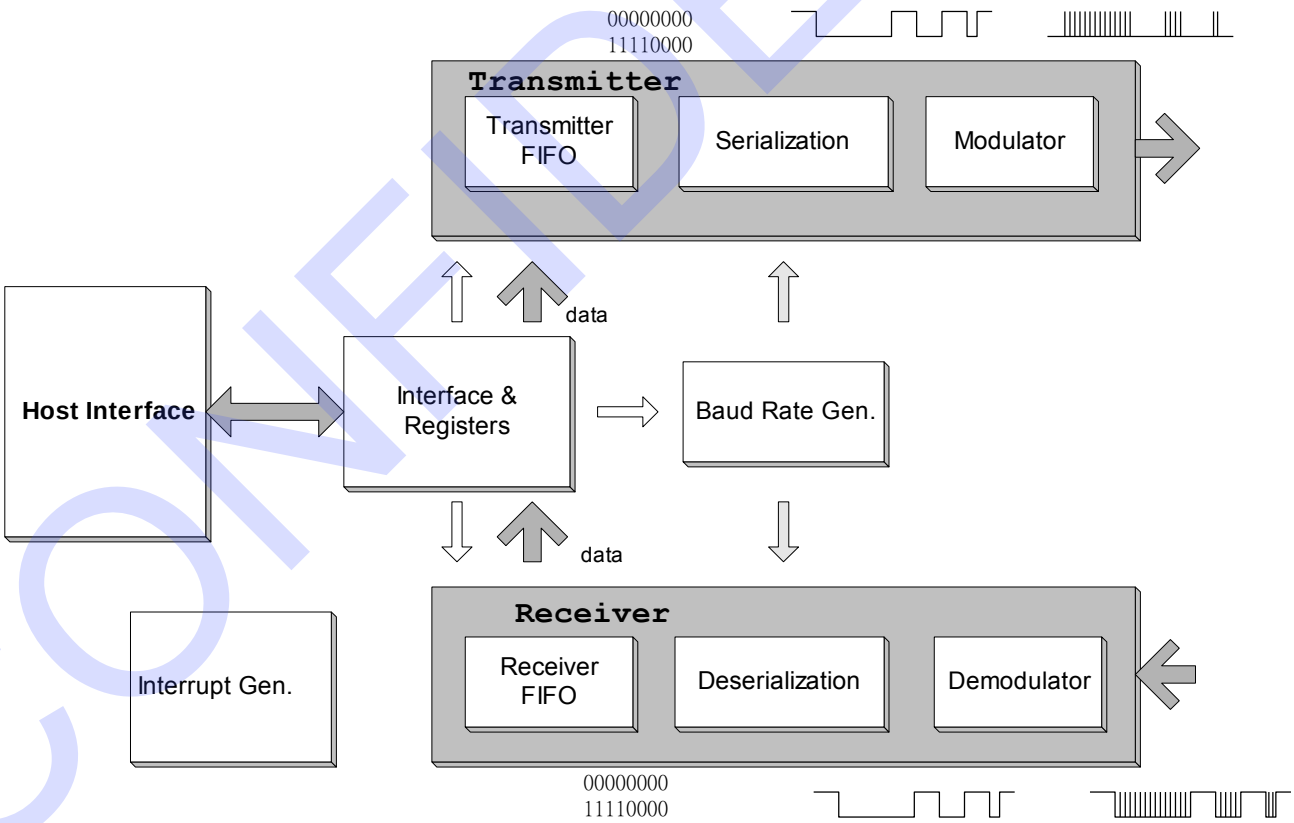

CONFIDENTIAL

9.11.4 Transmit Operation

The data written to the Transmitter FIFO will be exactly serialized from LSB to MSB, modulated with the carrier frequency and sent to the CIRTX output. The data are either in bit-string format or run-length decode.

Before the data transmission can be started, code byte write operation must be performed to the Transmitter FIFO DR. Bit TXRLE of TCR1 needs to be set to “1” before the data in run-length decode can be written into the Transmitter FIFO. Setting TXENDF of TCR1 will enable the data transmission deferral, and avoid the Transmitter FIFO underrun. The bit width of the serialized bit string is determined by the value programmed in the baud rate divisor registers, BDLR and BDHR. When the two bits, HCFS and CFQ[4:0], are set, either the high-speed or low-speed carrier range is selected, and the corresponding carrier frequency will also be determined. Bit TXMPM[1:0] and TXMPW[2:0] specify the pulse number in a bit width and the required duty cycles of the carrier pulse according to the communication protocol. Only a logic “0” can activate the Transmitter LED in the format of a series of modulating pulses.

9.11.5 Receive Operation

The Receiver function will be enabled if bit RXEN of RCR is set to “1”. Either demodulated or modulated RX# signal is loaded into Receiver FIFO, and bit RXEND of RCR determines whether the demodulation logic should be used or not. It determines the baud rate by programming the baud rate divisor registers BDLR and BDHR, and the carrier frequency by programming bit HCFS and CFQ[4:0]. Set RDWOS to “0” to synchronize. Bit RXACT of RCR is set to “1” when the serial data or the selected carrier is incoming, and the sampled data will then be kept in Receiver FIFO. Write “1” to bit RXACT to stop the Receiver operation whereas “0” to bit RXEN to disable it.

9.11.6 Register Description and Address

Table 9-15. CIR Register

Register Name	R/W	Address	Default
CIR Data Register (DR)	R/W	Base + 0h	FFh
CIR Interrupt Enable Register (IER)	R/W	Base + 1h	00h
CIR Receiver Control Register (RCR)	R/W	Base + 2h	01h
CIR Transmitter Control Register 1 (TCR1)	R/W	Base + 3h	00h
CIR Transmitter Control Register 2 (TCR2)	R/W	Base + 4h	5Ch
CIR Transmitter Status Register (TSR)	R	Base + 5h	00h
CIR Receiver Status Register (RSR)	R	Base + 6h	00h
CIR Baud Rate Divisor Low Byte Register (BDLR)	R/W	Base + 5h	00h
CIR Baud Rate Divisor High Byte Register (BDHR)	R/W	Base + 6h	00h
CIR Interrupt Identification Register (IIR)	R/W	Base + 7h	01h

CONFIDENTIAL

9.11.6.1 CIR Data Register (DR)

The DR, an 8-bit **read/write** register, is the data port for CIR. Data are transmitted and received through it.

Address: Base Address + 0h

Bit	R/W	Default	Description
7-0	R/W	FFh	**CIR Data Register (DR[7:0])** Writing data to this register causes data to be written to Transmitter FIFO. Reading data from this register causes data to be received from Receiver FIFO.

9.11.6.2 CIR Interrupt Enable Register (IER)

The IER, an 8-bit **read/write** register, is to enable the CIR interrupt request.

Address: Base Address + 1h

Bit	R/W	Default	Description
7	R/W	0b	**Transmitter Data Output Select (TX_sel)** This bit is to select transmitter data output. 0: DTR3# (Default) 1: CIRTX
6	R/W	0b	**Reserved**
5	R/W	0b	**Reset** The function of this bit is software reset. Writing “1” to this bit resets register DR, IER, TCR1, BDLR, BDHR and IIR and then it will be self-cleared to the initial value.
4	R/W	0b	**Baud Rate Register Enable (BR)** This bit is to control whether the baud rate register can enable read/write function or not. 1: Enable 0: Disable
3	R/W	0b	**Interrupt Enable Control (IEC)** This bit is to control whether the interrupt function can be enabled or not. 1: Enable 0: Disable
2	R/W	0b	**Receiver FIFO Overrun Interrupt Enable (RFOIE)** This bit is to control Receiver FIFO Overrun Interrupt request. 1: Enable 0: Disable
1	R/W	0b	**Receiver Data Available Interrupt Enable (RDAIE)** This bit is to enable Receiver Data Available Interrupt request. The Receiver will generate this interrupt when the data available in FIFO exceed the FIFO threshold level. 1: Enable 0: Disable
0	R/W	0b	**Transmitter Low Data Level Interrupt Enable (TLDLIE)** This bit is to enable Transmitter Low Data Level Interrupt request. The Transmitter will generate this interrupt when the data available in FIFO are less than the FIFO threshold Level. 1: Enable 0: Disable

CONFIDENTIAL

9.11.6.3 CIR Receiver Control Register (RCR)

The RCR, an 8-bit **read/write** register, is to control the CIR Receiver.

Address: Base Address + 2h

Bit	R/W	Default	Description
7	R/W	0b	**Receiver Data without Sync. (RDWOS)** This bit is to control the sync. logic for received data. Set this bit to "1" to obtain the received data without sync. logic. Set this bit to "0" to obtain the received data with sync. logic.
6	R/W	0b	**High-Speed Carrier Frequency Select (HCFS)** This bit is to select the carrier frequency between the high-speed and low-speed. 0: 30-58 kHz (Default) 1: 400-500 kHz
5	R/W	0b	**Receiver Enable (RXEN)** This bit is to enable the Receiver function. Receiver Enable and RXACT will be activated if the selected carrier frequency is received. 1: Enable 0: Disable
4	R/W	0b	**Receiver Demodulation Enable (RXEND)** This bit is to control the Receiver Demodulation logic. If the Receiver device can not demodulate the correct carrier, set this bit to "1" to enable it. 1: Enable 0: Disable
3	R/W	0b	**Receiver Active (RXACT)** This bit is to control the Receiver operation. This bit is set to "0" when the Receiver is inactive. This bit will be set to "1" when the Receiver detects a pulse (RXEND=0) or pulse-train (RXEND=1) with the correct carrier frequency. The Receiver then starts to sample the input data when Receiver Active is set. Write a "1" to this bit to clear the Receiver Active condition and make the Receiver enter the inactive mode.
2-0	R/W	001b	**Receiver Demodulation Carrier Range (RXDCR[2:0])** These three bits are to set the tolerance of the Receiver. For the detailed demodulation carrier frequency, please refer to Table 9-17. Receiver Demodulation Low Frequency (HCFS = 0) and Table 9-18. Receiver Demodulation High Frequency (HCFS = 1) on page 158 and 159.

CONFIDENTIAL

9.11.6.4 CIR Transmitter Control Register 1 (TCR1)

The TCR1, an 8-bit **read/write** register, is used to control the Transmitter.

Address: Base Address + 3h

Bit	R/W	Default	Description
7	R/W	0b	**FIFO Clear (FIFOCLR)** Writing a "1" to this bit clears FIFO. This bit is then self-cleared to "0".
6	R/W	0b	**Internal Loopback Enable (ILE)** This bit is to execute internal loopback for test and must be "0" in normal operation. 1: Enable 0: Disable
5-4	R/W	0b	**FIFO Threshold Level (FIFOTL)** These two bits are used to set the FIFO threshold level. The FIFO length is 32 bytes for TX or RX function (ILE = 0) in normal operation and 16 bytes for both TX and RX in the internal loopback mode (ILE = 1). **16-Byte Mode** **32-Byte Mode** 00 1 1 (Default) 01 3 7 10 7 17 11 13 25
3	R/W	0b	**Transmitter Run Length Enable (TXRLE)** This bit controls the Transmitter Run Length encoding/decoding mode, which condenses a series of "1" or "0" into one byte with the bit value stored in bit 7 and number of bits minus 1 in bit 6-0. 1: Enable 0: Disable
2	R/W	0b	**Transmitter Deferral (TXENDF)** This bit is to avoid Transmitter underrun condition. When this bit is set to "1", the Transmitter FIFO data will be kept until the transmitter time-out condition occurs, or FIFO reaches full.
1-0	R/W	0b	**Transmitter Modulation Pulse Mode (TXMPM[1:0])** These two bits are to define the Transmitter modulation pulse mode. **TXMPM[1:0]** **Modulation Pulse Mode** C_pls mode (Default): Pulses are generated continuously for the entire logic 0 bit period. 8_pls mode: 8 pulses are generated for each logic 0 bit. 6_pls mode: 6 pulses are generated for each logic 0 bit. 11: Reserved.

CONFIDENTIAL

9.11.6.5 CIR Transmitter Control Register (TCR2)

The TCR2, an 8-bit **read/write** register, is to determine the carrier frequency.

Address: Base Address + 4h

Bit	R/W	Default	Description
7-3	R/W	01011b	**Carrier Frequency (CFQ[4:0])** These five bits are to determine the modulation carrier frequency. Please refer to the following table.
2-0	R/W	100b	**Transmitter Modulation Pulse Width (TXMPW[2:0])** These three bits are to set the Transmitter Modulation pulse width. The duty cycle of the carrier will be determined according to the setting of the carrier frequency and the selection of Transmitter Modulation pulse width. **TXMPW[2:0]** — **HCFS = 0** — **HCFS = 1** 000 — Reserved — Reserved 001 — Reserved — Reserved 010 — 6 μs — 0.7 μs 011 — 7 μs — 0.8 μs **100** — **8.7 μs** — **0.9 μs (Default)** 101 — 10.6 μs — 1.0 μs 110 — 13.3 μs — 1.16 μs 111 — Reserved — Reserved

CONFIDENTIAL

Table 9-16. Modulation Carrier Frequency

CFQ	Low Frequency (HCFS =0)	High Frequency (HCFS = 1)
00000	27 kHz	-
00010	29 kHz	-
00011	30 kHz	400 kHz
00100	31 kHz	-
00101	32 kHz	-
00110	33 kHz	-
00111	34 kHz	-
01000	35 kHz	450 kHz
01001	36 kHz	-
01010	37 kHz	-
01011	**38 kHz (default)**	**480 kHz (default)**
01100	39 kHz	-
01101	40 kHz	500 kHz
01110	41 kHz	-
01111	42 kHz	-
10000	43 kHz	-
10001	44 kHz	-
10010	45 kHz	-
10011	46 kHz	-
10100	47 kHz	-
10101	48 kHz	-
10110	49 kHz	-
10111	50 kHz	-
11000	51 kHz	-
11001	52 kHz	-
11010	53 kHz	-
11011	54 kHz	-
11100	55 kHz	-
11101	56 kHz	-
11110	57 kHz	-
11111	58 kHz	-

CONFIDENTIAL

Table 9-17. Receiver Demodulation Low Frequency (HCFS = 0)

RXDCR	001		010		011		100		101		110		
CFQ	Min.	Max.	Min.	Max.	Min.	Max.	Min.	Max.	Min.	Max.	Min.	Max.	(Hz)
00001	26.25	29.75	24.5	31.5	22.75	33.25	21	35	19.25	36.75	17.5	38.5	28k
00010	27.19	30.81	25.38	32.63	23.56	34.44	21.75	36.25	19.94	38.06	18.13	39.88	29k
00011	28.13	31.88	26.25	33.75	24.38	35.63	22.5	37.5	20.63	39.38	18.75	41.25	30k
00100	29.06	32.94	27.13	34.88	25.19	36.81	23.25	38.75	21.31	40.69	19.38	42.63	31k
00101	30	34	28	36	26	38	24	40	22	42	20	44	32k
00110	30.94	35.06	28.88	37.13	26.81	39.19	24.75	41.25	22.69	43.31	20.63	45.38	33k
00111	31.88	36.13	29.75	38.25	27.63	40.38	25.5	42.5	23.38	44.63	21.25	46.75	34k
01000	32.81	37.19	30.63	39.38	28.44	41.56	26.25	43.75	24.06	45.94	21.88	48.13	35k
01001	33.75	38.25	31.5	40.5	29.25	42.75	27	45	24.75	47.25	22.5	49.5	36k
01010	34.69	39.31	32.38	41.63	30.06	43.94	27.75	46.25	25.44	48.56	23.13	50.88	37k
01011	**35.63**	**40.38**	**33.25**	**42.75**	**30.88**	**45.13**	**28.5**	**47.5**	**26.13**	**49.88**	**23.75**	**52.25**	**38k**
01100	36.56	41.44	34.13	43.88	31.69	46.31	29.25	48.75	26.81	51.19	24.38	53.63	39k
01101	37.5	42.5	35	45	32.5	47.5	30	50	27.5	52.5	25	55	40k
01110	38.44	43.56	35.88	46.13	33.31	48.69	30.75	51.25	28.19	53.81	25.63	56.38	41k
01111	39.38	44.63	36.75	47.25	34.13	49.88	31.5	52.5	28.88	55.13	26.25	57.75	42k
10000	40.31	45.69	37.63	48.38	34.94	51.06	32.25	53.75	29.56	56.44	26.88	59.13	43k
10001	41.25	46.75	38.5	49.5	35.75	52.25	33	55	30.2.15	57.75	27.5	60.5	44k
10010	42.19	47.81	39.38	50.63	36.56	53.44	33.75	56.25	30.94	59.06	28.13	61.88	45k
10011	43.13	48.88	40.2.15	51.75	37.38	54.63	34.5	57.5	31.63	60.38	28.75	63.25	46k
10100	44.06	49.94	41.13	52.88	38.19	55.81	35.25	58.75	32.31	61.69	29.38	64.63	47k
10101	45	51	42	54	39	57	36	60	33	63	30	66	48k
10110	45.94	52.06	42.88	55.13	39.81	58.19	36.75	61.25	33.69	64.31	30.63	67.38	49k
10111	46.88	53.13	43.75	56.25	40.63	59.38	37.5	62.5	34.38	65.63	31.25	68.75	50k
11000	47.81	54.19	44.63	57.38	41.44	60.56	38.25	63.75	35.06	66.94	31.88	70.13	51k
11001	49.18	54.55	46.88	57.69	44.78	61.22	42.86	65.22	41.1	69.77	39.47	75	52k
11010	49.69	56.31	46.38	59.63	43.06	62.94	39.75	66.25	36.44	69.56	33.13	72.88	53k
11011	50.63	57.38	47.25	60.75	43.88	64.13	40.5	67.5	37.13	70.88	33.75	74.25	54k
11100	51.56	58.44	48.13	61.88	44.69	65.31	41.25	68.75	37.81	72.19	34.38	75.63	55k
11101	52.5	59.5	49	63	45.5	66.5	42	70	38.5	73.5	35	77	56k
11110	53.44	60.56	49.88	64.13	46.31	67.69	42.75	71.25	39.19	74.81	35.63	78.38	57k

CONFIDENTIAL

Table 9-18. Receiver Demodulation High Frequency (HCFS = 1)

RXDCR	001		010		011		100		101		110		
CFQ	Min.	Max.	Min.	Max.	Min.	Max.	Min.	Max.	Min.	Max.	Min.	Max.	(Hz)
00011	375	425	350	450	325	475	300	500	275	525	250	550	400k
01000	421.9	478.1	393.8	506.3	365.6	534.4	337.5	562.5	309.4	590.6	281.3	618.8	450k
01011	450	510	420	540	390	570	360	600	330	630	300	660	**480k**
01011	468.8	531.3	437.5	562.5	406.3	593.8	375	625	343.8	656.3	312.5	687.5	500k

9.11.6.6 CIR Transmitter Status Register (TSR)

The TSR, an 8-bit **read only** register, provides the Transmitter FIFO status.

Address: Base Address + 5h

Bit	R/W	Default	Description
7-6	R	-	**Reserved**
5-0	R	000000b	**Transmitter FIFO Byte Count (TXFBC[5:0])** Return the number of bytes left in the Transmitter FIFO.

9.11.6.7 CIR Receiver FIFO Status Register (RSR)

The RSR, an 8-bit **read only** register, provides the Receiver FIFO status.

Address: Base Address + 6h

Bit	R/W	Default	Description
7	R	0b	**Receiver FIFO Time-out (RXFTO)** This bit will be set to "1" when a Receiver FIFO time-out condition occurs. Followings are the conditions required for the occurrence of Receiver FIFO time-out: 1. At least one byte of data are queued in the Receiver FIFO for more than 64 ms. 2. The Receiver has been inactive (RXACT=0) for more than 64 ms.
6	-	-	**Reserved**
5-0	R	000000b	**Receiver FIFO Byte Count (RXFBC)** Return the number of bytes left in Receiver FIFO.

9.11.6.8 CIR Baud Rate Divisor Low Byte Register (BDLR)

The BDLR, an 8-bit **read/write** register, is to program the CIR Baud Rate clock.

Address: Base Address + 5h (when BR = 1)

Bit	R/W	Default	Description
7-0	R/W	00h	**Baud Rate Divisor Low Byte (BDLR[7:0])** These bits, for dividing the Baud Rate clock, are the low byte of the register.

CONFIDENTIAL

9.11.6.9 CIR Baud Rate Divisor High Byte Register (BDHR)

The BDHR, an 8-bit **read/write** register, is used to program the CIR Baud Rate clock.

Address: Base Address + 6h (when BR = 1)

Bit	R/W	Default	Description
7-0	R/W	00h	**Baud Rate Divisor High Byte (BDHR[7:0])** These bits, for dividing the Baud Rate clock, are the high byte of the register.

Baud rate divisor = 115200 / baud rate
Ex1: 2400 bps → 115200 /2400 = 48 → 48(d) = 0030(h) → BDHR = 00h, BDLR = 30h
Ex2: bit width = 0.565 ms (1770 bps (115200 / 1770 = 65(d) = 0041(h) (BDHR = 00(h), BDLR = 41(h)

9.11.6.10 CIR Interrupt Identification Register (IIR)

The IIR, an 8-bit register, is to identify the pending interrupt.

Address: Base address + 7h

Bit	R/W	Default	Description
7-3	-	-	**Reserved**
2-1	R	00b	**Interrupt Identification** These two bits are to identify the source of the pending interrupt. **IIR[1:0] Interrupt Source** 00 No interrupt 01 Transmitter Low Data Level Interrupt 10 Receiver Data Stored Interrupt 11 Receiver FIFO Overrun Interrupt
0	R	1b	**Interrupt Pending** This bit will be set to “1” while an interrupt is pending.

CONFIDENTIAL

10. DC Electrical Characteristics

Operating Condition

3VSB/SYS_3VSB/AVCC3 .....3.3V ± 5%
VCCBT..... 1.8V / 3.3V± 5%
VBAT..... 2.3V to 3.6V
Operation Temperature (Topt).....-40°C to +85°C

Absolute Maximum Ratings*

Applied Voltage..... -0.3V to 3.6V
Input Voltage (Vi) ..... -0.3V to VCC3 + 0.3V
Output Voltage (Vo) ..... -0.3V to VCC3 + 0.3V
Storage Temperature..... -55°C to +125°C
Power Dissipation ……300mW

***Comments**

Stresses above those listed under "Absolute Maximum Ratings" may cause permanent damage to this device. These are stress ratings only. Functional operation of this device at these or any other conditions above those indicated in the operational sections of this specification is not implied or intended. Exposure to the absolute maximum rating conditions for extended periods may affect device reliability.

3.3V DC Electrical Characteristics (VCC3=3.3V±5%)

Symbol	Parameter	Conditions	Min.	Typ.	Max.	Unit
DO8 Buffer						
V_{OL}	Low Output Voltage	I_{OL} = 8 mA			0.4	V
V_{OH}	High Output Voltage	I_{OH} = -8 mA	2.4			V
DOD8 Buffer						
V_{OL}	Low Output Voltage	I_{OL} = 8 mA			0.4	V
DIO8 Type Buffer						
V_{OL}	Low Output Voltage	I_{OL} = 8 mA			0.4	V
V_{OH}	High Output Voltage	I_{OH} = -8 mA	2.4			V
V_{IL}	Low Input Voltage				0.8	V
V_{IH}	High Input Voltage		2.2			V
I_{IL}	Low Input Leakage	V_{IN} = 0			10	μA
I_{IH}	High Input Leakage	V_{IN} = VCC3			-10	μA
I_{OZ}	3-state Leakage				20	μA
DIOD8 Type Buffer						
V_{OL}	Low Output Voltage	I_{OL} = 8 mA			0.4	V
V_{IL}	Low Input Voltage				0.8	V
V_{IH}	High Input Voltage		2.2			V
I_{IL}	Low Input Leakage	V_{IN} = 0			10	μA
I_{IH}	High Input Leakage	V_{IN} = VCC3			-10	μA
I_{OZ}	3-state Leakage				20	μA
DIO16 Type Buffer						
V_{OL}	Low Output Voltage	I_{OL} = 16 mA			0.4	V
V_{OH}	High Output Voltage	I_{OH} = -16 mA	2.4			V
V_{IL}	Low Input Voltage				0.8	V

CONFIDENTIAL

V_{IH}	High Input Voltage		2.2			V
I_{IL}	Low Input Leakage	V_{IN} = 0			10	μA
I_{IH}	High Input Leakage	V_{IN} = VCC3			-10	μA
I_{OZ}	3-state Leakage				20	μA
DIOD16 Type Buffer						
V_{OL}	Low Output Voltage	I_{OL} = 16 mA			0.4	V
V_{IL}	Low Input Voltage				0.8	V
V_{IH}	High Input Voltage		2.2			V
I_{IL}	Low Input Leakage	V_{IN} = 0			10	μA
I_{IH}	High Input Leakage	V_{IN} = VCC3			-10	μA
I_{OZ}	3-state Leakage				20	μA
DO24L Buffer						
V_{OL}	Low Output Voltage	I_{OL} = 24 mA			0.4	V
V_{OH}	High Output Voltage	I_{OH} = -8 mA	2.4			V
DIO24 Type Buffer						
V_{OL}	Low Output Voltage	I_{OL} = 24 mA			0.4	V
V_{OH}	High Output Voltage	I_{OH} = -16 mA	2.4			V
V_{IL}	Low Input Voltage				0.8	V
V_{IH}	High Input Voltage		2.2			V
I_{IL}	Low Input Leakage	V_{IN} = 0			10	μA
I_{IH}	High Input Leakage	V_{IN} = VCC3			-10	μA
I_{OZ}	3-state Leakage				20	μA
DI Type Buffer						
V_{IL}	Low Input Voltage				0.8	V
V_{IH}	High Input Voltage		2.2			V
V_{IH}	High Input Voltage(clock)		2.2			V
I_{IL}	Low Input Leakage	V_{IN} = 0				μA
I_{IH}	High Input Leakage	V_{IN} = VCC3				μA

CONFIDENTIAL

1.8V DC Electrical Characteristics (VCCBT=1.8V±5%)

Symbol	Parameter	Conditions	Min.	Typ.	Max.	Unit
DIO-L Type Buffer (1.8V)						
V_{OL}	Low Output Voltage	I_{OL} = -3mA			0.45	V
V_{OH}	High Output Voltage	I_{OH} = 3mA	1.35			V
V_{IL}	Low Input Voltage				0.45	V
V_{IH}	High Input Voltage		1.35		VCCBT+0.4	V
I_{IL}	Low Input Leakage	V_{IN} = 0			10	μA
I_{IH}	High Input Leakage	V_{IN} = 1.8V			-10	μA
I_{OZ}	3-state Leakage				20	μA
DI-LType Buffer (1.8V)						
V_{IL}	Low Input Voltage				0.45	V
V_{IH}	High Input Voltage		1.35		VCCBT+0.4	V
I_{IL}	Low Input Leakage	V_{IN} = 0				μA
I_{IH}	High Input Leakage	V_{IN} = 1.8V				μA

CONFIDENTIAL

This page is intentionally left blank.

CONFIDENTIAL

11. AC Characteristics

11.1 CLK (PCICLK) and LRESET Timings

Symbol	Parameter	Min.	Typ.	Max.	Unit
t_1	LCLK Cycle Time	28			nsec
t_2	LCLK High Time	11			nsec
t_3	LCLK Low Time	11			nsec
t_4	LRESET# Low Pulse Width	1.5			μsec

Figure 11-1. LCLK (PCICLK) and LRESET Timings

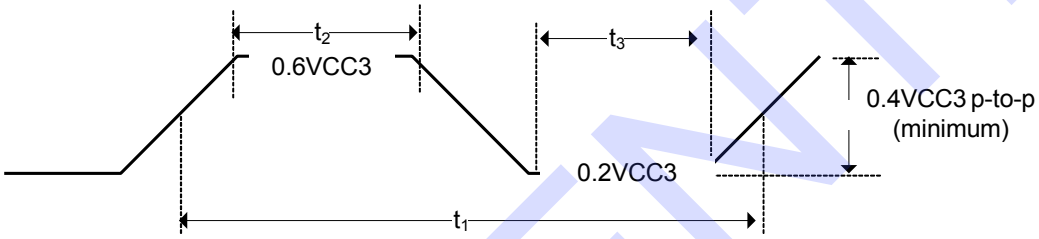

CONFIDENTIAL

11.2 LPC and SERIRQ Timings

Symbol	Parameter	Min.	Typ.	Max.	Unit
t_1	Float to Active Delay	3			nsec
t_2	Output Valid Delay			13	nsec
t_3	Active to Float Delay			20	nsec
t_4	Input Setup Time	9			nsec
t_5	Input Hold Time	3			nsec

Figure 11-2. LPC and SERIRQ Timings

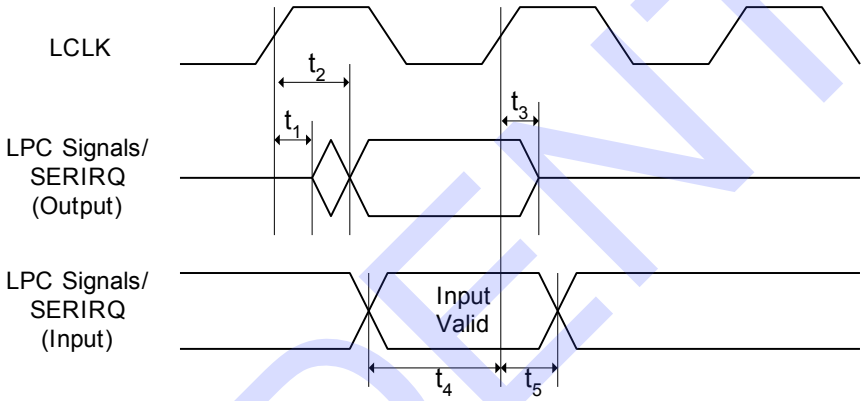

CONFIDENTIAL

11.3 Modem Control Timings

Symbol	Parameter	Min.	Typ.	Max.	Unit
t_1	Float to Active Delay			40	nsec

Figure 11-3. Modem Control Timings

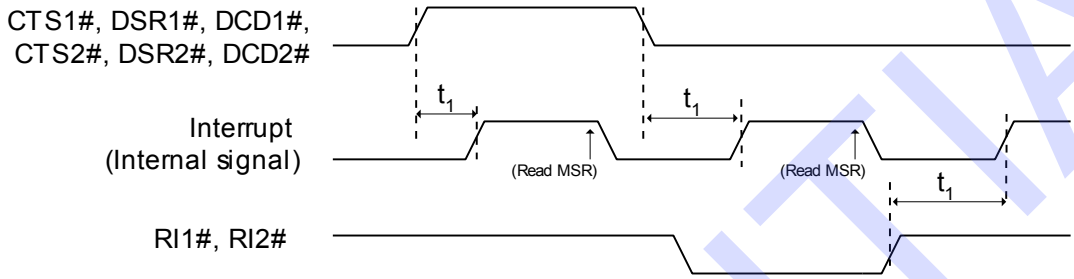

CONFIDENTIAL

11.4 EPP Address or Data Write Cycle Timings

Symbol	Parameter	Min.	Typ.	Max.	Unit
t_1	WRITE# asserted to PD[7:0] valid			50	nsec
t_2	ASTB# or DSTB# asserted to WAIT# de-asserted	0		10	nsec
t_3	WAIT# de-asserted to ASTB# or DSTB# de-asserted	65		135	nsec
t_4	ASTB# or DSTB# de-asserted to WAIT# asserted	0			nsec
t_5	WAIT# asserted to WRITE# de-asserted	65			nsec
t_6	PD[7:0] invalid after WRITE# de-asserted	0			nsec

Figure 11-4. EPP Address or Data Write Cycle Timings

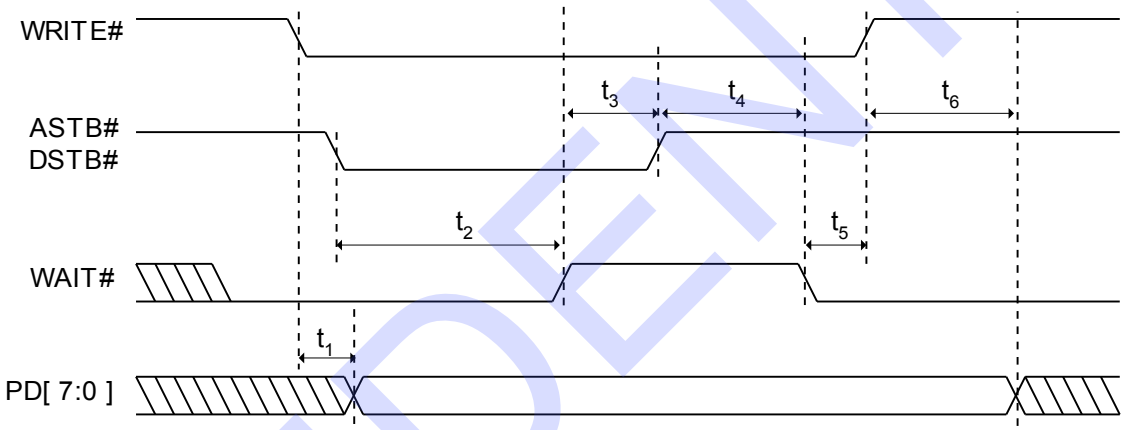

CONFIDENTIAL

11.5 Keyboard/Mouse Receive/Send Data Timings

Symbol	Parameter	Min.	Typ.	Max.	Unit
t_1	Time form DATA transition to falling edge of CLK (Receive)	5		25	μsec
t_2	Time form rising edge of CLK to DATA transition (Receive)	5		T4-5	μsec
t_3	Duration of CLK inactive (Receive/Send)	30		50	μsec
t_4	Duration of CLK active (Receive/Send)	30		50	μsec
t_5	Time to keyboard inhibit after clock 11 to ensure the keyboard device does not start another transmission (Receive)	>0	50		μsec
t_6	Time from inactive to active CLOCK transition, used to time when the auxiliary device samples DATA (Send)	5		25	μsec

Note: (1) The system can hold the 'clock' signal inactive to inhibit the next transmission.
(2) The system raises the 'clock' line to allow the next transmission.

Figure 11-5. Keyboard/Mouse Receive/Send Data Timings

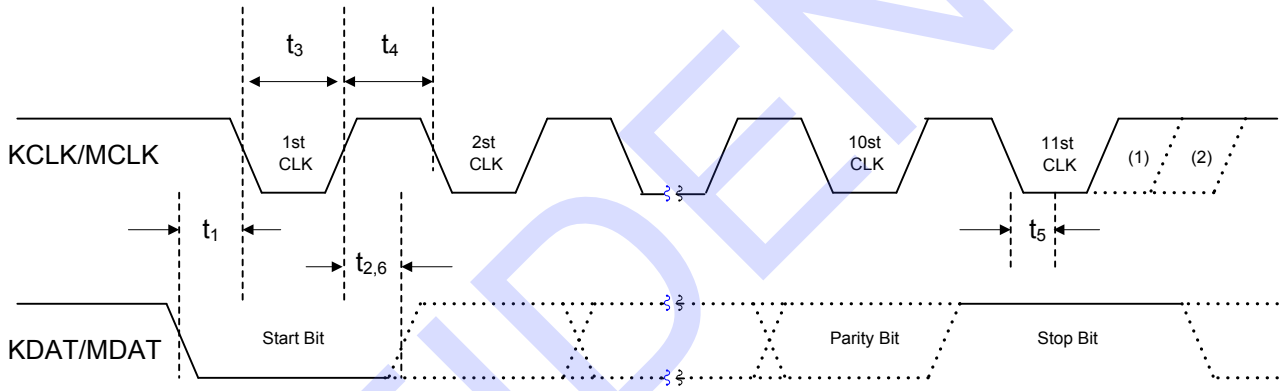

CONFIDENTIAL

11.6 EPP Address or Data Read Cycle Timings

Symbol	Parameter	Min.	Typ.	Max.	Unit
t_1	ASTB# or DSTB# asserted to WAIT# de-asserted			10	nsec
t_2	ASTB# or DSTB# asserted to PD[7:0] Hi-Z	0			nsec
t_3	PD[7:0] valid to WAIT# de-asserted	0			nsec
t_4	WAIT# de-asserted to ASTB# or DSTB# de-asserted	65		135	nsec
t_5	ASTB# or DSTB# de-asserted to WAIT# asserted	0			nsec
t_6	PD[7:0] invalid after ASTB# or DSTB# de-asserted	20			nsec

Figure 11-6. EPP Address or Data Read Cycle Timings

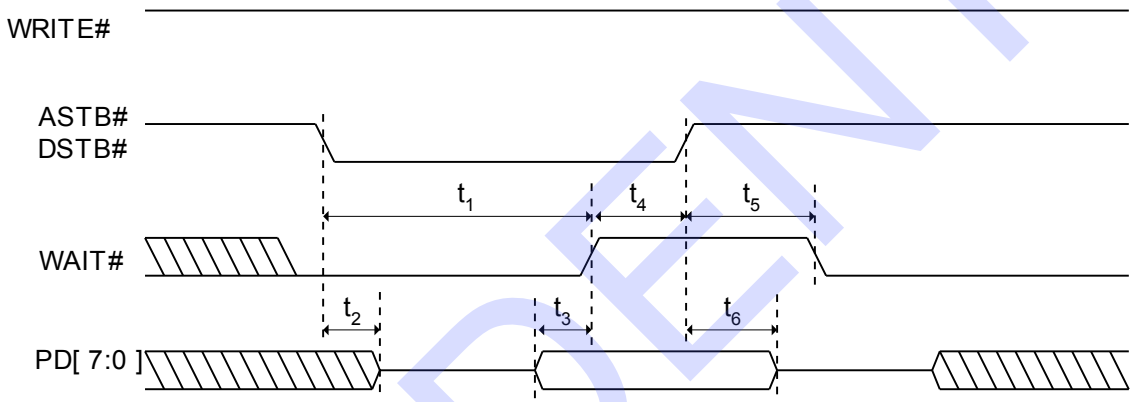

CONFIDENTIAL

11.7 ECP Parallel Port Forward Timings

Symbol	Parameter	Min.	Typ.	Max.	Unit
t_1	PD[7:0] and nAutoFd valid to nStrobe asserted			50	nsec
t_2	nStrobe asserted to Busy asserted	0			nsec
t_3	Busy asserted to nStrobe de-asserted	70		170	nsec
t_4	nStrobe de-asserted to Busy de-asserted	0			nsec
t_5	Busy de-asserted to PD[7:0] and nAutoFd changed	80		180	nsec
t_6	Busy de-asserted to nStrobe asserted	70		170	nsec

Figure 11-7. ECP Parallel Port Forward Timings

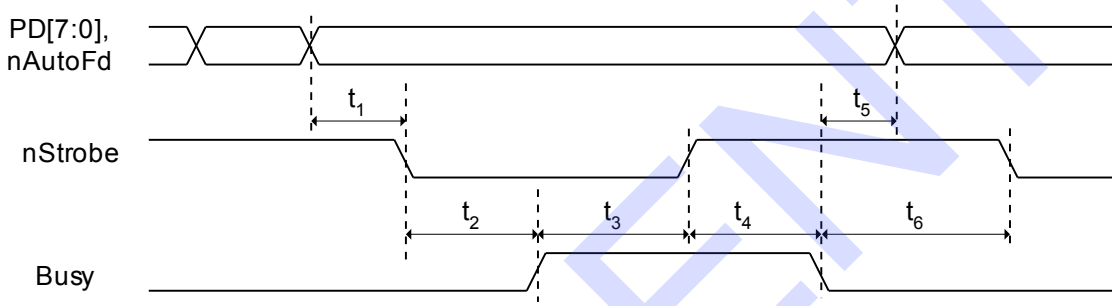

CONFIDENTIAL

11.8 ECP Parallel Port Backward Timings

Symbol	Parameter	Min.	Typ.	Max.	Unit
t_1	PD[7:0] valid to nAck asserted	0			nsec
t_2	nAck asserted to nAutoFd asserted	70		170	nsec
t_3	nAutoFd asserted to nAck de-asserted	0			nsec
t_4	nAck de-asserted to nAutoFd de-asserted	70		170	nsec
t_5	nAutoFd de-asserted to PD[7:0] changed	0			nsec
t_6	nAutoFd de-asserted to nAck asserted	0			nsec

Figure 11-8. ECP Parallel Port Backward Timings

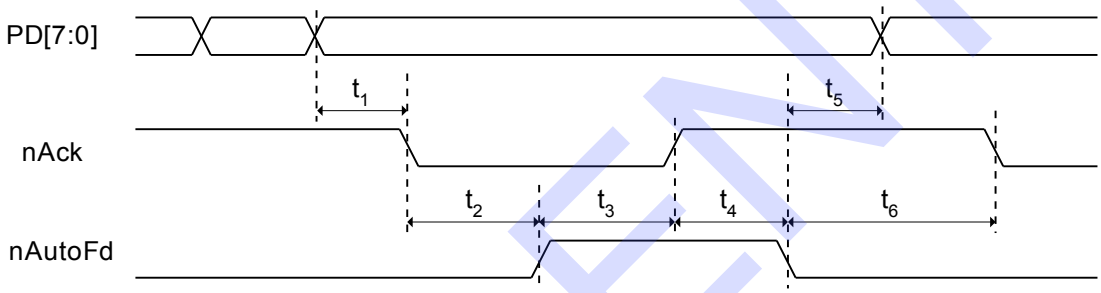

CONFIDENTIAL

11.9 RSMRST# and ACPI Power Control Signal Timings

Symbol	Parameter	Typ.	Unit
t_1	RSMRST# de-actives delay from 3VSB=3V	175	msec
$t_{2*Note1}$	PWRGD3 active delay from 0.8 * AVCC3	Reference: Section 11.10	msec
t_3	Overlap of PSON# and 3VSBSW#	10	msec
t_4	Delay time of 3VSBSW# falling edge to PWRGD3 falling edge	<1	msec
t_5	Delay time of 3VSBSW# rising edge to PWRGD3 rising edge	1 Note:2A<Bit 0>=0 (Default)	usec
$t_{5'}$		135 Note:2A<Bit 0>=1	msec

Figure 11-9. RSMRST# Timings

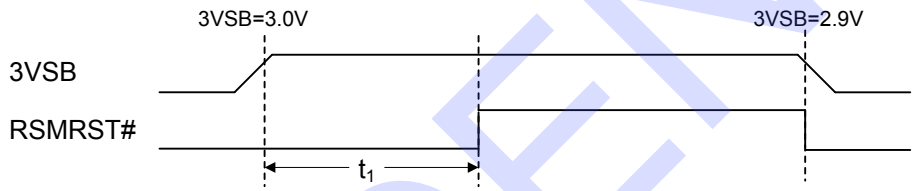

Figure 11-10. PWRGD3 Timings

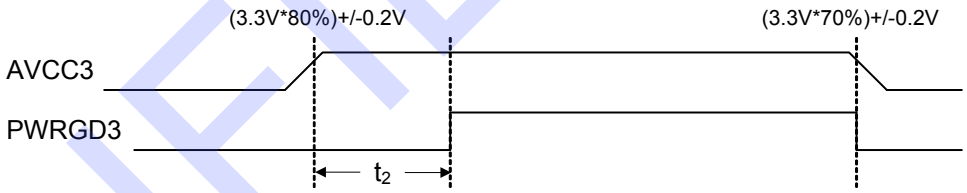

Figure 11-11. ACPI Power Signal Timings

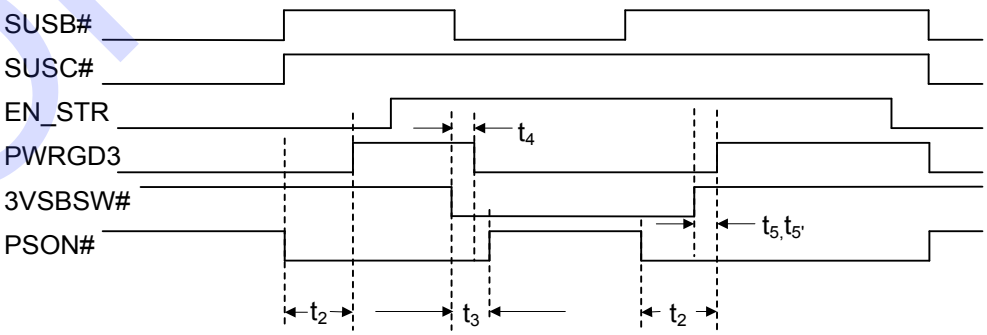

CONFIDENTIAL

11.10 PWRGD2, PWRGD3 Signal Timings

Symbol	Parameter	Min.	Typ.	Max.
t_6	Delay time of (3V/12V reach 80% detected AND SUSB#) to internal_GD.		<1ms	
t_8	Delay time of internal_GD to PWRGD2 rising edge	43ms	57ms	71ms
t_9	Delay time of internal_GD to PWRGD3 rising edge	125ms	166ms	208ms
t_{10}	Delay time of SUSB# falling edge to PWRGD falling edge		< 1us.	

Figure 11-12. PWRGD2/3 Signal Condition

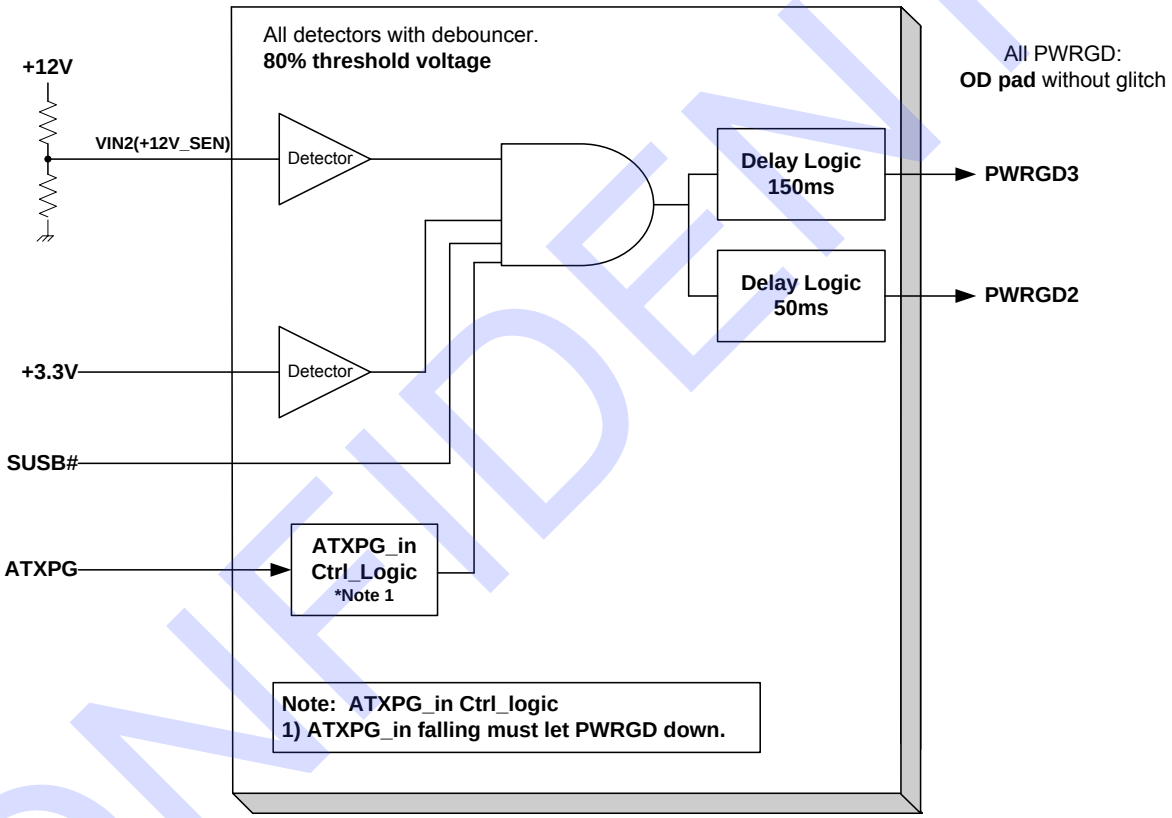

CONFIDENTIAL

Figure 11-13. PWRGD2/3 Signal Timings

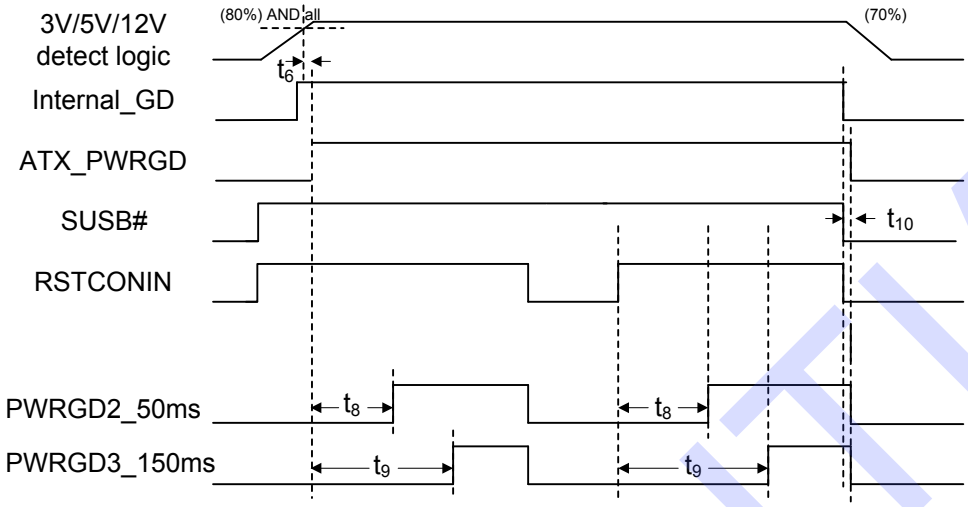

Figure 11-14. PCIRST#1 Signal Timings

CONFIDENTIAL

11.11 Energy-using Product (EuP) Power Control Signal Timings

Symbol	Parameter	Min.	Typ.	Max.
t_{11}	Delay time of RSMRST# rising to first PWRON# pulse.	-	200ms	-
t_{12}	Delay time of AVCC3 falling edge to 5VSB_CTRL# rising edge.	-	5.2s	-

Figure 11-15. EuP Function Signal Timings

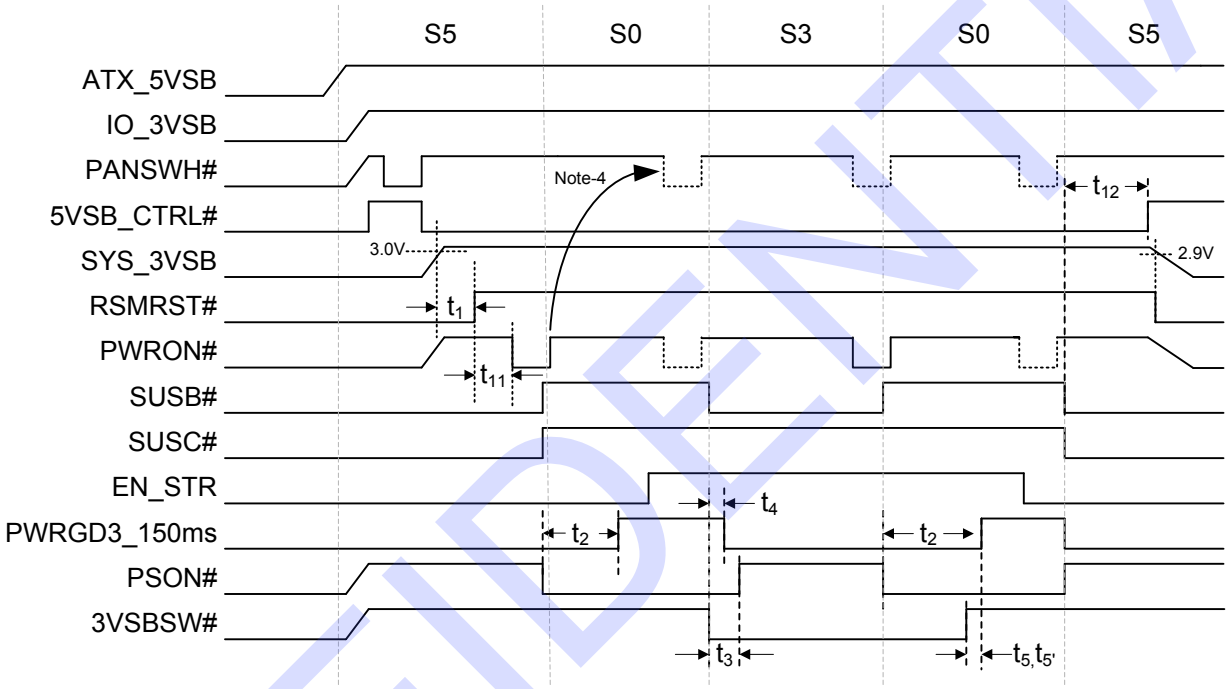

CONFIDENTIAL

11.12 APL/GLK Forced Shutdown Timing

Figure 11-16. APL/GLK Forced Shutdown Timing

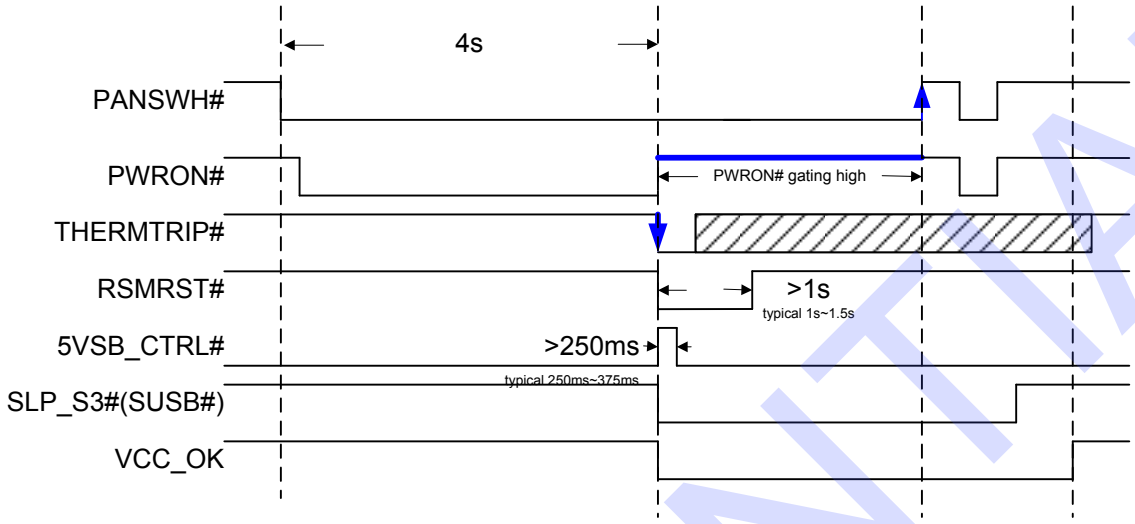

CONFIDENTIAL

11.13 S0ix Sequence Timing

Figure 11-17. S0ix Sequence Timing

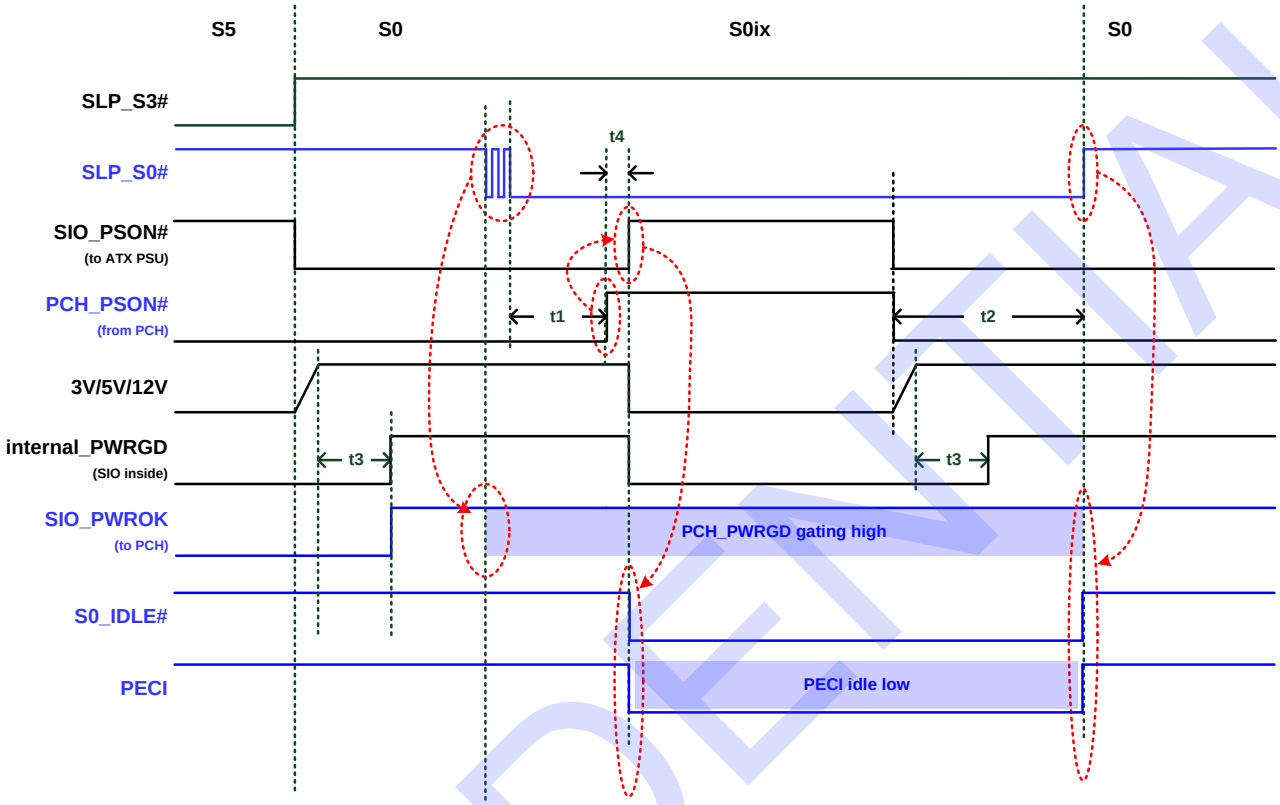

t1: SLP_S0# falling to PCH_PS_ON# rising delay time (programmable by PCH)

t2: PCH_PS_ON# falling to SLP_S0# rising delay time (programmable by PCH)

t3: SIO_PWRGD delay time 150ms

t4: PCH_PSON# to SIO_PSON# delay time < 100us (programmable by SIO)

CONFIDENTIAL

12. Package Information

LQFP 128(14*14) Outline Dimensions unit: inches/mm

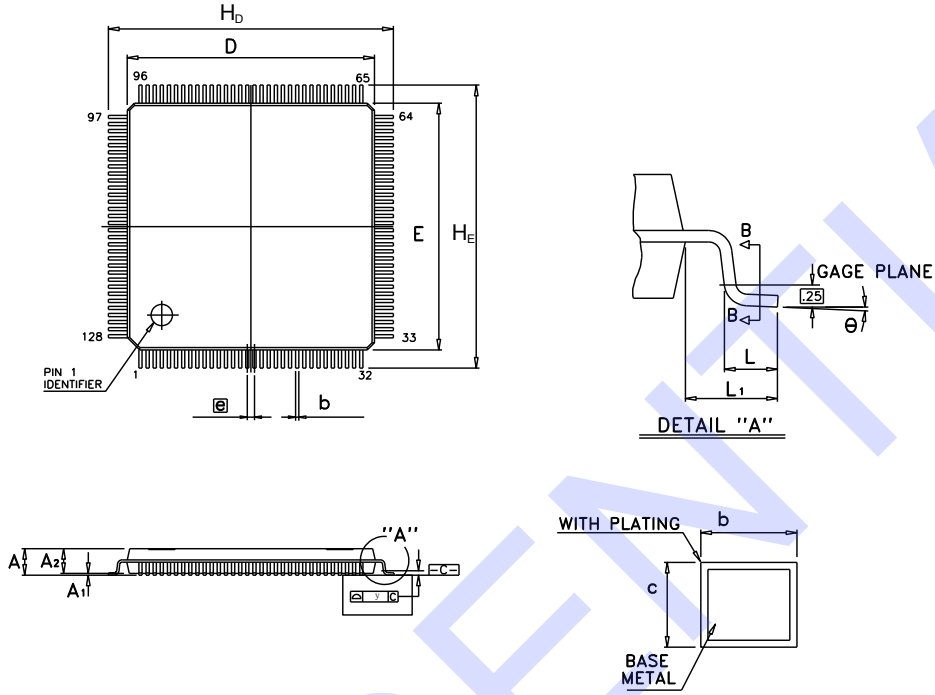

Symbol	Dimensions in inches			Dimensions in mm		
	Min.	Nom.	Max.	Min.	Nom.	Max.
A	-	-	0.063	-	-	1.60
A1	0.002	-	-	0.05	-	-
A2	0.053	0.055	0.057	1.35	1.40	1.45
b	0.005	0.007	0.009	0.13	0.18	0.23
c	0.004	-	0.008	0.09	-	0.20
D	0.547	0.551	0.555	13.90	14.00	14.10
E	0.547	0.551	0.555	13.90	14.00	14.10
e	0.016 BSC			0.40 BSC		
H_D	0.624	0.630	0.636	15.85	16.00	16.15
H_E	0.624	0.630	0.636	15.85	16.00	16.15
L	0.018	0.024	0.030	0.45	0.60	0.75
L_1	0.039 REF			1.00 REF		
y	-	-	0.004	-	-	0.10
θ	0°	3.5°	7°	0°	3.5°	7°

Notes:
1. Dimensions D and E do not include mold protrusion.
2. Dimensions b does not include dambar protrusion.
3. Total in excess of the b dimension at maximum material condition.
4. Dambar cannot be located on the lower radius of the foot.
5. Controlling dimensions: Millimeter
6. Reference document: JEDEC MS-026

DI-LQFP128(14*14)v4

CONFIDENTIAL

This page is intentionally left blank.

CONFIDENTIAL

13. Ordering Information

Part No.	Package
IT8786E-I/HX	LQFP 128

All green components provided are in compliance with RoHS, and Halogen-Free.

CONFIDENTIAL

This page is intentionally left blank.

CONFIDENTIAL

14. Top Marking Information

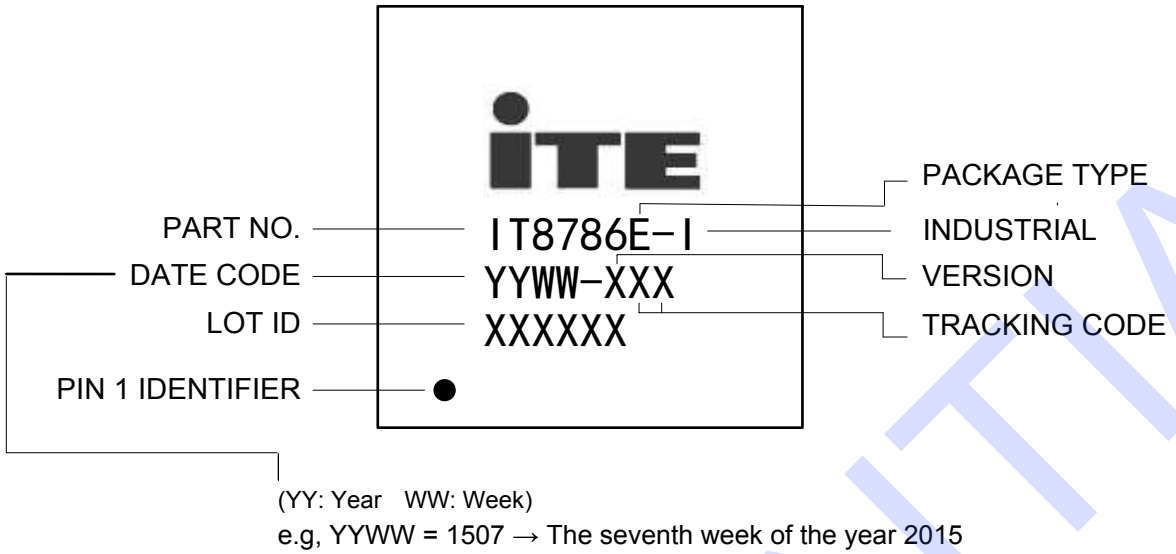

CONFIDENTIAL

ITE TECH. INC. TERMS AND CONDITIONS OF SALE (Rev: 2013)

0. PARTIES

ITE Tech. Inc. ("Seller") is a company headquartered in Taiwan, Republic of China, and incorporated under laws of Republic of China, Buyer is a company or an entity, purchasing product from ITE Tech. Inc.

1. ACCEPTANCE OF TERMS

BUYER ACCEPTS THESE TERMS (i) BY WRITTEN ACCEPTANCE (BY PURCHASE ORDER OR OTHERWISE), OR (ii) BY FAILURE TO RETURN GOODS DESCRIBED ON THE FACE OF THE PACKING LIST WITHIN FIVE DAYS OF THEIR DELIVERY.

2. DELIVERY

(a) Otherwise specified in the order agreed by Seller, delivery will be made Free Carrier (Incoterms), Seller's warehouse, Science-Based Industrial Park, Hsinchu, Taiwan.
(b) Title to the goods and the entire risk will pass to Buyer upon delivery to carrier.
(c) Shipments are subject to availability. Seller shall make every reasonable effort to meet the date(s) quoted or acknowledged; and if Seller makes such effort, Seller will not be liable for any delays.

3. TERMS OF PAYMENT

(a) Terms are as stated on Seller's quotation, or if none are stated, net thirty (30) days. Accounts past due will incur a monthly charge at the rate of one percent (1%) per month (or, if less, the maximum allowed by applicable law) to cover servicing costs.
(b) Seller reserves the right to change credit terms at any time in its sole discretion.

4. LIMITED WARRANTY

(a) Seller warrants that the goods sold will be free from defects in material and workmanship and comply with Seller's applicable published specifications for a period of ninety (90) days from the date of Seller's delivery. Within the warranty period and by obtaining a return number from Seller, Buyer may request replacement or repair for defective goods.
(b) Goods or parts which have been subject to abuse (including without limitation repeated or extended exposure to conditions at or near the limits of applicable absolute ratings) misuse, accident, alteration, neglect, or unauthorized repair or improper application are not covered by any warranty. No warranty is made with respect to custom products or goods produced to Buyer's specifications (unless specifically stated in a writing signed by Seller).
(c) No warranty is made with respect to goods used in devices intended for use in applications where failure to perform when properly used can reasonably be expected to result in significant injury (including, without limitation, navigation, aviation or nuclear equipment, or for surgical implant or to support or sustain life) and Buyer agrees to indemnify, defend, and hold harmless Seller from all claims, damages and liabilities arising out of any such uses.
(d) This Paragraph 4 is the only warranty by Seller with respect to goods and may not be modified or amended except in writing signed by an authorized officer of Seller.
(e) Buyer acknowledges and agrees that it is not relying on any applications, diagrams or circuits contained in any literature, and by its conditions Buyer will test all parts and applications under extended field and laboratory conditions. Notwithstanding any cross-reference or any statements of compatibility, functionality, interchangeability, and the like, the goods may differ from similar goods from other vendors in performance, function or operation, and in areas not contained in the written specifications, or as to ranges and conditions outside such specifications; and Buyer agrees that there are no warranties and that Seller is not responsible for such things.
(f) EXCEPT AS PROVIDED ABOVE, SELLER MAKES NO WARRANTIES OR CONDITIONS, EXPRESS, IMPLIED, OR STATUTORY; AND SELLER EXPRESSLY EXCLUDES AND DISCLAIMS ANY WARRANTY OR CONDITION OF MERCHANTABILITY OR FITNESS FOR PARTICULAR PURPOSE OR APPLICATION.

5. LIMITATION OF LIABILITY

(a) Seller will not be liable for any loss, damage or penalty resulting from causes beyond its reasonable control, including but not limited to delay by others, force majeure, acts of God, or labor conditions. In any such event, the date(s) for Seller's performance will be deemed extended for a period equal to any delay resulting.
(b) THE LIABILITY OF SELLER ARISING OUT OF THE CONTRACT OR ANY GOODS SOLD WILL BE LIMITED TO REFUND OF THE PURCHASE PRICE OR REPLACEMENT OF PURCHASED GOODS (RETURNED TO SELLER FREIGHT PRE-PAID) OR, WITH SELLER'S PRIOR WRITTEN CONSENT, REPAIR OF PURCHASED GOODS.
(c) Buyer will not return any goods without first obtaining a customer return order number.
(d) AS A SEPARATE LIMITATION, IN NO EVENT WILL SELLER BE LIABLE FOR COSTS OF SUBSTITUTE GOODS; FOR ANY SPECIAL, CONSEQUENTIAL, INCIDENTAL OR INDIRECT DAMAGES; OR LOSS OF USE, OPPORTUNITY, MARKET POTENTIAL, AND/OR PROFIT ON ANY THEORY (CONTRACT, TORT, FROM THIRD PARTY CLAIMS OR OTHERWISE). THESE LIMITATIONS SHALL APPLY NOTWITHSTANDING ANY FAILURE OF ESSENTIAL PURPOSE OF ANY REMEDY.

(e) No action against Seller, whether for breach, indemnification, contribution or otherwise, shall be commenced more than one year after the cause of action has accrued, or more than one year after either the Buyer, user or other person knew or with reasonable diligence should have known of the matter or of any claim of dissatisfaction or defect involved; and no such claim may be brought unless Seller has first been given commercially reasonable notice, a full written explanation of all pertinent details, and a good faith opportunity to resolve the matter.
(f) BUYER EXPRESSLY AGREES TO THE LIMITATIONS OF THIS PARAGRAPH 5 AND TO THEIR REASONABLENESS.

6. SUBSTITUTIONS AND MODIFICATIONS

Seller may at any time make substitutions for product ordered which do not materially and adversely affect overall performance with the then current specifications in the typical and intended use. Seller reserves the right to halt deliveries and shipments and alter specifications and prices without notice. Buyer shall verify that the literature and information is current before purchasing.

7. CANCELLATION

The purchase contract may not be canceled by Buyer except with written consent by Seller and Buyer's payment of reasonable cancellation charges (including but not be limited to expenses already incurred for labor and material, overhead, commitments made by Seller, and a reasonable profit).

8. INDEMNIFICATION

Seller will, at its own expense, assist Buyer with technical support and information in connection with any claim that any parts as shipped by Seller under the purchase order infringe any valid and enforceable copyright, or trademark, provided however, that Buyer (i) gives immediate written notice to Seller, (ii) permits Seller to participate and to defend if Seller requests to do so, and (iii) gives Seller all needed information, assistance and authority. However, Seller will not be responsible for infringements resulting from anything not entirely manufactured by Seller, or from any combination with products, equipment, or materials not furnished by Seller. Seller will have no liability with respect to intellectual property matters arising out of products made to Buyer's specifications, code, or designs.

Except as expressly stated in this Paragraph 8 or in another writing signed by an authorized officer, Seller makes no representations and/or warranties with respect to intellectual and/or industrial property and/or with respect to claims of infringement. Except as to claims Seller agrees in writing to defend, BUYER WILL INDEMNIFY, DEFEND AND HOLD HARMLESS SELLER FROM ALL CLAIMS, COSTS, LOSSES, AND DAMAGES (INCLUDING ATTORNEYS FEES) AGAINST AND/OR ARISING OUT OF GOODS SOLD AND/OR SHIPPED HEREUNDER.

9. NO CONFIDENTIAL INFORMATION

Seller shall have no obligation to hold any information in confidence except as provided in a separate non-disclosure agreement signed by both parties.

10. ENTIRE AGREEMENT

(a) These terms and conditions are the entire agreement and the only representations and understandings between Seller and Buyer, and no addition, deletion or modification shall be binding on Seller unless expressly agreed to in written and signed by an officer of Seller.
(b) Buyer is not relying upon any warranty or representation except for those specifically stated here.

11. APPLICABLE LAW

The contract and all performance and disputes arising out of or relating to goods involved will be governed by the laws of R.O.C. (Taiwan, Republic of China), without reference to the U.N. Convention on Contracts for the International Sale of Goods or to conflict of laws principles. Buyer agrees at its sole expense to comply with all applicable laws in connection with the purchase, use or sale of the goods provided hereunder and to indemnify Seller from any failure by Buyer to so comply. Without limiting the foregoing, Buyer certifies that no technical data or direct products thereof will be made available or re-exported, directly or indirectly, to any country to which such export or access is prohibited or restricted under R.O.C. laws or U.S. laws or regulations, unless prior authorization is obtained from the appropriate officials and agencies of the government as required under R.O.C. or U.S. laws or regulations.

12. JURISDICTION AND VENUE

The courts located in Hsinchu, Taiwan, Republic of China, will have the sole and exclusive jurisdiction and venue over any dispute arising out of or relating to the contract or any sale of goods hereunder. Buyer hereby consents to the jurisdiction of such courts.

13. ATTORNEYS' FEES

Reasonable attorneys' fees and costs will be awarded to the prevailing party in the event of litigation involving and/or relating to the enforcement or interpretation of the contract and/or any goods sold under it.

CONFIDENTIAL