SENSYLINK Microelectronics

(CT7432)

2-CH Remote and 1-CH Local Temperature Sensor

CT7432 is a 3-channels (2-channels Remote and 1-channel Local) Temperature Sensor with ±1°C Accuracy and SMBus Digital Interface.
It is ideally used in Temperature Sensing and Monitoring Systems, such as Computer, Server and Telecom Equipment System etc.

Table of Contents

Description 4
Features 4
Applications 4
PIN Configurations (Top View) 4
Typical Application 4
Pin Description 5
Function Block 5
Ordering Information (Note 1) 6
Absolute Maximum Ratings (Note 2) 8
Recommended Operating Conditions 8
Electrical Characteristics (Note 3) 9
1 Function Descriptions 15
1.1 Digital Output of Temperature Data 15
1.2 Higher than 128℃ 16
1.3 Operating Mode, Active and Standby 16
1.4 Register Map (Note 4) 17
1.5 Register Description 19
1.5.1 Temperature Data, including 1 Local Channel and 2 Remote Channels 19
1.5.2 STATUS Register, to indicate the chip Alert, Therm and remote diodes open Status 19
1.5.3 ConfigurationRegisters, including Configuration 1 and 2 21
1.5.4 Conv_Rate, Conversion Rate Setup Register of ADC 21
1.5.5 ALT_THM_CON, ALERT and THERM Consecutive Setup 22
1.5.6 One_Shot_Con, used for One Time Conversion 22
1.5.7 ALERT LIMIT, including Local and Remote Channels high/low-limit 22
1.5.8 THERM LIMIT, including Local and Remote Channels THERM Limit 23
1.5.9 THERM_HYS, THERM Limit HysteresisTemperature 24
1.5.10 Beta Compensation, for Remote Channel 1 and 2 24
1.5.11 N-Factor_Correction, for Remote Channel 1 and 2 25
1.5.12 CH_Mask, Mask Setup individually for each channel 25
1.5.13 Device_ID 26
1.5.14 Manufacturer_ID 26
1.6 SMBus Digital Interface 27
1.6.1 Slave Address 27
1.6.2 Timeout 28
1.6.3 General Call Reset 28
1.6.4 SMBus Protocal 28
1.6.5 Compatible with I^2C 29
1.7 ALERT Output 29
1.7.1 Alert Trigger Release Condition 1 31
1.7.2 Alert Trigger Release Condition 2 32
1.8 THERM Output 33
1.9 Remote Diode Fault Alarm and Diode Selection 33
1.10 Beta Compensation 34
1.11 Series Resistance Cancellation 34
1.12 N-Factor Correction 35
1.13 POR 35
1.14 UVLO 35

2 Applications Information 36

2.1 How to Improve Temperature Accuracy 36

2.1.1 Serial Resistor (R_S), Differential Capacitor (C_d) of Remote Channel *36*

2.1.2 Thermal Response Time *37*

2.1.3 Self-heating *37*

2.2 PCB Layout 37

2.2.1 Device placement *37*

2.2.2 DP, DN Route in PCB *37*

2.2.3 Twisted cable and shield *37*

2.2.4 Leakage from DP/DN to GND or VCC *38*

Package Outline Dimensions (MSOP-10) 39

Recommend Land Pattern Layout (MSOP-10) 40

Package Outline Dimensions (DFN3x3-10) 41

Recommend Land Pattern Layout (DFN3x3-10) 42

Packing information 43

Revision History 44

Figures and Tables

Figure 1. Typical Application of CT7432 4
Figure 2. CT7432 Function Block 5
Figure 3. Temperature Accuracy vs. Temperature (Local) .. 10
Figure 4. Temperature Accuracy vs. Temperature (Remote) 10
Figure 5. Temperature Accuracy vs. Supply Voltage (Local)10
Figure 6.Temperature Accuracy vs. Supply Voltage (Remote) 10
Figure 7. Conversion Current vs. Supply Voltage 10
Figure 8. Shutdown Current vs. Supply Voltage 10
Figure 9. Temperature Accuracy vs. Serial Resistance..... 11
Figure 10. Temperature Accuracy vs. Differential Capacitance 11
Figure 11. Local Channel Temperature Distribution..... 11
Figure 12. Remote Channel Temperature Distribution..... 11
Figure 13. SMBus Timing Diagram..... 12
Figure 14. SMBus 1-byte Write Timing Diagram..... 12
Figure 15. SMBus 1-byte Read Timing Diagram..... 13
Figure 16. SMBus 2-byte Write Timing Diagram..... 13
Figure 17. SMBus2-byte Read Timing Diagram..... 14
Figure 18. SMBus ALERT Response Diagram 14
Figure 19. ALERT Pin Output Diagram..... 32
Figure 20. ALERT Pin in SMBus ARA 32
Figure 21. THERM pin and THERM2 pin output 33
Figure 22. External Diode for Remote Channel 34
Figure 23. Rs and Cd for Remote Channel..... 36

Table 1. Sensor Temperature in 12-bit Digital Data (RANGE bit = 0, default) 15
Table 2. Sensor Temperature in 12-bit Digital Data (RANGE bit = 1)..... 15
Table 3. Temperature Range Setup 16
Table 4. CT7432 Register Map 17
Table 5. CT7432A Register Map 18

±1°C 3-CH (2-CH Remote and 1-CH Local) Digital Temperature Sensor with Automatic Beta Compensation

Description

The CT7432 is a 3-channel digital temperature sensor with ±1°C accuracy. Temperature data can be read out directly via SMBus interface by MCU or SOC chip.

CT7432 has three independent channels: 2 remote and1 local. The remote channels could be connected to an external Diode, BJT transistor (diode-connected mode), or parasitic PNP BJT transistor inside the CPU, GPU, FPGA or SOC chip. Based on this, this chip can be used to monitor CPU, GPU, MCU, SOC, FPGA or DSP chip die and case temperature.

Each chip is calibrated in factory before shipment to customers. There is no need re-calibration anymore for ±1°C accuracy.

It includes a band-gap circuit, an analog to digital converter(ADC), a calibration unit with non-volatile memory and a digital interface block.

It integrates a 12-bit ADC, which can offer 0.0625°C resolution.The maximum temperature readout range can be extended from -64°C to 191°C by setting configuration1 register.

It has 2 logic output pin($\overline{\text{ALERT}}$ and $\overline{\text{THERM}}$) with open drain structure, which are active low as default. Also $\overline{\text{ALERT}}$ pin can be configured as $\overline{\text{THERM2}}$ pin.

Features

- Operation Voltage: 2.7V to 5.5V
- Average Operating Current:16uA (Typ.)at 0.0625 Con/s, VCC = 3.3V
- Shutdown Current: 3.0uA (Typ.)
- Temperature Accuracy without calibration for each channel:±1°C from 0°C to 100°C
- 12 bit ADC for 0.0625°C resolution
- Digital interface compatible with SMBus and I²C
- Temperature Range up to from -64°C to 191°C by setting RANGE bit as 1
- Programmable high/low-limit ALERT and THERM Temperature with Hysteresis
- Automatic beta compensation, Serial Resistance Cancellation, n-Factor correction and Thermal Diode Fault Detection for each remote channel
- Support SMBus ALERT Response Address (ARA)
- Multiple Slave address options
- CT7432A SMBus slave address is determined by the pull-up resistor on the THERM pin
- Temperature Range:
  -40°C to 125°C for sensor chip,
  -50°C to 150°C for remote diodes
- Available package:MSOP-10, DFN3x3-10

Applications

- Computer (Desktop & Notebook)
- Server
- Telecom Equipment, Embedded applications

PIN Configurations (Top View)

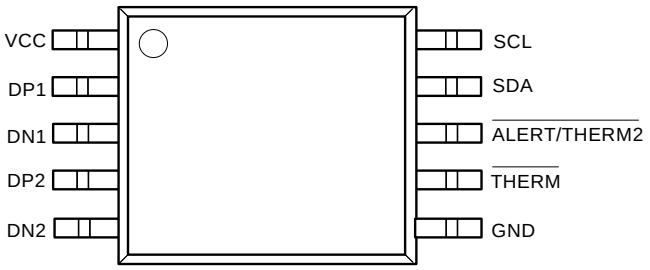

MSOP-10

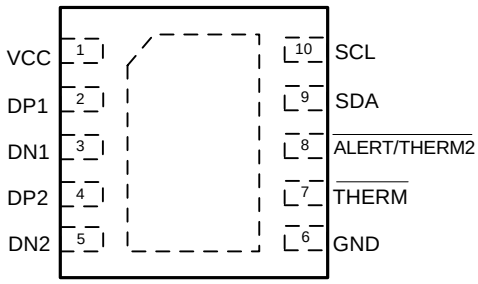

DFN3X3-10

Typical Application

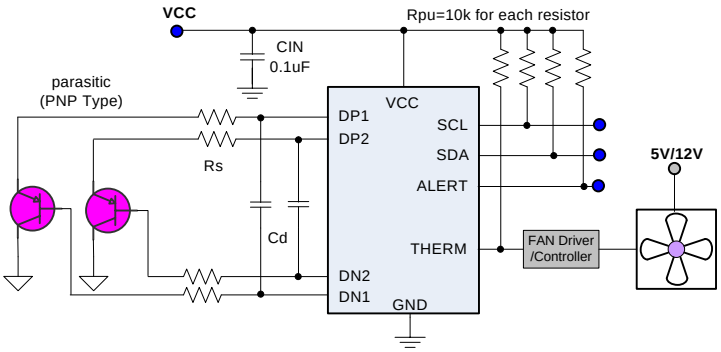

Figure 1. Typical Application of CT7432

Pin Description

PIN No.	PIN Name	Description
1	VCC	Power supply input pin, using 0.1uF low ESR ceramic capacitor to ground
2	DP1	Remote channel 1 positive input pin, it could be positive node of diodes, or BJT transistor (diode-connected mode). It is recommended to use bypass capacitor (Cd = 100pF) plus serial resistor (Rs =50 ohm) to remove noise between DP1 and DN1 pin.
3	DN1	Remote channel 1 negative input pin, it could be negative node of diodes, or BJT transistor (diode-connected mode). It is recommended to use bypass capacitor (Cd = 100pF) plus serial resistor (Rs =50ohm) to remove noise between DP1 and DN1 pin.
4	DP2	Remote channel 2 positive input pin, it could be positive node of diodes, or BJT transistor (diode-connected mode). It is recommended to use bypass capacitor (Cd = 100pF) plus serial resistor (Rs =50 ohm) to remove noise between DP2 and DN2 pin.
5	DN2	Remote channel 2 negative input pin, it could be negative node of diodes, or BJT transistor (diode-connected mode). It is recommended to use bypass capacitor (Cd = 100pF) plus serial resistor (Rs =50ohm) to remove noise between DP2 and DN2 pin.
6	GND	Ground pin.
7	$\overline{\text{THERM}}$	Thermal output pin, open drain with active low. Need a pull-up resistor to VCC. For CT7432A, the resistor value determinates slave address. If the measured temperature exceeds THERM-limit (programmable by user), this pin will be activated. This pin can be used to control fan on/off.
8	$\overline{\text{ALERT/THERM2}}$	Alert output pin, open drain with active low. Need a pull-up resistor to VCC. If the measured temperature drops below the low-limit or exceeds high-limit, this pin will be activated. Also this pin can be used as 2nd THERM pin.
9	SDA	Digital interface data input and output pin, need a pull-up resistor to VCC in application.
10	SCL	Digital interface clock input pin, need a pull-up resistor to VCC in application.

Function Block

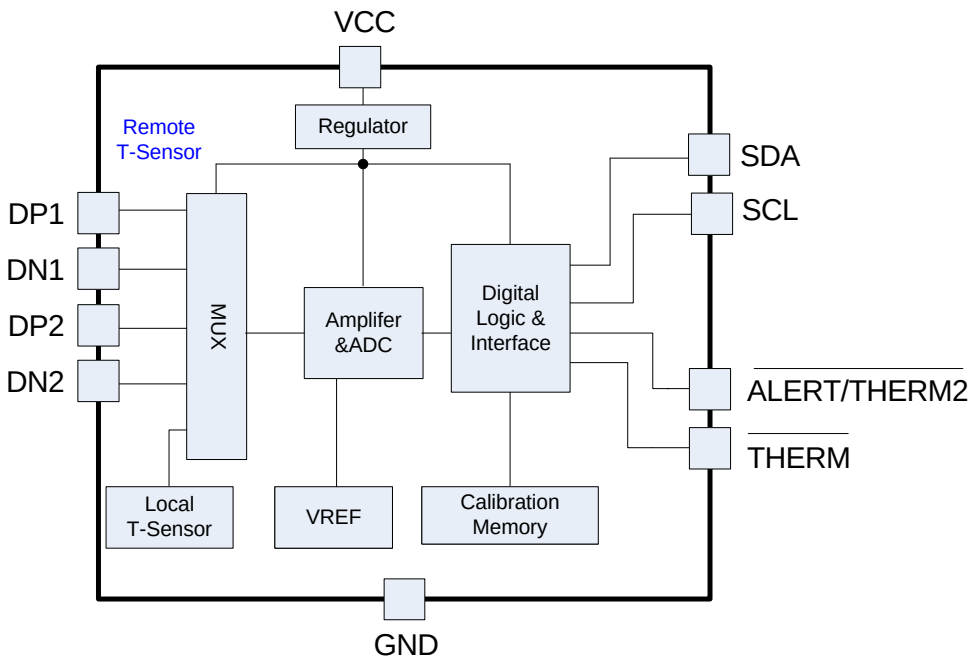

Figure 2. CT7432 Function Block

Ordering Information (Note 1)

CT7432/A X X X

Package Type
MM: MSOP-10
DN: DFN3x3-10

Packing
R: Tape & Reel

Slave Address(W/R)
Blank: 0x98/0x99
-A: 0x90/0x91
-B: 0x92/0x93
-C: 0x94/0x95
-D: 0x96/0x97
-E: 0x9A/0x9B
-F: 0x9C/0x9D
-G: 0x9E/0x9F

Order PN	Slave Address(W/R)[3]	Accuracy	Green[1]	Package	Marking ID[2]	Packing	MPQ	Operation Temperature
CT7432MMR	0x98/0x99	±1°C	Halogen free	MSOP-10	7432 YWWAXX	Tape & Reel	3,000	-40°C~+125°C
CT7432MMR-A	0x90/0x91	±1°C	Halogen free	MSOP-10	7432 YWWAXX	Tape & Reel	3,000	-40°C~+125°C
CT7432MMR-B	0x92/0x93	±1°C	Halogen free	MSOP-10	7432 YWWAXX	Tape & Reel	3,000	-40°C~+125°C
CT7432MMR-C	0x94/0x95	±1°C	Halogen free	MSOP-10	7432 YWWAXX	Tape & Reel	3,000	-40°C~+125°C
CT7432MMR-D	0x96/0x97	±1°C	Halogen free	MSOP-10	7432 YWWAXX	Tape & Reel	3,000	-40°C~+125°C
CT7432MMR-E	0x9A/0x9B	±1°C	Halogen free	MSOP-10	7432 YWWAXX	Tape & Reel	3,000	-40°C~+125°C
CT7432MMR-F	0x9C/0x9D	±1°C	Halogen free	MSOP-10	7432 YWWAXX	Tape & Reel	3,000	-40°C~+125°C
CT7432MMR-G	0x9E/0x9F	±1°C	Halogen free	MSOP-10	7432 YWWAXX	Tape & Reel	3,000	-40°C~+125°C
CT7432AMMR	XXX1_100(w/r)	±1°C	Halogen free	MSOP-10	7432A YWWAXX	Tape & Reel	3,000	-40°C~+125°C
CT7432AMMR-A	XXX1_000(w/r)	±1°C	Halogen free	MSOP-10	7432A YWWAXX	Tape & Reel	3,000	-40°C~+125°C
CT7432AMMR-B	XXX1_001(w/r)	±1°C	Halogen free	MSOP-10	7432A YWWAXX	Tape & Reel	3,000	-40°C~+125°C
CT7432AMMR-C	XXX1_010(w/r)	±1°C	Halogen free	MSOP-10	7432A YWWAXX	Tape & Reel	3,000	-40°C~+125°C
CT7432AMMR-D	XXX1_011(w/r)	±1°C	Halogen free	MSOP-10	7432A YWWAXX	Tape & Reel	3,000	-40°C~+125°C
CT7432AMMR-E	XXX1_101(w/r)	±1°C	Halogen free	MSOP-10	7432A YWWAXX	Tape & Reel	3,000	-40°C~+125°C
CT7432AMMR-F	XXX1_110(w/r)	±1°C	Halogen free	MSOP-10	7432A YWWAXX	Tape & Reel	3,000	-40°C~+125°C
CT7432AMMR-G	XXX1_111(w/r)	±1°C	Halogen free	DFN3x3-10	7432A YWWAXX	Tape & Reel	3,000	-40°C~+125°C
CT7432DNR	0x98/0x99	±1°C	Halogen free	DFN3x3-10	7432 YWWAXX	Tape & Reel	3,000	-40°C~+125°C
CT7432DNR-A	0x90/0x91	±1°C	Halogen free	DFN3x3-10	7432 YWWAXX	Tape & Reel	3,000	-40°C~+125°C
CT7432DNR-B	0x92/0x93	±1°C	Halogen free	DFN3x3-10	7432 YWWAXX	Tape & Reel	3,000	-40°C~+125°C
CT7432DNR-C	0x94/0x95	±1°C	Halogen free	DFN3x3-10	7432 YWWAXX	Tape & Reel	3,000	-40°C~+125°C
CT7432DNR-D	0x96/0x97	±1°C	Halogen free	DFN3x3-10	7432 YWWAXX	Tape & Reel	3,000	-40°C~+125°C
CT7432DNR-E	0x9A/0x9B	±1°C	Halogen free	DFN3x3-10	7432 YWWAXX	Tape & Reel	3,000	-40°C~+125°C
CT7432DNR-F	0x9C/0x9D	±1°C	Halogen free	DFN3x3-10	7432 YWWAXX	Tape & Reel	3,000	-40°C~+125°C
CT7432DNR-G	0x9E/0x9F	±1°C	Halogen free	DFN3x3-10	7432 YWWAXX	Tape & Reel	3,000	-40°C~+125°C
CT7432ADNR	XXX1_100(w/r)	±1°C	Halogen free	DFN3x3-10	7432A YWWAXX	Tape & Reel	3,000	-40°C~+125°C

CT7432ADNR-A	XXX1_000(w/r)	±1°C	Halogen free	DFN3x3-10	7432A YWWAXX	Tape & Reel	3,000	-40°C~+125°C
CT7432ADNR-B	XXX1_001(w/r)	±1°C	Halogen free	DFN3x3-10	7432A YWWAXX	Tape & Reel	3,000	-40°C~+125°C
CT7432ADNR-C	XXX1_010(w/r)	±1°C	Halogen free	DFN3x3-10	7432A YWWAXX	Tape & Reel	3,000	-40°C~+125°C
CT7432ADNR-D	XXX1_011(w/r)	±1°C	Halogen free	DFN3x3-10	7432A YWWAXX	Tape & Reel	3,000	-40°C~+125°C
CT7432ADNR-E	XXX1_101(w/r)	±1°C	Halogen free	DFN3x3-10	7432A YWWAXX	Tape & Reel	3,000	-40°C~+125°C
CT7432ADNR-F	XXX1_110(w/r)	±1°C	Halogen free	DFN3x3-10	7432A YWWAXX	Tape & Reel	3,000	-40°C~+125°C
CT7432ADNR-G	XXX1_111(w/r)	±1°C	Halogen free	DFN3x3-10	7432A YWWAXX	Tape & Reel	3,000	-40°C~+125°C

Note 1:

1. Based on ROHS Y2012 spec, Halogen free covers lead free. So most package types Sensylink offers only states halogen free, instead of lead free.

2. Marking ID includes 2 rows of characters. In general, the 1st row of characters are part number, and the 2nd row of characters are date code plus production information.

1) *Generally, date code is represented by 3 numbers. The number stands for year and work week information. e.g. 501stands for the first work week of year 2015;621 stands for the 21st work week of year 2016.*
2) *Right after the date code information, the next 2-3 numbers or letters are specified to stands for supplier or production location information.*

3. For CT7432A, Slave Address high 3bit is XXX, which means that the address of I^2C is determined by the external pull-up resistance of THERM pin. For specific I^2C address, please refer to 1.6.1 Slave Address.

Absolute Maximum Ratings (Note 2)

Parameter	Symbol	Value	Unit
Supply Voltage	V_{CC} to GND	-0.3 to 5.5	V
SDA, SCL Voltage	V_{SDA}/V_{SCL} to GND	-0.3 to 5.5	V
DP1/2 Voltage	$V_{DP1/2}$ to GND	-0.3 to Vcc+0.3	V
DN1/2 Voltage	$V_{DN1/2}$ to GND	-0.3 to 0.6	V
$\overline{\text{THERM}}$, $\overline{\text{ALERT}}$ Voltage	V_{THERM}/V_{ALERT} to GND	-0.3 to 5.5	V
Operation Junction Temperature	T_J	-50 to 150	ºC
Storage Temperature Range	T_{STG}	-65 to 150	ºC
Lead Temperature (Soldering, 10 Seconds)	T_{LEAD}	260	ºC
ESD Machine Mode	ESD_{MM}	400	V
ESD Human Body Mode	ESD_{HBM}	4000	V
ESD Charge Device Mode	ESD_{CDM}	1000	V

Note 2:

1. *Stresses greater than those listed under "Absolute Maximum Ratings" may cause permanent damage to the device. These are stress ratings only. Functional operation of the device at the "Absolute Maximum Ratings" conditions or any other conditions beyond those indicated under "Recommended Operating Conditions" is not recommended. Exposure to "Absolute Maximum Ratings" for extended periods may affect device reliability.*

Recommended Operating Conditions

Parameter	Symbol	Value	Unit
Supply Voltage	V_{CC}	2.7~ 5.5	V
Ambient Operation Temperature Range	T_A	-40~+125	°C

Electrical Characteristics (Note 3)

Test Condition: V_{CC} =3.3V,T_A=25℃, unless otherwise specified.

Parameter	Symbol	Test Conditions		Min	Typ	Max	Unit
Supply Voltage	V_{CC}			2.7		5.5	V
Temperature Accuracy (Remote Channel)	T_{RAC}	T_D = 0℃ to 100℃		-1.0		1.0	℃
		T_D = -40℃ to 125℃		-2.5		2.5	℃
Temperature Accuracy (Local Channel)	T_{LAC}	T_A = 0℃ to 110℃		-1.0		1.0	℃
		T_A = -40℃ to 125℃		-1.8		1.8	℃
Average Operating Current	I_{AOC}	V_{IN} = 3.3V, 0.0625Con/s			13	16	uA
		V_{IN} = 5.0V, 0.0625Con/s			21	25	uA
Shutdown Current	$I_{SHUTDOWN}$	Enable STB bit, force SDA/SCL to VCC or GND			3.0	6.0	uA
Open Drain Output Low Voltage	V_{OL}	$\overline{ALERT}$, $\overline{THERM}$ pin, sink 5mA		0		0.2	V
Open Drain Leakage	I_{ODL}	$\overline{ALERT}$, $\overline{THERM}$ pin		-1.0		1.0	uA
Conversion time	t_{CON}	Local channel			15		ms
		Remote channel	BC enable, SRC enable(1)		120		ms
			BC enable, SRC disable		47		ms
			BC disable, SRC enable		90		ms
			BC disable, SRC disable		41		ms
Digital Interface							
Logic Input Capacitance	C_{IL}	SDA, SCL pin			3.0		pF
Logic Input High Voltage	V_{IH}	SDA, SCL pin		1.4		VCC+0.3	V
Logic Input Low Voltage	V_{IL}	SDA, SCL pin		-0.3		0.45	V
Logic Input Current	I_{INL}	SDA, SCL pin		-1.0		1.0	uA
Logic Output Sink Current	I_{OLS}	SDA, $\overline{ALERT}$, $\overline{THERM}$ pin, forced 0.2V			5.0		mA
SCL frequency	f_{CLK}	SCL pin		10		400	kHz
Timeout of detecting clocklow period time	t_{TOUT}				30		ms
Clock low period time	t_{LOW}			1300			ns
Clock high period time	t_{HIGH}			600			ns
Bus free time	t_{BUF}	Between Stop and Start condition		1200			ns
Hold time after Start condition	$t_{HD:STA}$			600			ns
Repeated Start condition setup time	$t_{SU:STA}$			600			ns
Stop condition setup time	$t_{SU:STO}$			600			ns
Data Hold time	$t_{HD:DAT}$			100			ns
Data Setup time	$t_{SU:DAT}$			100			ns
Clock/Data fall time	t_F					300	ns
Clock/Data rise time	t_R					1000	ns

Note 3:

1. *All devices are 100% production tested at T_A = +25°C; all specifications over the full temperature range is guaranteed by design, not production tested.*
2. *BC means beta compensation; SRC means Series Resistance Cancellation.*

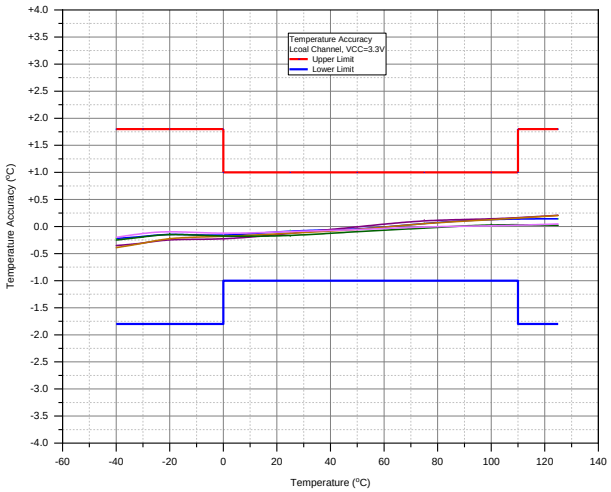

Figure 3. Temperature Accuracy vs. Temperature (Local)

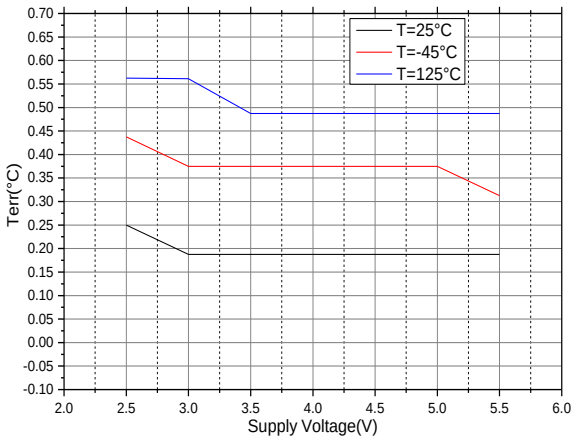

Figure 6.Temperature Accuracy vs. Supply Voltage (Remote)

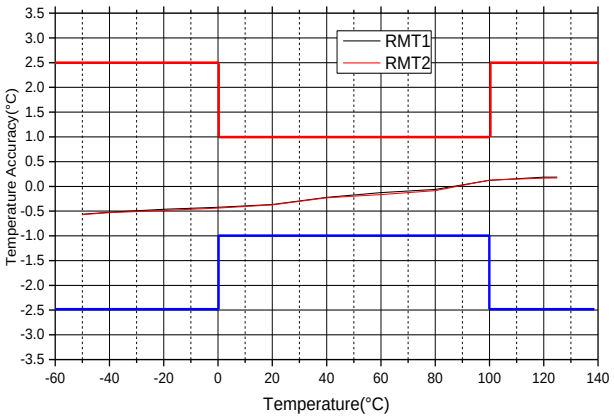

Figure 4. Temperature Accuracy vs. Temperature (Remote)

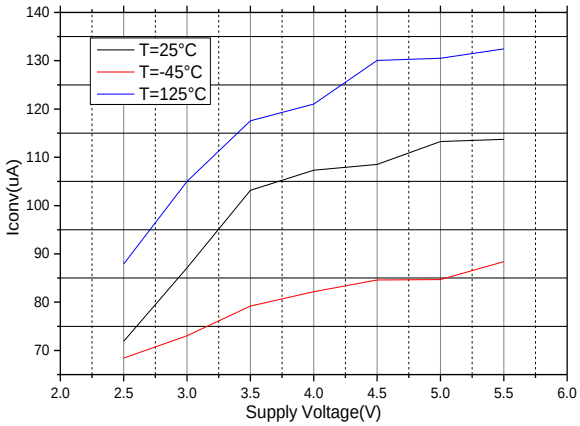

Figure 7. Conversion Current vs. Supply Voltage

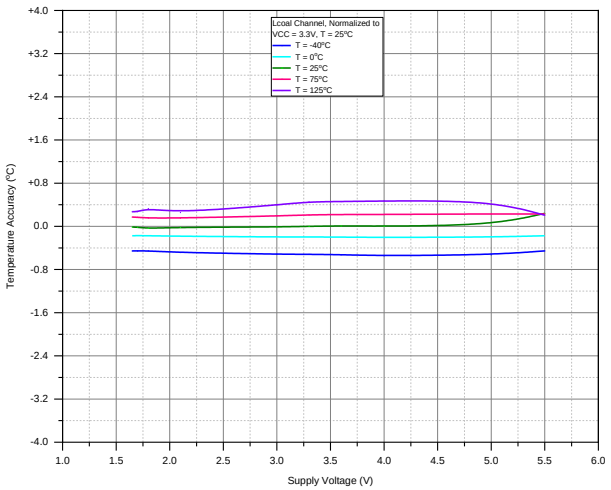

Figure 5. Temperature Accuracy vs. Supply Voltage (Local)

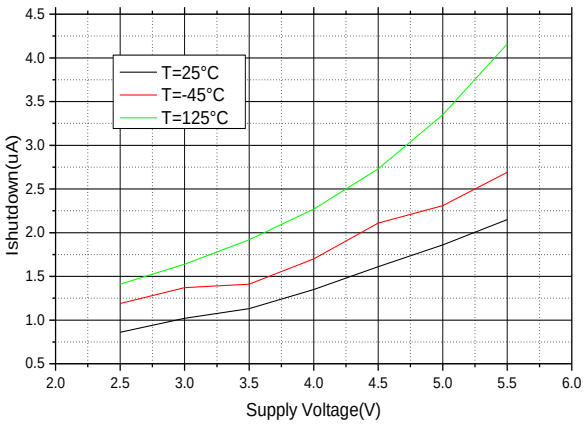

Figure 8. Shutdown Current vs. Supply Voltage

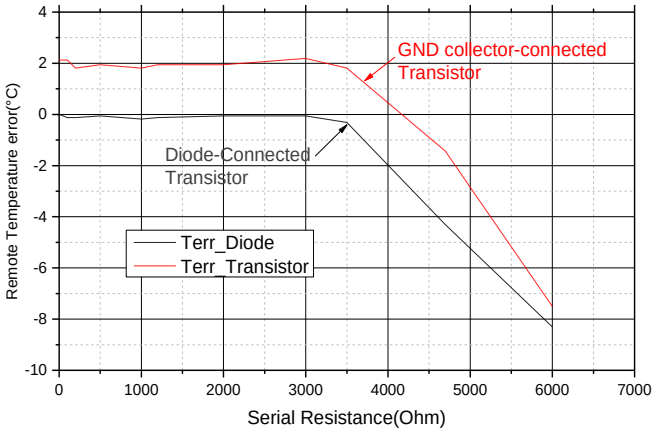

Figure 9. Temperature Accuracy vs. Serial Resistance

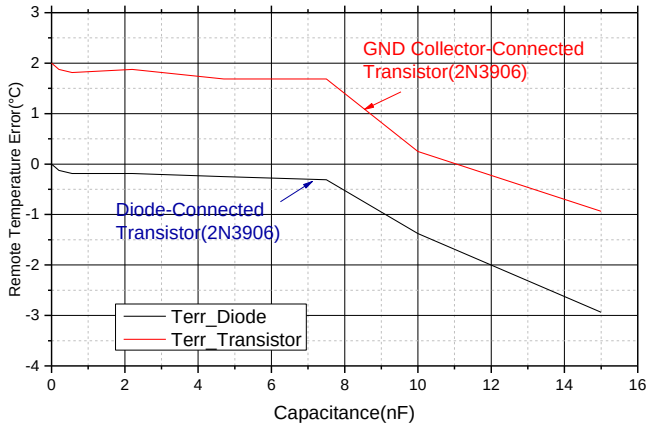

Figure 10. Temperature Accuracy vs. Differential Capacitance

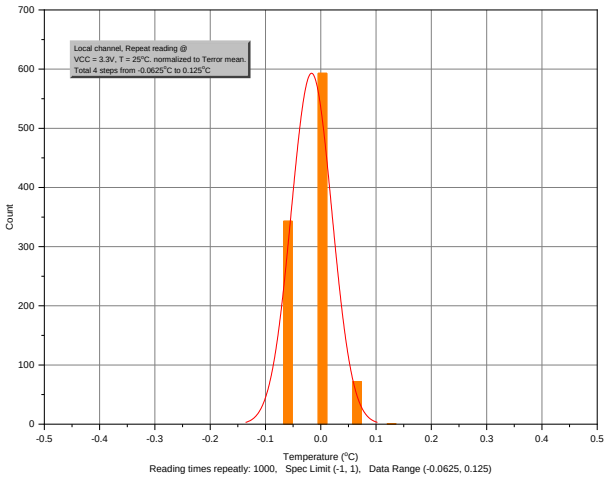

Figure 11. Local Channel Temperature Distribution

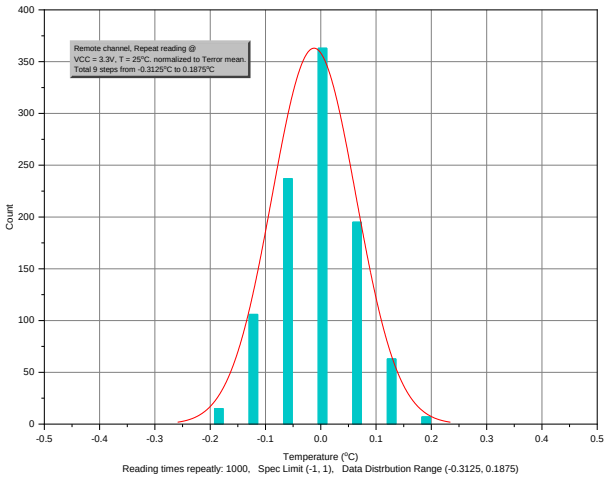

Figure 12. Remote Channel Temperature Distribution

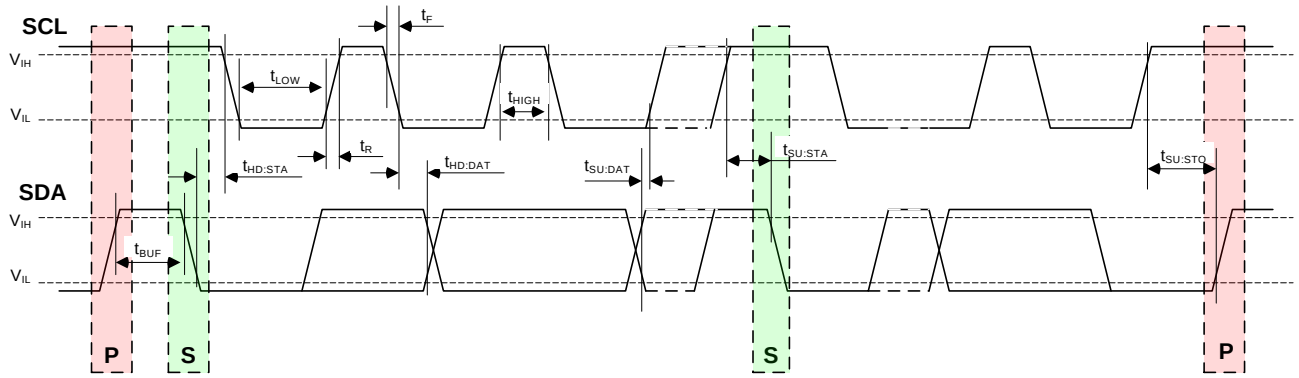

Figure 13. SMBus Timing Diagram

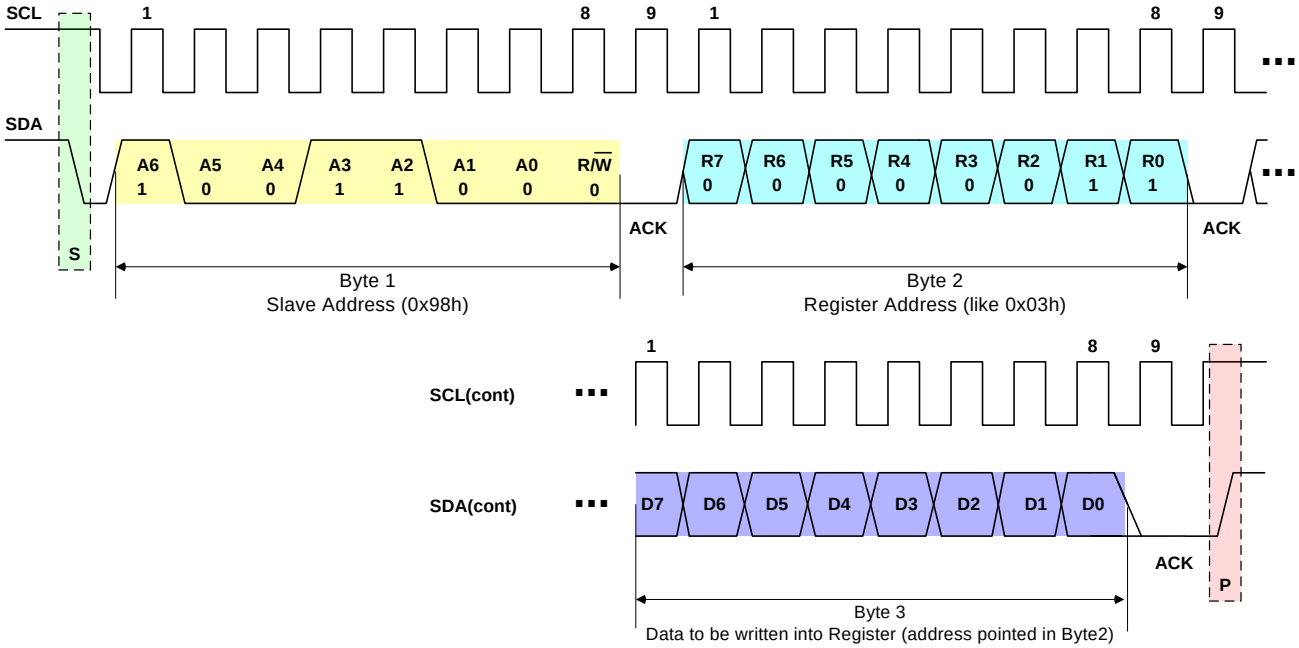

Figure 14. SMBus 1-byte Write Timing Diagram

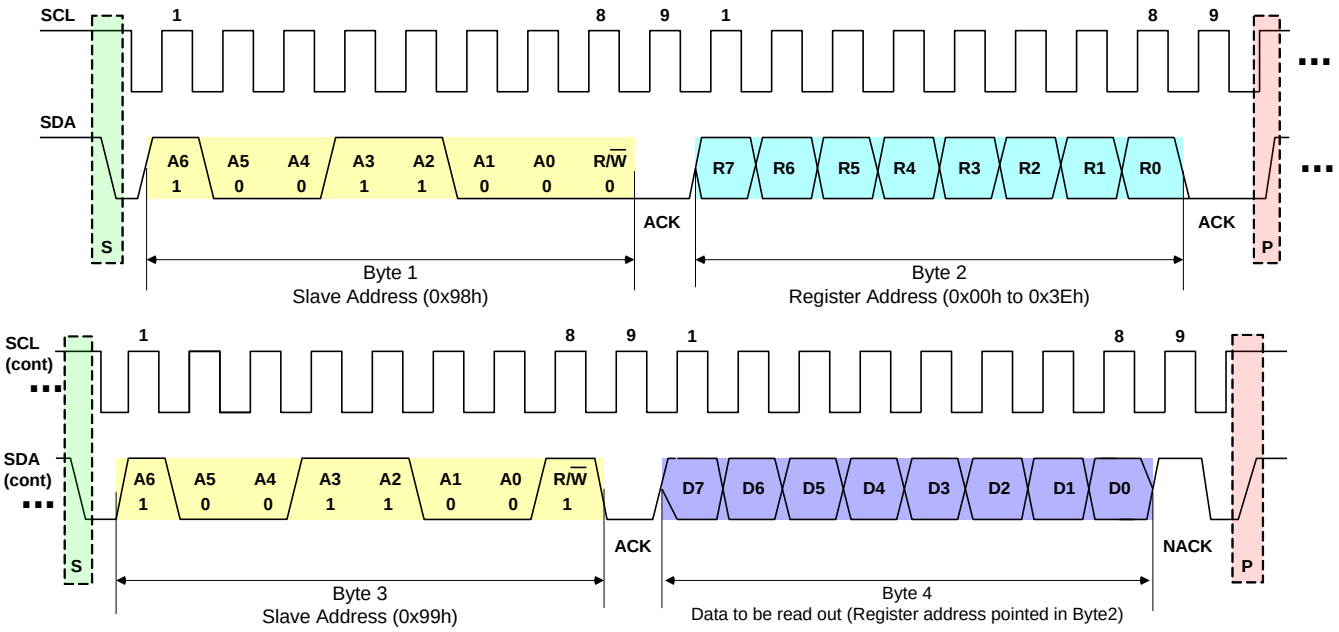

Figure 15. SMBus 1-byte Read Timing Diagram

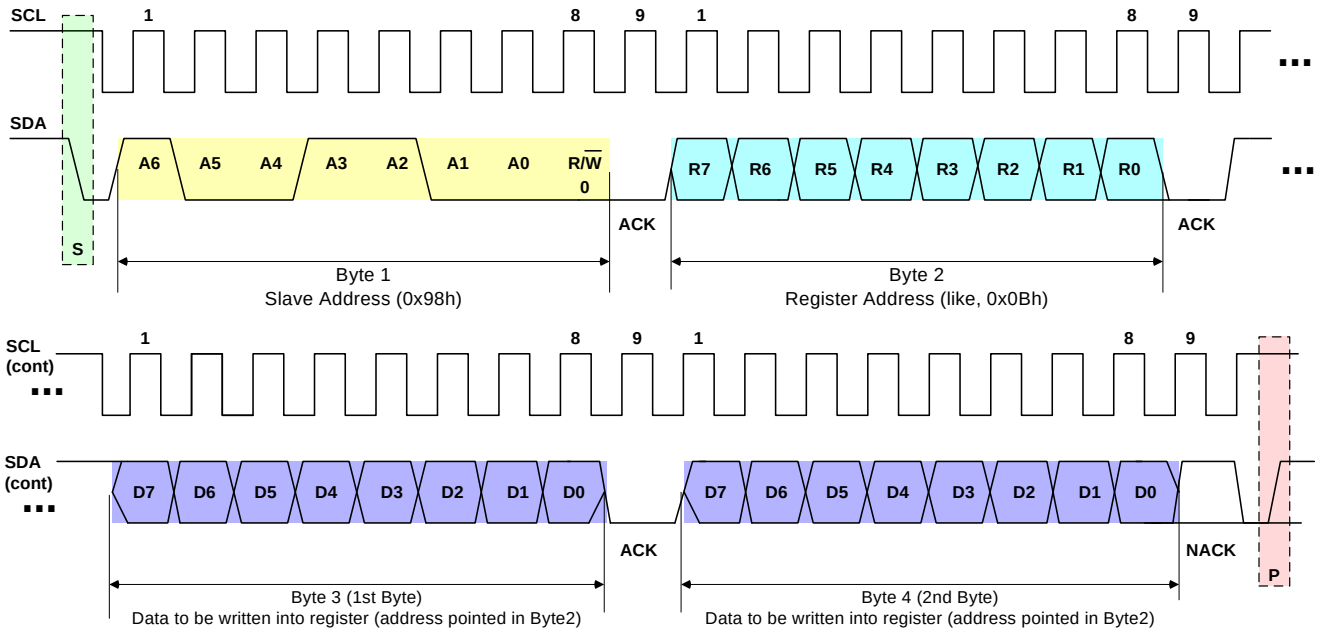

Figure 16. SMBus 2-byte Write Timing Diagram

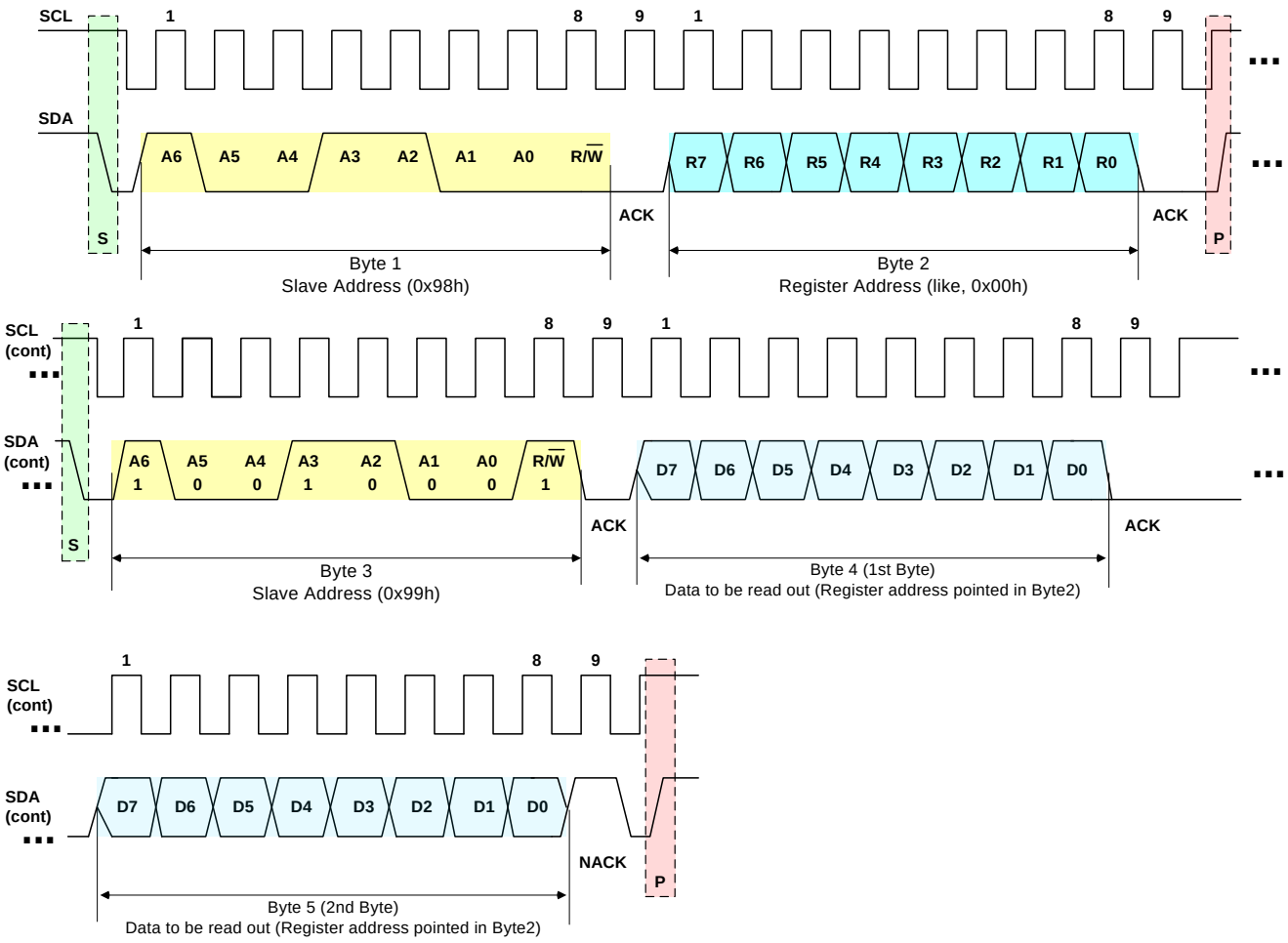

Figure 17. SMBus2-byte Read Timing Diagram

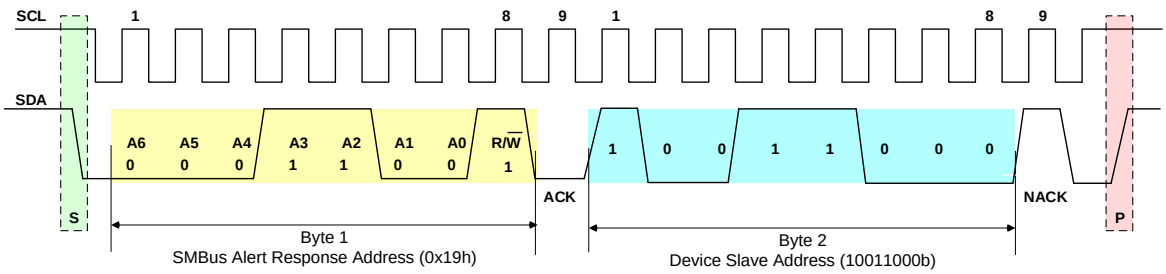

Figure 18. SMBus ALERT Response Diagram

1 Function Descriptions

The chip can sense 1 local channel and 2 remote channels temperature and convert them into digital data by a 12-bit ADC. Also the chip supports programmable high/low-limit temperature settings for all channels independently. If the measured temperature of any temperature channel drops below the low-limit or exceeds high-limit, ALERT pin will be asserted. If the measured temperature of any channel exceeds THERM limit (programmed by user), THERM pin will be asserted. For remote channels' high/low-limit temperature setup registers, there are 2 registers including MSB and LSB respectively. For THERM limit temperature setup registers, there is a hysteresis temperature setup register, which affects all local and remote channels.

1.1 Digital Output of Temperature Data

The temperature measurement data are in the local temperature and remote temperature registers (read only attribution). All local and remote channels' temperatures are stored in 12-bit binary format with the eight most significant bits(MSB) plus four least significant bits(LSB). And all other bits of low byte register are set to zero. These 2-Bytes temperature data can be read at the same time in one reading cycle (2-byte reading operation), 1st Byte is MSB followed by 2nd Byte is LSB, although register address is not adjacent. This can make sure both MSB and LSB byte data are from the same time of A-D conversion. For examples, local temperature data can be obtained from register address 0x00 in 2-byte reading operation.

If set bit2(RANGE) of configuration 1 register as '0',the temperature data register of local and remote channels range is from 0x0000 to 0x7FF0, which means the expressed temperature range is from 0℃ to 127.9375℃. If setting bit2(RANGE) of configuration 1 as '1', the temperature range is extended from -64℃ to 191℃. And the detail data format is shown as below tables.

Table 1. Sensor Temperature in 12-bit Digital Data (RANGE bit = 0, default)

Measured Temperature (°C)	Register Temperature (°C)	12-bit Digital Output (HEX)	8-bit Digital Output (BIN)(MSB)	4-bit Digital Output (BIN)(LSB)
+150.000	+127.9375	0x7FF0	0 1 1 1 ,1 1 1 1	1 1 1 1 ,0 0 0 0
+127.9375	+127.9375	0x7FF0	0 1 1 1 ,1 1 1 1	1 1 1 1 ,0 0 0 0
+100.500	+100.500	0x6480	0 1 1 0, 0 1 0 0	1 0 0 0 ,0 0 0 0
+25.750	+25.750	0x19C0	0 0 0 1, 1 0 0 1	1 1 0 0 ,0 0 0 0
0.000	0.000	0x0000	0 0 0 0, 0 0 0 0	0 0 0 0 ,0 0 0 0
-25.750	0.000	0x0000	0 0 0 0, 0 0 0 0	0 0 0 0 ,0 0 0 0
-40.000	0.000	0x0000	0 0 0 0, 0 0 0 0	0 0 0 0 ,0 0 0 0

Table 2. Sensor Temperature in 12-bit Digital Data (RANGE bit = 1)

*Measured Temperature (°C)	Register Temperature (°C)	12-bit Digital Output (HEX)	8-bit Digital Output (BIN)(MSB)	4-bit Digital Output (BIN)(LSB)
+191.9375	+255.9375	0xFFF0	1 1 1 1 ,1 1 1 1	1 1 1 1 ,0 0 0 0
+150.000	+214.000	0xD600	1 1 0 1 ,0 1 1 0	0 0 0 0 ,0 0 0 0
+127.9375	+191.9375	0xBFF0	1 0 1 1 ,1 1 1 1	1 1 1 1 ,0 0 0 0
+100.500	+164.500	0xA480	1 0 1 0, 0 1 0 0	1 0 0 0 ,0 0 0 0
+25.750	+89.750	0x59C0	0 1 0 1, 1 0 0 1	1 1 0 0 ,0 0 0 0
0.000	+64.000	0x4000	0 1 0 0, 0 0 0 0	0 0 0 0 ,0 0 0 0
-25.750	+38.250	0x2640	0 0 1 0, 0 1 1 0	0 1 0 0 ,0 0 0 0
-40.000	+24.000	0x1800	0 0 0 1, 1 0 0 0	0 0 0 0 ,0 0 0 0
-64.000	0.000	0x0000	0 0 0 0, 0 0 0 0	0 0 0 0 ,0 0 0 0

* Measured Temperature (°C) = Register Temperature (°C) – 64 (°C)

1.2 Higher than 128℃

When measured temperature of local and/or remote channels is equal or higher than 128℃, set bit2(RANGE) of configuration 1 register as '1' will extend the temperature range from 0℃ to 127℃ into -64℃ to 191℃.The difference is bit7 of temperature MSB data is used as 128℃ in extended format. Once RANGE bit is set as '1', user has to note that:

1). the actual measured temperature is calculated by register temperature minus 64℃;

2). It has to keep high/low-limit alert temperature registers as the same format as temperature data manually;

3). although the expression temperature is -64℃ to 191℃ in extended mode, for the sensor chip, it is better to keep within -40℃ to 125℃, for external thermal diodes or transistors, it is better to keep within -50℃ to 150℃.

Table 3. Temperature Range Setup

Bit2 (RANGE)	Temperature Range (°C)	Register Range(HEX, MSB only)
0 (default)	0 to 127	0x00 to 0x7F
1	-64 to 191	0x00 to 0xFF

1.3 Operating Mode, Active and Standby

The chip has 2 operating modes:

1). Active (default, by setting STB bit, bit6 of Configuration 1 Register as ‘0’): In this mode, the ADC is doing conversion on all temperature sensor channels at the programmed conversion rate. The temperature data is updated and limitation is checked at the end of every conversion cycle. In this mode, writing to the one-shot register (Add=0x0F), the chip has no response.

2). Standby(by setting STB bit, bit6 of Configuration 1 Register as ‘1’): In this mode, most circuit blocks are powered down to reduce operation current. The SMBus is active and the chip will return requested data. Writing any data to the one-shot register(Add=0x0F) will do one-time temperature conversion for all enable channels (setup by Configuration 2 Register[5:3] bits). Once all enabled sensor channels are updated, the chip will return to standby mode again until STB bit is set as '0'.

1.4 Register Map (Note 4)

The definition of all registers is shown as below table.

Table 4. CT7432 Register Map

Address	Register Name	Attribution	Default Data	BIT							
				7	6	5	4	3	2	1	0
0x00	LT_MSB	R/O	0x00	LT11	LT10	LT9	LT8	LT7	LT6	LT5	LT4
0x01	RT1_MSB	R/O	0x00	R1T11	R1T10	R1T9	R1T8	R1T7	R1T6	R1T5	R1T4
0x02	STATUS	R/O	0x80	BUSY	0	0	HIGH	LOW	OPEN	THERM	0
0x03	Configuration 1	R/W	0x00	ALTMASK	STB	AL/TH	0	0	RANGE	0	0
0x04	Conv_Rate	R/W	0x07	0	0	0	0	Conv_rate[3:0]			
0x05	LT_HAT_MSB	R/W	0x55	LT_HAT[11:4]							
0x06	LT_LAT_MSB	R/W	0x00	LT_LAT[11:4]							
0x07	RT1_HAT_MSB	R/W	0x55	RT1_HAT[11:4]							
0x08	RT1_LAT_MSB	R/W	0x00	RT1_LAT[11:4]							
0x09	Configuration 1	R/W	0x00	ALTMASK	STB	AL/TH	0	0	RANGE	0	0
0x0A	Conv_Rate	R/W	0x07	0	0	0	0	Conv_Rate[3:0]			
0x0B	LT_HAT_MSB	R/W	0x55	LT_HAT[11:4]							
0x0C	LT_LAT_MSB	R/W	0x00	LT_LAT[11:4]							
0x0D	RT1_HAT_MSB	R/W	0x55	RT1_HAT[11:4]							
0x0E	RT1_LAT_MSB	R/W	0x00	RT1_LAT[11:4]							
0x0F	One_Shot_Con	W/O	N/A	It is a write only register; write any data into this register will trig one time temperature measurement for all enabled channels. It is available only in shutdown mode.							
0x10	RT1_LSB	R/O	0x00	R1T3	R1T2	R1T1	R1T0	RSV			
0x13	RT1_HAT_LSB	R/W	0x00	RT1_HAT[3:0]				RSV			
0x14	RT1_LAT_LSB	R/W	0x00	RT1_LAT[3:0]				RSV			
0x15	RT2_HAT_MSB	R/W	0x55	RT2_HAT[11:4]							
0x16	RT2_LAT_MSB	R/W	0x00	RT2_LAT[11:4]							
0x17	RT2_HAT_LSB	R/W	0x00	RT2_HAT[3:0]							
0x18	RT2_LAT_LSB	R/W	0x00	RT2_LAT[3:0]							
0x19	RT1_THERM_LIMIT	R/W	0x55	RT1_THERM[7:0]							
0x1A	RT2_THERM_LIMIT	R/W	0x55	RT2_THERM[7:0]							
0x1B	RDO_STATUS	R/O	0x00	RSV					R2DO	R1DO	0
0x1F	CH_Mask	R/W	0x00	RSV					R2MSK	R1MSK	LMSK
0x20	LT_THERM_LIMIT	R/W	0x55	LT_THERM[7:0]							
0x21	THERM_HYS	R/W	0x0A	THERM_HYS[7:0]							
0x22	ALT_THM_CON	R/W	0x70	0	THM_CON[2:0]			ALT_CON[2:0]			0
0x23	RT2_MSB	R/O	0x00	R2T11	R2T10	R2T9	R2T8	R2T7	R2T6	R2T5	R2T4
0x24	RT2_LSB	R/O	0x00	R2T3	R2T2	R2T1	R2T0	RSV			
0x25	R1_beta_compensation	R/W	0x0F	RSV				R1BC3	R1BC2	R1BC1	R1BC0
0x26	R2_beta_compensation	R/W	0x0F	RSV				R2BC3	R2BC2	R2BC1	R2BC0
0x27	n-Factor Correction_R1	R/W	0x00	R1NC[7:0]							
0x28	n-Factor Correction_R2	R/W	0x00	R2NC[7:0]							
0x29	LT_LSB	R/O	0x00	LT3	LT2	LT1	LT0	0	0	0	0
0x35	H_LIMIT_Status	R/O	0x00	0	0	0	0	0	R2H	R1H	LH
0x36	L_LIMIT_Status	R/O	0x00	0	0	0	0	0	R2L	R1L	LL
0x37	THERM_Status	R/O	0x00	0	0	0	0	0	R2TM	R1TM	LTM
0x3D	LT_HAT_LSB	R/W	0x00	LT_HAT[3:0]				0	0	0	0
0x3E	LT_LAT_LSB	R/W	0x00	LT_LAT[3:0]				0	0	0	0
0x3F	Configuration 2	R/W	0x3C	0	0	R2EN	R1EN	LEN	SRCEN	0	0
0xFC	Soft_Reset	W/O	0x00	x	x	x	x	x	x	x	x
0xFD	Device_ID	R/O	0x32	0x32							
0xFE	Manufacturer_ID	R/O	0x59	0x59							

Note 4:R/W -- Readable/Writable; R/O -- read only; W/O -- write only; X -- do not care whatever '0' or '1'. RSV -- Reserved; N/A -- Not applicable.

Table 5. CT7432A Register Map

Address	Register Name	Attribution	Default Data	BIT							
				7	6	5	4	3	2	1	0
0x00	LT_MSB	R/O	0x00	LT11	LT10	LT9	LT8	LT7	LT6	LT5	LT4
0x01	RT1_MSB	R/O	0x00	R1T11	R1T10	R1T9	R1T8	R1T7	R1T6	R1T5	R1T4
0x02	STATUS	R/O	0x80	BUSY	0	0	HIGH	LOW	OPEN	THERM	0
0x03	Configuration 1	R/W	0x00	ALTMASK	STB	AL/TH	0	0	RANGE	0	0
0x04	Conv_Rate	R/W	0x07	0	0	0	0	Conv_rate[3:0]			
0x05	LT_HAT_MSB	R/W	0x55	LT_HAT[11:4]							
0x06	LT_LAT_MSB	R/W	0x00	LT_LAT[11:4]							
0x07	RT1_HAT_MSB	R/W	0x55	RT1_HAT[11:4]							
0x08	RT1_LAT_MSB	R/W	0x00	RT1_LAT[11:4]							
0x09	Configuration 1	R/W	0x00	ALTMASK	STB	AL/TH	0	0	RANGE	0	0
0x0A	Conv_Rate	R/W	0x07	0	0	0	0	Conv_Rate[3:0]			
0x0B	LT_HAT_MSB	R/W	0x55	LT_HAT[11:4]							
0x0C	LT_LAT_MSB	R/W	0x00	LT_LAT[11:4]							
0x0D	RT1_HAT_MSB	R/W	0x55	RT1_HAT[11:4]							
0x0E	RT1_LAT_MSB	R/W	0x00	RT1_LAT[11:4]							
0x0F	One_Shot_Con	W/O	N/A	It is a write only register;write any data into this register will trig one timetemperature measurement for all enabled channels.It is available only in shutdown mode.							
0x10	RT1_LSB	R/O	0x00	R1T3	R1T2	R1T1	R1T0	RSV			
0x13	RT1_HAT_LSB	R/W	0x00	RT1_HAT[3:0]				RSV			
0x14	RT1_LAT_LSB	R/W	0x00	RT1_LAT[3:0]				RSV			
0x15	RT2_HAT_MSB	R/W	0x55	RT2_HAT[11:4]							
0x16	RT2_LAT_MSB	R/W	0x00	RT2_LAT[11:4]							
0x17	RT2_HAT_LSB	R/W	0x00	RT2_HAT[3:0]							
0x18	RT2_LAT_LSB	R/W	0x00	RT2_LAT[3:0]							
0x19	RT1_THERM_LIMIT	R/W	0x55	RT1_THERM[7:0]							
0x1A	RT2_THERM_LIMIT	R/W	0x55	RT2_THERM[7:0]							
0x1B	RDO_STATUS	R/O	0x00	RSV					R2DO	R1DO	0
0x1F	CH_Mask	R/W	0x00	RSV					R2MSK	R1MSK	LMSK
0x20	LT_THERM_LIMIT	R/W	0x55	LT_THERM[7:0], (default,85^{oC})							
0x21	THERM_HYS	R/W	0x0A	THERM_HYS[7:0] (default,10^{oC})							
0x22	ALT_THM_CON	R/W	0x70	0	THM_CON[2:0]			ALT_CON[2:0]			0
0x23	RT2_MSB	R/O	0x00	R2T11	R2T10	R2T9	R2T8	R2T7	R2T6	R2T5	R2T4
0x24	RT2_LSB	R/O	0x00	R2T3	R2T2	R2T1	R2T0	RSV			
0x25	R1_beta_compensation	R/W	0x0F	RSV				R1BC3	R1BC2	R1BC1	R1BC0
0x26	R2_beta_compensation	R/W	0x0F	RSV				R2BC3	R2BC2	R2BC1	R2BC0
0x27	n-Factor Correction_R1	R/W	0x00	R1NC[7:0]							
0x28	n-Factor Correction_R2	R/W	0x00	R2NC[7:0]							
0x29	LT_LSB	R/O	0x00	LT3	LT2	LT1	LT0	0	0	0	0
0x35	H_LIMIT_Status	R/O	0x00	0	0	0	0	0	R2H	R1H	LH
0x36	L_LIMIT_Status	R/O	0x00	0	0	0	0	0	R2L	R1L	LL
0x37	THERM_Status	R/O	0x00	0	0	0	0	0	R2TM	R1TM	LTM
0x3D	LT_HAT_LSB	R/W	0x00	LT_HAT[3:0]				0	0	0	0
0x3E	LT_LAT_LSB	R/W	0x00	LT_LAT[3:0]				0	0	0	0
0x3F	Configuration 2	R/W	0x3C	0	0	R2EN	R1EN	LEN	SRCEN	0	0
0xFC	Soft_Reset	W/O	0x00	x	x	x	x	x	x	x	x
0xFD	Device_ID	R/O	0x13	0x13							
0xFE	Manufacturer_ID	R/O	0x59	0x59							

Note 4: R/W -- Readable/Writable; R/O -- read only; W/O -- write only; X -- do not care whatever '0' or '1'. RSV -- Reserved; N/A -- Not applicable.

1.5 Register Description

1.5.1 Temperature Data, including 1 Local Channel and 2 Remote Channels

Register Address: 0x00, 0x01, 0x10, 0x23, 0x24, 0x29

Register Attribution: Read only

Default Data: 0x00 in Standby mode after POR

For each channel, temperature in Celsius degree is formed by 2-bytes data, MSB plus LSB, which expressed in 12-bit binary format. The definition of each bit is shown as below table. The resolution is 0.0625°C, and the expressed range is from 0°C to +127.9375°C when range bit is '0' or -64°C to +191.9375°C when range bit is '1'. However the sensor chip worked temperature range only from -40°C to 125°C, the range can be extended -50°C to 150°C or above for remote channels. The last 4 bits of LSB byte are always '0' after reading.

Channel	MSB Data (Register Address)	LSB Data (Register Address)
Local	0x00	0x29
Remote 1	0x01	0x10
Remote 2	0x23	0x24

	MSB								LSB							
BIT	7	6	5	4	3	2	1	0	7	6	5	4	3	2	1	0
Number	T11	2^6	2^5	2^4	2^3	2^2	2^1	2^0	2^{-1}	2^{-2}	2^{-3}	2^{-4}	0	0	0	0
Degree(°C)	0/128[Note5]	64	32	16	8	4	2	1	0.5	0.25	0.125	0.0625	0	0	0	0
Default	0	0	0	0	0	0	0	0	0	0	0	0	0	0	0	0

Note 5: RANGE bit = 0, bit7 is used as 0 always; RANGE bit = 1, bit7 is used as 128℃;

1.5.2 STATUS Register, to indicate the chip Alert, Therm and remote diodes open Status

Register Address: 0x02, 0x1B, 0x35, 0x36, 0x37

Register Attribution: Read Only

Default Data: 0x80 for 0x02 register, 0x00 for all other registers after POR

STATUS(Address 0x02)

BIT	Name	Description
7	BUSY	1 -- means ADC is busy for temperature converting.
6:5	0	No definition, always '0' after reading.
4	HIGH	AL/TH[NOTE6] = 0, pin8 is used as ALERT feature 1 -- means temperature of any channel(local or remote channels) is higher than that of programmed value in relative high-limit registers (local or remote channels); this bit will be kept as '1' even temperature of all channels drops below relative high-limit value. This bit is reset as '0' only after reading (high-limit) status register or resetting the chip. AL/TH = 1, pin8 is used as 2nd THERM feature 1 -- means temperature of any channel(local or remote channels) is higher than that of programmed value in relative high-limit registers (local or remote channels); and this pin will be reset as '0' once temperature of all channels drops below temperature minus hysteresis.
3	LOW	Whatever AL\TH[NOTE6]bit = 0 or 1 1 -- means temperature of any channel(local or remote channels) is lower than that of programmed value in relative low-limit registers (local or remote channels); this bit will be kept as '1' even temperature of all channels exceeds relative low-limit value. This bit is reset as '0' only after reading (low-limit) status register or resetting the chip.
2	OPEN	1 -- means remote diode of any remote channel is open/disconnected. This bit will be kept as '1' even remote diode is connected correctly. This bit is reset as '0' only after reading (remote diode) status register or resetting the chip.
1	THERM	1 -- means temperature of any channel(local or remote channels) exceeds that of programmed value in relative THERM-limit registers (local or remote channel); this bit will be reset as '0'once temperature of all channels drops below relative THERM-limit value minus hysteresis temperature.
0	0	No definition, always '0' after reading.

Note 6: AL/TH bit is bit5 of configuration 1 register (Address, 0x03);

RDO_STATUS(Address 0x1B), to indicate remote diode open status. If any bit of this register is set as '1', bit2 (OPEN bit) of STATUS register (Address 0x02) will be set as '1'.

BIT	Name	Description
7:3	0	No definition, always '0' after reading.
2	R2DO	1 -- means remote channel 2 diode is open/disconnected. This bit will be updated only after temperature conversion for remote channel 2. This bit is '0' if remote channel 2 diode is connected correctly.
1	R1DO	1 -- means remote channel 1 diode is open/disconnected. This bit will be updated only after temperature conversion for remote channel 1. This bit is '0' if remote channel 1 diode is connected correctly.
0	0	No definition, always '0' after reading.

H_LIMIT_STATUS(Address 0x35), to indicate high-limit status. If any bit of this register is set as '1', bit4 (HIGH) of STATUS register (Address 0x02) will be set as '1'.

BIT	Name	Description
7:3	0	No definition, always '0' after reading.
2	R2H	1 -- means temperature of remote channel 2 exceeds that of setup value in RT2_HAT register formed by 2 bytes, MSB byte (address 0x15) and LSB byte (address 0x17). This bit will be updated only after temperature conversion for remote channel 2. This bit is '0' if temperature of remote channel 2 drops below setup value in RT2_HAT register.
1	R1H	1 -- means temperature of remote channel 1 exceeds that of setup value in RT1_HAT register formed by 2 bytes, MSB byte (address 0x0D) and LSB byte (address 0x13). This bit will be updated only after temperature conversion for remote channel 1. This bit is '0' if temperature of remote channel 1 drops below setup value in RT1_HAT register.
0	LH	1 -- means temperature of local channel exceeds that of setup value in LT_HAT register formed by 2 bytes, MSB byte (address 0x0B) and LSB byte (address 0x3D). This bit will be updated only after temperature conversion for local channel. This bit is '0' if temperature of local channel drops below setup value in LT_HAT register.

L_LIMIT_STATUS(Address 0x36), to indicate low-limit status. If any bit of this register is set as '1', bit3 (LOW) of STATUS register (Address 0x02) will be set as '1'.

BIT	Name	Description
7:3	0	No definition, always '0' after reading.
2	R2L	1 -- means temperature of remote channel 2 drops below that of setup value in RT2_LAT register formed by 2 bytes, MSB byte (address 0x16) and LSB byte (address 0x18). This bit will be updated only after temperature conversion for remote channel 2. This bit is '0' if temperature of remote channel 2 is higher setup value in RT2_LAT register.
1	R1L	1 -- means temperature of remote channel 1 drops below that of setup value in RT1_LAT register formed by 2 bytes, MSB byte (address 0x0E) and LSB byte (address 0x14). This bit will be updated only after temperature conversion for remote channel 2. This bit is '0' if temperature of remote channel 1 is higher setup value in RT1_LAT register.
0	LL	1 -- means temperature of local channel drops below that of setup value in LT_LAT register formed by 2 bytes, MSB byte (address 0x0C) and LSB byte (address 0x3E). This bit will be updated only after temperature conversion for remote channel 2. This bit is '0' if temperature of remote channel 1 is higher setup value in LT_LAT register.

THERM_STATUS(Address 0x37), to indicate THERM-limit status. If any bit of this register is set as '1', bit1 (THERM) of STATUS register (Address 0x02) will be set as '1'.

BIT	Name	Description
7:3	0	No definition, always '0' after reading.
2	R2TM	1 -- means temperature of remote channel 2 exceeds that of setup value in RT2_THERM_LIMIT register (address 0x1A). This bit will be updated only after temperature conversion for remote channel 2. This bit is '0' if temperature of remote channel 2 drops below setup value in RT2_THERM_LIMIT register minus hysteresis temperature (address 0x21).
1	R1TM	1 -- means temperature of remote channel 1 exceeds that of setup value in RT1_THERM_LIMIT register (address 0x19). This bit will be updated only after temperature conversion for remote channel 1. This bit is '0' if temperature of remote channel 1 drops below setup value in RT1_THERM_LIMIT register minus hysteresis temperature (Address 0x21).
0	LTM	1 -- means temperature of local channel exceeds that of setup value in LT_THERM_LIMIT register (address 0x20). This bit will be updated only after temperature conversion for local channel. This bit is

		'0' if temperature of local channel drops below setup value in LT_THERM_LIMIT register minus hysteresis temperature (Address 0x21).

1.5.3 Configuration Registers, including Configuration 1 and 2

Register Address& Attribution: 0x03 (Read/Write) and 0x09 (Read/Write) for Configuration 1, 0x3F for Configuration 2

Default Data: 0x00 for Configuration 1, 0x3C for Configuration 2

Configuration 1

BIT	7	6	5	4	3	2	1	0
Name	ALTMSK	STB	AL/TH	0	0	RANGE	0	0
Default	0	0	0	0	0	0	0	0

BIT	Name	Description
7	ALTMSK	0 --disable to mask all ALERT interrupt function; 1 --enable to mask all ALERT interrupt function; Note, if AL/TH = 1, this bit has no effect for ALERT pin.
6	STB	0 -- the chip is active and working normally; 1 -- the chip is in standby mode.
5	AL/TH	0 --configure PIN8 as ALERT function; 1 --configure PIN8 as THERM2 function;
4:3	0	No definition, always '0' after reading.
2	RANGE	0 -- temperature expression range is 0^{oC} to 127^{oC}; 1–temperatureexpression range is -64^{oC} to 191^{oC}.
1:0	0	No definition, always '0' after reading.

Configuration 2

BIT	7	6	5	4	3	2	1	0
Name	0	0	R2EN	R1EN	LEN	SRCEN	0	0
Default	0	0	1	1	1	1	0	0

BIT	Name	Description
7:6	0	No definition, always '0' after reading.
5	R2EN	0 –to disable remote channel 2; 1 -- to enable remote channel 2.
4	R1EN	0 –to disable remote channel 1; 1 -- to enable remote channel 1.
3	LEN	0 –to disable local channel; 1 -- to enable local channel.
2	SRCEN	0 –to disable serial resistance cancellation feature; 1 -- to enable serial resistance cancellation feature.
1:0	0	No definition, always '0' after reading.

1.5.4 Conv_Rate, Conversion Rate Setup Register of ADC

Register Address& Attribution: 0x04(Read/Write) and 0x0A(Read/Write)

Default Data: 0x07

BIT	7	6	5	4	3	2	1	0
Name	0	0	0	0	Conv_Rate[3:0]			
Default	0	0	0	0	0	1	1	1

BIT	NAME	Description
7:4	0	No definition, always '0' after reading.

3:0	Conv_Rate[3:0]	Conversion Rate Selection, Code Conv/s Conversion Time (s) 0000 0.0625 16 0001 0.125 8 0010 0.25 4 0011 0.5 2 0100 1.0 1 0101 2.0 0.5 0110 4.0 0.25 0111 8.0 0.125(default)NOTE7 1000 8.0 0.125 1xxx 8.0 0.125

Note 7: 8.0 Cons/s Only valid for enabling one remote channel, If all three channels are enabled, fastest conversion rate is 4.0 Cons/s

1.5.5 ALT_THM_CON, ALERT and THERM Consecutive Setup

Register Address: 0x22

Register Attribution: Read/Write

Default Data: 0x70.

This register is used to setup the number of consecutive times to trig ALERT or THERM conditions. The default is 0x00, which means 1 time trigger condition happens will cause ALERT or THERM pin to be active.

BIT	7	6	5	4	3	2	1	0
Name	EN	TM_CON2	TM_CON1	TM_CON0	ALT_CON2	ALT_CON1	ALT_CON0	0
Default	0	1	1	1	0	0	0	0

BIT	NAME	Description
7	EN NOTE8	0- Timeout Disable 1- Timeout Enable
6:4	THM_CON[2:0]	To setup the number of consecutive times to trig THERM condition, 000 -- 1 001 -- 2 011 -- 3 111 – 4
3:1	ALT_CON[2:0]	To setup the number of consecutive times to trig ALERT condition, 000 -- 1 001 -- 2 011 -- 3 111 -- 4
0	0	No definition, always ‘0’ after reading.

Note 8: This bit is only valid for CT7432A. For CT7432, the timeout is always enable although this bit is ‘0’ after reading.

1.5.6 One_Shot_Con, used for One Time Conversion

Register Address: 0x0F

Register Attribution: Write only

This register is used to perform one shot temperature measurement. When the chip is in standby mode, writing any data (0x00 to 0xFF) into this register will activate ADC to update all enabled channels measurement. In active mode, writing data into this register has no any effect to the chip.The attribution of this register is write-only. Data written to this register is not stored and the data read from this register is always 0x00.

1.5.7 ALERT LIMIT, including Local and Remote Channels high/low-limit

For each channel, there are high-limit and low-limit threshold temperature. And there are 2-bytes called MSB and LSB to form one threshold temperature. So totally there are 12 bytes to setup in different register address. The chip supports 2-byte reading operation, which can obtain high/low threshold temperature in one reading cycle. It is similar as temperature reading. Also the chip supports 2-byte writing operation.

For examples, to setup local channel high-limit threshold temperature as 100.5°C, just writing 2-bytes data 0x64, 0x80 into register address, 0x0B in 2-byte writing operation.

S	Slave Address	W	A	Register Add [0x0B]	A	High-limit [MSB, 0x64]	A	High-limit [LSB, 0x80]	A	P

For examples, to read remote channel 1 low-limit threshold temperature, just reading 2-bytes data from register address, 0x08 in 2-byte reading operation.

S	Slave Address	W	A	Register Add [0x08]	A	Sr	Slave Address	R	A	
	low-limit [MSB]	A	low-limit [LSB]	N	P					

All channels high/low-limit threshold registers are listed as below table.

Channel	High-limit Register Address		Low-limit Register Address	
	MSB	LSB	MSB	LSB
Local	0x05: R/W; 0x0B: R/W Default: 0x55	0x3D: R/W Default: 0x00	0x06: R/W; 0x0C: R/W Default: 0x00	0x3E: R/W Default: 0x00
	Default: 85°C (RANGE = 0), 21°C (RANGE = 1)		Default: 0°C (RANGE = 0), -64°C (RANGE = 1)	
Remote1	0x07: R/W; 0x0D: R/W Default: 0x55	0x13: R/W Default: 0x00	0x08: R/W; 0x0E: R/W Default: 0x00	0x14: R/W Default: 0x00
	Default: 85°C (RANGE = 0), 21°C (RANGE = 1)		Default: 0°C (RANGE = 0), -64°C (RANGE = 1)	
Remote 2	0x15: R/W Default: 0x55	0x17: R/W Default: 0x00	0x16: R/W Default: 0x00	0x18: R/W Default: 0x00
	Default: 85°C (RANGE = 0), 21°C (RANGE = 1)		Default: 0°C (RANGE = 0), -64°C (RANGE = 1)	

It is important to note that, the high/low-limit format for each channel is always the same as that of temperature obtained from register 0x00, 0x01 and 0x23. For example, in default the high-limit register of local channel is 0x55, which stands for 85°C.However if user changes RANGE bit as '1', this limit register data will not be changed automatically. The resister data still is 0x55, which stands for 85°C – 64°C = 21°C. If pin8 of the chip is used as 2nd THERM pin, then the values stored in high-limit registers of each channel are taken as relative threshold temperature for THERM2.

1.5.8 THERM LIMIT, including Local and Remote Channels THERM Limit

There are 3 registers used to setup THERM limit value for local (Address 0x20), remote 1 (address 0x19) and remote 2 (address 0x1A) channels. There is only 1-byte for each THERM limit register, with 1°C resolution. Also the format is always the same as that of temperature. For example, the default THERM-limit data for local channel is 0x55, which stands for 85°C if RANGE bit is '0', and stands for 21°C if RANGE bit is '1'.

Channel	THERM-limit Register Address	THERM Hysteresis Register Address
Local	0x20: R/W, Default 0x55 85°C (RANGE = 0), 21°C (RANGE = 1)	0x21: R/W, Default 0x0A 10°C (RANGE = 0 or RANGE = 1)
Remote 1	0x19: R/W, Default 0x55 85°C (RANGE = 0), 21°C (RANGE = 1)	0x21: R/W, Default 0x0A 10°C (RANGE = 0 or RANGE = 1)
Remote 2	0x1A: R/W, Default 0x55 85°C (RANGE = 0), 21°C (RANGE = 1)	0x21: R/W, Default 0x0A 10°C (RANGE = 0 or RANGE = 1)

1.5.9 THERM_HYS, THERM Limit Hysteresis Temperature

Register Address: 0x21

Register Attribution: Read/Write

Default Data: 0x0A, stands for 10℃ whatever RANGE bit is 0 or 1, the range is 0℃ to 255℃ with 1℃ resolution.

It is note that the setup temperature in this register should be less than that of high-limit or THERM-limit of any channel (local or remote), or the logic will conflict and THERM trigger will not happen.

Temperature (°C)	Register Value in HEX	Register Value in BIN
+255	0xFF	1111 ,1111
+200	0xC8	1100 ,1000
+150	0x96	1001 ,0110
+127	0x7F	0111 ,1111
+10	0x0A	0000 ,1010
+1	0x01	0000 ,0001
0	0x00	0000 ,0000

1.5.10 Beta Compensation, for Remote Channel 1 and 2

Register Address: 0x25 for remote channel 1and 0x26 for remote channel 2

Register Attribution: Read/Write

Default Data: 0x08 for both registers.

This register is used to compensate temperature error caused by lower beta or beta variation of PNP transistor especially parasitic substrate transistor inside CPU, GPU, FPGA or SoC chip as remote diode. Set bit3 as ‘1’ will select automatically beta range; Set bit3 as ‘0’ will select manually beta range.

Channel	Address	Default Data, Bits
Remote 1	0x25	0x08bit[3:0]
Remote 2	0x26	0x08bit[3:0]

Item	BC[3:0]	Description
1	0000	Manually setup beta range 1, 0.08<β < 0.50
2	0001	Manually setup beta range 2, 0.15<β <1.0
3	0010	Manually setup beta range 3, 0.20<β <2.0
4	0011	Manually setup beta range 4, 0.30 <β <2
5	0100	Manually setup beta range 5, 0.60 <β < 50
6	0101	Manually setup beta range 6, 1.2<β <100
7	0110	Manually setup beta range 7, 2.5<β <150
8	0111	Disable beta compensation
9	1000	Automatically setup beta range 1, 0.08<β < 0.20
10	1001	Automatically setup beta range 2, 0.15<β < 0.30
11	1010	Automatically setup beta range 3, 0.20<β < 0.40
12	1011	Automatically setup beta range 4, 0.30<β < 0.70
13	1100	Automatically setup beta range 5, 0.60<β < 1.50
14	1101	Automatically setup beta range 6, 1.30 <β <8.0
15	1110	Automatically setup beta range 7, 6.00 <β <30
16	1111	Automatically setup beta range 8, 25.0 <β < +∞

1.5.11 N-Factor_Correction, for Remote Channel 1 and 2

Register Address: 0x27, 0x28

Register Attribution: Read/Write

Default Data: 0x00

This register is used to correct temperature error caused by non-ideality factor from remote diodes by setting proper n-factor value. User can change the slope of remote channels over full temperature range by selecting a different n-factor value. This feature can be used to fit different remote PN junction. The register default value is 0x00 after POR, and n-factor is 1.008.

Hex (Register)	N_{DEC}	Binary	n_{NEW}
0x7F	127	0111 1111	1.7479769
0x0A	10	0000 1010	1.0427586
0x08	8	0000 1000	1.0356164
0x06	6	0000 0110	1.0285714
0x04	4	0000 0100	1.0216216
0x02	2	0000 0010	1.0147651
0x01	1	0000 0001	1.0113712
0x00	0	0000 0000	1.008 (default)
0xFF	-1	1111 1111	1.0046512
0xFE	-2	1111 1110	1.0013245
0xFC	-4	1111 1100	0.9947368
0xFA	-6	1111 1010	0.9882353
0xF8	-8	1111 1000	0.9818182
0xF6	-10	1111 0110	0.9754839
0x80	-128	1000 0000	0.7065421

above table, the column 'Hex' is the data to be written into n-Factor_Correction register, the related n-factor is shown in column 'n_{NEW}'. For example, if writing data 0x0A into Register address 0x27 (remote channel 1) and/or 0x28 (remote channel 2), then n-factor will be changed into 1.0427586 from default 1.008. The relationship between register data and n_{NEW} can be expressed by below equation.

$$n_{NEW} = \frac{1.008 \times 300}{300 - N_{DEC}}$$

n_{NEW}, final n value after writing new data into register.

N_{DEC}, Register data expressed in Decimal, which is in two's complement format.

1.5.12 CH_Mask, Mask Setup individually for each channel

Register Address: 0x1F

Register Attribution: Read / Write

Default Data: 0x00 after POR

BIT	Name	Description
7:3	RSV	Reserved bits, always 0 after reading.
2	R2_MSK	0 -- enable remote channel 2 ALERT interrupt function; 1 -- mask remote channel 2 ALERT interrupt function; Note, if bit7 (ALTMSK) of configuration 1 is 1, this bit has no any effect to chip whatever'0' or '1'.
1	R1_MSK	0 -- enable remote channel 1 ALERT interrupt function; 1 -- mask remote channel 1 ALERT interrupt function; Note, if bit7 (ALTMSK) of configuration 1 is 1, this bit has no any effect to chip whatever '0' or '1'.
0	L_MSK	No de0 -- enable remote channel 2 ALERT interrupt function; 1 -- mask remote channel 2 ALERT interrupt function; Note, if bit7 (ALTMSK) of configuration 1 is 1, this bit has no any effect to chip whatever '0' or '1'.

1.5.13 Device_ID

Register Address: 0xFD

Register Attribution: Read Only

Default Data: CT7432 is 0x32 ,CT7432A is 0x13

1.5.14 Manufacturer_ID

Register Address: 0xFE

Register Attribution: Read Only

Default Data: 0x59

1.6 SMBus Digital Interface

1.6.1 Slave Address

For CT7432A, the SMBus or I^2C slave address of this device can be setup by user via connecting different pull-up resistor for THERM pin (pin7).It is important to note that the voltage connecting the pull-up resistor, should be same with VCC of the chip. Also the chip supports different slave address after production, distinguished by different suffix A to H. Please contact Sensylink sales if user wants other address device.

A6	A5	A4	1	A2	A1	A0	R/W

Depends on THERM pin pull-up resistor — depends on part No. suffix (Group 1 to 8)

For examples, THERM pin pull-up resistor is 4.7k, Part No. is CT7432A, the slave address is 0xF8/0xF9 in Hex with write/read operation. The specific I^2C address is shown in the table below:

Item	Part No.	Group	THERM PIN Pull-up Resistor	Slave Address (W/R)
1	CT7432A	Group 1	4.7k (±5%)	0xF8/0xF9
2	CT7432A	Group 1	6.8k (±5%)	0xB8/0xB9
3	CT7432A	Group 1	10k (±5%)	0x98/0x99
4	CT7432A	Group 1	15k (±5%)	0xD8/0xD9
5	CT7432A	Group 1	22k (±5%)	0x38/0x39
6	CT7432A	Group 1	33k (±5%)	0x78/0x79
7	CT7432A-A	Group 2	4.7k (±5%)	0xF0/0xF1
8	CT7432A-A	Group 2	6.8k (±5%)	0xB0/0xB1
9	CT7432A-A	Group 2	10k (±5%)	0x90/0x91
10	CT7432A-A	Group 2	15k (±5%)	0xD0/0xD1
11	CT7432A-A	Group 2	22k (±5%)	0x30/0x31
12	CT7432A-A	Group 2	33k (±5%)	0x70/0x71
13	CT7432A-B	Group 3	4.7k (±5%)	0xF2/0xF3
14	CT7432A-B	Group 3	6.8k (±5%)	0xB2/0xB3
15	CT7432A-B	Group 3	10k (±5%)	0x92/0x93
16	CT7432A-B	Group 3	15k (±5%)	0xD2/0xD3
17	CT7432A-B	Group 3	22k (±5%)	0x32/0x33
18	CT7432A-B	Group 3	33k (±5%)	0x72/0x73
19	CT7432A-C	Group 4	4.7k (±5%)	0xF4/0xF5
20	CT7432A-C	Group 4	6.8k (±5%)	0xB4/0xB5
21	CT7432A-C	Group 4	10k (±5%)	0x94/0x95
22	CT7432A-C	Group 4	15k (±5%)	0xD4/0xD5
23	CT7432A-C	Group 4	22k (±5%)	0x34/0x35
24	CT7432A-C	Group 4	33k (±5%)	0x74/0x75
25	CT7432A-D	Group 5	4.7k (±5%)	0xF6/0xF7
26	CT7432A-D	Group 5	6.8k (±5%)	0xB6/0xB7
27	CT7432A-D	Group 5	10k (±5%)	0x96/0x97
28	CT7432A-D	Group 5	15k (±5%)	0xD6/0xD7
29	CT7432A-D	Group 5	22k (±5%)	0x36/0x37
30	CT7432A-D	Group 5	33k (±5%)	0x76/0x77
31	CT7432A-E	Group 6	4.7k (±5%)	0xFA/0xFB
32	CT7432A-E	Group 6	6.8k (±5%)	0xBA/0xBB
33	CT7432A-E	Group 6	10k (±5%)	0x9A/0x9B

34	CT7432A-E	Group 6	15k (±5%)	0xDA/0xDB
35	CT7432A-E	Group 6	22k (±5%)	0x3A/0x3B
36	CT7432A-E	Group 6	33k (±5%)	0x7A/0x7B
37	CT7432A-F	Group 7	4.7k (±5%)	0xFC/0xFD
38	CT7432A-F	Group 7	6.8k (±5%)	0xBC/0xBD
39	CT7432A-F	Group 7	10k (±5%)	0x9C/0x9D
40	CT7432A-F	Group 7	15k (±5%)	0xDC/0xDD
41	CT7432A-F	Group 7	22k (±5%)	0x3C/0x3D
42	CT7432A-F	Group 7	33k (±5%)	0x7C/0x7D
43	CT7432A-G	Group 8	4.7k (±5%)	0xFE/0xFF
44	CT7432A-G	Group 8	6.8k (±5%)	0xBE/0xBF
45	CT7432A-G	Group 8	10k (±5%)	0x9E/0x9F
46	CT7432A-G	Group 8	15k (±5%)	0xDE/0xDF
47	CT7432A-G	Group 8	22k (±5%)	0x3E/0x3F
48	CT7432A-G	Group 8	33k (±5%)	0x7E/0x7F

For CT7432,the SMBus or I2C slave address of this device is 10011000b (0x98h in HEX) in write mode, and 10011001b (0x99h in HEX) in read mode. If 2 or more of these devices in one SMBus are used, customers have to select thermal sensor with different slave address. Please contact Sensylink sales for more information.

	A6	A5	A4	A3	A2	A1	A0	R/W
Read	1	0	0	1	1	0	0	1
Write	1	0	0	1	1	0	0	0

1.6.2 Timeout

The chip supports SMBus timeout. If the clock is held low for longer than 30ms (Typ.), the chip will reset its SMBus protocal and be ready for a new transmission.

1.6.3 General Call Reset

The chip supports reset via the I^2C/SMBus General Call address 0x00h (0000 0000b). The chip acknowledge the General Call address and respond to the second byte. If the second byte is 0x06h (0000 0110b),the chip will perform software reset. This action will reset all registers to POR state, abort any conversion in progress, and clear the ALERT and THERM pins.

1.6.4 SMBus Protocal

The chip supports four standard SMBus protocals Send Byte, Read Byte, Write Byte and Receive Byte, shown as below tables.

Write Byte

S	Slave Add	R/W	ACK	Reg Add	ACK	Reg Data	ACK	P
	1001100	0	0	XXh	0	XXh	0	

Read Byte

S	Slave Add	R/W	ACK	Reg Add	ACK	S	Slave Add	R/W	ACK	Reg Data	NACK	P
	1001100	0	0	XXh	0		1001100	1	0	XXh	1	

Send Byte

S	Slave Add	R/W	ACK	Reg Add	ACK	P
	1001100	0	0	XXh	0	

Receive Byte

S	Slave Add	R/W	ACK	Reg Data	NACK	P
	1001100	1	0	XXh	1	

Here S means SMBus Start to communication with master, P means communication STOP.

Slave Add, means the chip's SMBus address.

Reg Add, means pointed Register Address.

Reg Data means data to be written into register or read from register.

1.6.5 Compatible with I^2C

The chip is compatible with both SMBus and I^2C. And the major difference between SMBus and I^2C is shown as below. For more information, refer to SMBus specification v2.0 and I^2C specification v2.1.

1). this chip supports I^2C fast mode (400kHz) and standard mode (100kHz), which can cover SMBus maximum frequency 100kHz.

2). For SMBus protocol, the minimum frequency is 10kHz. There is no such limitation for I^2C.

3). For SMBus protocol, slave device will reset if hold clock at '0' longer than 30ms. There is no timeout limitation for I^2C.

4). ARA (Alert Response Address)general call is only valid interrupt in SMBus, not valid in I^2C.

1.7 ALERT Output

ALERT pin is an output pin with open drain structure, and it will be pulled low by internal circuits once ALERT trigger happens in normal working mode. It requires an external pull-up resistor. This pin indicates the measured temperature status. Any of below events happens; ALERT pin will be pulled-low. All below situations are called ALERT trigger.

1). local channel temperature exceeds that of high-limit register data;

2). local channel temperature equals or drops lower than that of low-limit register data;

3). remote 1 channel temperature exceeds that of high-limit register data;

4). remote 1 channel temperature equals or drops lower than that of low-limit register data;

5). remote 2 channel temperature exceeds that of high-limit register data;

6). remote 2 channel temperature equals or drops lower than that of low-limit register data;

7). remote 1 diode is open/disconnect;

8). remote 2 diode is open/disconnect;

It is important to note the high/low-limit data format of all channels' registers, including local, remote 1 and remote 2 should be kept the same as the format of temperature data. There is 2 kinds of formats, depends on RANGE bit is '0' or '1'.

Once ALERT trigger happened, ALERT pin will be asserted and the relevant register bit of STATUS register will be setup too. There are 4 status registers which will affect ALERT pin status, shown as below.

STATUS Register, Add: 0x02

BIT	ALERT	Name	Description
7	No	BUSY	1 -- means ADC is busy for temperature converting
4	Yes	HIGH	1 -- means temperature in any channel is higher than that of setup in relative channel high-limit register, alert active
3	Yes	LOW	1 -- means temperature in any channel is equals to or lower than that of setup in relative channel low-limit register, alert active
2	Yes	OPEN	1 -- means one or both remote channels' diode is open/disconnected, alert active
1	No	THERM	1 -- means THERM alarm active

RDO_STATUS Register, Add: 0x1B

BIT	ALERT	Name	Description
7:3	No	0	No definition.
2	Yes	R2DO	1 -- means remote channel 2 diode is open/disconnected, alert active.
1	Yes	R1DO	1 -- means remote channel 1 diode is open/disconnected, alert active.
0	No	0	No definition.

H_LIMIT_STATUS Register, Add: 0x35

BIT	ALERT	Name	Description
7:3	No	0	No definition.
2	Yes	R2H	1 -- means temperature of remote channel 2 exceeds that of setup value in RT2_HAT register, alert active.
1	Yes	R1H	1 -- means temperature of remote channel 1 exceeds that of setup value in RT1_HAT register, alert active.
0	Yes	LH	1 -- means temperature of local channel exceeds that of setup value in LT_HAT register, alert active.

L_LIMIT_STATUS Register, Add: 0x36

BIT	ALERT	Name	Description
7:3	No	0	No definition, always '0' after reading.
2	Yes	R2L	1 -- means temperature of remote channel 2 equals to or drops below that of setup value in RT2_LAT register, alert active.
1	Yes	R1L	1 -- means temperature of remote channel 1 equals to or drops below that of setup value in RT1_LAT register, alert active.
0	Yes	LL	1 -- means temperature of local channel equals to or drops below that of setup value in LT_LAT register, alert active.

ALERT trigger can be masked for local, remote 1, remote 2 or all 3 channels by setting mask bit of Configuration 1 and CH_Mask registers respectively. If set ALTMSK (bit7 of Configuration 1) as 1, there is no ALERT trigger anymore. If set AL\TH (bit5 of Configuration 1) as 1, PIN8 is configured as THERM2 function, there is no ALERT trigger too. Marked 'YES' in ALERT column of below table will affect ALERT pin status.

Configuration 1 Register, Add: 0x03(R/W) & 0x09 (R/W)

BIT	ALERT	Name	Description
7	Yes	ALTMSK	0 -- disable to mask all ALERT interrupt function; 1 -- enable to mask all ALERT interrupt function;
6	Yes	STB	0 -- the chip is active and working normally; 1 -- the chip is in standby mode.
5	Yes	AL/TH	0 -- configure PIN8 as ALERT function; 1 -- configure PIN8 as THERM2 function;
4:3	No	0	No definition.
2	No	RANGE	0 -- temperature expression range is 0 to 127°C; 1 -- temperature expression range is -64 to 191°C.
1:0	No	0	No definition.

CH_Mask Register, Add: 0x1F (R/W)

BIT	ALERT	Name	Description
7:3	No	RSV	Reserved bits, always 0 after reading.
2	Yes	R2MSK	0 -- enable remote channel 2 ALERT interrupt function; 1 -- mask remote channel 2 ALERT interrupt function;
1	Yes	R1MSK	0 -- enable remote channel 1 ALERT interrupt function; 1 -- mask remote channel 1 ALERT interrupt function;
0	Yes	LMSK	0 -- enable local channel ALERT interrupt function; 1 -- mask local channel ALERT interrupt function;

Also the ALERT consecutive time number (ALT_CON[2:0], bit[3:1] of ALT_THM_CON register) will affect ALERT trigger. Default 1 time happen will cause ALERT trigger. If set consecutive time number as 4 (ALT_CON[2:0]=111b) to prevent temperature changing noise, ALERT trigger only happens after 4 consecutive times trigger.

ALT_THM_CON Register, Add: 0x22

BIT	ALERT	NAME	Description
7	No	0	No definition, always '0' after reading.
6:4	No	THM_CON[2:0]	To setup the number of consecutive times to trigger THERM condition, 000 -- 1 001 -- 2 011 -- 3 111 – 4
3:1	Yes	ALT_CON[2:0]	To setup the number of consecutive times to trigger ALERT condition, 000 -- 1 001 -- 2 011 -- 3 111 -- 4
0	No	0	No definition.

Also Channel enable bits (bit[5:3] of Configuration 2 register, Add: 0x3F) will affect the ALERT trigger, since user can enable or disable each channel individually. All disabled channels will not cause ALERT trigger anymore. Generally ALERT trigger is earlier interrupt to inform MCU than THERM.

ALERT trigger cannot be released automatically even the measurement temperature comes back to temperature between high-limit and low-limit. It is released only by below conditions: Reading STATUS registers or/and SMBus ALERT Response (ARA).

1). the trigger conditions disappear, and Status registers (including STATUS register, RDO Status register, High limit register, Low limit register) are read already by host;

2). the trigger conditions disappear, the host sends the command of Alert Response Address (ARA) via SMBus;

1.7.1 Alert Trigger Release Condition 1

Below Figure19 shows the mechanism of the ALERT pin output .Once ALERT trigger happens, the ALERT pin will be asserted (active low). And ALERT pin can be released by reading STATUS registers (address 0x02) if the trigger conditions disappear.

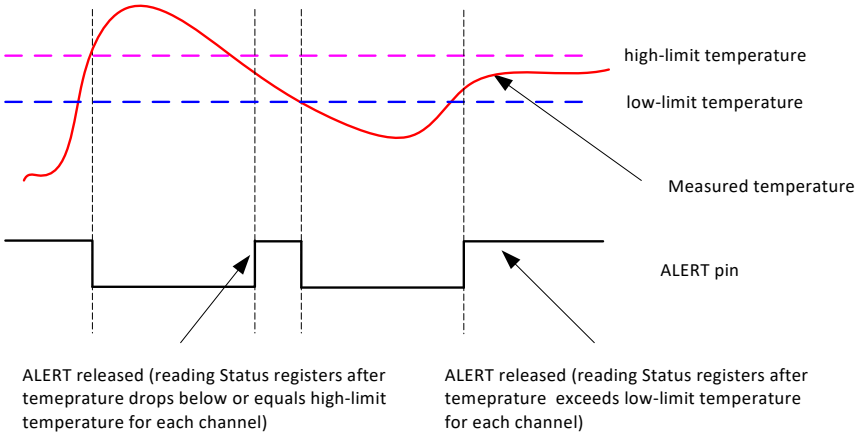

Figure 19. ALERT Pin Output Diagram

1.7.2 Alert Trigger Release Condition 2

It can be used as a processer interrupt or as SMBus ALERT. When the master detects that ALERT pin is asserted, it will send Alert Response Address (ARA) to general address (00011001b). All devices with active interrupts will respond with client address.

Below Figure20 shows the mechanism of the ALERT output SMBus Alert mode. In this mode, the ALERT output is connected to the SMBus alert line which has more than one device connected to it. Through such an implementation, SMBus alert mode can assist the master in resolving which slave device generates an interrupt. When the measured temperature falls outside of the allowed range, the ALERT pin will be pulled low and the corresponding alert flags in Status Register will be set to 1. When SMBus ALERT Response Address (ARA) occurs from master (Alert Response Address is 00011001b), the chip will generate and return its own address to the master. If the temperature never falls inside of the allowed range, the latched ALERT pin can release by setting ALERT mask bit and the latched corresponding alert flags in Status Register can release by reading command for Status Register.

S	Slave Add	R/W	ACK	Reg Add	ACK	P
	0001100	1	0	1001 100xb	1	

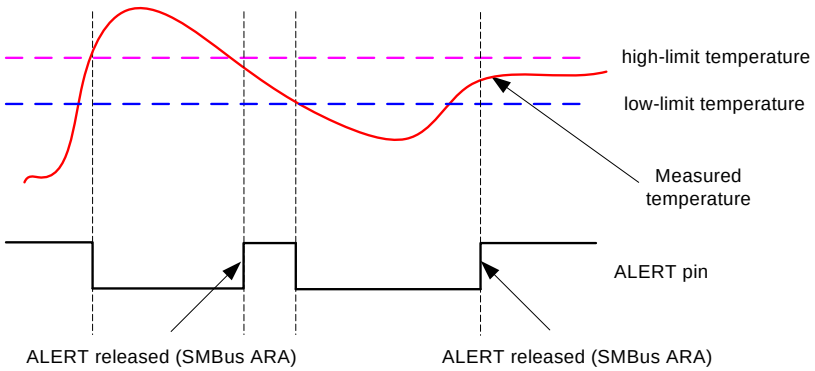

Figure 20. ALERT Pin in SMBus ARA

1.8 THERM Output

THERM pin is also an active low output with open drain. The THERM is asserted and pulled low when any of the measured temperatures exceeds the THERM limit temperature programmed by user in register address of 0x19, 0x1A, 0x20. Once THERM pin outputs low, it will remain asserted and will not be released until all measured temperature is lower than THERM limit minus THERM Hysteresis(also programmable in register address0x21). When the THERM pin is asserted, THERM Status bits of STATUS and THERM_STATUS registers will be set respectively and will not be cleared until the THERM pin is de-asserted. THERM trigger cannot be masked, which is unlike ALERT trigger. Below Figure 21 shows this mechanism. In general, THERM is later interrupt to inform MCU than ALERT.

PIN8 can be configured as 2nd THERM PIN (THERM2), by setting bit5 of Configuration 1 register as '1'.Once PIN8 is used as THERM2, only high-limit temperature is used as THERM-limit temperature, and user can ignore low-limit temperature register data. THERM2 pin can be released once all channels temperature drops below high-limit temperature minus hysteresis temperature.

Channel	THERM pin		THERM2 pin	
	Threshold Register	Hysteresis Register	Threshold Register	Hysteresis Register
Local	0x20, Default: 0x55 [85°C]	0x21, Default: 0x0A [10°C]	0x0B[MSB] + 0x3D[LSB], Default: 0x55 [85°C]	0x21, Default: 0x0A [10°C]
Remote 1	0x19, Default: 0x55 [85°C]	0x21, Default: 0x0A [10°C]	0x0D[MSB] + 0x13[LSB], Default: 0x55 [85°C]	0x21, Default: 0x0A [10°C]
Remote 2	0x1A, Default: 0x55 [85°C]	0x21, Default: 0x0A [10°C]	0x15[MSB] + 0x17[LSB], Default: 0x55 [85°C]	0x21, Default: 0x0A [10°C]

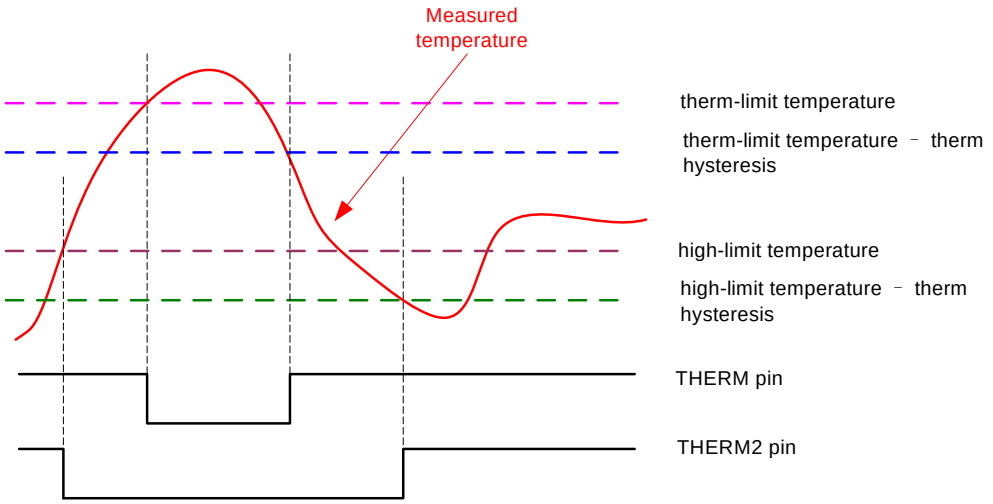

Figure 21. THERM pin and THERM2 pin output

1.9 Remote Diode Fault Alarm and Diode Selection

The chip can detect an open on each remote channel, between DP and DN pins (e.g. external diode is open or disconnected). In each temperature measurement cycle, the chip checks diode fault for each external diode. When a diode open is detected by the chip, the ALERT pin is asserted (ALERT is enabled and NOT masked). The temperature data is 0x00(MSB) and 0x00(LSB) if diode is open before POR. The temperature data is kept as last time conversion if diode open happens after POR. Also R1DO/R2DO bit of RDO Status register will be set '1'.Once a diode fault disappears, the R1DO/R2DO bit will be reset as '0', the temperature register gets back to the right data.

The chip is designed to measure both local and remote channels' temperature. For remote temperature sensing, the chip needs connection to an external diode, which could be a discrete diode or a discrete BJT (PNP type or NPN type) transistor with diode-connected. The external diode also can be substrate parasitic BJT transistor inside CPU, GPU or FPGA chips.

For remote channel, temperature accuracy mostly depends on external PN junction. It is better to select small-signal BJT transistor of proper performance with diode-connected. Proper performance includes below,

1). Vbe is between 250mV at 10uA and 950mV at 300uA;

2). Beta or current DC gain, is equal or larger than 30, if beta is smaller, user can use beta compensation feature to keep high temperature accuracy;

3). base resistance is below 100ohm, user can use series resistance cancellation feature to keep high temperature accuracy by setting SRCEN bit as '1'.

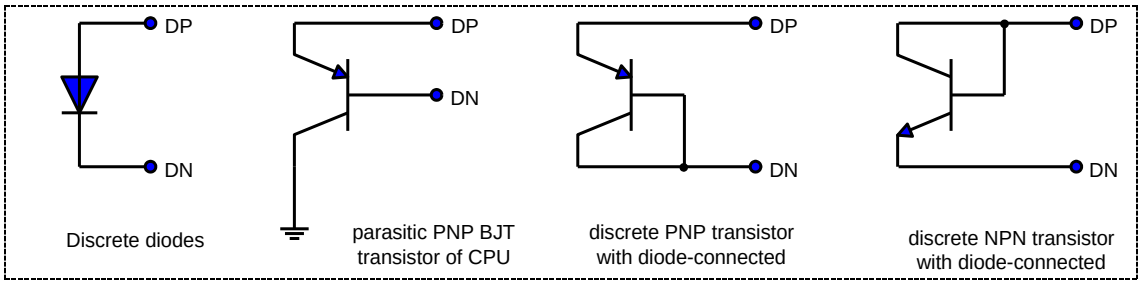

Figure 22. External Diode for Remote Channel

1.10 Beta Compensation

The physical fundamental of temperature sensing for remote channel is that temperature is proportion to collector current ratio. If using a discrete PNP (i.e. 2N3906) or NPN (i.e. 2N3904) as remote diode (even emitter or collector short to GND), beta is large enough, over 100,there is only slight difference between emitter current ratio and collector current ratio, so temperature error caused by transistor connection or beta variation piece by piece is still too small to be ignored. For example, assuming beta = 100, beta variation = ±10%, temperature error is about 0.13℃ at T = 85℃.

If using parasitic PNP transistor inside the CPU, GPU, FPGA or SoC chip as remote diode, collector is short to substrate, mostly the beta is below 1.0, temperature error caused by beta variation is significant, which cannot be ignored. For example, assuming beta = 0.45, beta variation = ±10%, temperature error is about 7.21℃^{oC} at T = 85℃.

More and more CPU, GPU, FPGA or SOC chips used advanced process with 45-nm geometry or below, the beta becomes smaller and smaller, temperature error caused by this should be corrected. The CT7432 builds in beta compensation feature to eliminate temperature error caused by lower beta. It can automatically detect and select the right range for different chips by setting register. See Beta Compensation Register section for detail.

1.11 Series Resistance Cancellation

For remote channel temperature measurement, there is always parasitic resistance including PCB trace, metal resistance on the die (parasitic PNP of CPU, GPU, FPGA or SoC chip) or base resistance (discrete transistor) from remote diode to the chip DP and DN pins. The temperature measurement principle is to measure voltage by forcing different current, so equivalent series resistance will introduce temperature error. The CT7432 builds in series resistance cancellation feature, which will eliminate temperature error caused by series resistance. It will automatically cancel this error by setting SRCEN bit as '1'. It allows maximum series resistance up to 1k ohm.

1.12 N-Factor Correction

For remote channel temperature sensing, the non-ideality coefficient is trimmed to 1.008. However not all transistors could be used as remote transistors are this exact value. The CT7432 builds in n-Factor correction feature, to allow user to adjust this coefficient by setting register, which can correct temperature measurement error caused by non-ideality coefficient. Note that, different coefficient stands for different slope over full temperature range, and cause different error at different temperature. See N-Factor Correction Register section for detail.

1.13 POR

The chip uses volatile memory. To prevent unclear power-supply conditions, which could happen in system application, from corrupting the data in memory and causing unexpected situation, a POR voltage detector monitors VCC. When VCC rises above threshold voltage(1.6V in typical), the logic blocks begin operating. Then the chip block will work normally along with VCC rising high enough gradually.

1.14 UVLO

The chip senses continuously supply voltage (VCC pin) when VCC has reached a minimum working voltage. Once VCC drops below 2.40V in typical ,the chip does not perform temperature conversion anymore. The last temperature data is used for the temperature measurement result.

2 Applications Information

2.1 How to Improve Temperature Accuracy

The temperature measurement of the chip is based on semiconductor physics principle --Forward voltage of diode is a function of temperature. The formula is shown as below.

$$V_F = \frac{kT}{q}\ln\left(\frac{I_F}{I_S}\right)$$

Here,

V_F -- forward voltage; *I_F -- forward current*

I_S -- reverse saturation current; *k -- Boltzmann constant*

T -- Temperature in K; *q -- Electric charge constant*

To cover wide temperature range, i.e. -40°C to 125°C, a very small voltage variation is corresponding to each degree C temperature change. For this chip, 200μV voltage between DP and DN pin stands for about1°C.Sensylink has applied many ways to improve measurement accuracy in chip circuits design, such as compensation, trimming etc. In real system design, however, some factors that can increase measurement error need to be considered. Most issues that usually occur are highlighted as below.

2.1.1 Serial Resistor (R_S), Differential Capacitor (C_d) of Remote Channel

In most applications, the remote diode could be located noise environment. Generally 200μV stands for about 1°C, any common-mode noise between DP and DN pin will cause temperature measurement error. The better way to use serial resistor (Rs) plus Differential Capacitor (Cd) to filter noise coupled to DP, DN wire. The sensor chip built-in serial resistor cancellation circuits which can remove the temperature measurement error caused by Rs. The maximum resistance does not exceed 1.0k ohm for Rs. For the differential capacitor, it will affect setup and sampling time of AD converter, so the maximum capacitance does not exceed 1000pF. For example, Rs = 50ohm, Cd = 100pF. If the remote channel is NOT used, it is better to short DP and DN pins together.

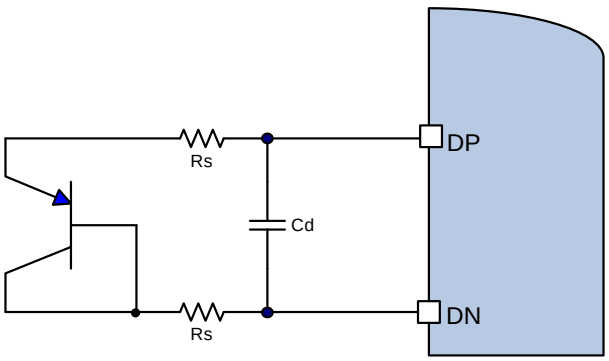

Figure 23. Rs and Cd for Remote Channel

2.1.2 Thermal Response Time

It is very necessary to wait enough time for obvious temperature changing of target due to thermal time constant. Enough time is still needed for the target to reach thermal equilibrium, even forcing temperature transient into target object. For the chip soldered on the PCB with almost same size as MSOP-10 package, it will take about 20 seconds to reach thermal equilibrium under 1°C accuracy after putting into oil bath with100°C suddenly from room temperature,. For remote channel, if using a discrete transistor as thermal diode, the package of transistor is another important consideration which could affect thermal response. For examples, using 2N3904 as thermal diode, SOT-23 package has better thermal contact than TO-92 package.

2.1.3 Self-heating

For local channel, self-heating could affect temperature measurement accuracy. It always brings positive error. It could be estimated as below steps.

Step 1, Estimating the chip power consumption, caused by average operating current and sink current at $\overline{\text{ALERT}}$ pin, $\overline{\text{THERM}}$ pin. For example,

Pd1 = V_{CC} * I_{AOC} = 5.0V * 45uA = 225uW

(Assuming Vcc is 5.0V, conversion rate is 0.0625Hz.)

Pd2 = V_{OL} * I_{SINK} = 0.1V *0.5mA *2 = 0.1mW

(Assuming in normal operating, both $\overline{\text{ALERT}}$ pin and $\overline{\text{THERM}}$ pins are active, and pull-up resistors are 10k)

Pdtotal = Pd1 + Pd2 = 225uW + 0.1mW = 325uW

Step 2, Estimating junction temperature error caused by power consumption,

delta Tj = Pdtotal * Theta J-A = 325uW * 140°C/W = 45.5m°C = 0.04°C,which is too small to be ignored.

For this package, thermal resistance of junction-to-air is 140°C/W.

2.2 PCB Layout

Cautions below are important to improve temperature measurement in PCB layout design.

2.2.1 Device placement

It is better to place the sensor chip away from any thermal source (e.g. power device in board), high speed digital bus (e.g. memory bus), coil device (e.g. inductors) and wireless antenna (e.g. Bluetooth, WiFi, RF). It is recommended to place the chip close to the remote diode. The better way is to use serial resistor (R_S) plus differential capacitor (C_d) for each remote channel to filter noise.

2.2.2 DP, DN Route in PCB

It is better to draw the traces of DP and DN net list as a pair trace and to make sure that the two are always kept with the same distance and the same layer in PCB board. Also it is better NOT TO change PCB layer for this pair trace, which means to keep trace to the same layer as the chip and remote diode.

2.2.3 Twisted cable and shield

Another method is to use ground shield around the DP, DN pair trace, which could reduce digital noise. Twisted cable with shield is recommended for long distance temperature measurement that uses a discrete diode as the remote channel. Shield is shorted to ground.

2.2.4 Leakage from DP/DN to GND or VCC

Another possibility caused temperature error is leakage path from DP/DN to GND or from DP/DN to VCC. The leakage path caused by tight layout, assembly, splashing unclear water or some reason during production.

Package Outline Dimensions (MSOP-10)

MSOP-10 **Unit (mm)**

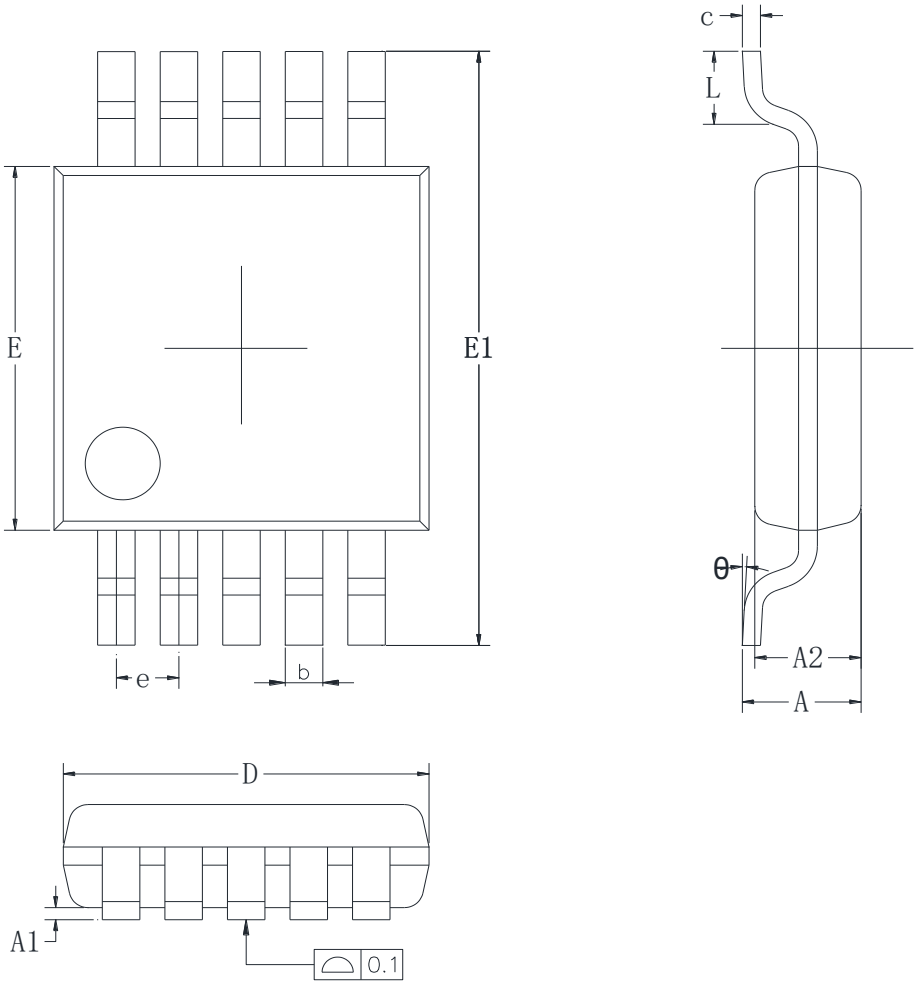

Symbol	Dimensions in Millimeters		Dimensions in Inches	
	Min.	Max.	Min.	Max.
A	0.820	1.100	0.032	0.043
A1	0.020	0.150	0.001	0.006
A2	0.750	0.950	0.030	0.037
b	0.180	0.280	0.007	0.011
c	0.090	0.250	0.004	0.010
D	2.900	3.100	0.114	0.122
E	2.900	3.100	0.114	0.122
E1	4.700	5.100	0.185	0.201
e	0.500（BSC）		0.020（BSC）	
L	0.400	0.800	0.016	0.031
θ	0°	8°	0°	8°

Recommend Land Pattern Layout (MSOP-10)

MSOP-10 **Unit (mm)**

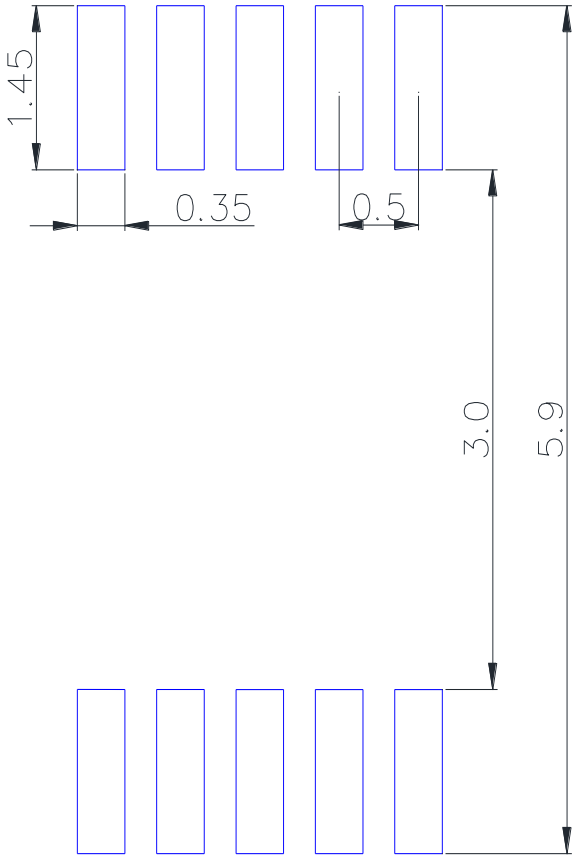

Note:

1 All dimensions are in millimeter

2 Recommend tolerance is within ±0.1mm

3 Change without notice

Package Outline Dimensions (DFN3x3-10)

DFN3x3-10 Unit (mm)

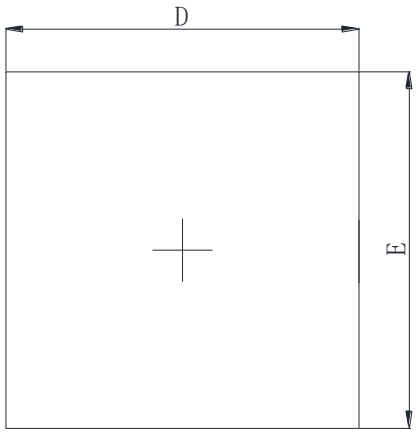

Top View

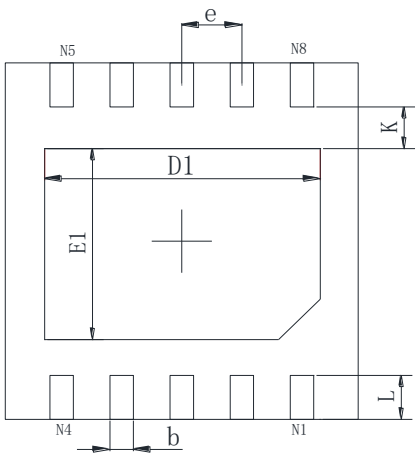

Bottom View

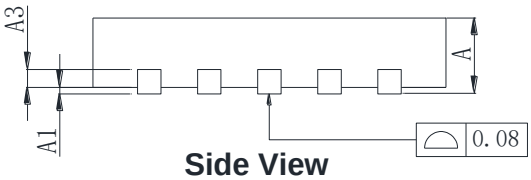

Side View

Symbol	Dimensions in Millimeters		Dimensions in Inches	
	Min.	Max.	Min.	Max.
A	0.700	0.800	0.028	0.031
A1	0.000	0.050	0.000	0.002
A3	0.203REF.		0.008REF	
D	2.900	3.100	0.114	0.122
E	2.900	3.100	0.114	0.122
D1	2.200	2.600	0.087	0.102
E1	1.400	1.800	0.055	0.071
k	0.20MIN.		0.008REF	
b	0.200	0.300	0.008	0.012
e	0.500TYP.		0.020TYP	
L	0.300	0.500	0.012	0.020

Note： pin 1 shape for thermal pad on backside is not limited to bevel, it can be a notch or arch

Recommend Land Pattern Layout (DFN3x3-10)

DFN3x3-10 Unit (mm)

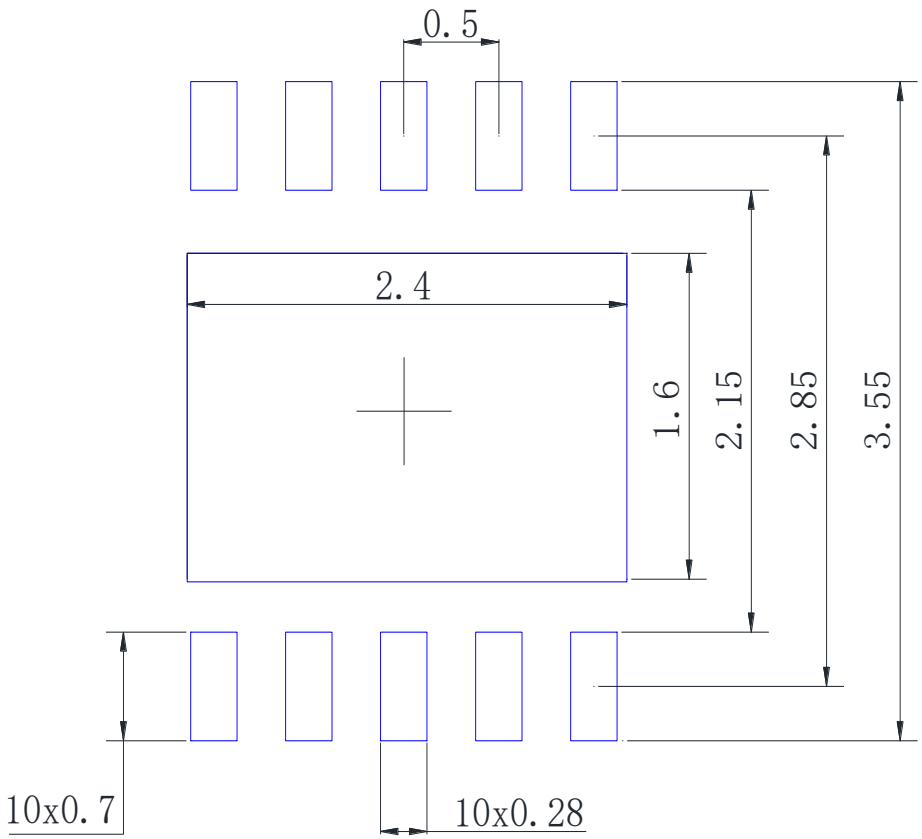

Note：

1. All dimensions are in millimeter
2. Recommend tolerance is within ±0.1mm
3. If the thermal pad is not necessary, designer can leave the land pattern area blank
4. Change without notice

Packing information

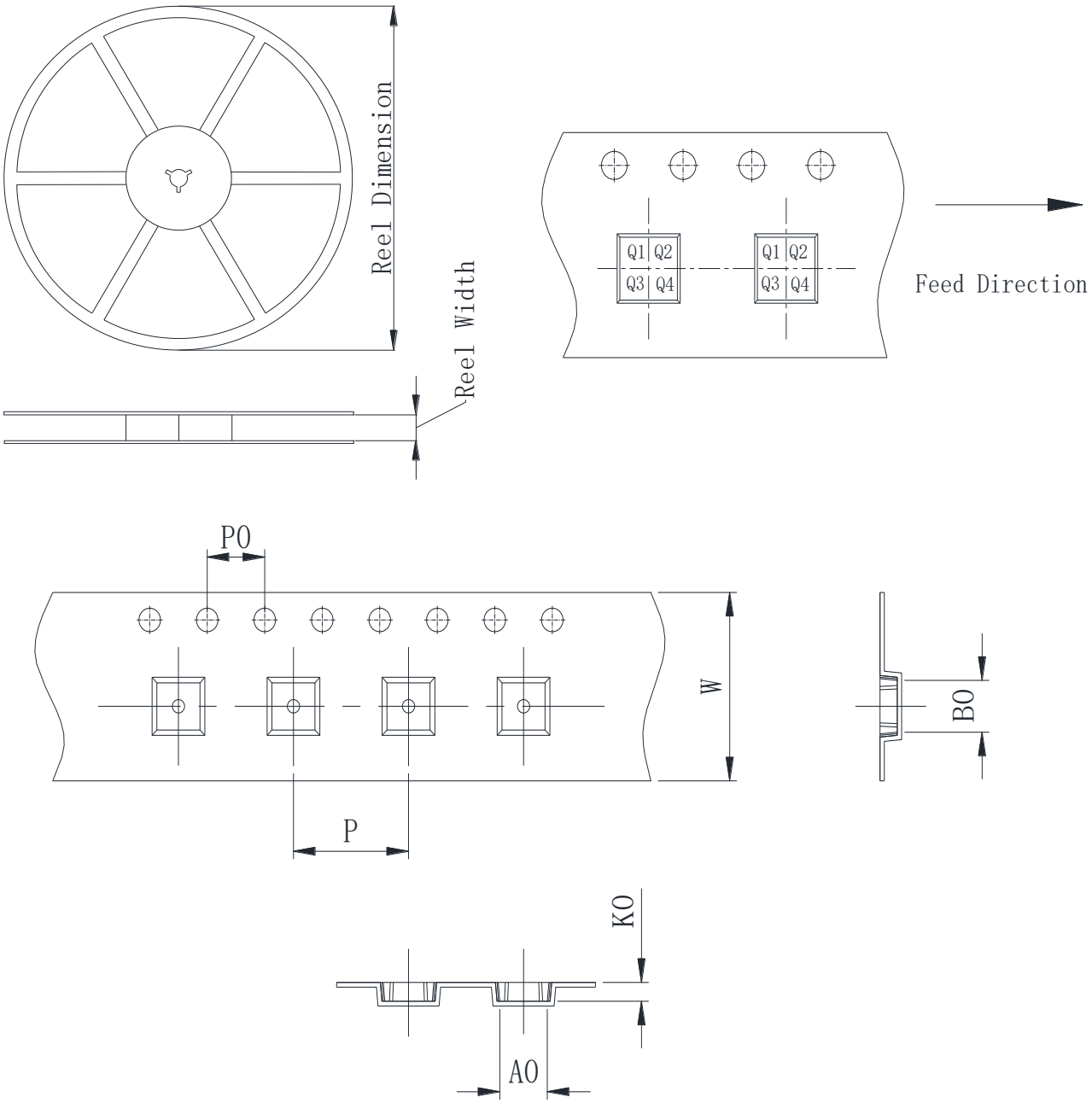

Package type	Reel size	Reel dimension	Reel width(mm)	A0(mm)	B0(mm)	K0(mm)	P(mm)	P0(mm)	W(mm)	Pin1
MSOP-10	13'	330±3.0	12.8±1.0	5.2±0.1	3.3±0.1	1.5±0.1	8.0±0.1	4.0±0.1	12±0.3	Q1
DFN3x3-10	13'	330±3.0	12.8±1.0	3.35±0.1	3.35±0.1	1.13±0.1	8.0±0.1	4.0±0.1	12±0.3	Q2

Revision History

Version	Date	Change Content
Ver1.0	2020/08	Initial Version

SENSYLINK

SENSYLINK Microelectronics Co.,Ltd

www.sensylink.com

IMPORTANT NOTICE

SENSYLINK Microelectronics Co., Ltd reserves the right to make modifications, enhancements, improvements, corrections or other changes without further notice to this document and any product described herein or to discontinue any product or service. Customers should obtain the latest relevant information before placing orders and should verify the latest and complete information. SENSYLINK Microelectronics does not assume any responsibility for use of any product, nor does SENSYLINK Microelectronics any liability arising out of the application or use of this document or any product or circuit described herein. SENSYLINK Microelectronics assumes no liability for applications assistance or the design of Customers' products. Customers are responsible for their products and applications using SENSYLINK Microelectronics components. SENSYLINK Microelectronics does not convey any license under its patent or trademark rights nor the other rights.

SENSYLINK Microelectronics Co., Ltd©2020.