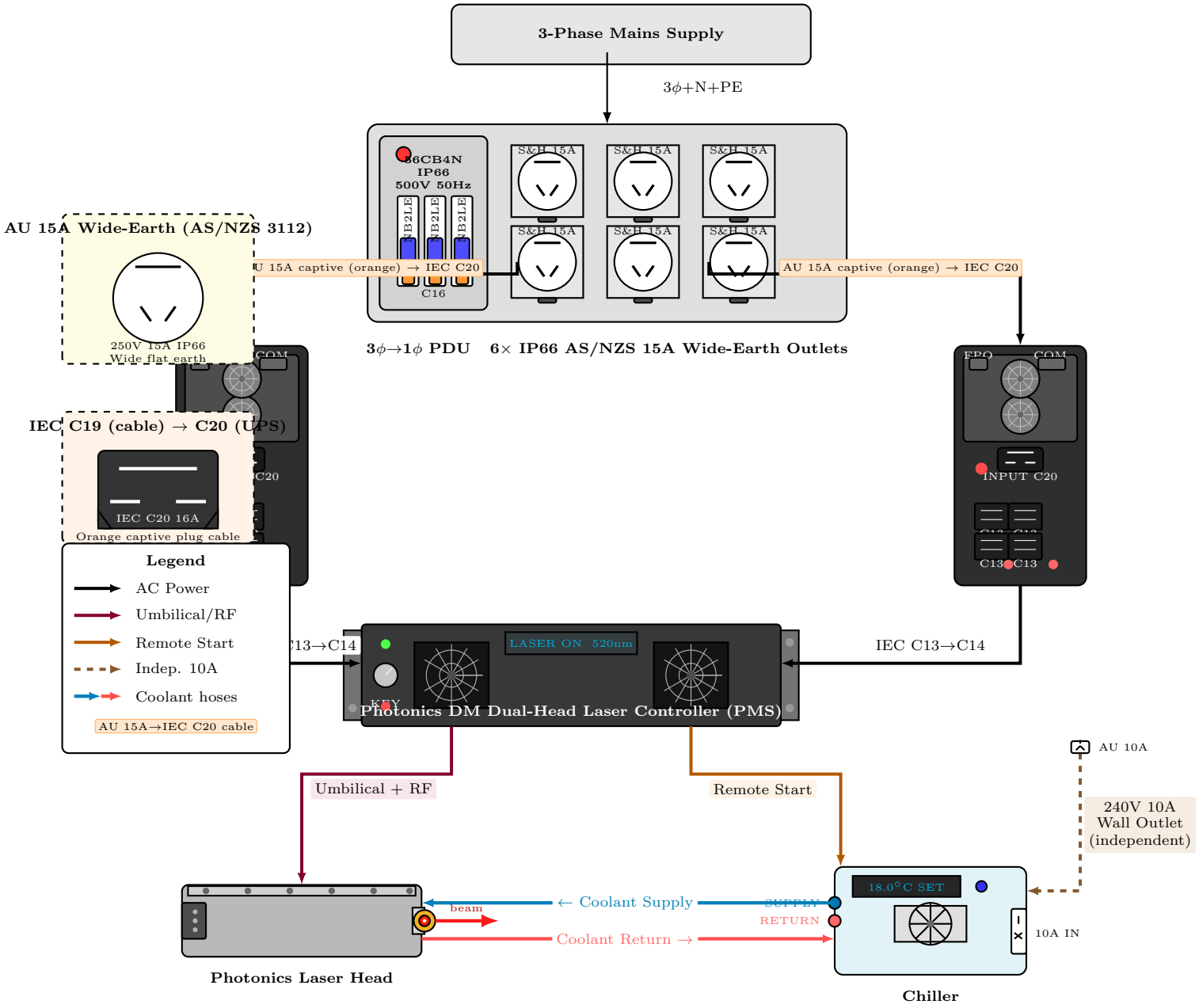Laser System Power Distribution AU/NZ