PRELIMINARY PREPRINT VERSION: DO NOT CITE
The AAAI Digital Library will contain the published
version some time after the conference.

Pretrained Cost Model for Distributed Constraint Optimization Problems

Yanchen Deng, Shufeng Kong*, Bo An

School of Computer Science and Engineering, Nanyang Technological University, Singapore
{ycdeng, shufeng.kong, boan}@ntu.edu.sg

Abstract

Distributed Constraint Optimization Problems (DCOPs) are an important subclass of combinatorial optimization problems, where information and controls are distributed among multiple autonomous agents. Previously, Machine Learning (ML) has been largely applied to solve combinatorial optimization problems by learning effective heuristics. However, existing ML-based heuristic methods are often not generalizable to different search algorithms. Most importantly, these methods usually require full knowledge about the problems to be solved, which are not suitable for distributed settings where centralization is not realistic due to geographical limitations or privacy concerns. To address the generality issue, we propose a novel directed acyclic graph representation schema for DCOPs and leverage the Graph Attention Networks (GATs) to embed graph representations. Our model, GAT-PCM, is then pretrained with optimally labelled data in an offline manner, so as to construct effective heuristics to boost a broad range of DCOP algorithms where evaluating the quality of a partial assignment is critical, such as local search or backtracking search. Furthermore, to enable decentralized model inference, we propose a distributed embedding schema of GAT-PCM where each agent exchanges only embedded vectors, and show its soundness and complexity. Finally, we demonstrate the effectiveness of our model by combining it with a local search or a backtracking search algorithm. Extensive empirical evaluations indicate that the GAT-PCM-boosted algorithms significantly outperform the state-of-the-art methods in various benchmarks. Our pretrained cost model is available at https://github.com/dyc941126/GAT-PCM.

Introduction

As a fundamental formalism in multi-agent systems, Distributed Constraint Optimization Problems (DCOPs) (Modi et al. 2005) capture the essentials of cooperative distributed problem solving and have been successfully applied to model the problems in many real-world domains like radio channel allocation (Monteiro et al. 2012), vessel navigation (Hirayama et al. 2019), and smart grid (Fioretto et al. 2017).

Over the past two decades, numerous algorithms have been proposed to solve DCOPs and can be generally classified as complete and incomplete algorithms. Complete algorithms aim to exhaust the search space and find the optimal solution by either distributed backtracking search (Hirayama and Yokoo 1997; Modi et al. 2005; Litov and Meisels 2017; Yeoh, Felner, and Koenig 2010) or dynamic-programming (Chen et al. 2020; Petcu and Faltings 2005, 2007). However, complete algorithms scale poorly and are unsuitable for large real-world applications. Therefore, considerable research efforts have been devoted to develop incomplete algorithms that trade the solution quality for smaller computational overheads, including local search (Maheswaran, Pearce, and Tambe 2004; Okamoto, Zivan, and Nahon 2016; Zhang et al. 2005), belief propagation (Cohen, Galiki, and Zivan 2020; Farinelli et al. 2008; Rogers et al. 2011; Zivan et al. 2017; Chen et al. 2018) and sampling (Nguyen et al. 2019; Ottens, Dimitrakakis, and Faltings 2017).

However, the existing DCOP algorithms usually rely on handcrafted heuristics which need expertise to tune for different settings. In contrast, Machine Learning (ML) based techniques learn effective heuristics for existing methods automatically (Bengio, Lodi, and Prouvost 2021; Gasse et al. 2019; Lederman et al. 2020), achieving state-of-the-art performance in various challenging problems like Mixed Integer Programming (MIP), Capacitated Vehicle Routing Problems (CVRPs), and Boolean Satisfiability Problems (SATs). Unfortunately, these methods are often not generalizable to different search algorithms. Most importantly, many of these methods usually require the full knowledge about the problems to be solved, making them unsuitable for a distributed setting where centralization is not realistic due to geographical limitations or privacy concerns.

Therefore, we develop the first general-purpose ML model, named GAT-PCM, to generate effective heuristics for a wide range of DCOP algorithms and propose a distributed embedding schema of GAT-PCM for decentralized model inference. Specifically, we make the following key contributions: (1) We propose a novel directed tripartite graph representation based on microstructure (Jégou 1993) to encode a partially instantiated DCOP instance and use Graph Attention Networks (GATs) (Vaswani et al. 2017) to learn generalizable embeddings. (2) Instead of generating heuristics for a particular algorithm, GAT-PCM predicts the optimal cost of a target assignment given a partial assignment, such that it can be applied to boost the performance of a wide range

*Corresponding Author
Copyright © 2022, Association for the Advancement of Artificial Intelligence (www.aaai.org). All rights reserved.

of DCOP algorithms where evaluating the quality of an assignment is critical. To this end, we pretrain our model on a dataset where DCOP instances are sampled from a problem distribution, partial assignments are constructed according to pseudo trees, and cost labels are generated by a complete algorithm. (3) We propose a Distributed Embedding Schema (DES) to perform decentralized model inference without disclosing local constraints, where each agent exchanges only the embedded vectors via localized communication. We also theoretically show the correctness and complexity of DES. (4) As a case study, we develop two efficient heuristics for DLNS (Hoang et al. 2018) and backtracking search for DCOPs based on GAT-PCM, respectively. Specifically, by greedily constructing a solfution, our GAT-PCM can serve as a subroutine of DLNS to repair assignments. Besides, the predicted cost of each assignment is used as a criterion for domain ordering in backtracking search. (5) Extensive empirical evaluations indicate that GAT-PCM-boosted algorithms significantly outperform the state-of-the-art methods in various standard benchmarks.

Related Work

There is an increasing interest of applying neural networks to solve SAT problems in recent years. Selsam et al. (2019) proposed NeuroSAT, a message passing neural network built upon LSTMs (Hochreiter and Schmidhuber 1997) to predict the satisfiability of a SAT and further decode the satisfying assignments. Yolcu and Póczos (2019) proposed to use Graph Neural Networks (GNNs) to encode a SAT and REINFORCE (Williams 1992) to learn local search heuristics. Similarly, Kurin et al. (2020) proposed to learn branching heuristics for a CDCL solver (Eén and Sörensson 2003) using GNNs and DQN (Mnih et al. 2015). Beside boolean formulas, Xu et al. (2018) proposed to use CNNs (LeCun et al. 1989) to predict the satisfiability of a general Constraint Satisfaction Problem (CSP). However, all of these methods require the total knowledge of a problem, making them unsuitable for distributed settings. Differently, our method uses an efficient distributed embedding schema to cooperatively compute the embeddings without disclosing constraints.

Very recently, there are two concurrent work (Deng et al. 2021; Razeghi et al. 2021) which uses Multi-layer Perceptrons (MLPs) to parameterize the high-dimensional data in traditional constraint reasoning techniques, e.g., Bucket Elimination (Dechter 1998). Unfortunately, they follow an online learning strategy, which removes the most attractive feature of generalizing to new instances offered by neural networks. As a result, they require a significantly long runtime in order to train the MLPs. In contrast, we aim to develop an ML model for DCOPs which is supervisely pretrained with large-scale datasets beforehand. When applying the model to an instance, we just need several steps of model inference, which substantially reduces the overall overheads.

Backgrounds

In this section, we present preliminaries including DCOPs, GATs and pretrained models.

Distributed Constraint Optimization Problems A Distributed Constraint Optimization Problem (DCOP) (Modi et al. 2005) can be defined by a tuple $\langle I, X, D, F\rangle$ where $I = \{1, \dots, |I|\}$ is the set of agents, $X = \{x_1, \dots, x_{|X|}\}$ is the set of variables, $D = \{D_1, \dots, D_{|X|}\}$ is the set of discrete domains and $F = \{f_1, \dots, f_{|F|}\}$ is the set of constraint functions. Each variable x_i takes a value from its domain D_i and each function $f_i : D_{i_1} \times \cdots \times D_{i_k} \to \mathbb{R}_{\geq 0}$ defines the cost for each possible combination of $D_{i_1}, \dots, D_{i_k}$. Finally, the objective is to find a joint assignment $X \in D_1 \times \cdots \times D_{|X|}$ such that the following total cost is minimized:

$$\min_X \sum\nolimits_{f_i \in F} f_i(X). \tag{1}$$

For the sake of simplicity, we follow the common assumptions that each agent only controls a variable (i.e., $|I| = |X|$) and all constraints are binary (i.e., $f_{ij} : D_i \times D_j \to \mathbb{R}_{\geq 0}, \forall f_{ij} \in F$). Therefore, the term "agent" and "variable" can be used interchangeably and a DCOP can be visualized by a constraint graph in which vertices and edges represent the variables and constraints of the DCOP, respectively.

Graph Attention Networks Graph attention networks (GATs) (Veličković et al. 2017) are constructed by stacking a number of graph attention layers in which nodes are able to attend over their neighborhoods' features via the self-attention mechanism. Specifically, the attention coefficient between every pair of neighbor nodes is computed as $e_{ij} = a(\mathbf{W}h_i, \mathbf{W}h_j)$, where $h_i, h_j \in \mathbb{R}^d$ are node features, $\mathbf{W} \in \mathbb{R}^{d\times d}$ is a weight matrix, and a is single-layer feed-forward neural network. Then the attention weight α_{ij} for nodes $j \in \mathcal{N}_i$ is computed as $\alpha_{ij} = \frac{\exp(e_{ij})}{\sum_{k\in\mathcal{N}_i}\exp(e_{ik})}$, where $\mathcal{N}_i$ is the neighborhood of node v_i in the graph (including v_i). At last, node v_i's feature h'_i is updated as $h'_i = g(\sum_{j\in\mathcal{N}_i}\alpha_{ij}\mathbf{W}h_j)$, where g is some nonlinear function such as the sigmoid. Multi-head attention (Vaswani et al. 2017) is also used where K independent attention mechanisms are executed and their feature vectors are averaged as $h'_i = g(\frac{1}{K}\sum_{k=1}^{K}\sum_{j\in\mathcal{N}_i}\alpha^k_{ij}\mathbf{W}^k h_j)$.

Pretrained Models The idea behind pretrained models is to first pretrain the models using large-scale datasets beforehand, then apply the models in downstream tasks to achieve state-of-the-art results. Beside significantly reducing the training overhead, pretrained models also offer substantial performance improvement over learning from scratch, leading to great successes in natural language processing (Brown et al. 2020; Devlin et al. 2018) and computer vision (He et al. 2016; Krizhevsky, Sutskever, and Hinton 2017; Simonyan and Zisserman 2014).

In this work, we aim to develop the first effective and general-purpose pretrained model for DCOPs. In particular, we are interested in training a cost model $\mathcal{M}_\theta$ to predict the optimal cost of a partially instantiated DCOP instance, which is a core task in many DCOP algorithms:

$$\mathcal{M}_\theta(P, x_i = d_i; \Gamma) \mapsto \mathbb{R}, \tag{2}$$

where $P \equiv \langle I, X, D, F\rangle$ is a DCOP instance, Γ is a partial assignment, $x_i = d_i$ is the target assignment, and variable

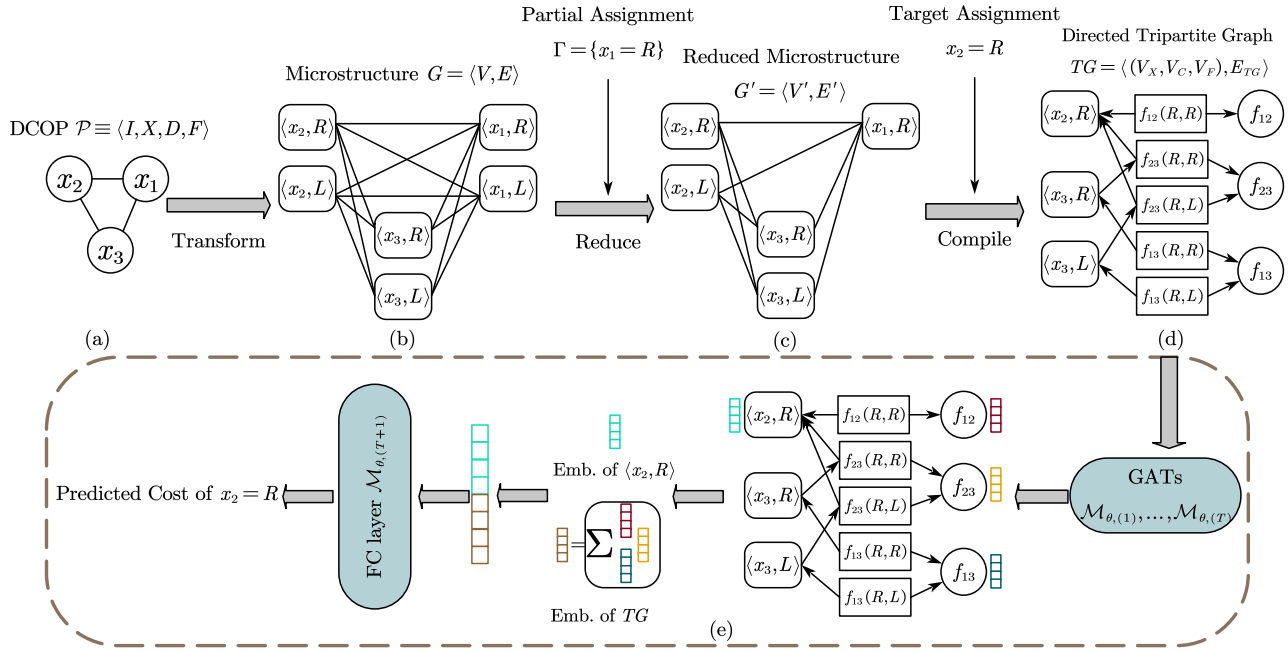

Figure 1: An illustration of the architecture of GAT-PCM with a small DCOP instance. A DCOP instance in (a) is first transformed into an equivalent microstructure G in (b), and then G is instantiated with a partial assignment Γ by removing some nodes and edges in (c) and then further compiled to a directed tripartite graph with a given target assignment in (d) (cf. the section "Graph Representations" for details) in (e). Finally, we use GATs to learn an embedding with supervised training (cf. the sections "Graph Embeddings" and "Pretraining" for details).

x_i does not appear in Γ. This way, our cost model can be applied to a wide range of DCOP algorithms where evaluating the quality of an assignment is critical.

Pretrained Cost Model for DCOPs

In this section, we elaborate our pretrained cost model GAT-PCM. We begin with illustrating the architecture of the model in Fig. 1. We then outline the centralized pretraining procedure for the model in Algo. 1 to learn generalizable cost heuristics. We further propose a distributed embedding schema for decentralized model inference in Algo. 2. Finally, we show how to use GAT-PCM to construct effective heuristics to boost DCOP algorithms.

The architecture of our GAT-PCM is illustrated in Fig. 1. Recall that we aim to train a model to predict the optimal cost of a partially instantiated DCOP instance (cf. Eq. (2)) and thus, we first need to embed a partially instantiated DCOP instance and the key is to build a suitable graph representation for a partially instantiated DCOP instance.

Graph Representations Since DCOPs can be naturally represented by graphs with arbitrary sizes, we resort to GATs to learn generalizable and permutation-invariant representation of DCOPs. To this end, we first transform a DCOP instance $P \equiv \langle I, X, D, F \rangle$ to a microstructure representation (Jégou 1993) where each variable assignment corresponds to a vertex and the constraint cost between a pair of vertices is represented by a weighted edge (cf. Fig. 1(b)). After that, for each assignment $x_i = d_i$ in the partial assignment Γ, we remove all the other variable-assignment vertices of x_i, except $\langle x_i, d_i \rangle$, and their related edges from the microstructure (cf. Fig. 1(c)). Then the reduced microstructure represents the partially instantiated DCOP instance w.r.t. Γ.

The reduced microstructure is further compiled into a directed tripartite graph $TG = \langle (V_X, V_C, V_F), E_{TG} \rangle$ which serves as the input of our GAT-PCM model (cf. Fig. 1(d)). Specifically, for each edge in the microstructure, we insert a constraint-cost node $v_c \in V_C$ which corresponds to the constraint cost between the related pair of variable assignments. For each constraint function $f \in F$, we also create a function node $v_f \in V_F$ in the graph, and each related constraint-cost node will be directed to v_f. Note that v_f can be regarded as the *proxy* of all related constraint-cost nodes. Besides, variable-assignment nodes related to Γ will also be removed from the tripartite graph since they are *subsumed* by their related constraint-cost nodes.

Finally, we note that the loopy nature of undirected microstructure may lead to missense propagation and potentially cause an oversmoothing problem (Li et al. 2019). For example, $\langle x_3, R \rangle$ should be independent of $\langle x_3, L \rangle$ since they are two different assignments of the same variable. However, $\langle x_3, L \rangle$ could indirectly influence $\langle x_3, R \rangle$ through multiple paths (e.g., $\langle x_3, L \rangle - \langle x_2, R \rangle - \langle x_3, R \rangle$) when applying GATs. Therefore, we require the tripartite graph to be directed and acyclic such that each constraint-cost node or variable-assignment node has a path to the target variable-assignment node. Specifically, we determine the directions between constraint-cost nodes and variable-

assignment nodes through a two-phase procedure. First, we build a Directed Acyclic Graph (DAG) for a constraint graph induced by the set of unassigned variables such that every unassigned variable has a path to the target variable. To this end, we build a pseudo tree PT (Freuder and Quinn 1985) with the target variable as its root and use PT as the DAG where each node of PT will be directed to its parent or pseudo parents. Second, for any pair of constrained variables x_i and x_j in the DAG, where x_i is the precursor of x_j, and any related pair of variable assignments $\langle x_i, d_i \rangle$ and $\langle x_j, d_j \rangle$, we set the node of $\langle x_i, d_i \rangle$ to be the precursor of the constraint-cost node of $f_{ij}(d_i, d_j)$ and set the constraint-cost node of $f_{ij}(d_i, d_j)$ to be the precursor of the node of $\langle x_j, d_j \rangle$ in the tripartite graph. Note that constraint-cost nodes related to a unary function will be set to be the precursor of their corresponding variable-assignment nodes.

For space complexity, given an instance with $|I|$ variables and maximum domain size of d, the directed acyclic tripartite graph has $O(d|I|)$ variable-assignment nodes, $O(|I|^2)$ function nodes and $O(d^2|I|^2)$ constraint-cost nodes.

Graph Embeddings Given a directed tripartite graph representation, we use GATs to learn an embedding with supervised training (cf. Fig. 1(e)). Each node v_i has a four-dimensional initial feature vector $h_i^{(0)} \in H^{(0)}$ where the first three elements denote the one-hot encoding of node types (i.e., variable-assignment nodes, constraint-cost nodes, and function nodes) and the last element is set to be the constraint cost of v_i if it is a constraint-cost node and otherwise, 0. The initial feature matrix $H^{(0)}$ is then embedded through T layers of the GAT. Formally,

$$H^{(t)} = \mathcal{M}_{\theta,(t)}(H^{(t-1)}), \quad t = 1, \ldots, T, \tag{3}$$

where $H^{(t)}$ is the embedding in the t-th timestep and $\mathcal{M}_{\theta,(t)}$ is the t-th layer of the GAT. Finally, given a target variable-assignment $x_m = d_m$ and a partial assignment Γ, we predict the optimal cost of the partially instantiated problem instance induced by $\Gamma \cup \{x_m = d_m\}$ based on the embedding of the node of $v_m = \langle x_m, d_m \rangle \in V_X$ and the accumulated embedding of all function nodes of the tripartite graph as follows:

$$\hat{c}_m = \mathcal{M}_{\theta,(T+1)}(h_m^{(T)} \oplus \sum_{v_i \in V_F} h_i^{(T)}), \tag{4}$$

where $\mathcal{M}_{\theta,(T+1)}$ is a fully-connected layer and $\oplus$ is the concatenation operation.

Note that, by our construction of the tripartite graph, function nodes are the proxies of all constraint-cost nodes and all the other variable-assignment nodes have been directed to the target variable-assignment node. Therefore, we do not need to include the embeddings of constraint-cost nodes and variable-assignment nodes except the target variable-assignment node in Eq. (4).

Pretraining Algorithm 1 sketches the training procedure. For each epoch, we first generate labelled data (i.e., partial assignments, target assignments and corresponding optimal costs) in phase I and then train our model in phase II.

Algorithm 1: Offline pretraining procedure

Require: number of training epochs N, number of training iterations K, problem distribution $\mathcal{P}$, optimal DCOP algorithm $\mathcal{A}$, capacitated FIFO buffer $\mathcal{B}$

1: **for** $n = 1, \ldots, N$ **do**
Phase I: generating labelled data
2: $P \equiv \langle I, X, D, F \rangle \sim \mathcal{P}$, $PT \leftarrow$ build a pseudo tree for P
3: **for all** $x_i \in X$ **do**
4: $Sep(x_i) \leftarrow$ anc. connecting x_i and its desc. in PT
5: **for all** context $\Gamma_i \in \Pi_{x_j \in Sep(x_i)} D_j$ **do**
6: **for all** $d_i \in D_i$ **do**
7: $P' \leftarrow$ REDUCE$(P, \Gamma_i, x_i = d_i)$
8: $c^* \leftarrow \mathcal{A}(P')$, $\mathcal{B} \leftarrow \mathcal{B} \cup \{\langle P, \Gamma_i, x_i = d_i, c^* \rangle\}$
Phase II: training the model
9: **for** $k = 1, \ldots, K$ **do**
10: $B \leftarrow$ sample a batch of data from $\mathcal{B}$
11: train the model $\mathcal{M}_\theta$ to minimize Eq. (5)
return $\mathcal{M}_\theta$

Specifically, we first sample a DCOP instance P from the problem distribution $\mathcal{P}$. For each target variable x_i, instead of randomly generating partial assignments, we build a pseudo tree PT and use its contexts w.r.t. PT as partial assignments (line 2-5). In this way, we avoid redundant partial assignments by focusing only on the variables that are constrained with x_i or its descendants. After obtaining the subproblem rooted at x_i (cf. procedure REDUCE), we apply any off-the-shelf optimal DCOP algorithm $\mathcal{A}$ to solve P' to get the optimal cost c^* (line 6-8).

Each tuple of partial assignment, target assignment, optimal cost and problem instance will be stored in a capacitated FIFO buffer $\mathcal{B}$. In phase II, we uniformly sample a batch B of data from the buffer to train our model using the mean squared error loss:

$$\mathcal{L}(\theta) = \frac{1}{|B|} \sum_{\langle P, \Gamma, x_i = d_i, c^* \rangle \in B} (\mathcal{M}_\theta(P, x_i = d_i; \Gamma) - c^*)^2. \tag{5}$$

Distributed Embedding Schema Different from pretraining stage where the model has access to all the knowledge (e.g., variables, domains, constraints, etc.) about the instance to be solved, an agent in real-world scenarios usually can only be aware of its local problem due to privacy concern and/or geographical limitation, posing a significant challenge when applying our model to solve DCOPs. Also, centralized model inference could overwhelm a single agent. Therefore, we aim to develop a distributed schema for model inference in which each agent only uses its local knowledge to cooperatively compute Eq. (3) and Eq. (4).

We exploit the directed and acyclic nature of our tripartite graph and propose an efficient Distributed Embedding Schema (DES) in Algorithm 2. The general idea is that each agent maintains the embeddings w.r.t. its local problem. Specifically, an agent i maintains the following components: (1) its own variable-assignment nodes and (induced) unary constraint-cost and function nodes; (2) all function nodes f_{ij} where x_j is a successor of x_i; and (3) all constraint-cost nodes $f_{ij}(d_i, d_j)$ where x_j is a successor of x_i. Each time the agent updates the local embeddings via a single step of model inference after receiving the embeddings from its pre-

Algorithm 2: Distributed embedding schema for agent i

Require: trained model $\mathcal{M}_\theta$, precursors P_i, successors S_i, target assignment $x_m = d_m$, initial variable-assignment node feature $h_X^{(0)}$, initial function node feature $h_F^{(0)}$, one-hot encoding for constraint-cost node $h_C^{(0)}$

1: **When** INITIALIZATION:
2: $Cache_i \leftarrow []$, $H_i^{(0)} \leftarrow$ empty tensor
3: **for** $t = 1, \ldots, T$ **do** $Cache_i[t] \leftarrow$ empty map
4: **if** $x_i = x_m$ **then** $H_i^{(0)} \leftarrow \textsc{Stack}(H_i^{(0)}, h_X^{(0)})$
5: **else**
6: **for all** $d_i \in D_i$ **do** $H_i^{(0)} \leftarrow \textsc{Stack}(H_i^{(0)}, h_X^{(0)})$
7: **for all** $j \in S_i$ **do**
8: $H_i^{(0)} \leftarrow \textsc{Stack}(H_i^{(0)}, h_F^{(0)})$
9: **for all** cost value $c_{ij} \in f_{ij}(\cdot,\cdot)$ **do**
10: $H_i^{(0)} \leftarrow \textsc{Stack}(H_i^{(0)}, h_C^{(0)} \oplus c_{ij})$
11: **for all** $j \in P_i$ **do**
12: **for all** cost value $c_{ji} \in f_{ji}(\cdot,\cdot)$ **do**
13: $H_i^{(0)} \leftarrow \textsc{Stack}(H_i^{(0)}, h_C^{(0)} \oplus c_{ji})$
14: $\ell_i \leftarrow$ zero vector, $t_i \leftarrow 1$, $H_i^{(t_i)} \leftarrow \mathcal{M}_{\theta,(t_i)}(H_i^{(t_i-1)})$
15: send $H_i^{(t_i)}[f_{ij}(\cdot,\cdot)]$ to j, $\forall j \in S_i$
16: **if** $P_i = \emptyset$ **then**
17: **for** $t_i = 2, \ldots, T$ **do**
18: $H^{(t_i)} \leftarrow \mathcal{M}_{\theta,(t_i)}(H^{(t_i-1)})$
19: **if** $t_i < T$ **then**
20: send $H_i^{(t_i)}[f_{ij}(\cdot,\cdot)]$ to j, $\forall j \in S_i$
21: $\ell_i \leftarrow \sum_{j \in S_i} H_i^{(T)}[f_{ij}]$, send ℓ_i to $j' \in S_i$
22: **When** RECEIVE embedding $\bar{H}^{(t_j)}$ from $j \in P_i$:
23: $Cache_i[t_j][j] \leftarrow \bar{H}^{(t_j)}$
24: **if** $|Cache_i[t_i]| = |P_i|$ **then**
25: **for all** $j' \in P_i$ **do**
26: $H_i^{(t_i)}[f_{ij'}(\cdot,\cdot)] \leftarrow Cache[t_i][j']$
27: $t_i \leftarrow t_i + 1$
28: $H^{(t_i)} \leftarrow \mathcal{M}_{\theta,(t_i)}(H^{(t_i-1)})$
29: **if** $t_i < T$ **then**
30: send $H_i^{(t_i)}[f_{ij'}(\cdot,\cdot)]$ to j', $\forall j' \in S_i$
31: **else**
32: $\ell_i \leftarrow \sum_{j'' \in S_i} H_i^{(T)}[f_{ij''}]$, send ℓ_i to $j' \in S_i$
33: **When** RECEIVE accum. embedding ℓ_j from $j \in P_i$:
34: **if** $x_i \neq x_m$ **then**
35: send ℓ_j to $j' \in S_i$
36: **else**
37: $\ell_i \leftarrow \textsc{Add}(\ell_i, \ell_j)$
38: **if** all accum. embeddings have arrived **then**
39: computes Eq. (6)

cursors. Taking the tripartite graph in Fig. 1(d) as an example, x_2 maintains embeddings for $\langle x_2, R\rangle$, $f_{12}(R,R)$, f_{12}, $f_{23}(R,R)$ and $f_{23}(R,L)$. To update its local embeddings for $\langle x_2, R\rangle$, $f_{12}(R,R)$ and f_{12}, x_2 only needs one step of model inference after receiving the latest embedding of constraint-cost nodes $f_{23}(R,R)$ and $f_{23}(R,L)$ from its precursor x_3.

Next, we give details about the schema. First, we use primitive STACK to concatenate the initial features of local nodes[1] to construct the initial embeddings $H_i^{(0)}$ (line 3-13). After that, agent i computes its first round embeddings and sends the updated embeddings of constraint-cost nodes to each of its successors (line 14-15). If agent i is a source node, i.e., $P_i = \emptyset$, it directly updates the subsequent embeddings and sends the constraint-cost node embeddings at each timestep to its successors (line 16-20) since it does not need to wait for the embeddings from its precursors. Besides, the agent also sends the local accumulated function node embedding ℓ_i to one of its successors (line 21).

After receiving the constraint-cost node embeddings from its precursor j, agent i temporarily stores the embeddings to $Cache_i$ according to the timestamp t_j (line 23). If all the precursors' constraint-cost node embeddings for the t_i-th layer have arrived, agent i updates the local embedding $H_i^{(t_i)}$ with those embeddings stored in $Cache_i[t_i]$ (line 24-26). Then the agent computes the embeddings $H_i^{(t_i+1)}$ and sends the up-to-date embeddings to its successors (line 27-30). If all GAT layers are exhausted, the agent computes the local accumulated function node embedding ℓ_i and sends it to one of its successors (line 31-32). After receiving an accumulated function-node embedding, agent i either directly forwards the embedding to one of its successors or adds to its own accumulated function-node embedding, depending on whether it is the target agent (line 34-37). After received the accumulated embedding messages of all the other agents, the target agent m outputs the predicted optimal cost by

$$\hat{c}_m = \mathcal{M}_{\theta,(T+1)}(H_m^{(T)}[\langle x_m, d_m\rangle] \oplus \ell_m), \tag{6}$$

where $H_m^{(T)}[\langle x_m, d_m\rangle]$ is the embedding for variable-assignment node $\langle x_m, d_m\rangle$ in $H_m^{(T)}$ (line 38-39).

We now show the soundness and complexity of DES. We first show that DES results in the same embeddings as its centralized counterpart.

Lemma 1. *In DES, each agent i with $P_i \neq \emptyset$ receives exactly $T-1$ constraint-cost node embedding messages from $j, \forall j \in P_i$, one for each timestep $t_j = 1, \ldots, T-1$.*

Proof. Consider the base case where all the precursors are source i.e., $P_j = \emptyset, \forall j \in P_i$. Since it cannot receive a embedding from other agent, each precursor j sends exactly $T-1$ constraint-cost node embeddings to i, one for each timestep $t_j = 1, \ldots, T-1$ according to line 15, 19-20.

Assume that the lemma holds for all $j \in P_i$ with $P_j \neq \emptyset$. By assumption, the condition of line 24 holds for $t_j = 1, \ldots, T-1$ and hence precursor j sends embedding to i for $t_j = 2, \ldots, T-1$ (line 27-30). Together with the embedding sent in line 15, each precursor j sends $T-1$ constraint-cost node embedding messages to i in total, one for each timestep $t_j = 1, \ldots, T-1$, which concludes the lemma. □

Lemma 2. *For any agent i and timestep $t = 1, \ldots, T$, after performing DES, its local embeddings are the same as the ones in $H^{(t)}$. I.e., $H_i^{(t)}[\langle x_i, d_i\rangle] = H^{(t)}[\langle x_i, d_i\rangle]$, $H_i^{(t)}[f_{ij}(d_i, d_j)] = H^{(t)}[f_{ij}(d_i, d_j)]$, $H_i^{(t)}[f_{ij}] = H^{(t)}[f_{ij}]$, $\forall d_i \in D_i, x_j \in S_i, d_j \in D_j$.*

Proof. We only show the proof for variable-assignment nodes. Similar argument can be applied to constraint-cost nodes and function nodes.

[1] We omit unary functions for simplicity.

In the first timestep, i.e., $t = 1$, for each node $\langle x_i, d_i \rangle$, Eq. (3) computes $H^{(1)}[\langle x_i, d_i \rangle]$ based on the initial feature $H^{(0)}[f_{ij}(d_i, d_j)], \forall j \in P_i, d_j \in D_j$, which is the same as in DES, i.e., line 11-14.

Assume that the lemma holds for $t > 1$. Before computing the embeddings for $(t+1)$-th timestep, agent i must have received the embedding $H_j^{(t)}[f_{ij}(d_i, d_j)]$, which equals to $H^{(t)}[f_{ij}(d_i, d_j)]$ according to the assumption, from $j, \forall j \in P_i, d_i \in D_i, d_j \in D_j$ (line 20, 30 23-26, Lemma 1). Therefore, agent i computes $H_i^{(t+1)}[\langle x_i, d_i \rangle]$ according to $H^{(t)}[f_{ij}(d_i, d_j)], \forall j \in P_i, d_j \in D_j$, which is equivalent to Eq. (3)). Consequently, $H_i^{(t+1)}[\langle x_i, d_i \rangle] = H^{(t+1)}[\langle x_i, d_i \rangle]$ and the lemma holds by induction. □

Lemma 3. *For target agent m, after performing DES, $\ell_m = \sum_{v_i \in V_F} h_i^{(T)}$.*

Proof. We prove the lemma by showing each agent sends exactly one accumulated embedding message w.r.t. its local function nodes to one of its successors (i.e., line 21 and 32). It is trivial for the agents without precursor since they do not receive any message (line 28) and only send one accumulated embedding message by the end of procedure INITIALIZATION (line 21).

Consider an agent i with $P_i \neq \emptyset$. According to Lemma 1, i executes line 27-32 for $T - 1$ times. Given the initial value of 1 (line 14), t_i will eventually equal to T, implying line 32 will be executed only once. Since it does not perform line 21, i sends exactly one accumulated embedding message w.r.t. its local function nodes.

Since by construction each agent in the DAG has a path to the target agent m, all the accumulated embeddings will be forwarded to m (line 34-37). Therefore, by Lemma 2,

$$\ell_m = \sum_{i \in I} \sum_{j \in S_i} H_i^{(T)}[f_{ij}] = \sum_{i \in I} \sum_{j \in S_i} H^{(T)}[f_{ij}].$$

Note that $\forall f_{ij} \in F$, it must be either the case $j \in S_i$ if $i \prec j$ or the case $i \in S_j$ if $j \prec i$ in the DAG. Hence,

$$\ell_m = \sum_{i \in I} \sum_{j \in S_i} H^{(T)}[f_{ij}] = \sum_{f_{ij} \in F} H^{(T)}[f_{ij}] = \sum_{v_i \in V_F} h_i^{(T)}.$$

□

Then we show the soundness of our DES as follows:

Proposition 1. *DES is sound, i.e., Eq. (6) returns the same result as Eq. (4).*

Proof. According to the Lemma 2 and Lemma 3, by the end of DES, the target agent has the same variable-assignment embedding and accumulated function node embedding as the ones computed by Eq. (3). Therefore, Eq. (6) is equivalent to Eq. (4). □

Finally, we show the complexity of our DES as follows:

Proposition 2. *Each agent in DES requires T steps of model inference, $O(|I|d^2)$ spaces, and communicates $O(T|I|d^2)$ information.*

Proof. By line 14, 27-28 and Lemma 1, each agent performs T times of model inference. Each agent i needs to maintain embedding for $O(d)$ assignment-variable nodes (line 4-6), $O(|S_i|d^2) + |P_i|d^2)$ constraint-cost nodes (line 7, 9-13), and $O(|S_i|)$ function nodes (line 8). Since in the worst case, the agent is constrained with all the other $|I| - 1$ agents, i's space complexity is $O(|I|d^2)$. Finally, since for each timestep $t_i = 1, \ldots, T - 1$ agent i sends the constraint-cost node embeddings to its successors, its communication overhead is $O(T|S_i|d^2) = O(T|I|d^2)$. □

GAT-PCM as Heuristics Since our model GAT-PCM predicts the optimal cost of a target assignment given a partial assignment, it can serve as a general heuristic to boost the performance of a wide range of DCOP algorithms where the core operation is to evaluate the quality of an assignment. We consider two kinds of well-known algorithms and show how our model can boost them as follows:

- Local search. A key task in local search is to find good assignments for a set of variables given the other variables' assignments. For example, in Distributed Large Neighborhood Search (DLNS) (Hoang et al. 2018) , each round a subroutine is called to solve a subproblem induced by the destroyed variables (also called repair phase). Currently, DPOP (Petcu and Faltings 2005) is used to solve a tree-structured relaxation of the subproblem, which ignores a large proportion of constraints and thus leads to poor performance on general problems. Instead, we use our GAT-PCM to solve the subproblem without relaxation (i.e., all constraints between all pairs of destroyed variables are included) since the overhead is polynomial in the number of agents (cf. Proposition 2). Specifically, for each connected subproblem, we assume a variable ordering (e.g., lexicographical ordering, pseudo tree). Then we greedily assign each variable according to the costs predicted by GAT-PCM, i.e., we select an assignment with the smallest predicted cost for each variable.
- Backtracking search. Domain ordering is another important task in backtracking search for DCOPs. Previously, domain ordering utilizes local information only, e.g., prioritizing the assignment with minimum conflicts w.r.t. each unassigned variable (Frost and Dechter 1995) or querying a lower bound lookup table. On the other hand, our GAT-PCM offers a more general and systematic way for domain ordering. Specifically, for an unassigned variable, we could query GAT-PCM for the optimal cost of each assignment under the current partial assignment and give the priority to the one with minimum predicted cost.

Empirical Evaluation

In this section, we perform extensive empirical studies. We begin with introducing the details of experiments and pre-training stage. Then we analyze the results and demonstrate the capability of our GAT-PCM to boost DCOP algorithms.

Benchmarks We consider four types of benchmarks in our experiments, i.e., random DCOPs, scale-free networks, grid networks, and weighted graph coloring problems. For

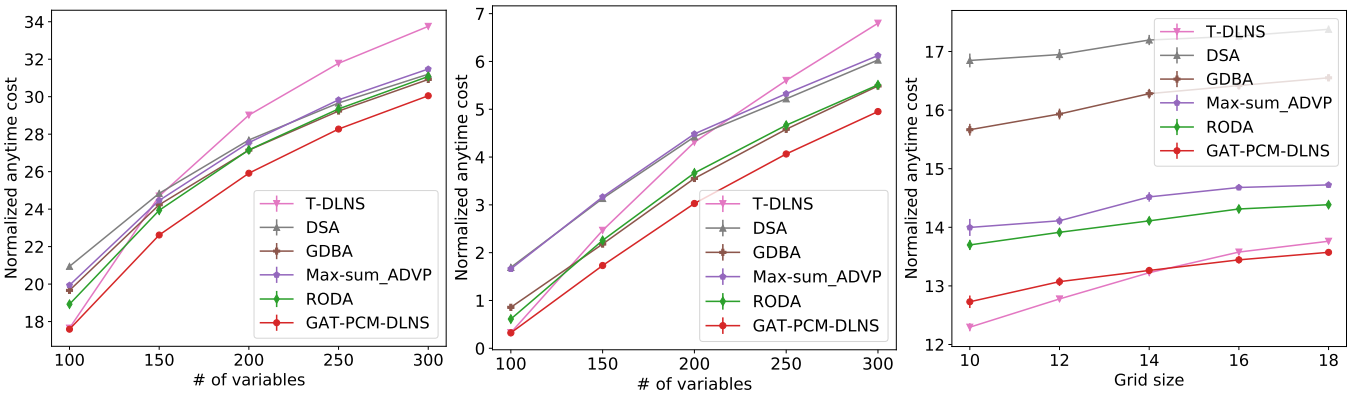

(a) $p_1 = 0.05$, $d = 10$ (b) $p_1 = 0.05$, $d = 3$ (c) $d = 10$

Figure 2: Solution quality comparisons: (a) random DCOPs; (b) weighted graph coloring problems; (c) grid networks

random DCOPs and weighted graph coloring problems, given density of $p_1 \in (0, 1)$, we randomly create a constraint for a pair of variables with probability p_1. For scale-free networks, we use the BA model (Barabási and Albert 1999) with parameter m_0 and m_1 to generate constraint relations: starting from a connected graph with m_0 vertices, a new vertex is connected to m_1 vertices with a probability which is proportional to the degree of each existing vertex in each iteration. Besides, variables in a grid network are arranged into a 2D grid, where each variable is constrained with four neighboring variables excepts the ones located at the boundary. Finally, for each constraint in random DCOPs, scale-free networks and grid networks, we uniformly sample a cost from $[0, 100]$ for each pair of variable-assignments. Differently, constraints of the weighted graph coloring problems incur a cost which is also uniformly sampled from $[0, 100]$ if two constrained variables have the same assignment.

Baselines We consider four types of baselines: local search, belief propagation, region optimal method, and large neighborhood search. We use DSA (Zhang et al. 2005) with $p = 0.8$ and GDBA (Okamoto, Zivan, and Nahon 2016) with $\langle M, NM, T \rangle$ as two representative local search methods, Max-sum_ADVP (Zivan et al. 2017) as a representative belief propagation method, RODA (Grinshpoun et al. 2019) with $t = 2, k = 3$ as a representative region optimal method, and T-DLNS (Hoang et al. 2018) with destroy probability $p = 0.5$ as a representative large neighborhood search method.

All experiments are conducted on an Intel i9-9820X workstation with GeForce RTX 3090 GPUs. For each data point, we average the results over 50 instances and report standard error of the mean (SEM) as confidence intervals.

Implementation and Hyperparameters Our GAT-PCM model has four GAT layers (i.e., $T = 4$). Each layer in the first three layers has 8 output channels and 8 heads of attention, while the last layer has 16 output channels and 4 heads of attention. Each GAT layer uses `ELU` (Clevert, Unterthiner, and Hochreiter 2016) as the activation function. In the pretraining stage, we consider a random DCOP distribution with $|I| \in [15, 30]$, $d \in [3, 15]$ and $p_1 \in [0.1, 0.4]$.

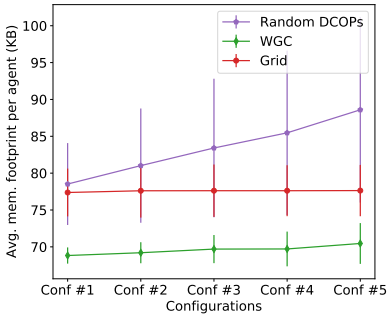

Figure 3: Memory footprint of GAT-PCM-DLNS

Finally, we use DPOP (Petcu and Faltings 2005) to generate the optimal cost labels.

For hyperparameters, we set the batch size and the number of training epochs to be 64 and 5000, respectively. Our model was implemented with the PyTorch Geometric framework (Fey and Lenssen 2019) and the model was trained with the Adam optimizer (Kingma and Ba 2014) using the learning rate of 0.0001 and a 5×10^{-5} weight decay ratio.

Results In the first set of experiments, we evaluate the performance of our GAT-PCM when combined with the DLNS framework, which we name it GAT-PCM-DLNS, in solving large-scale DCOPs. We run GAT-PCM-DLNS with destroy probability of 0.2 for 1000 iterations and report the normalized anytime cost (i.e., the best solution cost divided by the number of constraints) as the result. Fig. 2 presents the results of solution quality where all baselines run for the same simulated runtime as GAT-PCM-DLNS. It can be seen that DSA explores low-quality solutions since it iteratively approaches a Nash equilibrium, resulting in 1-opt solutions similar to Max-sum_ADVP. GDBA improves by increasing the weights when agents get trapped in quasi-local minima. RODA finds solutions better than 1-opt by coordinating the variables in a coalition of size 3. T-DLNS, on the other hand, tries to optimize by optimally solving a tree-structured relaxation of the subproblem induced by the destroyed variables in each round. However, T-DLNS could ig-

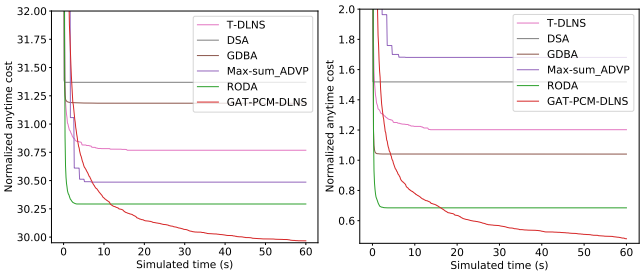

(a) random DCOPs (b) weighted graph coloring

Figure 4: Convergence analysis

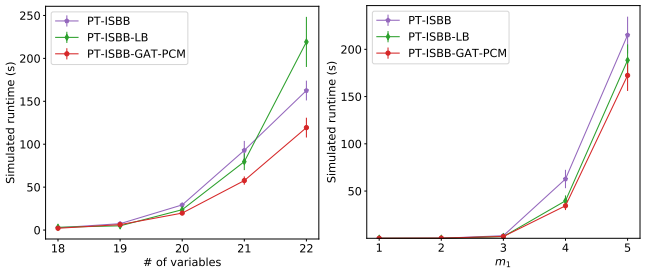

(a) random DCOPs (b) scale-free networks

Figure 5: Runtime comparison on the problems with $d = 5$

nore a large proportion of constraints and therefore perform poorly when solving complex problems (e.g., the problems with more than 200 variables). Differently, our GAT-PCM-DLNS solves the induced subproblem without relaxation, leading to a significant improvement over the state-of-the-arts when solving unstructured problems (i.e., Fig. 2(a-b)). Interestingly, T-DLNS achieves the best performance when solving small grid networks. That is because the variables in the problem are under-constrained and T-DLNS only needs to drop few edges to obtain a tree-structured problem. In fact, the average degree in these problems is less than 3.8. However, our GAT-PCM-DLNS still outperforms T-DLNS when the grid size is higher than 14.

We display the average memory footprint per agent of GAT-PCM-DLNS in the first set of experiments in Fig 3, where "Conf #1" to "Conf #5" refer the growing complexity of each experiment. Specifically, the memory overhead of each agent consists of two parts, i.e., storing the pretrained model and local embeddings. The former consumes about 60KB memory, while the latter requires space proportional to the number of agents and the size of each constraint matrix (cf. Prop. 2). It can be concluded that our method has a modest memory requirement and scales up to large instances well in various settings. In particular, our method has a (nearly) constant memory footprint when solving grid network problems since each agent is constrained with at most four other agents regardless of the grid size.

To investigate how fast our GAT-PCM-DLNS finds a good solution, we conduct a convergence analysis which measures the performance in terms of simulated time (Sultanik, Lass, and Regli 2008) on the problems with $|I| = 1000, p_1 = 0.005$ and $d = 3$ and present the results in Fig. 4. It can be seen that local search algorithms including DSA and GDBA quickly converge to a poor local optimum, while RODA finds a better solution in the first three seconds. T-DLNS slowly improves the solution but is strictly dominated by RODA. In contrast, our GAT-PCM-DLNS improves much steadily, outperforming all baselines after 18 seconds.

Finally, we demonstrate the merit of our GAT-PCM in accelerating backtracking search for random DCOPs with $p_1 = 0.25$ and scale-free networks with $|I| = 18, m_0 = 5$ by conducting a case study on the symmetric version of PT-ISABB (Deng et al. 2019) (referred as PT-ISBB) and present the results in Fig. 5. Specifically, we set the memory budget $k = 2$ and compare the simulated runtime of PT-ISBB using three domain ordering generation techniques: alphabetically, lower bound lookup tables (PT-ISBB-LB), and our GAT-PCM (PT-ISBB-GAT-PCM). For PT-ISBB-GAT-PCM, we only perform domain ordering for the variables in the first three levels in a pseudo tree. It can be observed that the backtracking search with alphabetic domain ordering performs poorly and is dominated by the one with the lower bound induced domain ordering in the most cases. Notably, when solving the problems with 22 variables, PT-ISBB-LB exhibits the worst performance, because the lower bounds generated by approximated inference are not tight in complex problems, and hence the induced domain ordering may not prioritize promising assignments properly. On the other hand, our GAT-PCM powered backtracking search uses the predicted total cost of a subproblem as the criterion, resulting in a more efficient domain ordering and thus achieving the best results in solving complex problems.

Conclusion

In this paper, we present GAT-PCM, the first effective and general purpose deep pretrained model for DCOPs. We propose a novel directed acyclic graph representation schema for DCOPs and leverage the Graph Attention Networks (GATs) to embed our graph representations. Instead of generating heuristics for a particular algorithm, we train the model with optimally labelled data to predict the optimal cost of a target assignment given a partial assignment, such that GAT-PCM can be applied to boost the performance of a wide range of DCOP algorithms where evaluating the quality of an assignment is critical. To enable efficient graph embedding in a distributed environment, we propose DES to perform decentralized model inference without disclosing local constraints, where each agent exchanges only the embedded vectors via localized communication. Finally, we develop several heuristics based on GAT-PCM to improve local search and backtracking search algorithms. Extensive empirical evaluations confirm the superiority of GAT-PCM based algorithms over the state-of-the-arts.

In future, we plan to extend GAT-PCM to deal with the problems with higher-arity constraints and hard constraints. Besides, since agents in DES exchange the embedded vectors instead of constraint costs, it is promising to extend our methods to an asymmetric setting (Grinshpoun et al. 2013).

Acknowledgement

This research was supported by the National Research Foundation, Singapore under its AI Singapore Programme (AISG Award No: AISG-RP-2019-0013), National Satellite of Excellence in Trustworthy Software Systems (Award No: NSOE-TSS2019-01), and NTU.

References

Barabási, A.-L.; and Albert, R. 1999. Emergence of scaling in random networks. *Science*, 286(5439): 509–512.

Bengio, Y.; Lodi, A.; and Prouvost, A. 2021. Machine Learning for combinatorial optimization: A methodological tour d'horizon. *European Journal of Operational Research*, 290(2): 405–421.

Brown, T. B.; Mann, B.; Ryder, N.; Subbiah, M.; Kaplan, J.; Dhariwal, P.; Neelakantan, A.; Shyam, P.; Sastry, G.; Askell, A.; et al. 2020. Language models are few-shot learners. *arXiv preprint arXiv:2005.14165*.

Chen, Z.; Deng, Y.; Wu, T.; and He, Z. 2018. A class of iterative refined Max-sum algorithms via non-consecutive value propagation strategies. *Autonomous Agents and Multi-Agent Systems*, 32(6): 822–860.

Chen, Z.; Zhang, W.; Deng, Y.; Chen, D.; and Li, Q. 2020. RMB-DPOP: Refining MB-DPOP by reducing redundant inference. In *AAMAS*, 249–257.

Clevert, D.; Unterthiner, T.; and Hochreiter, S. 2016. Fast and accurate deep network learning by exponential linear units (ELUs). In *ICLR*.

Cohen, L.; Galiki, R.; and Zivan, R. 2020. Governing convergence of Max-sum on DCOPs through damping and splitting. *Artificial Intelligence*, 279: 103212.

Dechter, R. 1998. Bucket elimination: A unifying framework for probabilistic inference. In *Learning in Graphical Models*, volume 89 of *NATO ASI Series*, 75–104. Springer.

Deng, Y.; Chen, Z.; Chen, D.; Jiang, X.; and Li, Q. 2019. PT-ISABB: A hybrid tree-based complete algorithm to solve asymmetric distributed constraint optimization problems. In *AAMAS*, 1506–1514.

Deng, Y.; Yu, R.; Wang, X.; and An, B. 2021. Neural regret-matching for distributed constraint optimization problems. In *IJCAI*, 146–153.

Devlin, J.; Chang, M.-W.; Lee, K.; and Toutanova, K. 2018. BERT: Pre-training of deep bidirectional transformers for language understanding. *arXiv preprint arXiv:1810.04805*.

Eén, N.; and Sörensson, N. 2003. An extensible SAT-solver. In *International conference on theory and applications of satisfiability testing*, 502–518.

Farinelli, A.; Rogers, A.; Petcu, A.; and Jennings, N. R. 2008. Decentralised coordination of low-power embedded devices using the Max-sum algorithm. In *AAMAS*, 639–646.

Fey, M.; and Lenssen, J. E. 2019. Fast graph representation learning with PyTorch Geometric. In *ICLR Workshop on Representation Learning on Graphs and Manifolds*.

Fioretto, F.; Yeoh, W.; Pontelli, E.; Ma, Y.; and Ranade, S. J. 2017. A distributed constraint optimization (DCOP) approach to the economic dispatch with demand response. In *AAMAS*, 999–1007.

Freuder, E. C.; and Quinn, M. J. 1985. Taking advantage of stable sets of variables in constraint satisfaction problems. In *IJCAI*, 1076–1078.

Frost, D.; and Dechter, R. 1995. Look-ahead value ordering for constraint satisfaction problems. In *IJCAI*, 572–578.

Gasse, M.; Chételat, D.; Ferroni, N.; Charlin, L.; and Lodi, A. 2019. Exact combinatorial optimization with graph convolutional neural networks. In *NeurIPS*, 15554–15566.

Grinshpoun, T.; Grubshtein, A.; Zivan, R.; Netzer, A.; and Meisels, A. 2013. Asymmetric distributed constraint optimization problems. *Journal of Artificial Intelligence Research*, 47: 613–647.

Grinshpoun, T.; Tassa, T.; Levit, V.; and Zivan, R. 2019. Privacy preserving region optimal algorithms for symmetric and asymmetric DCOPs. *Artificial Intelligence*, 266: 27–50.

He, K.; Zhang, X.; Ren, S.; and Sun, J. 2016. Deep residual learning for image recognition. In *CVPR*, 770–778.

Hirayama, K.; Miyake, K.; Shiotani, T.; and Okimoto, T. 2019. DSSA+: Distributed collision avoidance algorithm in an environment where both course and speed changes are allowed. *International Journal on Marine Navigation and Safety of Sea Transportation*, 13(1): 117–123.

Hirayama, K.; and Yokoo, M. 1997. Distributed partial constraint satisfaction problem. In *CP*, 222–236.

Hoang, K. D.; Fioretto, F.; Yeoh, W.; Pontelli, E.; and Zivan, R. 2018. A large neighboring search schema for multi-agent optimization. In *CP*, 688–706.

Hochreiter, S.; and Schmidhuber, J. 1997. Long short-term memory. *Neural computation*, 9(8): 1735–1780.

Jégou, P. 1993. Decomposition of domains based on the micro-structure of finite constraint-satisfaction problems. In *AAAI*, 731–736.

Kingma, D. P.; and Ba, J. 2014. Adam: A method for stochastic optimization. *arXiv preprint arXiv:1412.6980*.

Krizhevsky, A.; Sutskever, I.; and Hinton, G. E. 2017. ImageNet classification with deep convolutional neural networks. *Communications of the ACM*, 60(6): 84–90.

Kurin, V.; Godil, S.; Whiteson, S.; and Catanzaro, B. 2020. Can Q-Learning with graph networks learn a generalizable branching heuristic for a SAT solver? *NeurIPS*, 9608–9621.

LeCun, Y.; Boser, B. E.; Denker, J. S.; Henderson, D.; Howard, R. E.; Hubbard, W. E.; and Jackel, L. D. 1989. Handwritten digit recognition with a back-propagation network. In *NeurIPS*, 396–404.

Lederman, G.; Rabe, M.; Seshia, S.; and Lee, E. A. 2020. Learning heuristics for quantified boolean formulas through reinforcement learning. In *ICLR*.

Li, G.; Muller, M.; Thabet, A.; and Ghanem, B. 2019. DeepGCNs: Can GCNs go as deep as CNNs? In *ICCV*, 9267–9276.

Litov, O.; and Meisels, A. 2017. Forward bounding on pseudo-trees for DCOPs and ADCOPs. *Artificial Intelligence*, 252: 83–99.

Maheswaran, R. T.; Pearce, J. P.; and Tambe, M. 2004. Distributed algorithms for DCOP: A graphical-game-based approach. In *ISCA PDCS*, 432–439.

Mnih, V.; Kavukcuoglu, K.; Silver, D.; et al. 2015. Human-level control through deep reinforcement learning. *Nature*, 518(7540): 529–533.

Modi, P. J.; Shen, W.-M.; Tambe, M.; and Yokoo, M. 2005. Adopt: Asynchronous distributed constraint optimization with quality guarantees. *Artificial Intelligence*, 161(1-2): 149–180.

Monteiro, T. L.; Pujolle, G.; Pellenz, M. E.; Penna, M. C.; and Souza, R. D. 2012. A multi-agent approach to optimal channel assignment in WLANs. In *WCNC*, 2637–2642.

Nguyen, D. T.; Yeoh, W.; Lau, H. C.; and Zivan, R. 2019. Distributed Gibbs: A linear-space sampling-based DCOP algorithm. *Journal of Artificial Intelligence Research*, 64: 705–748.

Okamoto, S.; Zivan, R.; and Nahon, A. 2016. Distributed breakout: Beyond satisfaction. In *IJCAI*, 447–453.

Ottens, B.; Dimitrakakis, C.; and Faltings, B. 2017. DUCT: An upper confidence bound approach to distributed constraint optimization problems. *ACM Transactions on Intelligent Systems and Technology*, 8(5): 69:1–69:27.

Petcu, A.; and Faltings, B. 2005. A scalable method for multiagent constraint optimization. In *IJCAI*, 266–271.

Petcu, A.; and Faltings, B. 2007. MB-DPOP: A new memory-bounded algorithm for distributed optimization. In *IJCAI*, 1452–1457.

Razeghi, Y.; Kask, K.; Lu, Y.; Baldi, P.; Agarwal, S.; and Dechter, R. 2021. Deep Bucket Elimination. In *IJCAI*, 4235–4242.

Rogers, A.; Farinelli, A.; Stranders, R.; and Jennings, N. R. 2011. Bounded approximate decentralised coordination via the max-sum algorithm. *Artificial Intelligence*, 175(2): 730–759.

Selsam, D.; Lamm, M.; Bünz, B.; Liang, P.; de Moura, L.; and Dill, D. L. 2019. Learning a SAT solver from single-bit supervision. In *ICLR*.

Simonyan, K.; and Zisserman, A. 2014. Very deep convolutional networks for large-scale image recognition. *arXiv preprint arXiv:1409.1556*.

Sultanik, E. A.; Lass, R. N.; and Regli, W. C. 2008. DCOPolis: A framework for simulating and deploying distributed constraint reasoning algorithms. In *AAMAS*, 1667–1668.

Vaswani, A.; Shazeer, N.; Parmar, N.; Uszkoreit, J.; Jones, L.; Gomez, A. N.; Kaiser, L.; and Polosukhin, I. 2017. Attention is all you need. *arXiv preprint arXiv:1706.03762*.

Veličković, P.; Cucurull, G.; Casanova, A.; Romero, A.; Lio, P.; and Bengio, Y. 2017. Graph attention networks. *arXiv preprint arXiv:1710.10903*.

Williams, R. J. 1992. Simple statistical gradient-following algorithms for connectionist reinforcement learning. *Machine Learning*, 8(3): 229–256.

Xu, H.; Koenig, S.; and Kumar, T. S. 2018. Towards effective deep learning for constraint satisfaction problems. In *CP*, 588–597.

Yeoh, W.; Felner, A.; and Koenig, S. 2010. BnB-ADOPT: An asynchronous branch-and-bound DCOP algorithm. *Journal of Artificial Intelligence Research*, 38: 85–133.

Yolcu, E.; and Póczos, B. 2019. Learning local search heuristics for boolean satisfiability. In *NeurIPS*, 7990–8001.

Zhang, W.; Wang, G.; Xing, Z.; and Wittenburg, L. 2005. Distributed stochastic search and distributed breakout: Properties, comparison and applications to constraint optimization problems in sensor networks. *Artificial Intelligence*, 161(1-2): 55–87.

Zivan, R.; Parash, T.; Cohen, L.; Peled, H.; and Okamoto, S. 2017. Balancing exploration and exploitation in incomplete min/max-sum inference for distributed constraint optimization. *Autonomous Agents and Multi-Agent Systems*, 31(5): 1165–1207.