KEYs

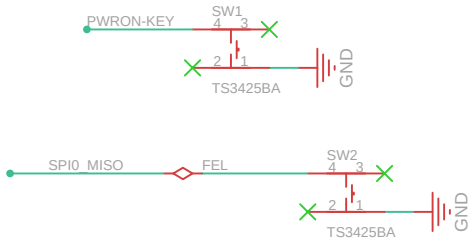

VSYS

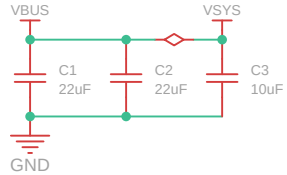

POWER TREE

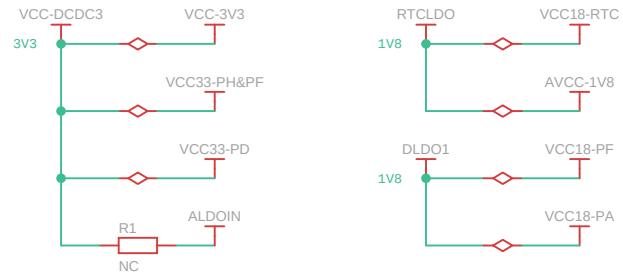

PMIC

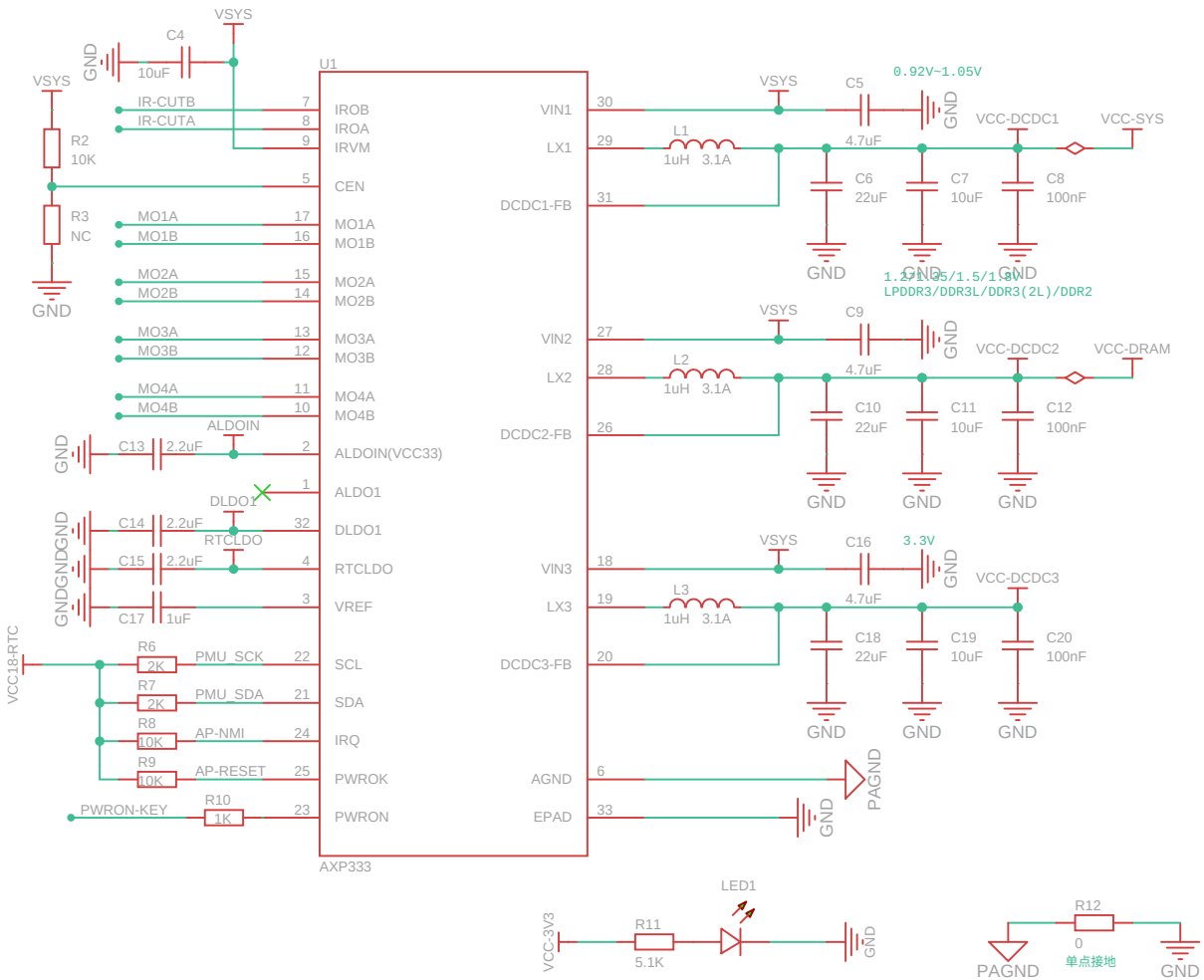

MOTOR

USB

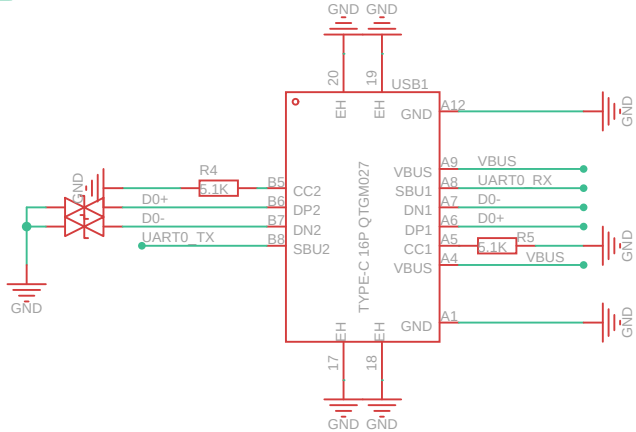

TITLE: Avaota F2

REV: 1.0

Company: YuzukiHD

Sheet: 1

Total: 2

Date: 2025-11-06

Drawn By: GloomyGhost

SoC

MIC

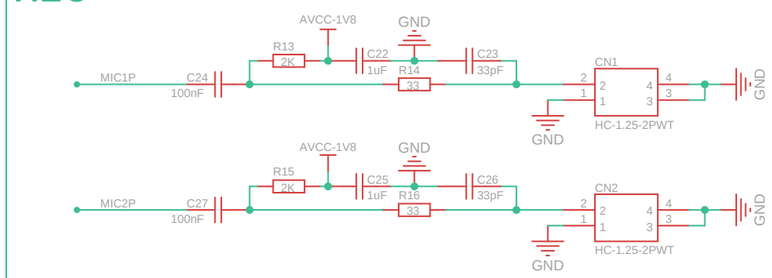

SPK

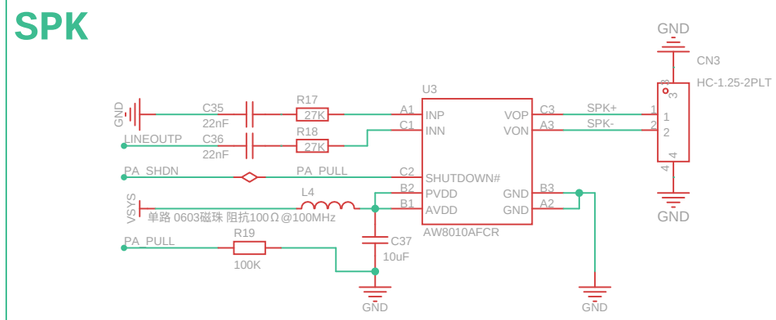

HOSC

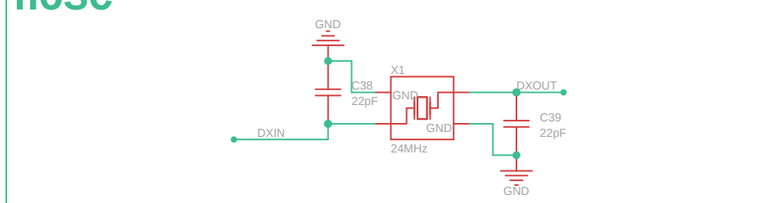

GPIO

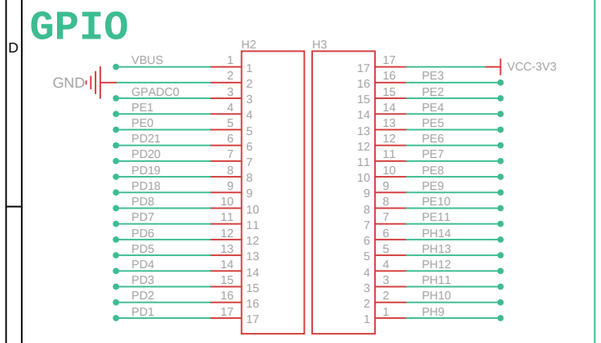

Caps

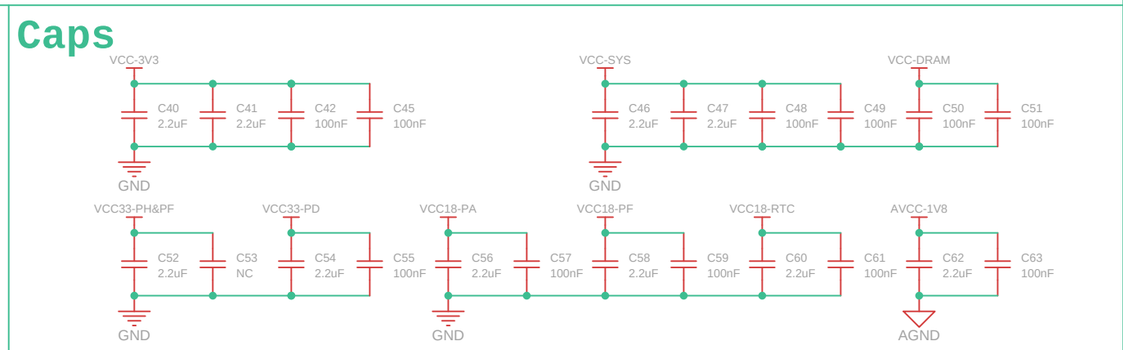

MCSI

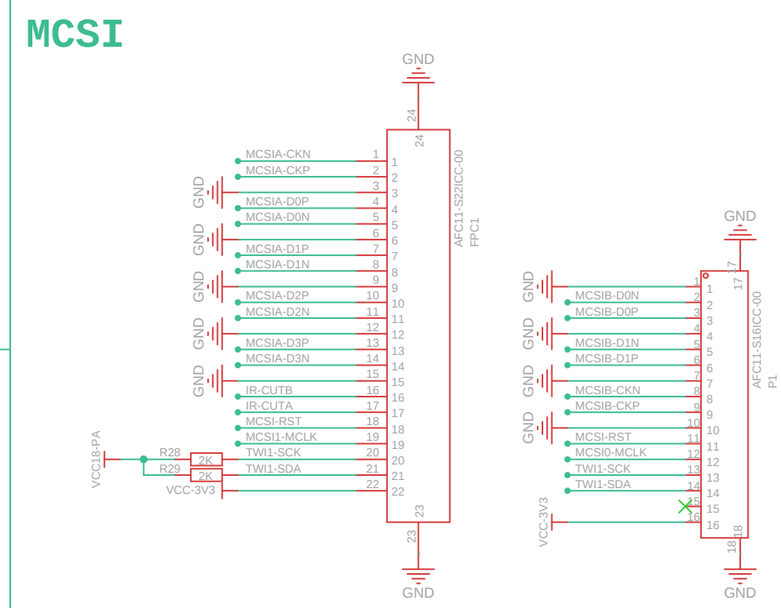

SPI NOR

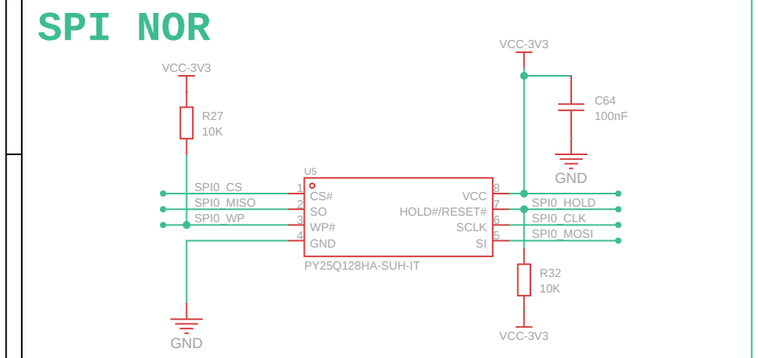

TF Card

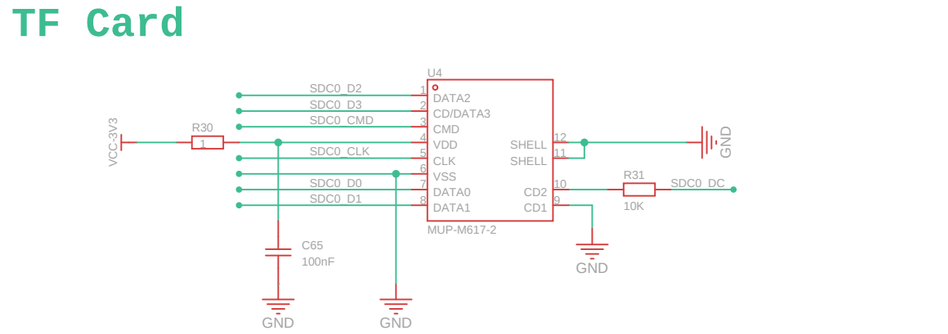

TITLE: Avaota F2			REV: 1.0
	Company: YuzukiHD	Sheet: 2	Total: 2
	Date: 2025-11-27	Drawn By: GloomyGhost	