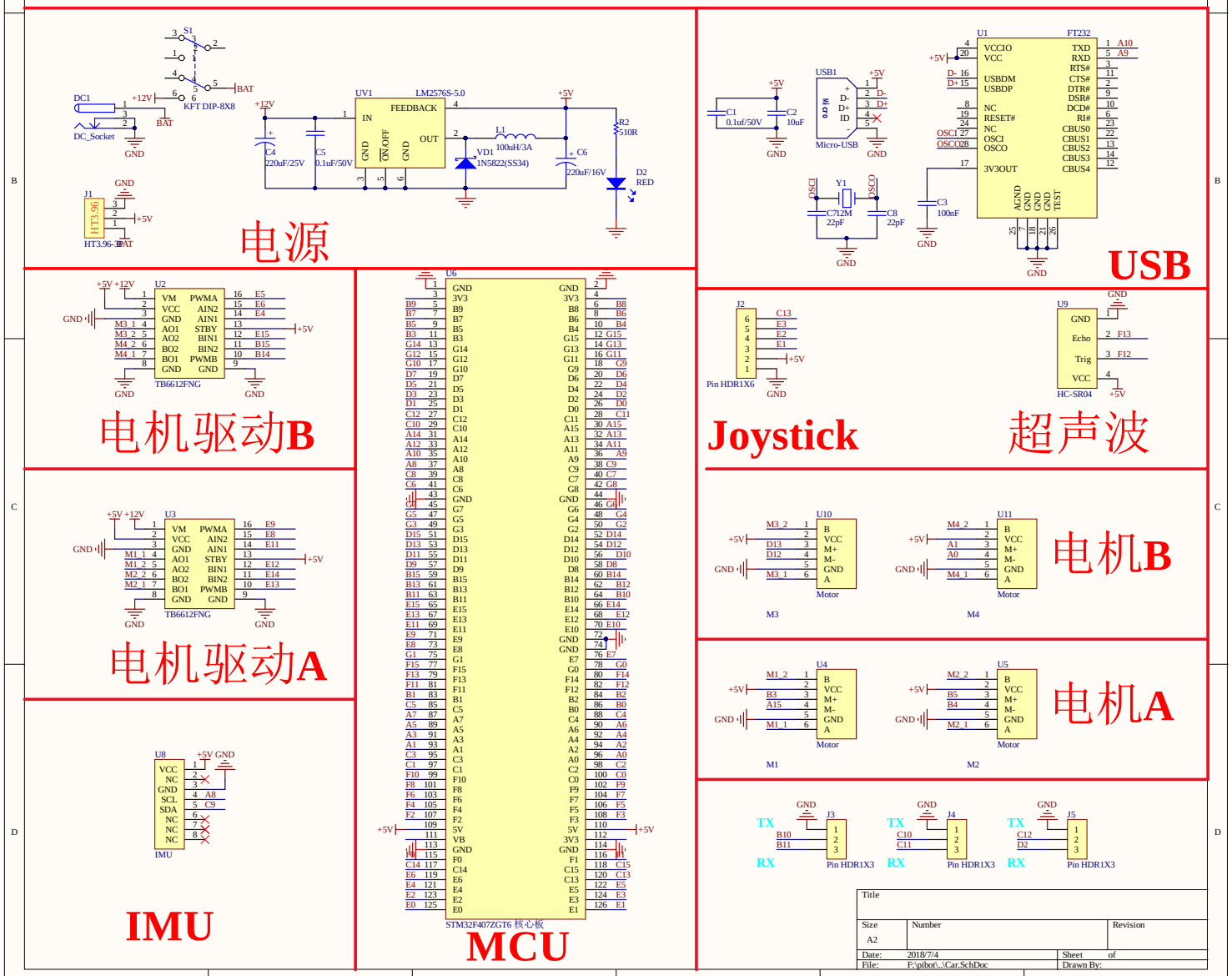
电源
LM2576S-5.0
FEEDBACK
KFT DIP-8X8
DC_Socket
HT3.96-3P
USB
FT232
Micro-USB
Joystick
超声波
HC-SR04
Pin HDR1X6
电机驱动B
TB6612FNG
电机驱动A
电机B
电机A
Motor
IMU
MCU
STM32F407ZGT6 核心板
Title
Size
A2
Number
Revision
Date: 2018/7/4
Sheet of
File: F:\pibot\..\Car.SchDoc
Drawn By: