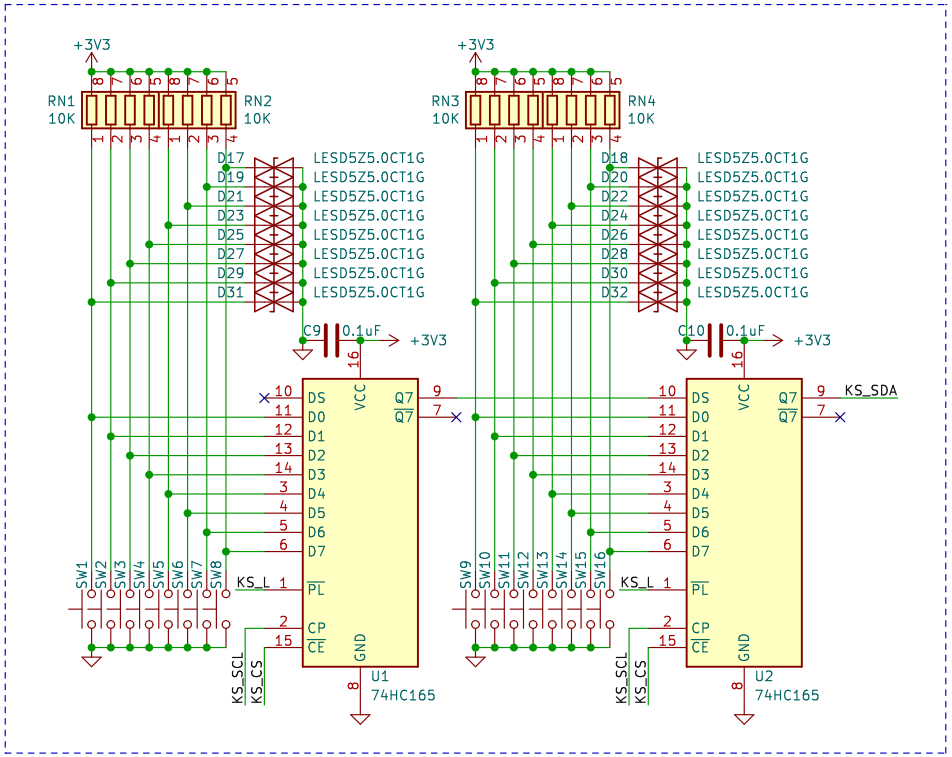

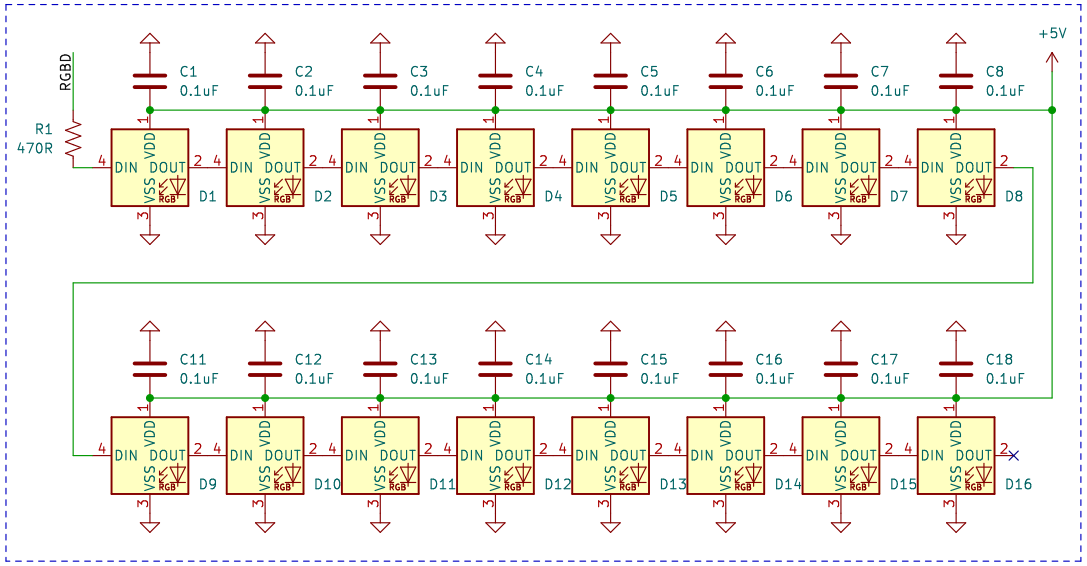

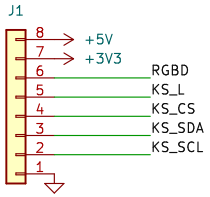

Sheet: /
File: MK74HC-16.kicad_sch

Title:

Size: A4	Date:	**Rev:**
KiCad E.D.A. kicad (6.0.8-1)-1		Id: 1/1