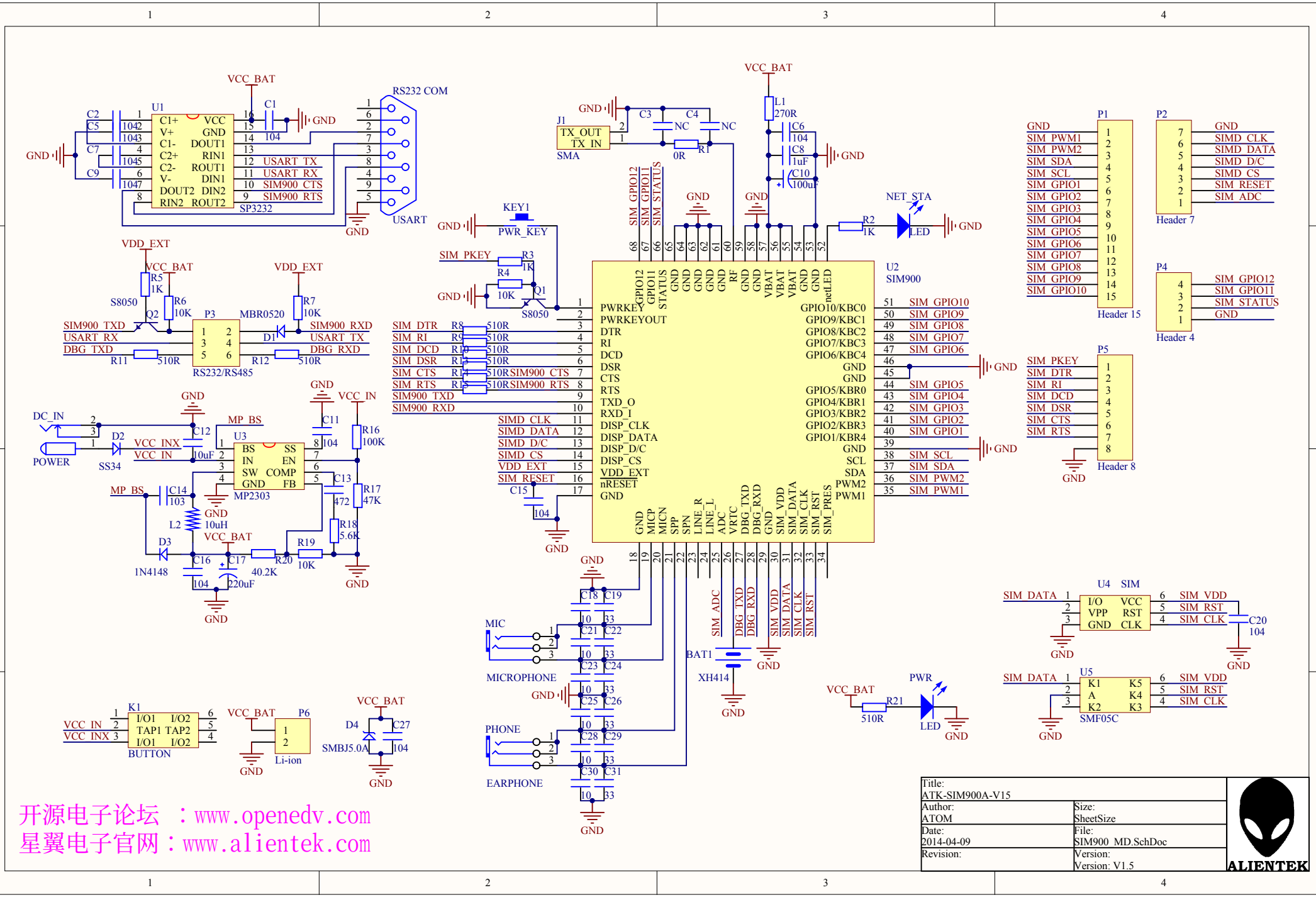

Title: ATK-SIM900A-V15	
Author: ATOM	Size: SheetSize
Date: 2014-04-09	File: SIM900_MD.SchDoc
Revision:	Version: Version: V1.5

ALIENTEK

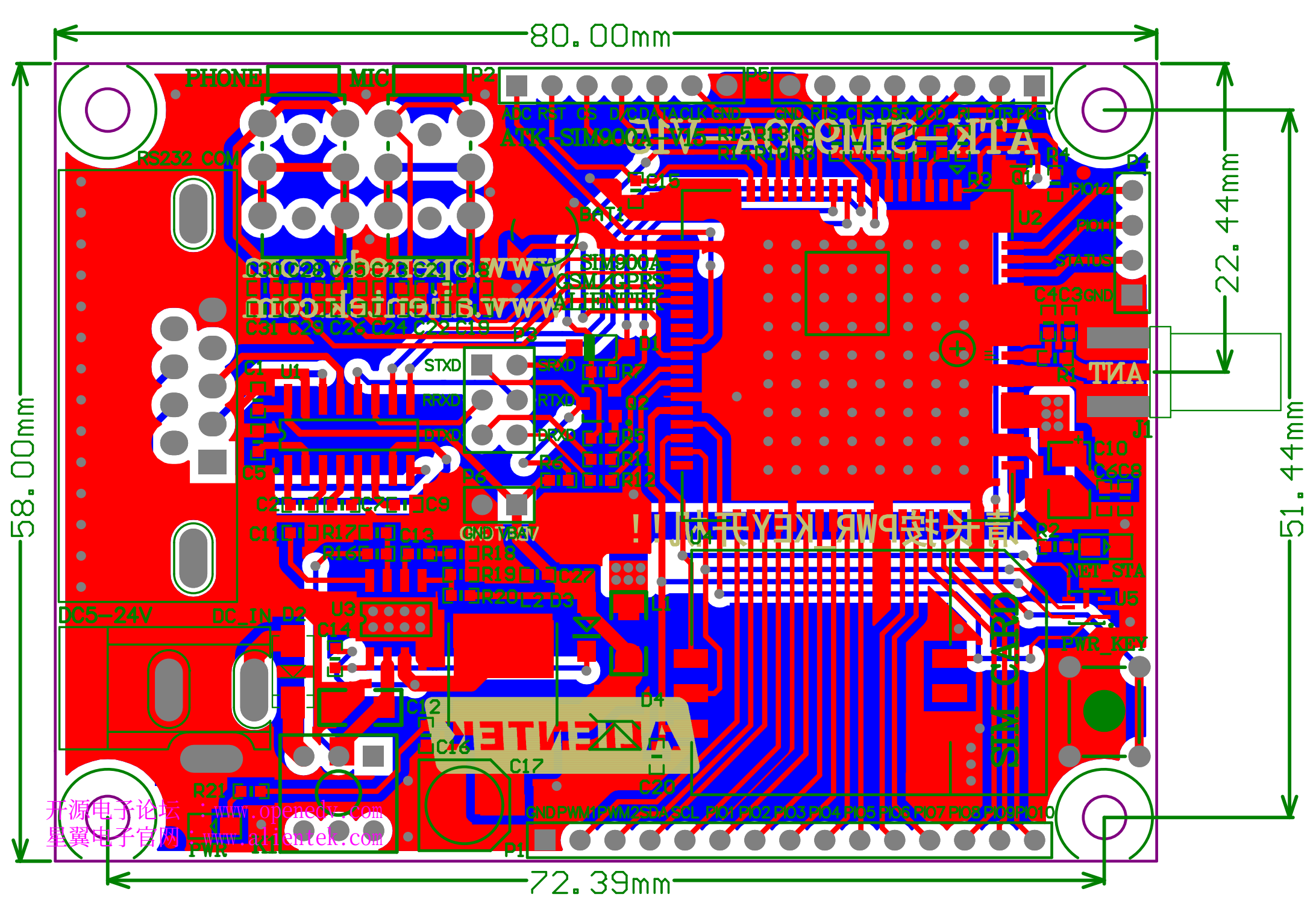
80.00mm
58.00mm
22.44mm
51.44mm
72.39mm
PHONE
MIC
P2
P5
P4
P1
P6
P3
RS232 COM
DC5-24V
DC_IN
D2
U3
U1
U2
U4
U5
J1
PWR
PWR_KEY
NET_STA
STATUS
STXD
RXD
RTXD
DTXD
DRXD
GND
VBAT
ATK-SIM900A
SIM900A
GSM/GPRS
MODULE
ALIENTEK
开源电子论坛 www.openedv.com
星翼电子官网 www.alientek.com