Displays 90 (2025) 103086

Contents lists available at ScienceDirect

Displays

journal homepage: www.elsevier.com/locate/displa

Review

Deep learning for endoscopic depth estimation: A review☆

Xiongzhi Wang [a,b], Boyu Yang [c], Min Wei [d], Liangfa Liu [e], Jingang Zhang [a,b,*], Yunfeng Nie [f,**]

[a] School of Aerospace Science And Technology, Xidian University, Xian 710071, China
[b] School of Future Technology, University of Chinese Academy of Sciences, Beijing 100039, China
[c] Department of Urology, Beijing Friendship Hospital, Capital Medical University, Beijing, 100050, China
[d] Department of Orthopedics, the Fourth Medical Center, Chinese PLA General Hospital, Beijing 100853, China
[e] Department of Orthopedics Head and Neck Surgery, Beijing Friendship Hospital, Capital Medical University, Beijing 100050, China
[f] Brussel Photonics, Department of Applied Physics and Photonics, Vrije Universiteit Brussel and Flanders Make, 1050 Brussels, Belgium

ARTICLE INFO

Keywords:
Depth estimation
Endoscopic surgery
Deep learning
Medical imaging
Surgical navigation

ABSTRACT

Depth estimation is a fundamental task in computer vision, crucial for applications such as endoscopic surgical navigation. This paper comprehensively reviews recent advancements in endoscopic depth estimation algorithms utilizing deep learning. We start by briefly describing the basic principles behind depth estimation and how depth maps can be generated from monocular and binocular cues. We then analyze the characteristics of the endoscopic dataset. Subsequently, we provide an overview of deep learning applications in endoscopic depth estimation, encompassing supervised, self-supervised, and semi-supervised learning methods. We examine each method's principles, advantages, and disadvantages and their performance in practical applications. Additionally, we summarize the performance of current deep learning methods in endoscopic depth estimation and explore the importance of model robustness and generalization capabilities. Finally, we propose potential future research directions, such as exploring methods for collecting high-quality data or using simulated data to overcome current dataset limitations, and developing lightweight models to enhance real-time performance and robustness. This study aims to offer a comprehensive review for researchers in the field of endoscopic depth estimation, thereby fostering further development in this area.

Contents

1. Introduction 2
2. Preliminaries 2
   2.1. Principle of depth estimation 2
   2.2. Endoscopic depth estimation datasets 3
   2.3. Measurement metrics 3
3. Deep learning techniques for endoscopic depth estimation 3
   3.1. Supervised learning methods 4
   3.2. Self-supervised learning methods 5
      3.2.1. Left–right consistency 6
      3.2.2. PoseCNN 6
   3.3. Semi-supervised learning methods 7
4. Performance comparison of deep learning methods 7
   4.1. Summary of experimental performance 7
   4.2. Comparison of model robustness 8
   4.3. Comparison across learning paradigms 8
5. Challenges and trends 9
   5.1. Dataset limitation 10
   5.2. Network architecture 10

☆ This paper was recommended for publication by Guangtao Zhai.

* Corresponding author at: School of Future Technology, University of Chinese Academy of Sciences, Beijing 100039, China.
** Corresponding author.
E-mail addresses: zhangjg@ucas.ac.cn (J. Zhang), Yunfeng.Nie@vub.be (Y. Nie).

https://doi.org/10.1016/j.displa.2025.103086
Received 26 December 2024; Received in revised form 19 April 2025; Accepted 12 May 2025
Available online 27 May 2025
0141-9382/© 2025 The Authors. Published by Elsevier B.V. This is an open access article under the CC BY license (http://creativecommons.org/licenses/by/4.0/).

5.3. Real-time performance 10
6. Conclusion 10
CRediT authorship contribution statement 10
Declaration of competing interest 10
Acknowledgments 10
Data availability 10
References 10

1. Introduction

Endoscopic minimally invasive surgery (MIS) presents numerous advantages over traditional open surgery, including reduced trauma and accelerated recovery [1]. However, unlike computer tomography (CT) or magnetic resonance imaging (MRI), which provide three-dimensional anatomical structures, endoscopic imaging typically produces two-dimensional images, lacking direct depth information. This limitation poses significant challenges in accurately identifying and localizing complex anatomical regions, such as blood vessels and tumor boundaries. Depth information is crucial for surgical navigation as it provides real-time spatial relationships between surgical instruments and target tissues, which are vital for precise tumor resection and minimizing damage to surrounding healthy structures [2,3]. In natural scenes, acquiring depth information from two-dimensional images has become a standard practice [4,5]. Extensive research has been conducted on monocular and binocular depth estimation methods, which can achieve millimeter-level accuracy, meeting the requirement to remove tumor specimens more than 1 cm away from the tumor [6]. However, these methods pose several challenges when directly applied to the endoscopic environment. These challenges include the scarcity of labeled data, unique image features such as tissue changes, artifacts, and sparse surfaces, the requirement for a processing speed of 30 frames per second (FPS), and the robustness of the methods [7].

Depth estimation techniques for endoscopic imaging can be broadly categorized into optical reconstruction-based methods and spatial geometric transformation based methods. Optical reconstruction methods include laser scanning three-dimensional technology [8], fusion with three-dimensional ultrasound scanning [9], diffractive optical element (DOE) projectors [10], and binary coded structured light endoscopes [11,12]. These techniques typically offer high accuracy but are often costly in terms of equipment and operational complexity. On the other hand, spatial geometric transformation methods, such as those utilizing colonic fold contours [13], the Shape from Shading (SfS) technique [14], and the structure from motion (SfM) technique [15], tend to be simpler. However, when applied to colonoscopy images, they frequently encounter issues related to non-Lambertian surfaces and low texture, which can result in inconsistencies and sparsity in the depth map.

In the field of computer vision, traditional multi-view geometry methods have made significant advances in depth estimation. For instance, Hirschmuller's semi-global matching (SGM) algorithm [16] achieves efficient stereo matching through smoothness constraints and mutual information optimization. Song et al. proposed the Bayesian Dense Inverse Searching (BDIS) method [17], enabling real-time stereo matching. Yang et al. and Xia et al. developed domain-specific stereo-matching techniques and robust edge-preserving methods for laparoscopic images [18,19]. While these methods perform well in specific scenarios, their effectiveness often depends on high-quality input images and complex optimization processes. In contrast, deep learning methods adopt a data-driven approach, directly extracting depth information from endoscopic images without modifying the endoscope's optical structure. The rapid growth of medical datasets and the development of graphic processing unit (GPU) technology have enabled real-time endoscopic depth estimation to achieve higher accuracy [20]. By using deep learning methods, we can extract more detailed depth information from endoscopic images, which is very helpful for surgical navigation and augmented reality (AR) interventions.

In this review, our focus is solely on depth estimation derived from endoscopic images, excluding research pertaining to 3D reconstruction using depth data. To ensure methodological rigor, we implemented systematic Boolean search queries across Web of Science and Scopus databases using: ("endoscop*" OR "laparoscop*") AND ("depth estimat*" OR "disparity estimat*" OR "stereo vision"). We manually screened the full texts, giving priority to papers published in high-impact journals (e.g., IEEE TMI) and top-tier conferences (e.g., CVPR, MICCAI) over the past decade A closely related review is [21], which addresses traditional algorithms, deep learning techniques, and 3D reconstruction for endoscopic image. However, it offers limited insight into deep learning-based methodologies. Furthermore, there is a plethora of review papers on depth estimation [22,23], stereo matching [4,5], and 3D reconstruction [24,25], but these are predominantly based on natural scene images rather than endoscopic images.

The remainder of this paper is organized as follows. Firstly, the section elucidates the fundamental principles of depth estimation and offers a summary of measurement metrics along with an overview of 19 publicly accessible endoscopic depth estimation datasets, considering factors such as acquisition means and image resolution, among others. Secondly, it presents cutting-edge endoscopic depth estimation methods based on deep learning, which are categorized into three types: supervised, self-supervised, and semi-supervised learning. Thirdly, it assesses the performance of ten state-of-the-art representative methods and compares their robustness by testing the original trained models on two new datasets. Fourthly, it delves deeper into existing challenges and proposes future research directions. Finally, it encapsulates the content of this review.

2. Preliminaries

2.1. Principle of depth estimation

When a three-dimensional scene is projected onto a two-dimensional plane, it results in a two-dimensional image. The objective of depth estimation is to address an inverse problem: retrieving the relative distance information between the observer and the objects within the scene, which cannot be directly derived from the two-dimensional image. More specifically, this inverse problem can be articulated as follows: Given an image $I \in \mathbb{R}^{w \times h \times 3}$, comprising three color channels and having dimensions $w \times h$, our task is to estimate the corresponding depth map $D \in \mathbb{R}^{w \times h}$. Within the context of image reconstruction, we must define a mapping function $f : I \rightarrow D$, which transforms color information into depth information of the scene. Presently, popular depth estimation methods predominantly rely on limited depth cues, such as monocular vision (relative size of objects, texture changes, texture gradients, occlusions, etc.) [26], and binocular stereo vision [27]. Depth learning-based models accept monocular or binocular images as input. Through training the depth estimation model, they determine the relative distance of each pixel to the camera and output the corresponding depth map.

Monocular depth estimation suffers from scale ambiguity. Supervised learning methods can only estimate the depth scale approximately with the help of the training image dataset. The unsupervised and semi-supervised methods need other inputs like stereo image pairs,

Table 1
Overview of publicly available datasets for endoscopic depth estimation. '–' means this item is not mentioned in the reference. Data size refers to the number of images or video sequences provided.

Dataset	Camera	Type	Depth source	Scenario	Max Resolution	Data size	Year
Kvasir [28]	Monocular	Real	–	Colon, Stomach	1920 × 1072	4000	2017
Hamlyn [29]	Stereo	Real	–	Kidney	384 × 192	40,000	2017
EndoAbS [30]	Stereo	Real	Laser Scanner	Kidney, Liver, Spleen	640 × 480	120	2018
EndoVis [31]	Monocular	Real	–	Abdominal	1280 × 1024	8 Sequences	2019
UCL [32]	Monocular	Synthetic	Modeling software	Colon	256 × 256	16,016	2019
RSS [33]	Monocular	Real	–	Abdominal	1280 × 1024	16 Sequences	2020
Kvasir-SEG [34]	Monocular	Real	–	Colon, Stomach	1920 × 1072	5000	2020
HyperKvasir [35]	Monocular	Real	–	Colon, Stomach	1920 × 1072	110,079	2020
SERVCT [36]	Stereo	Real	CT	Abdominal	720 × 576	16 Stereo pairs	2020
LDPolypVideo [37]	Monocular	Real	–	Colon	560 × 480	4,200,000	2021
SynColonoscopy [38]	Monocular	synthetic	Modeling software	Colon	320 × 240	10	2021
EndoSLAM [39]	Monocular	synthetic	Modeling software	Colon, Stomach	640 × 480	78,600	2021
SCARED [40]	Stereo	Real	Structured Light Scanner	Abdominal	1280 × 1024	23,000	2021
EndoNerf [41]	Stereo	Real	Algorithm	Prostate	640 × 512	219 Stereo pairs	2022
Scenario [42]	Monocular	synthetic	Modeling software	Colon, Duodenum, Stomach	320 × 320	10,000	2023
StereoMIS [43]	Stereo	Real	–	Abdominal	1280 × 1024	11 Sequences	2023
EndoMapper [44]	Monocular	synthetic	Modeling software	Colon	1440 × 1080	59 Sequences	2023
Simcol3D [45]	Monocular	synthetic	Modeling software	Colon	475 × 475	37,000	2023
C3VD [46]	Monocular	Real	Modeling software	Colon	1350 × 1080	10,015	2023

visual odometry, and 6D camera pose estimation to deal with the scale ambiguity. These methods treat the single-image depth estimation task as a regression problem and use the standard loss function such as Mean Squared Error(MSE). They are trained with many RGB images and depth images. Hence the training set τ can be defined as:

$$\tau = \left\{ \left(I_n, D_n \right) \right\}, I_n \in \mathbb{R}^{w \times h} \quad \text{and} \quad D_n \in \mathbb{R}^{w \times h} \tag{1}$$

Stereo-based depth estimation is fundamentally grounded in the principle of stereo vision, in which an object's depth is determined by the disparity between two images and the camera parameters. The deep learning-driven process of disparity estimation can be categorized into four stages: feature extraction, image feature matching, disparity calculation, and disparity refinement and post-processing. Based on the estimated disparity, we can calculate the depth:

$$D = \frac{f \cdot b}{d} \tag{2}$$

where f is the focal of the camera, b is the baseline of the camera, d is the disparity, and D is the depth.

2.2. Endoscopic depth estimation datasets

Endoscopic depth estimation in surgical scenes presents unique challenges such as the absence of distinct corner features, specular surfaces, and the presence of blood and smoke. These complexities hinder both depth estimation and the creation of standardized datasets. We have curated various publicly accessible endoscopic depth estimation datasets, outlined in Table 1. These datasets encompass a wide range of endoscopic images, featuring diverse lesion types, anatomies, and scenarios, offering researchers rich and varied resources for their investigations.

Some datasets, such as SERVCT [36], EndoAbs [30], SCARED [40], and ENDONERF [41], employ different scanners (computed tomography, laser, structured light) or depth estimation algorithms to obtain real data ground truth. These datasets generally have a small volume. Other datasets, like Colondepth [32], SynColonoscopy [38], Endoslam [39], Scenario [42], EndoMapper [44], C3VD [46], and Simcol3D [45], use various modeling software (Blender, Unity) to acquire synthetic data ground truth. These datasets typically have a larger volume. Furthermore, some datasets such as Kvasir [28], EndoVis [31], StereoMIS [43], RSS [33], Kvasir-SEG [34], HyperKvasir [35], and LDPolypVideo [37] do not contain ground truth and are primarily used for qualitative analysis in depth estimation tasks. We selected the SERVCT and EndoNerf datasets as shown in Fig. 1.

2.3. Measurement metrics

To evaluate the effectiveness of the depth estimation models, we adopted a standardized evaluation protocol proposed by [47], comprising six key metrics: absolute relative error (AbsRel), square relative error (SqRel), root mean square error (RMSE), root mean square logarithmic error (RMSE-log), mean absolute error (MAE), and accuracy(Acc) with a specified threshold (δ). The RMSE and SqRel attach greater weights to larger errors, making these two metrics the preferred choice when significant errors are present in the dataset. AbsRel and RMSElog focus on the proportional relationship between errors and the true values, rather than their absolute magnitude, making them more suitable when the focus is on the proportionality of errors relative to the true values. MAE emphasizes the size of the absolute error and is insensitive to outliers, making it a better choice when there are anomalies in the dataset.

In summary, this survey selects four metrics: RMSE, AbsRel, MAE, and Acc, with their definitions as follows:

$$\text{AbsRel} = \frac{1}{n} \sum_{i=1}^{n} \frac{\left| d_i^{pred} - d_i^{gt} \right|}{d_i^{gt}} \tag{3}$$

$$\text{RMSE} = \sqrt{\frac{1}{n} \sum_{i=1}^{n} \left| d_i^{pred} - d_i^{gt} \right|^2} \tag{4}$$

$$\text{MAE} = \frac{1}{n} \sum_{i=1}^{n} \left| d_i^{pred} - d_i^{gt} \right| \tag{5}$$

$$\text{Acc} = \frac{1}{n} N \left(\max \left\{ \frac{d_i^{pred}}{d_i^{gt}}, \frac{d_i^{gt}}{d_i^{pred}} \right\} < \delta \right) \tag{6}$$

where n is the number of pixels, d_i^{pred} represents the predicted depth of pixel i, d_i^{gt} is the corresponding real depth; $N(\cdot)$ is the number of pixels that $\max \left\{ \frac{d_i^{pred}}{d_i^{gt}}, \frac{d_i^{gt}}{d_i^{pred}} \right\} < \delta = 1.25$.

3. Deep learning techniques for endoscopic depth estimation

In research on depth estimation for endoscopy based on deep learning, supervised learning networks estimate depth maps by learning the structural information of scenes from ground truth depth maps. However, due to the high cost of acquiring ground truth depth maps, some networks have adopted self-supervised or semi-supervised learning methods without such maps. This section will review methods for endoscopic depth estimation based on deep learning, focusing mainly on three aspects: different network architectures in supervised learning, the construction of network loss functions in self-supervised learning, and the impact of data type in semi-supervised learning.

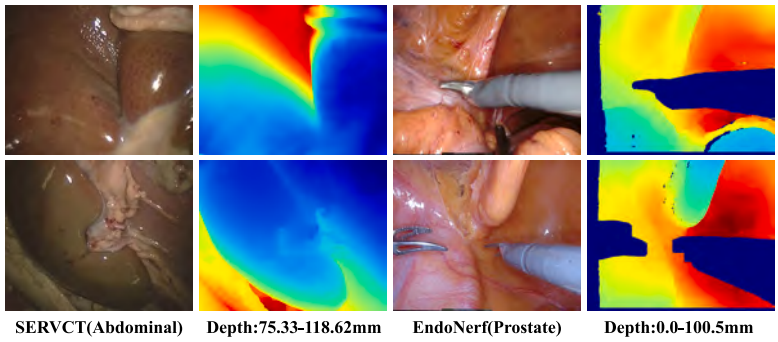

Fig. 1. The first two columns depict the SETVCT dataset, which comprises RGB images and depth maps (depth range: approximately 75–119 mm) of abdominal scenarios. The final two columns illustrate the EndoNerf dataset, which includes RGB images and depth maps (depth range: approximately 0–101 mm) of prostate scenarios.

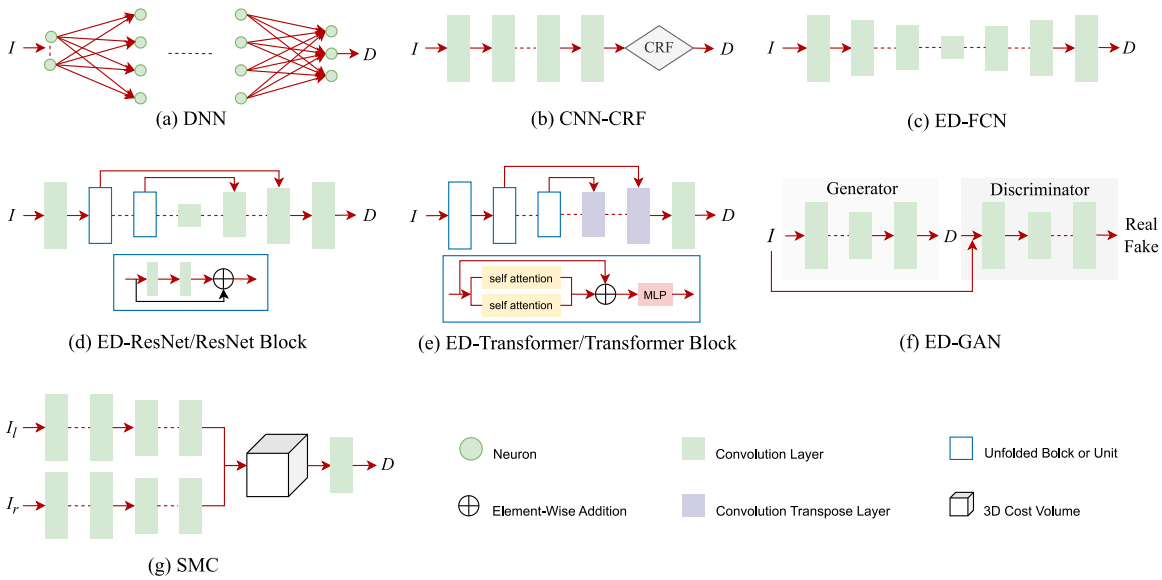

Fig. 2. Different network architectures for endoscopic depth estimation methods based on supervised learning. Here, I denotes the input RGB image, while I_l and I_r represent the left and right RGB views of the input, respectively. D signifies the output depth map. Notably, CRF refers to a conditional random field, a probabilistic graphical model capable of capturing dependencies among labels in sequential data and relationships between labels and features.

3.1. Supervised learning methods

Different network architectures have been developed to augment either the precision or robustness of depth estimation. Deep neural networks (DNNs) are advanced machine learning models that mimic the neural structures of the brain to enable learning and prediction. Antal et al. [48] first introduced a six-layer DNN for three-dimensional coordinate estimation, as shown in Fig. 2 (a). However, the complexity of endoscopic images, combined with noise and obstructions, makes it difficult for traditional DNNs to accurately extract features and estimate depth.

Convolutional Neural Networks (CNNs) have shown great performance in image processing tasks due to their ability to extract features independently. Mahmood et al. [49–51] proposed a CNN-CRF architecture that combines a Fully Convolutional Network (FCN) and Conditional Random Field (CRF) for training a depth estimation network on synthetic data. As shown in Fig. 2(b), the proposed architecture uses an FCN to extract depth features from endoscopic images and then applies a dense CRF to improve the accuracy of depth estimation. This approach can not only improve the reliability of depth measurement but also effectively handle noise and occlusions in endoscopic images.

Encoder–decoder (ED) architectures have been widely used in deep learning for image segmentation and video prediction due to their ability to capture spatial and contextual information. Visentini-Sscarzanella and Oda, et al. [52,53] proposed ED-FCN, a two-stage framework with shared encoder–decoder architecture (Fig. 2(c)). The first stage transforms textured endoscopic images to textureless CT maps using this architecture, thereby boosting structural saliency. Subsequently, the second stage employs the same architecture to predict depth maps from CT images, utilizing depth supervision. However, this isolated training approach precludes cross-stage feature refinement, ultimately limiting the accuracy of depth estimation.

The Residual Network (ResNet) integrates residual learning architecture to enable the construction of deeper networks without performance degradation and learn more complex feature representations. It is particularly suitable for processing detailed endoscopic images. As shown in Fig. 2(d), the general architecture can be obtained by adding a ResNet Block to the bottom of the ED-FCN architecture. Yang et al. [42] designed the LINGMI-MR network with ResNet18 as the encoder, and added Spatial Attention Blocks (SAB) to enhance spatial feature detection. Wang et al. [54] used ResNet34 as the backbone of the encoder, and combined it with a Feature Pyramid Network (FPN) module and a positional information enhancement module to improve the network's feature extraction ability.

The Vision Transformer (ViT) architecture, characterized by its global receptive field, is particularly beneficial for depth estimation tasks due to its capacity to encapsulate comprehensive contextual information across the entirety of the image [55]. As shown in Fig. 2(e), Lu et al. [56] propose an encoder–decoder architecture named VDEN, which uses ViT as the backbone module for depth estimation.

Table 2
Formulas and explanations of different loss functions.

Loss function	Computation	Description and symbol explanation
L1 reconstruction loss ($\mathcal{L}_{rec}$)	$\mathcal{L}_{rec} = \sum_p \lvert I_p - \hat{I}_p \rvert$	This loss computes pixel-wise absolute difference, where I_p and $\hat{I}_p$ are the intensities at pixel p in the target and reconstructed images, respectively.
SSIM loss ($\mathcal{L}_{ssim}$)	$\mathcal{L}_{ssim} = 1 - \mathrm{SSIM}(I_p, \hat{I}_p)$	This loss evaluates structural similarity between I_p and $\hat{I}_p$ using SSIM, and converts it to a minimization objective via $1 - \mathrm{SSIM}$.
Disparity consistency loss ($\mathcal{L}_{lr}$)	$\mathcal{L}_{lr} = \sum_p \lvert d_{l\to r}(p) - d_{r\to l}(p) \rvert$	This loss enforces consistency between left-to-right disparity $d_{l\to r}(p)$ and right-to-left disparity $d_{r\to l}(p)$ at each pixel p.
Disparity smoothness loss ($\mathcal{L}_{smooth}$)	$\mathcal{L}_{smooth} = \sum_p \left(\lvert \nabla_x d_p \rvert^2 + \lvert \nabla_y d_p \rvert^2 \right)$	The function facilitates smooth gradient transitions within the depth map. Here, $\nabla_x d_p$ denotes the horizontal gradient, while $\nabla_y d_p$ denotes the vertical gradient of the depth map.
Patch matching loss ($\mathcal{L}_{pm}$)	$\mathcal{L}_{pm} = 1 - \mathrm{ZNCC}(P_{left}, P_{right})$	This loss penalizes patch-wise dissimilarity by computing the Zero-Mean Normalized Cross-Correlation (ZNCC) between corresponding patches in the left and right views.
3D consistency loss ($\mathcal{L}_{3D}$)	$\mathcal{L}_{3D} = \sum_{i=1}^{N} \min_j \lVert P_{l_i} - P_{r_j} \rVert^2$	This loss enforces consistency between 3D point clouds, where P_{l_i} and P_{r_j} are points from the left and right views, and N is the number of points in the cloud.
Semantic-guided loss ($\mathcal{L}_{sem}$)	$\mathcal{L}_{sem} = \mathbf{M}(\lvert \nabla d_x \rvert + \lvert \nabla d_y \rvert)$	A simplified smoothness loss constrained by semantic mask $\mathbf{M}$, enforcing depth continuity within object regions. Edge-aware weights can also be applied.
Adversarial loss ($\mathcal{L}_{adv}$)	$\mathcal{L}_{adv} = \mathrm{GAN_Loss}(G, D)$	The function is employed to train the generator G to generate depth prediction images that the discriminator D cannot easily distinguish.
Feature reconstruction loss ($\mathcal{L}_{feat}$)	$\mathcal{L}_{feat} = \sum_{l\in\mathcal{L}} \lVert \phi_l(I_{gt}) - \phi_l(\hat{I}) \rVert_p$	This loss compares high-level features from predicted $\hat{I}$ and ground-truth I_{gt}, where $\phi_l(\cdot)$ denotes the lth layer of a pretrained network, and $\lVert \cdot \rVert_p$ is the Lp norm.
Auto-masking loss ($\mathcal{L}_{mask}$)	$\mathcal{L}_{mask} = \sum_{p\in\mathcal{M}} \lvert I_p - \hat{I}_p \rvert$	This loss masks out pixels where photometric reconstruction is ambiguous, keeping only reliable pixels $\mathcal{M}$ for supervision. It prevents the network from being penalized by dynamic or non-corresponding regions.
Sparse flow loss ($\mathcal{L}_{sparse}$)	$\mathcal{L}_{sparse} = \sum_{p\in M_{SIFT}} \lvert F_p - \hat{F}_p \rvert$	This loss measures the error between sparse SIFT flow F_p and predicted flow $\hat{F}_p$, using mask M_{SIFT} to include only reliable keypoints.
Vertical correction loss ($\mathcal{L}_{vcm}$)	$\mathcal{L}_{vcm} = \lVert \lvert V_l \rvert - \lvert V_r \rvert \rVert$	The function measures the differences in vertical displacement maps between the left and right views of stereo images. V_l and V_r correspond to the vertical displacement maps of the left and right views, respectively.
High-frequency loss ($\mathcal{L}_{HF}$)	$\mathcal{L}_{HF} = \sum_p \lvert H(I_p) - H(\hat{I}_p) \rvert$	The function works by comparing the high-frequency parts of the original and reconstructed images, with $H(I)$ representing these parts from image I.
Appearance flow loss ($\mathcal{L}_{af}$)	$\mathcal{L}_{af} = \sum_p \lvert \nabla C_\delta(p) \rvert \cdot e^{-\lvert \nabla (I_p - \hat{I}_p) \rvert}$	This loss adapts flow smoothness to brightness variation, using $\lvert \nabla C_\delta(p) \rvert$ for smoothness and an exponential term for image consistency.
Pose consistency loss ($\mathcal{L}_{fbp}$)	$\mathcal{L}_{fbp} = \sum_t \lvert T_{t\to t+1} - T_{t+1\to t} \rvert$	The function guarantees consistency in the pose transformation from one frame to the subsequent frame and vice versa. Here, $T_{t\to t+1}$ denotes the relative pose transformation from time frame t to $t+1$.
2D consistency loss ($\mathcal{L}_{2D}$)	$\mathcal{L}_{2D} = \sum_p \frac{\lvert D_i(p) - D'_{i+1}(p) \rvert}{D_i(p) + D'_{i+1}(p)}$	This loss compares depth maps D_i and D'_{i+1}, where $D'_{i+1}(p)$ is warped from D_i via predicted pose transformation.
Knowledge distillation loss ($\mathcal{L}_{KD}$)	$\mathcal{L}_{KD} = \sum_p \Phi(p) \cdot (D_t(p) - D_{\mathrm{pseudo}}(p))$	This loss aligns predicted depth D_t with pseudo-labels D_{pseudo}, where $\Phi(p)$ masks out unreliable regions using multi-view checks.
Confidence loss ($\mathcal{L}_{conf}$)	$\mathcal{L}_{conf} = \sum_p \mathrm{BCE}(K_p, \hat{K}_p)$	Binary cross-entropy loss between predicted confidence K_p and ground truth $\hat{K}_p$ (1 if disparity error < 3 pixels), encouraging reliable confidence estimation.
Disparity value loss ($\mathcal{L}_{value}$)	$\mathcal{L}_{value} = \sum_p \alpha_p \cdot \mathrm{smoothL1}(D_p - \hat{D}_p)$	Weighted smooth L1 loss between predicted disparity D_p and ground truth $\hat{D}_p$. Defined as: $\mathrm{smoothL1}(x) = 0.5x^2$ if $\lvert x \rvert < 1$, else $\lvert x \rvert - 0.5$.
Distribution loss ($\mathcal{L}_{dist}$)	$\mathcal{L}_{dist} = -\sum_p \sum_s \hat{P}_p(s) \log P_p(s)$	KL divergence between predicted disparity distribution $P_p(s)$ and confidence-adjusted unimodal label $\hat{P}_p(s)$ for probabilistic consistency.

The proposed method takes advantage of the patch-based processing ability of ViT to obtain a better scene understanding and thus improves the accuracy of depth prediction.

Generative Adversarial Networks (GANs) utilize adversarial learning between the generator and discriminator to enable the generator to emulate the data distribution of real depth maps, thereby producing realistic depth maps. Fig. 2(f) illustrates some methods that use GANs in the encoder–decoder framework and propose an ED-GAN architecture. Shen et al. [57] proposed a context-aware depth estimation method based on GANs to reduce artifacts.

Stereo vision estimation based on deep learning calculates disparity by constructing a cost volume. Wang et al. [58,59] first applied the Stereo Matching Cost (SMC) architecture to endoscopic imagery (Fig. 2(g)). Subsequent studies improved the matching cost by using multi-scale features and integrating information from multiple layers to improve the accuracy of disparity estimation. Based on this architecture, Yu et al. [60] achieved better results through dataset enhancement. Zhao et al. [61] designed a module to eliminate mirror reflections and recover texture details, and proposed the Oriented Point (OP) loss function to further improve accuracy. Wei et al. [62] proposed HRS, which uses the ED-ResNet architecture for feature extraction to optimize the matching cost. Long et al. [63] and Cheng et al. [64] also improved the accuracy of the matching cost based on ViT architecture, and Cheng et al. proposed HybridStereoNet. Psychogyios et al. [20] introduced Msdesis, a technique that augments depth estimation accuracy by incorporating segmentation tasks.

3.2. Self-supervised learning methods

The efficacy of self-supervised depth estimation techniques is predominantly contingent upon the design of the loss function. This function's primary objective is to extract information from unlabeled data more efficiently, thereby enhancing the precision and dependability of depth estimation. Table 2 presents several prevalent loss functions. Table 3 provides a categorized overview of loss functions adopted in self-supervised endoscopic depth estimation. The frequency column reveals usage trends across the literature. Depending on whether they utilize other network structures for depth estimation, self-supervised learning methods for endoscopic depth estimation can be divided into two categories. The first category is the left–right consistency method,

Table 3
Categorized summary of loss functions used in self-supervised endoscopic depth estimation. The "Frequency" column indicates how often each loss category appears among the 34 self-supervised methods reviewed in this survey.

Loss category	Typical loss	Description	Representative papers	Frequency
Photometric & appearance-based	$\mathcal{L}_{rec}, \mathcal{L}_{ssim}, \mathcal{L}_{HF}, \mathcal{L}_{mask}$	Reconstruct views and preserve textures, often with occlusion masking	Endo-SfMLearner [29], Endo-depth-and-motion [65], GI-Endoscopy [66], SVT-SDE [67]	16
Smoothness & structural regularization	$\mathcal{L}_{smooth}, \mathcal{L}_{sem}, \mathcal{L}_{adv}$	Encourage spatial coherence and edge-aware regularity, sometimes guided by semantics or adversarial feedback	CLIP-guided [68], GI-Endoscopy [66], Endo-SfMLearner [29]	12
Geometric consistency	$\mathcal{L}_{3D}, \mathcal{L}_{2D}, \mathcal{L}_{sparse}$	Maintain depth consistency across views or in 3D point space; includes sparse correspondence matching	Endo-SfMLearner [29], M3Depth [69], SfMDiffusion [70], Dense Stereo [71]	10
Temporal consistency	$\mathcal{L}_{fbp}, \mathcal{L}_{2D}$	Stabilize depth/prediction across video frames using inter-frame constraints	SVT-SDE [67], SfMDiffusion [70], Endo-depth-and-motion [65], Ego-motion estimation [72]	6
Distillation-based	$\mathcal{L}_{KD}$	Transfer pseudo-labels from teacher models to guide student networks	SfMDiffusion [70]	1
Uncertainty-aware	$\mathcal{L}_{conf}, \mathcal{L}_{dist}$	Learn prediction reliability or depth distributions to manage noisy inputs	SMUDLP [73], StaSiS-Net [74]	1

which uses the disparity constraints between paired images to construct a loss function that can accurately infer depth. The second category is the camera pose estimation method, which uses the network to establish accurate geometric constraints between consecutive frames to construct a loss function that can accurately measure depth.

3.2.1. Left–right consistency

Ye et al. [29] first applied self-supervised Siamese networks to depth estimation in the surgical field, using L1 image reconstruction loss and left–right disparity consistency loss to guide the network learning process for accurate depth map prediction. Luo et al. [75] further improved this method by adding vertical correction loss and GAN loss to refine the depth map generation due to the possible errors in the correction of stereoscopic images.

Mahmood et al. [76] and Ye et al. [77] proposed an autoencoder model similar to ED-FCN, and Li et al. [78] introduced the Robot-Depth model that uses an ED-ResNet architecture for depth estimation. Both models use SSIM loss in addition to L1 image reconstruction loss to better represent the distribution of real images and reduce artifacts in the output. Chong et al. [79] employed an encoder–decoder framework to establish a dual-branch architecture, incorporating both a depth estimation network and a confidence estimation network for the analysis of medical endoscopic images.

Yang et al. [80] extended the L1 image reconstruction loss and SSIM loss framework by introducing a depth smoothness loss to ensure the continuity and smoothness of the depth map, which is consistent with the image gradients. Huang et al. [81] and Cheng et al. [82] improved the autoencoder network by adding GAN loss and using a discriminator to distinguish between synthetic and real images. Yang et al. [71] added optical flow loss to enhance their results. Xu et al. [83] proposed a 2D structural consistency loss. Mathew et al. [84] and Itoh et al. [85] introduced a generative adversarial network, termed CycleGAN, designed to synthesize realistic virtual colonoscopy and optical colonoscopy images. The model's stability was enhanced through the refinement of loss functions and the implementation of spectral normalization.

Some methods combine L1 image reconstruction loss and SSIM loss as an appearance-matching criterion, and further refine the depth maps by adding left–right disparity consistency loss and smoothness loss. Yoon et al. [86] use ED-ResNet architecture for depth estimation; Bardozzo et al. [74] propose StaSiS-Net based on the same framework to calculate accurate disparity maps for 3D laparoscopic depth estimation; Zhang et al. [87] enhance the ED-ResNet architecture with a Laplacian pyramid to improve the network's ability to extract intermediate features, thereby refining disparity details; Tukra et al. [88] use SMC architecture for depth estimation.

Building upon the four loss functions, Xi et al. [89] proposed ConfidenceNet for patch-matching loss implementation and used ED-ResNet to estimate depth. Huang et al. [69] developed the M3Depth model, which incorporated a loss function for three-dimensional geometric structure consistency. Tao et al. [67] introduced high-frequency loss and employed spatiotemporal attention mechanisms to incorporate high-frequency information, utilizing complementary visual and temporal data from stereo video sequences to enhance depth estimation accuracy. Tukra et al. [90] combined adversarial and feature loss, employing a randomly connected ED-ResNet architecture for depth estimation.

3.2.2. PoseCNN

In contrast to left–right consistency methods, which depend on spatial disparities between stereo image pairs, PoseCNN-based techniques establish temporal consistency by leveraging consecutive frames in endoscopic video sequences. These techniques concurrently estimate camera pose and depth, allowing for the application of view synthesis constraints and photometric consistency between neighboring frames. By synchronizing depth maps using estimated inter-frame motion, they ensure geometric consistency over time, enhancing stability against occlusions, deformation, and illumination variations.

Turan et al. [91] were the first to apply the SfMLearner [92] in live pig stomach video environments, utilizing L1 image reconstruction loss and depth smoothness loss for depth estimation. Following this, Shao et al. [72,93] developed the AF-SfMLearner method, which enhances the SfMLearner network with an appearance flow loss to improve depth estimation accuracy under varying luminance conditions.

L1 image reconstruction loss, SSIM loss and depth smoothness loss have been used in many methods. EndoDepth (Recasens et al. [65]) is a method that uses L1 loss to reconstruct the input image. Huang et al. [94] proposed an unsupervised method that adds a feedback network to calculate the L1 and SSIM losses of the depth information between adjacent frames. Wu et al. [95] added a mask image modeling module to enhance the global information perception of the network, which can obtain more accurate depth estimation results. Liu et al. [66] added an attention module to the ED-ResNet architecture and replaced the SSIM loss with multi-scale loss to improve the accuracy of the network in predicting the depths of weakly textured areas and high luminance areas. Li et al. [96] proposed EndoMotionNet and EndoDepthNet, which use PSNR loss instead of SSIM loss.

The three loss functions, as previously mentioned in the paragraph above, serve as the foundation for this study. Widya et al. [97] proposed a forward–backward pose consistency loss to improve the accuracy of motion estimation between adjacent frames in video sequences for deep learning models. Ozyoruk et al. [39] proposed Endo-SfMLearner, which

Table 4
Overview of supervised deep learning methods for endoscopic depth estimation. Metrics are drawn from original papers and are not directly comparable due to dataset variations. One representative scenario is shown per method.

Reference	Architecture	Metric	Train dataset	Test dataset	Resolution	Speed	Machine
Antal et al.[48]	DNN	$RMSE$: 13.18	Hamlyn	Hamlyn	360 × 288	–	–
Mahmood et al.[49]	CNN-CRF	$RMSE$: 0.973 $AbsRel$: 0.242	Synthetic + phantom	Porcine (CT)	720 × 576	–	–
LINGMI-MR [42]	ED-ResNet	$RMSE$: 0.066 $AbsRel$: 0.276	Synthetic (custom)	EndoSLAM	320 × 320	120 FPS	RTX 2080Ti
Wang et al.[54]	ED-ResNet	$RMSE$: 0.26 $AbsRel$: 0.2	Custom	Custom (split)	384 × 288	–	Tesla P40
VDEN [56]	ED-Transformer	Acc : 0.82	Synthetic + phantom	Porcine (CT)	384 × 384	19 FPS	–
Shen et al.[57]	ED-GAN	–	CT + Bronchoscopy	Bronchoscopy	307 × 313	50 FPS	Titan XP
Wang et al.[58]	SMC	MAE : 0.4145	Blender (synthetic)	Real endoscopy	960 × 720	45 FPS	GTX 1080
HRS [62]	SMC	$RMSE$: 2.959 $AbsRel$: 0.029	SCARED	SCARED	1280 × 1024	20 FPS	Titan XP
E-dssr [63]	SMC	–	DaVinci (In-house)	DaVinci	640 × 512	28 FPS	Titan X
HybridStereoNet [64]	SMC	$RMSE$: 4.137	SceneFlow + SCARED + dVPN	SCARED	504 × 840	–	Quadro GV100

combines 2D geometric consistency loss and uses ED-FCN architecture for depth estimation to improve the stability and accuracy of the model's depth estimation on complex tissue structures in endoscopic images.

Some other methods combine the above loss functions to further improve depth estimation. Shao et al. [73] use smoothness loss and 2D structural consistency loss, and convert Path Loss into a keypoint loss for depth refinement. Liu et al. [98] combine L1 image reconstruction loss, smoothness loss, 3D structural consistency loss, feature loss, and forward–backward pose consistency loss with 2D structural consistency loss to enhance the accuracy of depth estimation. Yang et al. [68] suggested a smooth loss function of semantic guidance, the purpose of which is to underscore consistency and smoothness within a singular semantic task. Liao et al. [99] integrated a series of techniques – mask minimization, smoothness loss, disparity smoothness loss, photometric reconstruction loss, depth metric consistency loss, and pose consistency loss – to enhance the precision of depth estimation. Li et al. [70] proposed SfMDiffusion, which applies diffusion models to refine depth predictions through a denoising process guided by a teacher network. It integrates pseudo-ground-truth guidance, discriminative priors, and photometric loss to improve robustness under specular reflections and scene deformation.

3.3. Semi-supervised learning methods

Semi-supervised learning methods integrate the benefits of supervised and unsupervised learning by training models with a combination of sparsely labeled data and abundant unlabeled data. These techniques can significantly enhance model performance in endoscopic depth estimation tasks by leveraging both the limited labeled data and the plentiful unlabeled data. Labeled data usually contains a small amount of ground truth densely acquired by 3D scanners, a large number of synthetically generated ground truth densely and a few real data sparsely generated by SFM.

Shi et al. [100] proposed a bidirectional dual-branch learning method, which first trains each branch with a small amount of labeled real data and then uses adaptive cross supervision (ACS) and adaptive parallel supervision (APS) to incorporate unlabeled data for further training. Another approach is to use synthetic data with ground truth depth values and domain transfer methods to infer depth. For instance, Karaoglu et al. [101] converted real RGB images into the synthetic domain and trained the depth estimation network with synthetic depth ground truth. Training sub-networks separately may lead to poor performance. Jeong et al. [102] converted synthetic RGB images into the real domain, while Rau et al. [32] mapped both real and synthetic RGB images into the depth domain. Yang et al. [103] proposed an adversarial diffusion model that combines supervised learning on synthetic data with adversarial domain adaptation. By introducing a latent-space diffusion-denoising process, the model enhances feature-level alignment and alleviates the mapping bias typical of GAN-based approaches.

Liu et al. [104,105] further proposed a depth completion strategy to generate high-resolution accurate dense depth maps from the sparse SfM-derived depth data. However, these methods have the following drawbacks: First, the supervision signal is based on sparse data from SFM, which may result in insufficient depth information for organ tissues with little surface texture. Second, Using SFM as a preprocessing step before learning is dependent on its accuracy and may not be suitable when SFM cannot provide reliable results.

4. Performance comparison of deep learning methods

4.1. Summary of experimental performance

This section presents a comprehensive review of deep learning-based methods for endoscopic depth estimation, including supervised, self-supervised, and semi-supervised approaches. For supervised learning, we emphasize the impact of architectural choices, which are summarized in Table 4. In the self-supervised setting, we focus primarily on loss function design and highlight their relative effectiveness through ablation studies (Table 5). For semi-supervised approaches, Table 6 presents the influence of different labeling strategies and domain adaptation techniques under limited supervision. Note that, the metrics reported in these tables are directly extracted from the original papers, as most reviewed methods are not open-sourced and cannot be consistently reproduced.

Table 4 provides an overview of representative supervised methods. While the results are not directly comparable due to differences in datasets and evaluation setups, several architectural patterns emerge. Early fully connected models (e.g., Antal et al.) perform poorly due to limited spatial encoding. ED-ResNet architectures show moderate improvements by leveraging residual connections and hierarchical features. Methods based on SMC (Stereo Matching Cost), such as HRS and HybridStereoNet, achieve higher accuracy by incorporating stereo geometry. ED-Transformer further improves performance through global context modeling with self-attention. These trends suggest that integrating strong spatial priors – either through stereo constraints or attention mechanisms – is more beneficial than simply increasing network depth.

Table 5 highlights the effectiveness of different loss functions based on reported ablation studies, and they are not intended for direct comparison across methods. Among them, geometric consistency loss ($\mathcal{L}_{3D}$) shows the most significant impact, reducing AbsRel by 0.15 and RMSE by 24.2. Sparse supervision ($\mathcal{L}_{sparse}$) and occlusion masking ($\mathcal{L}_{mask}$) also contribute notable performance gains. Photometric reconstruction ($\mathcal{L}_{ssim} + \mathcal{L}_{lr}$) and knowledge distillation ($\mathcal{L}_{KD}$) lead to moderate improvements, while semantic-guided loss ($\mathcal{L}_{sem}$) exhibits limited effect. Table 3 complements this analysis by categorizing loss types across the literature. Generally, photometric and smoothness losses serve as the backbone of most self-supervised frameworks. Geometric and temporal consistency losses offer strong benefits when stereo pairs or sequential frames are available. Meanwhile, distillation-based and uncertainty-aware losses remain underexplored and require further validation. Overall, combining complementary loss terms tends to yield better generalization and robustness.

Table 6 summarizes representative semi-supervised methods that combine limited labeled data, such as synthetic ground truth, sparse

Table 5
Ablation results of loss functions in selected self-supervised depth estimation methods. Only methods that explicitly report the effect of individual loss components are included. All metrics are cited directly from the original publications.

Paper	Loss type	Metric change (before → after)	Train/test dataset
SfMDiffusion [70]	Knowledge distillation loss $\mathcal{L}_{KD}$	AbsRel: 0.058 → 0.053/RMSE: 4.939 → 4.443	SCARED
	Photometric loss $\mathcal{L}_{ssim} + \mathcal{L}_{lr}$	AbsRel: 0.058 → 0.053/RMSE: 4.939 → 4.584	
	Combined loss $\mathcal{L}_{KD} + \mathcal{L}_{ssim} + \mathcal{L}_{lr}$	AbsRel: 0.058 → 0.049/RMSE: 4.939 → 4.305	
CLIP-guided [68]	Semantic segmentation loss $\mathcal{L}_{sem}$	AbsRel: 0.087 → 0.085/RMSE: 6.518 → 6.371	SCARED
SVT-SDE [67]	High-frequency loss $\mathcal{L}_{HF}$	mADE: 4.83 → 3.42	SCARED
M3Depth [69]	3D geometry consistency loss $\mathcal{L}_{3D}$	AbsRel: 0.275 → 0.125/RMSE: 33.796 → 9.625	SCARED
Dense Stereo [71]	Auto-masking loss $\mathcal{L}_{mask}$	AbsRel: 11.02 → 9.87/RMSE: 11.38 → 10.20	SCARED
	Sparse flow loss $\mathcal{L}_{sparse}$	AbsRel: 11.02 → 7.37/RMSE: 11.38 → 7.76	
	Combined losses $\mathcal{L}_{mask} + \mathcal{L}_{sparse}$	AbsRel: 11.02 → 7.17/RMSE: 11.38 → 7.55	
GI-Endoscopy [66]	MS-SSIM + L1 loss $\mathcal{L}_{ssim} + \mathcal{L}_{rec}$	AbsRel: 0.284 → 0.273/RMSE: 0.084 → 0.047	EndoSLAM

Table 6
Overview of semi-supervised methods for endoscopic depth estimation. Each method combines limited labeled data (e.g., synthetic or sparse) with unlabeled real endoscopic data. Strategies include domain adaptation, pseudo-label refinement, or depth completion. 'Sim-CT' refers to CT-based simulation, and 'VR colonoscopy' to virtual RGBD data. Metrics are cited directly from the original publications and are not directly comparable across methods.

Method	Strategy	Train dataset	Test dataset	Domain gap	Metrics
Karaoglu et al. [101]	Adversarial feature adaptation	Synthetic (bronchoscopy) + real	Phantom	Yes	RMSE: 7.53, Acc: 0.46
Jeong et al. [102]	Sim-to-real (CycleGAN)	Sim-CT (colon)	Real colonoscopy	Yes	RMSE: 6.36, Acc: 0.99
Shi et al. [100]	Dual-branch pseudo labels	SERV-CT (stereo GT)	SERV-CT	No	RMSE: 1.99
Liu et al. [104]	Sparse-to-dense completion	VR colonoscopy (RGB + sparse)	Same (simulated)	No	RMSE: 0.94, Acc: 0.98
Yang et al. [103]	Diffusion-based domain adaptation	Synthetic (bronchoscopy) + real	Real bronchoscopy	Yes	RMSE: 6.08, Acc: 0.82

depth from SfM, or pseudo-labels, with large-scale unlabeled endoscopic images. The table highlights three key strategies: domain adaptation, pseudo-label refinement, and depth completion. Methods trained and tested within the same domain [100,104] generally perform better, benefiting from consistent data distribution. In contrast, methods involving domain gaps across synthetic and real domains (e.g., Karaoglu et al. [101], Jeong et al. [102], Yang et al. [103]) often show higher error rates, despite using adversarial or diffusion-based transfer techniques. This suggests that domain shift remains a major challenge in semi-supervised depth estimation.

4.2. Comparison of model robustness

Deep learning models are data-driven. In many cases, they need to be retrained on specific datasets before they can be used. Eliminating the need for re-training on the same or similar anatomical regions across patients would greatly speed up the deployment of artificial intelligence (AI) in medicine. Therefore, we chose SERVCT and EndoNerf datasets, which contain real data from abdominal and prostate anatomical regions with complex lighting conditions and different occlusions. We tested the robustness of 10 networks on similar anatomical regions. Since SCARED is currently the only publicly available real-scene endoscopic dataset with large-scale ground truth depth (over 23,000 stereo frames), most networks were pre-trained on it as reported in the respective papers. Notably, none of the evaluated models were originally trained on SERVCT or EndoNerf, which ensures a fair assessment of their cross-anatomy generalization. If original pre-trained weights were available, we used them; otherwise, we retrained the models on raw data. All experiments were run on a single Nvidia RTX A5000 GPU.

The qualitative analysis is shown in Fig. 3. We can see that Bidirectional [100] and HRS [62] methods have good performance on both datasets, which are similar to the pseudo-color display of ground truth depth maps. Although HybridStereoNet [64], Msdesis [20], and STTR [41,106] methods have slightly blurry edge structures on the SERVCT dataset, they achieve good results on EndoNerf dataset. The Domain-Gap method [107] performs poorly on both datasets and is significantly different from the structure of ground truth depth maps. Although AF-SfMLearner [72], Endo-SfMLearner [39], LINGMI-MR [42], and M3Depth [69] methods have differences in overall contours and pseudo-color display compared with ground truth depth maps, their optimization by appearance, brightness transformation, and geometric constraints improve some edge details and make them closer to the input image.

The quantitative analysis in Table 7 shows that the pre-training methods for abdominal data significantly outperformed those from other scenarios on the SERVCT dataset. This performance gain can be attributed to the smaller domain gap between the pre-training data and the SERVCT test images, both of which originate from abdominal anatomical regions and share similar textures, illumination patterns, and occlusion characteristics, which facilitates more effective feature transfer. Among them, the Bidirectional [100] method achieved the best performance with an accuracy of 99% for errors less than 1.25 mm and a mean absolute error (MAE) of 1.793 mm, which meets the requirement of tumor resection being less than 1 cm. The MAE metrics of the HybridStereoNet [64], Msdesis [20], and HRS [62] methods also met the standard. Although Msdesis performed better in terms of real-time capability, its accuracy was not the highest. The superior robustness of Bidirectional [100] arises from its dual-branch ED-ResNet-like architecture (Fig. 2(d)) and hybrid supervision scheme. Each branch predicts disparity, confidence, and distribution, guiding the other through confidence-weighted alignment ($\mathcal{L}lr$) and KL-based distribution consistency ($\mathcal{L}dist$). Supervised losses on labeled data ($\mathcal{L}value$, $\mathcal{L}conf$) further enhance learning. This design effectively integrates both labeled and unlabeled data, achieving strong cross-domain generalization. Compared to photometric-only approaches (e.g., M3Depth [69]) or geometry-agnostic designs (e.g., LINGMI-MR [42]), Bidirectional offers a more balanced, robust, and generalizable training framework. Self-supervised learning methods mainly rely on unlabeled data, which may be insufficient in capturing depth features specific to endoscopic scenes, resulting in poorer performance in robustness tests compared to supervised learning methods. For the EndoNerf dataset, since the pre-training data for all methods were not prostate data, the accuracy of all methods for errors less than 1.25 mm was below 50%, and the MAE metrics all exceeded 20 mm.

4.3. Comparison across learning paradigms

This section compares supervised, self-supervised, and semi-supervised learning paradigms for endoscopic depth estimation. These approaches differ in their reliance on labeled data, sensitivity to domain shifts, and adaptability to clinical scenarios. We examine key

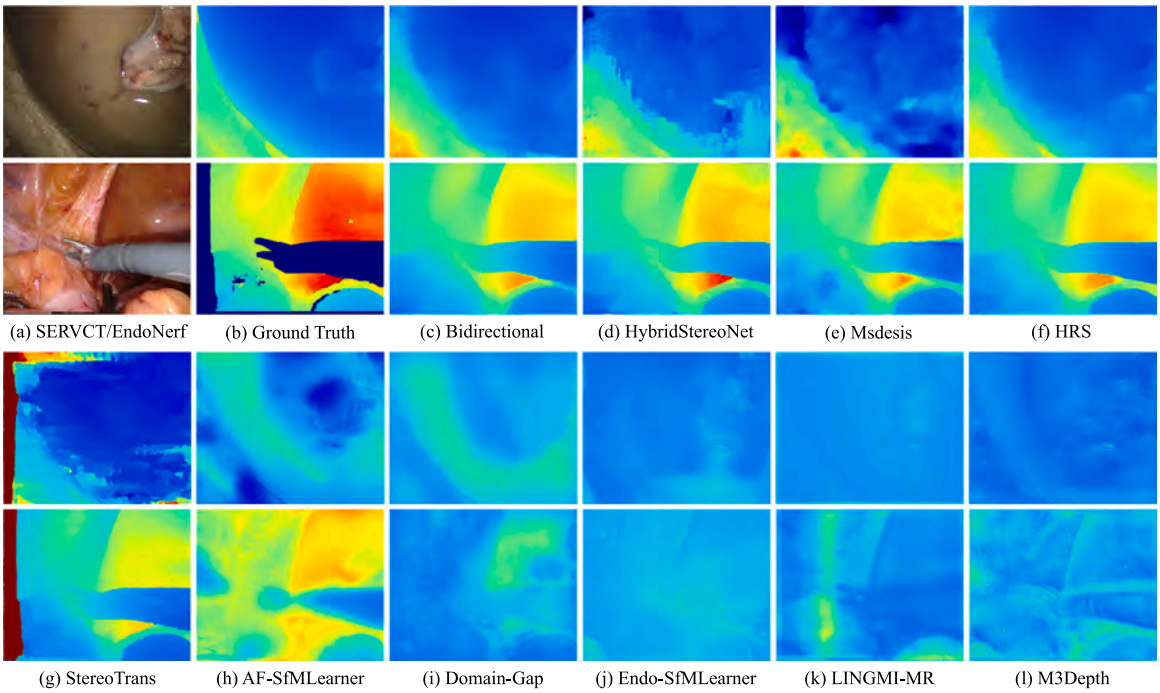

Fig. 3. Comparative experimental results on the SERVCT and EndoNerf dataset, (a) input images and (b) the ground-truth depth maps. The predicted depth map results on (c) Bidirectional [100], (d) HybridStereoNet [64], (e) Msdesis [20], (f) HRS [62], (g) STTR [41,106], (h) AF-SfMLearner [72], (i) Domain-Gap [107], (j) Endo-SfMLearner [39], (k) LINGMI-MR [42], (l) M3Depth [69].

Table 7
Cross-dataset robustness evaluation of open-source depth estimation methods. All models are pre-trained on their original training datasets and tested under two unseen real-world datasets SERV-CT and EndoNeRF for consistent evaluation. Top two results per metric are highlighted in bold and underlined.

Test dataset	Methods	Manner	Train dataset	Abs Rel ↓	RMSE ↓	MAE ↓	SSIM ↑	Acc ↑	Speed
SERVCT (Abdominal)	Bidirectional [100]	Semi-supervised	SCARED	**0.020**	**3.585**	**1.793**	**0.908**	**0.990**	2 FPS
	HybridStereoNet [64]	Supervised	SCARED	0.072	12.448	5.692	0.776	0.926	3 FPS
	Msdesis [20]	Supervised	SCARED	0.061	10.194	5.594	0.746	0.916	102 FPS
	HRS [62]	Supervised	SCARED	<u>0.024</u>	<u>4.234</u>	<u>2.228</u>	<u>0.847</u>	<u>0.989</u>	39 FPS
	STTR [41,106]	Self-supervised	SCARED	0.263	39.581	40.387	0.577	0.280	3 FPS
	AF-SFMLearner [72]	Self-supervised	SCARED	0.314	24.543	21.719	0.668	0.491	**220 FPS**
	Domain-Gap [107]	Semi-supervised	EndoMapper	0.349	25.834	23.538	0.652	0.455	27 FPS
	Endo-SfMLearner [39]	Self-supervised	EndoSLAM	0.276	22.614	19.997	0.695	0.539	<u>116 FPS</u>
	LINGMI-MR [42]	Supervised	Scenario	0.306	24.305	21.628	0.662	0.487	1 FPS
	M3Depth [69]	Self-supervised	SCARED	0.262	22.331	19.507	0.682	0.539	68 FPS
EndoNerf (Prostate)	Bidirectional [100]	Semi-supervised	SCARED	**0.296**	**21.470**	**20.801**	**0.891**	**0.399**	3 FPS
	HybridStereoNet [64]	Supervised	SCARED	<u>0.309</u>	<u>22.354</u>	<u>21.650</u>	<u>0.887</u>	<u>0.333</u>	3 FPS
	Msdesis [20]	Supervised	SCARED	0.309	22.587	21.653	0.886	0.326	105 FPS
	HRS [62]	Supervised	SCARED	0.318	22.976	22.296	0.871	0.332	45 FPS
	STTR [41,106]	Self-supervised	SCARED	0.369	26.399	25.460	0.202	0.015	4 FPS
	AF-SFMLearner [72]	Self-supervised	SCARED	0.344	23.711	23.787	0.883	0.312	**222 FPS**
	Domain-Gap [107]	Semi-supervised	EndoMapper	0.462	34.442	32.374	0.736	0.033	33 FPS
	Endo-SfMLearner [39]	Self-supervised	EndoSLAM	0.445	35.387	32.149	0.649	0.075	<u>118 FPS</u>
	LINGMI-MR [42]	Supervised	Scenario	0.508	40.317	36.651	0.474	0.089	1 FPS
	M3Depth [69]	Self-supervised	SCARED	0.466	37.183	33.672	0.743	0.069	68 FPS

factors such as data requirements, annotation cost, model robustness, and deployment suitability to highlight practical trade-offs and guide paradigm selection.

Tables 4, 5, 6, and 7 collectively summarize the characteristics and performance trends of the three learning paradigms. Supervised methods typically achieve high accuracy when trained and tested within the same domain, but their dependence on dense annotations and limited generalizability under domain shift constrain practical applicability. Self-supervised approaches eliminate the need for ground-truth depth, offering greater scalability, though their effectiveness relies heavily on the design of photometric, geometric, and temporal constraints. Semi-supervised methods leverage limited labeled data alongside large-scale unlabeled samples, often incorporating domain adaptation or confidence-aware mechanisms to enhance cross-domain robustness.

Each paradigm entails distinct trade-offs. Supervised learning is effective where rich annotations and consistent imaging conditions are available. Self-supervised learning is advantageous in annotation-scarce scenarios demanding scalability. Semi-supervised learning offers a middle ground, particularly suitable for real-world clinical applications involving limited labels and variable domains. The choice of paradigm should be guided by annotation availability, domain variability, and deployment requirements.

5. Challenges and trends

In this study, we provide a comprehensive review of deep learning-based depth estimation methods specifically designed for endoscopic surgery. We discuss their historical evolution, current limitations, and

potential future research directions. The main challenges in this field include the scarcity of labeled datasets, the need for real-time performance, and the requirement for robustness to noise in endoscopic images. Our analysis identifies targeted improvements to address these challenges, offering a clear roadmap for advancing research in endoscopic imaging and depth estimation.

5.1. Dataset limitation

Endoscopic images typically feature non-rigid objects, such as the intestinal wall. Alterations in their shape and position can profoundly impact the accuracy of depth information. Additionally, factors like the imaging quality and field of view angle of endoscopic equipment, along with the camera's resolution, focal length, and sensor characteristics, may also be constrained, further affecting depth estimation accuracy. The non-rigid nature and hardware limitations make obtaining accurate depth data for colon endoscopic images exceedingly challenging. This absence of ground truth complicates training a depth estimation model. Currently, publicly available annotated real datasets are scarce, and synthetic datasets often fall short in robustness tests. Consequently, devising methods to construct more annotated datasets for endoscope depth estimation, or improving the authenticity of synthetic data, has emerged as a crucial area for future research.

Furthermore, existing datasets rarely capture the highly challenging intraoperative conditions frequently encountered in real-world endoscopic procedures, such as bleeding, smoke, and strong specular reflections. These scenarios can severely obscure visual features, introduce unpredictable noise, and significantly degrade the accuracy of depth estimation. The absence of such difficult cases in both training and testing datasets limits the ability to evaluate the robustness of current methods. Therefore, it is essential to develop benchmark datasets that encompass a broader spectrum of realistic surgical conditions, including blood-contaminated, smoky, strong specularities, or tissue deformation, to facilitate the design and validation of more reliable depth estimation models.

5.2. Network architecture

Section **Supervised learning methods** demonstrates that the SMC network architecture can achieve satisfactory results, possibly due to the use of disparity information between two images in binocular stereo vision. This disparity information provides the network with more direct depth cues, enabling the binocular network to more accurately recover the three-dimensional structure of the scene. With the maturation of industrial technology, miniaturization of binocular endoscopy has become feasible. The method of binocular endoscopy depth estimation based on deep learning is an important research direction.

5.3. Real-time performance

In endoscopic depth estimation, real-world applications demand high real-time performance. Yet, to achieve higher accuracy, researchers often develop deep networks with more parameters and constraints, prolonging computation time and hindering real-time feasibility. Hence, exploring lightweight networks for accurate real-time estimation becomes crucial for future research directions.

6. Conclusion

This review methodically compiles public endoscopic datasets to trace the progression and contrast the efficacy of diverse learning methods. It underscores the robust application of cutting-edge techniques, providing an exhaustive evaluation in the domain of endoscopic depth estimation via deep learning. Building upon this groundwork, we propose future research trajectories with the aim of furthering the advancement of endoscopic depth estimation technology and supplying more accurate technical support for clinical applications.

CRediT authorship contribution statement

Xiongzhi Wang: Investigation, Methodology, Validation, Writing – original draft. **Boyu Yang:** Data curation, Writing - review & editing. **Min Wei:** Data curation, Writing - review & editing. **Liangfa Liu:** Data curation, Writing - review & editing. **Jingang Zhang:** Supervision, Writing - review & editing. **Yunfeng Nie:** Conceptualization, Methodology, Supervision, Writing – original draft, review & editing.

Declaration of competing interest

The authors declare that they have no known competing financial interests or personal relationships that could have appeared to influence the work reported in this paper.

Acknowledgments

This work was supported in part by the Equipment Research Program of the Chinese Academy of Sciences under Grant YJKYYQ20180039, in part by the Informatization Plan of the Chinese Academy of Sciences under Grant CASWX2021-PY-0110, in part by the Beijing Natural Science Foundation under Grant JQ22029, and in part by the Major Project of Guangzhou National Laboratory under Grant GZNL2023A03009. Yunfeng Nie acknowledges the Fonds Wetenschappelijk Onderzoek, Belgium for supporting her research (1252722N).

Data availability

No data was used for the research described in the article.

References

[1] K. Fuchs, Minimally invasive surgery, Endoscopy 34 (02) (2002) 154–159.
[2] C.-H. Wu, Y.-N. Sun, C.-C. Chang, Three-dimensional modeling from endoscopic video using geometric constraints via feature positioning, IEEE Trans. Biomed. Eng. 54 (7) (2007) 1199–1211.
[3] T. Vajsbaher, H. Schultheis, N.K. Francis, Spatial cognition in minimally invasive surgery: a systematic review, BMC Surg. 18 (2018) 1–16.
[4] H. Laga, L.V. Jospin, F. Boussaid, M. Bennamoun, A survey on deep learning techniques for stereo-based depth estimation, IEEE Trans. Pattern Anal. Mach. Intell. 44 (4) (2020) 1738–1764.
[5] M.S. Hamid, N. Abd Manap, R.A. Hamzah, A.F. Kadmin, Stereo matching algorithm based on deep learning: A survey, J. King Saud University- Comput. Inf. Sci. 34 (5) (2022) 1663–1673.
[6] L. Chen, S. Chen, Q. Zhou, Q. Cao, Y. Dong, S. Feng, H. Xiao, Y. Wang, X. Liu, G. Liao, et al., Microvascular invasion status and its survival impact in hepatocellular carcinoma depend on tissue sampling protocol, Ann. Surg. Oncol. 28 (2021) 6747–6757.
[7] Y. Xu, L. Feng, Z. Xia, J. Xiong, Camera pose estimation based on feature extraction and description for robotic gastrointestinal endoscopy, in: International Conference on Intelligent Robotics and Applications, Springer, 2021, pp. 113–122.
[8] M. Hayashibe, N. Suzuki, Y. Nakamura, Laser-scan endoscope system for intraoperative geometry acquisition and surgical robot safety management, Med. Image Anal. 10 (4) (2006) 509–519.
[9] L. Yang, J. Wang, T. Ando, A. Kubota, H. Yamashita, I. Sakuma, T. Chiba, E. Kobayashi, Vision-based endoscope tracking for 3D ultrasound image-guided surgical navigation, Comput. Med. Imaging Graph. 40 (2015) 205–216.
[10] R. Furukawa, Y. Sanomura, S. Tanaka, S. Yoshida, R. Sagawa, M. Visentini-Scarzanella, H. Kawasaki, 3D endoscope system using DOE projector, in: 2016 38th Annual International Conference of the IEEE Engineering in Medicine and Biology Society, EMBC, IEEE, 2016, pp. 2091–2094.
[11] J. Lin, N.T. Clancy, Y. Hu, J. Qi, T. Tatla, D. Stoyanov, L. Maier-Hein, D.S. Elson, Endoscopic depth measurement and super-spectral-resolution imaging, in: Medical Image Computing and Computer-Assisted Intervention- MICCAI 2017: 20th International Conference, Quebec City, QC, Canada, September 11-13, 2017, Proceedings, Part II 20, Springer, 2017, pp. 39–47.
[12] X. Chang, S. Lee, Chip-on-the-tip projection design with large depth of focus for structured light 3D endoscopic imaging, J. Image Graph. 3 (2) (2015) 138–143.
[13] D. Hong, W. Tavanapong, J. Wong, J. Oh, P.C. De Groen, 3D reconstruction of virtual colon structures from colonoscopy images, Comput. Med. Imaging Graph. 38 (1) (2014) 22–33.

[14] X. Wu, G. Zheng, Depth estimation for oral cavity by shape from shading with endoscope, in: 2023 IEEE International Conference on Robotics and Automation, ICRA, IEEE, 2023, pp. 2697–2701.

[15] A.R. Widya, Y. Monno, M. Okutomi, S. Suzuki, T. Gotoda, K. Miki, Whole stomach 3D reconstruction and frame localization from monocular endoscope video, IEEE J. Transl. Eng. Heal. Med. 7 (2019) 1–10.

[16] H. Hirschmuller, Accurate and efficient stereo processing by semi-global matching and mutual information, in: 2005 IEEE Computer Society Conference on Computer Vision and Pattern Recognition, CVPR'05, Vol. 2, IEEE, 2005, pp. 807–814.

[17] J. Song, Q. Zhu, J. Lin, M. Ghaffari, BDIS: Bayesian dense inverse searching method for real-time stereo surgical image matching, IEEE Trans. Robot. 39 (2) (2022) 1388–1406.

[18] Z. Yang, R. Simon, C.A. Linte, Disparity refinement framework for learning-based stereo matching methods in cross-domain setting for laparoscopic images, J. Med. Imaging 10 (4) (2023) 045001–045001.

[19] W. Xia, E.C. Chen, S. Pautler, T.M. Peters, A robust edge-preserving stereo matching method for laparoscopic images, IEEE Trans. Med. Imaging 41 (7) (2022) 1651–1664.

[20] D. Psychogyios, E. Mazomenos, F. Vasconcelos, D. Stoyanov, MSDESIS: Multitask stereo disparity estimation and surgical instrument segmentation, IEEE Trans. Med. Imaging 41 (11) (2022) 3218–3230.

[21] Z. Yang, J. Dai, J. Pan, 3D reconstruction from endoscopy images: A survey, Comput. Biol. Med. (2024) 108546.

[22] A. Jan, S. Khan, S. Seo, Deep learning-based depth map estimation: A review, Korean J. Remote. Sens 39 (2023) 1–21.

[23] V. Arampatzakis, G. Pavlidis, N. Mitianoudis, N. Papamarkos, Monocular depth estimation: A thorough review, IEEE Trans. Pattern Anal. Mach. Intell. (2023).

[24] T. Samavati, M. Soryani, Deep learning-based 3D reconstruction: a survey, Artif. Intell. Rev. 56 (9) (2023) 9175–9219.

[25] L. Zhou, G. Wu, Y. Zuo, X. Chen, H. Hu, A comprehensive review of vision-based 3D reconstruction methods, Sensors 24 (7) (2024) 2314.

[26] A. Saxena, S. Chung, A. Ng, Learning depth from single monocular images, Adv. Neural Inf. Process. Syst. 18 (2005).

[27] R. Garg, V.K. Bg, G. Carneiro, I. Reid, Unsupervised cnn for single view depth estimation: Geometry to the rescue, in: Computer Vision–ECCV 2016: 14th European Conference, Amsterdam, the Netherlands, October 11-14, 2016, Proceedings, Part VIII 14, Springer, 2016, pp. 740–756.

[28] K. Pogorelov, K.R. Randel, C. Griwodz, S.L. Eskeland, T. de Lange, D. Johansen, C. Spampinato, D.-T. Dang-Nguyen, M. Lux, P.T. Schmidt, et al., Kvasir: A multi-class image dataset for computer aided gastrointestinal disease detection, in: Proceedings of the 8th ACM on Multimedia Systems Conference, 2017, pp. 164–169.

[29] M. Ye, E. Johns, A. Handa, L. Zhang, P. Pratt, G.-Z. Yang, Self-supervised siamese learning on stereo image pairs for depth estimation in robotic surgery, 2017, arXiv preprint arXiv:1705.08260.

[30] V. Penza, A.S. Ciullo, S. Moccia, L.S. Mattos, E. De Momi, Endoabs dataset: Endoscopic abdominal stereo image dataset for benchmarking 3d stereo reconstruction algorithms, Int. J. Med. Robot. Comput. Assist. Surg. 14 (5) (2018) e1926.

[31] M. Allan, A. Shvets, T. Kurmann, Z. Zhang, R. Duggal, Y.-H. Su, N. Rieke, I. Laina, N. Kalavakonda, S. Bodenstedt, et al., 2017 robotic instrument segmentation challenge, 2019, arXiv preprint arXiv:1902.06426.

[32] A. Rau, P.E. Edwards, O.F. Ahmad, P. Riordan, M. Janatka, L.B. Lovat, D. Stoyanov, Implicit domain adaptation with conditional generative adversarial networks for depth prediction in endoscopy, Int. J. Comput. Assist. Radiol. Surg. 14 (2019) 1167–1176.

[33] M. Allan, S. Kondo, S. Bodenstedt, S. Leger, R. Kadkhodamohammadi, I. Luengo, F. Fuentes, E. Flouty, A. Mohammed, M. Pedersen, et al., 2018 robotic scene segmentation challenge, 2020, arXiv preprint arXiv:2001.11190.

[34] D. Jha, P.H. Smedsrud, M.A. Riegler, P. Halvorsen, T. De Lange, D. Johansen, H.D. Johansen, Kvasir-seg: A segmented polyp dataset, in: MultiMedia Modeling: 26th International Conference, MMM 2020, Daejeon, South Korea, January 5–8, 2020, Proceedings, Part II 26, Springer, 2020, pp. 451–462.

[35] H. Borgli, V. Thambawita, P.H. Smedsrud, S. Hicks, D. Jha, S.L. Eskeland, K.R. Randel, K. Pogorelov, M. Lux, D.T.D. Nguyen, et al., HyperKvasir, a comprehensive multi-class image and video dataset for gastrointestinal endoscopy, Sci. Data 7 (1) (2020) 283.

[36] P. Eddie"Edwards, D. Psychogyios, S. Speidel, L. Maier-Hein, D. Stoyanov, SERV-CT: A disparity dataset from CT for validation of endoscopic 3D reconstruction, 2020, arXiv E-Prints, arXiv–2012.

[37] Y. Ma, X. Chen, K. Cheng, Y. Li, B. Sun, LdPolypVideo benchmark: a large-scale colonoscopy video dataset of diverse polyps, in: Medical Image Computing and Computer Assisted Intervention–MICCAI 2021: 24th International Conference, Strasbourg, France, September 27–October 1, 2021, Proceedings, Part V 24, Springer, 2021, pp. 387–396.

[38] S. Zhang, L. Zhao, S. Huang, R. Ma, B. Hu, Q. Hao, 3D reconstruction of deformable colon structures based on preoperative model and deep neural network, in: 2021 IEEE International Conference on Robotics and Automation, ICRA, IEEE, 2021, pp. 1875–1881.

[39] K.B. Ozyoruk, G.I. Gokceler, T.L. Bobrow, G. Coskun, K. Incetan, Y. Almalioglu, F. Mahmood, E. Curto, L. Perdigoto, M. Oliveira, et al., EndoSLAM dataset and an unsupervised monocular visual odometry and depth estimation approach for endoscopic videos, Med. Image Anal. 71 (2021) 102058.

[40] M. Allan, J. Mcleod, C. Wang, J.C. Rosenthal, Z. Hu, N. Gard, P. Eisert, K.X. Fu, T. Zeffiro, W. Xia, et al., Stereo correspondence and reconstruction of endoscopic data challenge, 2021, arXiv preprint arXiv:2101.01133.

[41] Y. Wang, Y. Long, S.H. Fan, Q. Dou, Neural rendering for stereo 3d reconstruction of deformable tissues in robotic surgery, in: International Conference on Medical Image Computing and Computer-Assisted Intervention, Springer, 2022, pp. 431–441.

[42] Y. Yang, S. Shao, T. Yang, P. Wang, Z. Yang, C. Wu, H. Liu, A geometry-aware deep network for depth estimation in monocular endoscopy, Eng. Appl. Artif. Intell. 122 (2023) 105989.

[43] M. Hayoz, C. Hahne, M. Gallardo, D. Candinas, T. Kurmann, M. Allan, R. Sznitman, Learning how to robustly estimate camera pose in endoscopic videos, Int. J. Comput. Assist. Radiol. Surg. (2023) 1–8.

[44] P. Azagra, C. Sostres, Á. Ferrández, L. Riazuelo, C. Tomasini, O.L. Barbed, J. Morlana, D. Recasens, V.M. Batlle, J.J. Gómez-Rodríguez, et al., Endomapper dataset of complete calibrated endoscopy procedures, Sci. Data 10 (1) (2023) 671.

[45] A. Rau, B. Bhattarai, L. Agapito, D. Stoyanov, Bimodal camera pose prediction for endoscopy, IEEE Trans. Med. Robot. Bionics (2023).

[46] T.L. Bobrow, M. Golhar, R. Vijayan, V.S. Akshintala, J.R. Garcia, N.J. Durr, Colonoscopy 3D video dataset with paired depth from 2D-3D registration, Med. Image Anal. (2023) 102956.

[47] D. Eigen, C. Puhrsch, R. Fergus, Depth map prediction from a single image using a multi-scale deep network, Adv. Neural Inf. Process. Syst. 27 (2014).

[48] B. Antal, Automatic 3d point set reconstruction from stereo laparoscopic images using deep neural networks, 2016, arXiv preprint arXiv:1608.00203.

[49] F. Mahmood, N.J. Durr, Deep learning and conditional random fields-based depth estimation and topographical reconstruction from conventional endoscopy, Med. Image Anal. 48 (2018) 230–243.

[50] F. Mahmood, N.J. Durr, Deep learning-based depth estimation from a synthetic endoscopy image training set, in: Medical Imaging 2018: Image Processing, Vol. 10574, SPIE, 2018, pp. 521–526.

[51] F. Mahmood, N.J. Durr, Topographical reconstructions from monocular optical colonoscopy images via deep learning, in: 2018 IEEE 15th International Symposium on Biomedical Imaging, ISBI 2018, IEEE, 2018, pp. 216–219.

[52] M. Visentini-Scarzanella, T. Sugiura, T. Kaneko, S. Koto, Deep monocular 3D reconstruction for assisted navigation in bronchoscopy, Int. J. Comput. Assist. Radiol. Surg. 12 (2017) 1089–1099.

[53] M. Oda, H. Itoh, K. Tanaka, H. Takabatake, M. Mori, H. Natori, K. Mori, Depth estimation from single-shot monocular endoscope image using image domain adaptation and edge-aware depth estimation, Comput. Methods Biomech. Biomed. Eng.: Imaging & Vis. 10 (3) (2022) 266–273.

[54] X. Wang, X. Meng, Research on endoscopic image depth estimation method based on deep learning, in: 2023 2nd International Conference on Artificial Intelligence and Blockchain Technology, AIBT, IEEE, 2023, pp. 33–36.

[55] R. Ranftl, A. Bochkovskiy, V. Koltun, Vision transformers for dense prediction, in: Proceedings of the IEEE/CVF International Conference on Computer Vision, 2021, pp. 12179–12188.

[56] Y. Lu, R. Wei, B. Li, W. Chen, J. Zhou, Q. Dou, D. Sun, Y.-h. Liu, Autonomous intelligent navigation for flexible endoscopy using monocular depth guidance and 3-D shape planning, 2023, arXiv preprint arXiv:2302.13219.

[57] M. Shen, Y. Gu, N. Liu, G.-Z. Yang, Context-aware depth and pose estimation for bronchoscopic navigation, IEEE Robot. Autom. Lett. 4 (2) (2019) 732–739.

[58] X.-Z. Wang, Y. Nie, S.-P. Lu, J. Zhang, Deep convolutional network for stereo depth mapping in binocular endoscopy, IEEE Access 8 (2020) 73241–73249.

[59] X. Wang, Y. Nie, W. Ren, M. Wei, J. Zhang, Multi-scale, multi-dimensional binocular endoscopic image depth estimation network, Comput. Biol. Med. 164 (2023) 107305.

[60] H. Yu, C. Zhou, W. Zhang, L. Wang, Q. Yang, B. Yuan, A three-dimensional measurement method for binocular endoscopes based on deep learning, Front. Inf. Technol. Electron. Eng. 23 (4) (2022) 653–660.

[61] S. Zhao, C. Wang, Q. Wang, Y. Liu, S.K. Zhou, 3D endoscopic depth estimation using 3D surface-aware constraints, 2022, arXiv preprint arXiv:2203.02131.

[62] R. Wei, B. Li, H. Mo, B. Lu, Y. Long, B. Yang, Q. Dou, Y. Liu, D. Sun, Stereo dense scene reconstruction and accurate localization for learning-based navigation of laparoscope in minimally invasive surgery, IEEE Trans. Biomed. Eng. 70 (2) (2022) 488–500.

[63] Y. Long, Z. Li, C.H. Yee, C.F. Ng, R.H. Taylor, M. Unberath, Q. Dou, E-dssr: efficient dynamic surgical scene reconstruction with transformer-based stereoscopic depth perception, in: Medical Image Computing and Computer Assisted Intervention–MICCAI 2021: 24th International Conference, Strasbourg, France, September 27–October 1, 2021, Proceedings, Part IV 24, Springer, 2021, pp. 415–425.

[64] X. Cheng, Y. Zhong, M. Harandi, T. Drummond, Z. Wang, Z. Ge, Deep laparoscopic stereo matching with transformers, in: International Conference on Medical Image Computing and Computer-Assisted Intervention, Springer, 2022, pp. 464–474.

[65] D. Recasens, J. Lamarca, J.M. Fácil, J. Montiel, J. Civera, Endo-depth-and-motion: Reconstruction and tracking in endoscopic videos using depth networks and photometric constraints, IEEE Robot. Autom. Lett. 6 (4) (2021) 7225–7232.

[66] Y. Liu, S. Zuo, Self-supervised monocular depth estimation for gastrointestinal endoscopy, Comput. Methods Programs Biomed. (2023) 107619.

[67] R. Tao, B. Huang, X. Zou, G. Zheng, SVT-SDE: Spatiotemporal vision transformers-based self-supervised depth estimation in stereoscopic surgical videos, IEEE Trans. Med. Robot. Bionics 5 (1) (2023) 42–53.

[68] Z. Yang, J. Pan, J. Dai, Z. Sun, Y. Xiao, Self-supervised endoscopy depth estimation framework with CLIP-guidance segmentation, Biomed. Signal Process. Control. 95 (2024) 106410.

[69] B. Huang, J.-Q. Zheng, A. Nguyen, C. Xu, I. Gkouzionis, K. Vyas, D. Tuch, S. Giannarou, D.S. Elson, Self-supervised depth estimation in laparoscopic image using 3D geometric consistency, in: International Conference on Medical Image Computing and Computer-Assisted Intervention, Springer, 2022, pp. 13–22.

[70] Y. Li, D. Chang, D. Luo, J. Huang, L. Dong, D. Wang, L. Mei, C. Lei, SfMDiffusion: self-supervised monocular depth estimation in endoscopy based on diffusion models, Int. J. Comput. Assist. Radiol. Surg. (2025) 1–9.

[71] Z. Yang, R. Simon, Y. Li, C.A. Linte, Dense depth estimation from stereo endoscopy videos using unsupervised optical flow methods, in: Medical Image Understanding and Analysis: 25th Annual Conference, MIUA 2021, Oxford, United Kingdom, July 12–14, 2021, Proceedings 25, Springer, 2021, pp. 337–349.

[72] S. Shao, Z. Pei, W. Chen, W. Zhu, X. Wu, D. Sun, B. Zhang, Self-supervised monocular depth and ego-motion estimation in endoscopy: Appearance flow to the rescue, Med. Image Anal. 77 (2022) 102338.

[73] S. Shao, Z. Pei, W. Chen, X. Wu, Z. Liu, Z. Li, SMUDLP: Self-teaching multi-frame unsupervised endoscopic depth estimation with learnable patchmatch, 2022, arXiv preprint arXiv:2205.15034.

[74] F. Bardozzo, T. Collins, A. Forgione, A. Hostettler, R. Tagliaferri, StaSiS-Net: A stacked and siamese disparity estimation network for depth reconstruction in modern 3D laparoscopy, Med. Image Anal. 77 (2022) 102380.

[75] H. Luo, C. Wang, X. Duan, H. Liu, P. Wang, Q. Hu, F. Jia, Unsupervised learning of depth estimation from imperfect rectified stereo laparoscopic images, Comput. Biol. Med. 140 (2022) 105109.

[76] F. Mahmood, R. Chen, N.J. Durr, Unsupervised reverse domain adaptation for synthetic medical images via adversarial training, IEEE Trans. Med. Imaging 37 (12) (2018) 2572–2581.

[77] K. Xu, Z. Chen, F. Jia, Unsupervised binocular depth prediction network for laparoscopic surgery, Comput. Assist. Surg. 24 (sup1) (2019) 30–35.

[78] B. Li, B. Lu, Y. Lu, Q. Dou, Y.-H. Liu, Data-driven holistic framework for automated laparoscope optimal view control with learning-based depth perception, in: 2021 IEEE International Conference on Robotics and Automation, ICRA, IEEE, 2021, pp. 12366–12372.

[79] N. Chong, F. Yang, A monocular medical endoscopic images depth estimation method based on a confidence-guided dual-branch siamese network, Biomed. Signal Process. Control. 102 (2025) 107123.

[80] H. Yang, L.A. Kahrs, Real-time coarse-to-fine depth estimation on stereo endoscopic images with self-supervised learning, in: 2021 IEEE 18th International Symposium on Biomedical Imaging, ISBI, IEEE, 2021, pp. 733–737.

[81] B. Huang, J.-Q. Zheng, A. Nguyen, D. Tuch, K. Vyas, S. Giannarou, D.S. Elson, Self-supervised generative adversarial network for depth estimation in laparoscopic images, in: Medical Image Computing and Computer Assisted Intervention–MICCAI 2021: 24th International Conference, Strasbourg, France, September 27–October 1, 2021, Proceedings, Part IV 24, Springer, 2021, pp. 227–237.

[82] K. Cheng, Y. Ma, B. Sun, Y. Li, X. Chen, Depth estimation for colonoscopy images with self-supervised learning from videos, in: Medical Image Computing and Computer Assisted Intervention–MICCAI 2021: 24th International Conference, Strasbourg, France, September 27–October 1, 2021, Proceedings, Part VI 24, Springer, 2021, pp. 119–128.

[83] C. Xu, B. Huang, D.S. Elson, Self-supervised monocular depth estimation with 3-D displacement module for laparoscopic images, IEEE Trans. Med. Robot. Bionics 4 (2) (2022) 331–334.

[84] S. Mathew, S. Nadeem, S. Kumari, A. Kaufman, Augmenting colonoscopy using extended and directional cyclegan for lossy image translation, in: Proceedings of the IEEE/CVF Conference on Computer Vision and Pattern Recognition, 2020, pp. 4696–4705.

[85] H. Itoh, M. Oda, Y. Mori, M. Misawa, S.-E. Kudo, K. Imai, S. Ito, K. Hotta, H. Takabatake, M. Mori, et al., Unsupervised colonoscopic depth estimation by domain translations with a lambertian-reflection keeping auxiliary task, Int. J. Comput. Assist. Radiol. Surg. 16 (6) (2021) 989–1001.

[86] J.H. Yoon, M.-G. Park, Y. Hwang, K.-J. Yoon, Learning depth from endoscopic images, in: 2019 International Conference on 3D Vision, 3DV, IEEE, 2019, pp. 126–134.

[87] G. Zhang, Z. Huang, J. Lin, Z. Li, E. Cao, Y. Pang, et al., A 3D reconstruction based on an unsupervised domain adaptive for binocular endoscopy, Front. Physiol. (2022) 1734.

[88] S. Tukra, S. Giannarou, Stereo depth estimation via self-supervised contrastive representation learning, in: International Conference on Medical Image Computing and Computer-Assisted Intervention, Springer, 2022, pp. 604–614.

[89] L. Xi, Y. Zhao, L. Chen, Q.H. Gao, W. Tang, T.R. Wan, T. Xue, Recovering dense 3D point clouds from single endoscopic image, Comput. Methods Programs Biomed. 205 (2021) 106077.

[90] S. Tukra, S. Giannarou, Randomly connected neural networks for self-supervised monocular depth estimation, Comput. Methods Biomech. Biomed. Eng.: Imaging & Vis. 10 (4) (2022) 390–399.

[91] M. Turan, E.P. Ornek, N. Ibrahimli, C. Giracoglu, Y. Almalioglu, M.F. Yanik, M. Sitti, Unsupervised odometry and depth learning for endoscopic capsule robots, in: 2018 IEEE/RSJ International Conference on Intelligent Robots and Systems, IROS, IEEE, 2018, pp. 1801–1807.

[92] T. Zhou, M. Brown, N. Snavely, D.G. Lowe, Unsupervised learning of depth and ego-motion from video, in: IEEE Conf. Comput. Vis. Pattern Recog., 2017, pp. 1851–1858.

[93] S. Shao, Z. Pei, W. Chen, B. Zhang, X. Wu, D. Sun, D. Doermann, Self-supervised learning for monocular depth estimation on minimally invasive surgery scenes, in: 2021 IEEE International Conference on Robotics and Automation, ICRA, IEEE, 2021, pp. 7159–7165.

[94] S.-J. Hwang, S.-J. Park, G.-M. Kim, J.-H. Baek, Unsupervised monocular depth estimation for colonoscope system using feedback network, Sensors 21 (8) (2021) 2691.

[95] J. Wu, Y. Gu, Unleashing the power of depth and pose estimation neural networks by designing compatible endoscopic images, 2023, arXiv preprint arXiv:2309.07390.

[96] L. Li, X. Li, S. Yang, S. Ding, A. Jolfaei, X. Zheng, Unsupervised-learning-based continuous depth and motion estimation with monocular endoscopy for virtual reality minimally invasive surgery, IEEE Trans. Ind. Inform. 17 (6) (2020) 3920–3928.

[97] A.R. Widya, Y. Monno, M. Okutomi, S. Suzuki, T. Gotoda, K. Miki, Learning-based depth and pose estimation for monocular endoscope with loss generalization, in: 2021 43rd Annual International Conference of the IEEE Engineering in Medicine & Biology Society, EMBC, IEEE, 2021, pp. 3547–3552.

[98] S. Liu, J. Fan, D. Song, T. Fu, Y. Lin, D. Xiao, H. Song, Y. Wang, J. Yang, Joint estimation of depth and motion from a monocular endoscopy image sequence using a multi-loss rebalancing network, Biomed. Opt. Express 13 (5) (2022) 2707–2727.

[99] C. Liao, C. Wang, P. Wang, H. Wu, H. Wang, Self-supervised learning of monocular depth and ego-motion estimation for non-rigid scenes in wireless capsule endoscopy videos, Biomed. Signal Process. Control. 91 (2024) 105978.

[100] H. Shi, Z. Wang, Y. Zhou, D. Li, X. Yang, Q. Li, Bidirectional semi-supervised dual-branch CNN for robust 3D reconstruction of stereo endoscopic images via adaptive cross and parallel supervisions, IEEE Trans. Med. Imaging (2023).

[101] M.A. Karaoglu, N. Brasch, M. Stollenga, W. Wein, N. Navab, F. Tombari, A. Ladikos, Adversarial domain feature adaptation for bronchoscopic depth estimation, in: Medical Image Computing and Computer Assisted Intervention–MICCAI 2021: 24th International Conference, Strasbourg, France, September 27–October 1, 2021, Proceedings, Part IV 24, Springer, 2021, pp. 300–310.

[102] B.H. Jeong, H.K. Kim, Y.D. Son, Depth estimation of endoscopy using sim-to-real transfer, 2021, arXiv preprint arXiv:2112.13595.

[103] Y. Yang, G. Ning, C. Zhong, H. Liao, Adversarial diffusion model for domain-adaptive depth estimation in bronchoscopic navigation, in: International Conference on Medical Image Computing and Computer-Assisted Intervention, Springer, 2024, pp. 46–56.

[104] R. Liu, Z. Liu, H. Zhang, G. Zhang, Z. Zuo, W. Sheng, Dense depth completion based on multi-scale confidence and self-attention mechanism for intestinal endoscopy, in: 2023 IEEE International Conference on Robotics and Automation, ICRA, IEEE, 2023, pp. 7476–7482.

[105] R. Liu, Z. Liu, J. Lu, G. Zhang, Z. Zuo, B. Sun, J. Zhang, W. Sheng, R. Guo, L. Zhang, et al., Sparse-to-dense coarse-to-fine depth estimation for colonoscopy, Comput. Biol. Med. 160 (2023) 106983.

[106] Z. Li, X. Liu, N. Drenkow, A. Ding, F.X. Creighton, R.H. Taylor, M. Unberath, Revisiting stereo depth estimation from a sequence-to-sequence perspective with transformers, in: Proceedings of the IEEE/CVF International Conference on Computer Vision, 2021, pp. 6197–6206.

[107] A. Rau, B. Bhattarai, L. Agapito, D. Stoyanov, Task-guided domain gap reduction for monocular depth prediction in endoscopy, in: MICCAI Workshop on Data Engineering in Medical Imaging, Springer, 2023, pp. 111–122.