Resonate Model Architecture

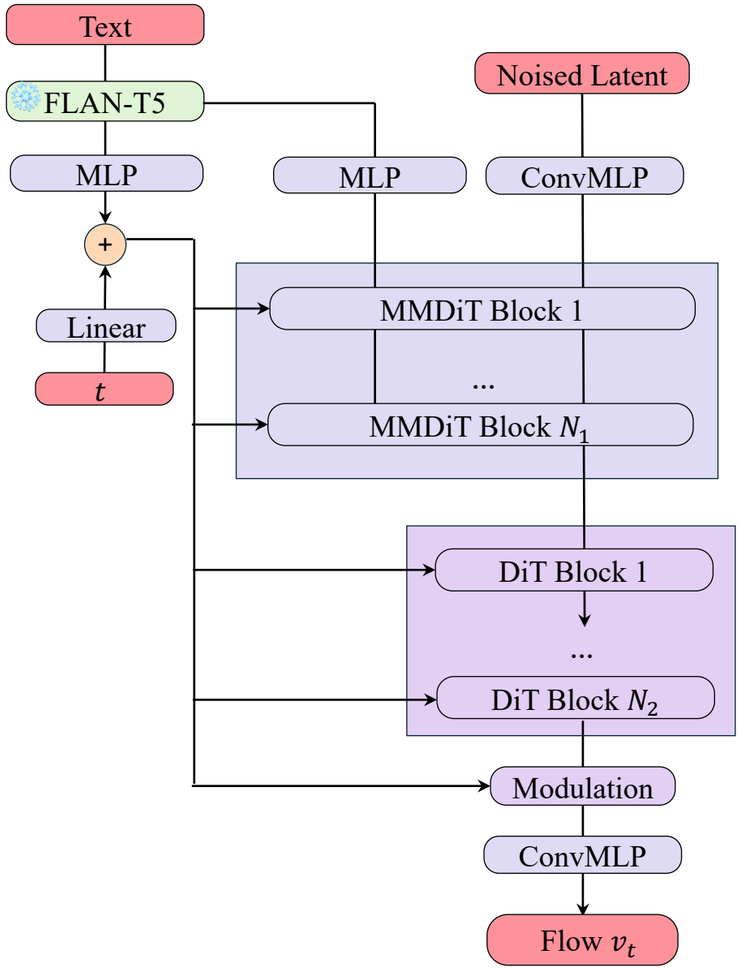
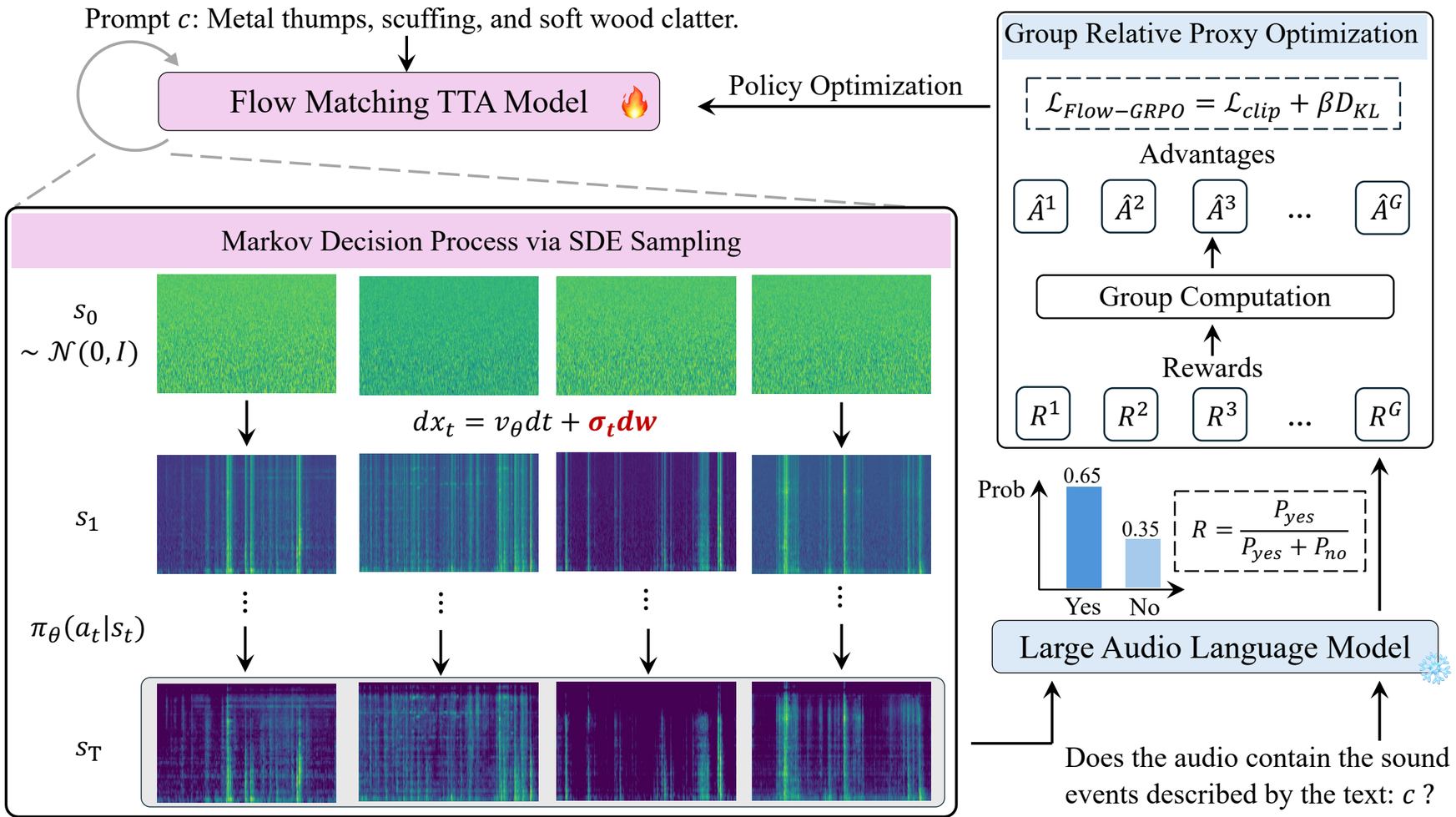
Flow-GRPO Training Paradigm