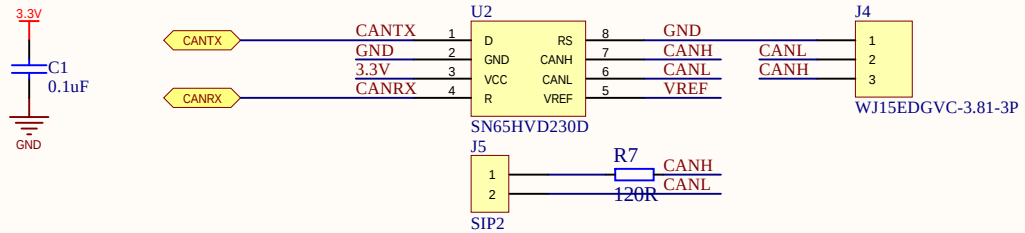
3.3V
C1
0.1uF
GND
CANTX
CANRX
CANTX
GND
3.3V
CANRX
1
2
3
4
U2
D
GND
VCC
R
RS
CANH
CANL
VREF
8
7
6
5
SN65HVD230D
GND
CANH
CANL
VREF
CANL
CANH
J4
1
2
3
WJ15EDGVC-3.81-3P
J5
1
2
SIP2
R7
120R
CANH
CANL

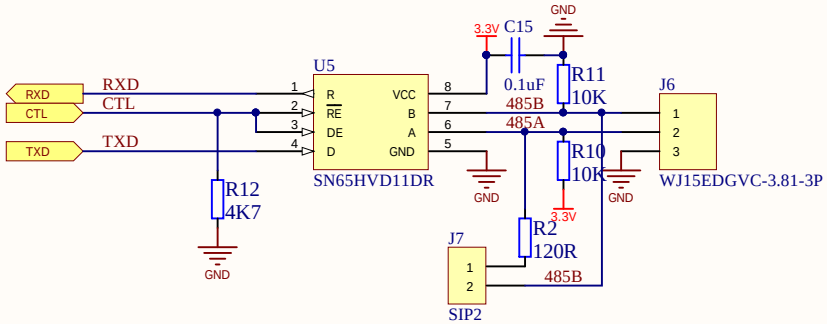
RXD
CTL
TXD
RXD
CTL
TXD
U5
R
RE
DE
D
VCC
B
A
GND
SN65HVD11DR
1
2
3
4
8
7
6
5
3.3V
C15
0.1uF
GND
R11
10K
485B
485A
R10
10K
3.3V
GND
GND
J6
1
2
3
WJ15EDGVC-3.81-3P
R12
4K7
GND
J7
1
2
SIP2
R2
120R
485B

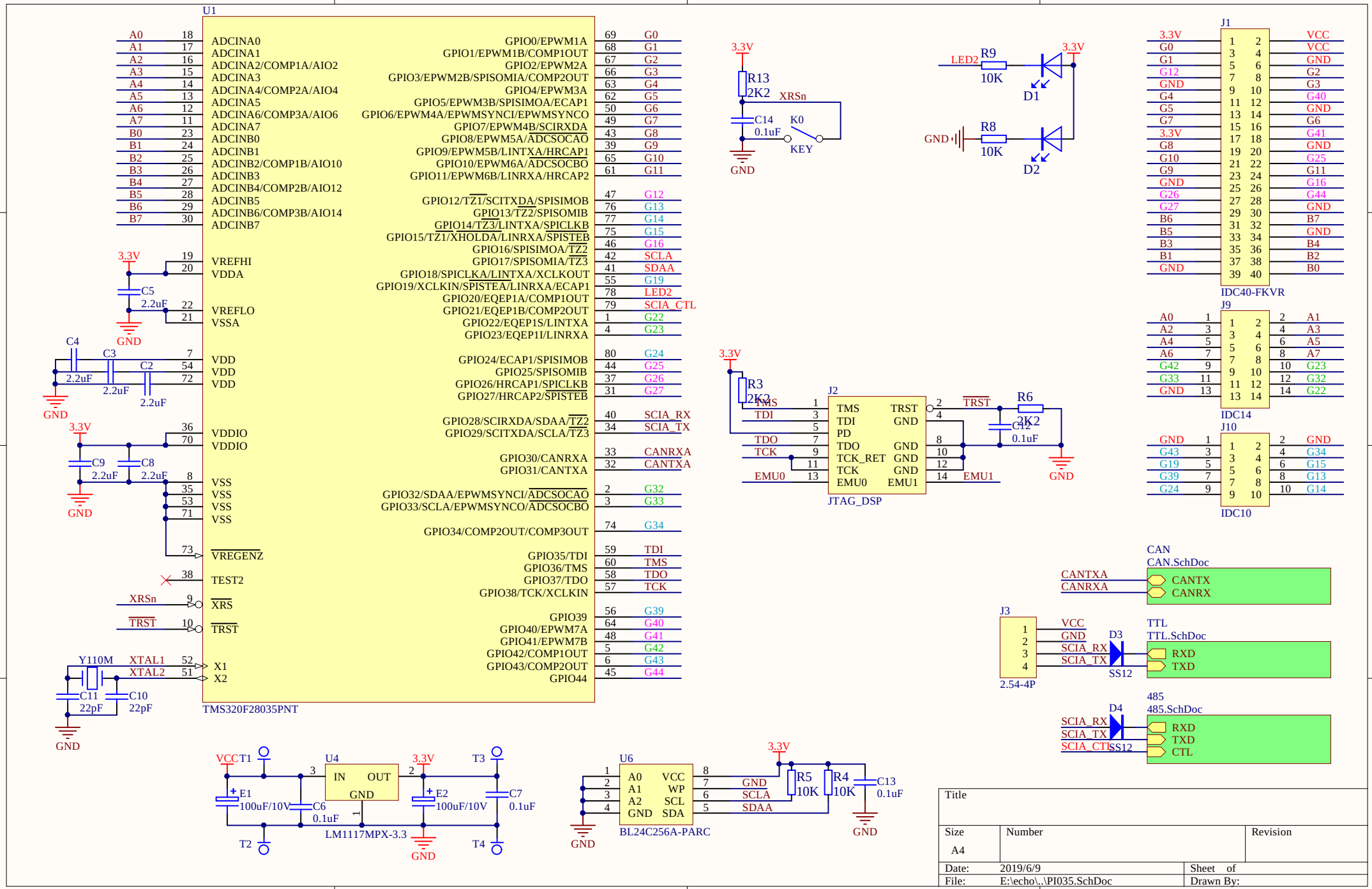
U1
TMS320F28035PNT
ADCINA0
ADCINA1
ADCINA2/COMP1A/AIO2
ADCINA3
ADCINA4/COMP2A/AIO4
ADCINA5
ADCINA6/COMP3A/AIO6
ADCINA7
ADCINB0
ADCINB1
ADCINB2/COMP1B/AIO10
ADCINB3
ADCINB4/COMP2B/AIO12
ADCINB5
ADCINB6/COMP3B/AIO14
ADCINB7
VREFHI
VDDA
VREFLO
VSSA
VDD
VDDIO
VSS
VREGENZ
TEST2
XRS
TRST
X1
X2
GPIO0/EPWM1A
GPIO1/EPWM1B/COMP1OUT
GPIO2/EPWM2A
GPIO3/EPWM2B/SPISOMIA/COMP2OUT
GPIO4/EPWM3A
GPIO5/EPWM3B/SPISIMOA/ECAP1
GPIO6/EPWM4A/EPWMSYNCI/EPWMSYNCO
GPIO7/EPWM4B/SCIRXDA
GPIO8/EPWM5A/ADCSOCAO
GPIO9/EPWM5B/LINTXA/HRCAP1
GPIO10/EPWM6A/ADCSOCBO
GPIO11/EPWM6B/LINRXA/HRCAP2
GPIO12/TZ1/SCITXDA/SPISIMOB
GPIO13/TZ2/SPISOMIB
GPIO14/TZ3/LINTXA/SPICLKB
GPIO15/TZ1/XHOLDA/LINRXA/SPISTEB
GPIO16/SPISIMOA/TZ2
GPIO17/SPISOMIA/TZ3
GPIO18/SPICLKA/LINTXA/XCLKOUT
GPIO19/XCLKIN/SPISTEA/LINRXA/ECAP1
GPIO20/EQEP1A/COMP1OUT
GPIO21/EQEP1B/COMP2OUT
GPIO22/EQEP1S/LINTXA
GPIO23/EQEP1I/LINRXA
GPIO24/ECAP1/SPISIMOB
GPIO25/SPISOMIB
GPIO26/HRCAP1/SPICLKB
GPIO27/HRCAP2/SPISTEB
GPIO28/SCIRXDA/SDAA/TZ2
GPIO29/SCITXDA/SCLA/TZ3
GPIO30/CANRXA
GPIO31/CANTXA
GPIO32/SDAA/EPWMSYNCI/ADCSOCAO
GPIO33/SCLA/EPWMSYNCO/ADCSOCBO
GPIO34/COMP2OUT/COMP3OUT
GPIO35/TDI
GPIO36/TMS
GPIO37/TDO
GPIO38/TCK/XCLKIN
GPIO39
GPIO40/EPWM7A
GPIO41/EPWM7B
GPIO42/COMP1OUT
GPIO43/COMP2OUT
GPIO44
3.3V
GND
C5 2.2uF
C4 2.2uF
C3 2.2uF
C2 2.2uF
C9 2.2uF
C8 2.2uF
XRSn
TRST
Y110M
XTAL1
XTAL2
C11 22pF
C10 22pF
R13 2K2
C14 0.1uF
K0
KEY
LED2
R9 10K
D1
R8 10K
D2
J1
IDC40-FKVR
J9
IDC14
J10
IDC10
R3 2K2
J2
JTAG_DSP
TMS
TDI
TDO
TCK
EMU0
TRST
EMU1
R6 2K2
C12 0.1uF
J3
2.54-4P
VCC
SCIA_RX
SCIA_TX
D3
SS12
CAN
CAN.SchDoc
CANTXA
CANRXA
CANTX
CANRX
TTL
TTL.SchDoc
RXD
TXD
D4
485
485.SchDoc
SCIA_CTL
CTL
VCC
T1
T2
T3
T4
U4
IN
OUT
GND
E1 100uF/10V
C6 0.1uF
E2 100uF/10V
C7 0.1uF
LM1117MPX-3.3
U6
A0
A1
A2
GND
VCC
WP
SCL
SDA
BL24C256A-PARC
R5 10K
R4 10K
C13 0.1uF
Title
Size
A4
Number
Revision
Date: 2019/6/9
Sheet of
File: E:\echo\..\PI035.SchDoc
Drawn By:

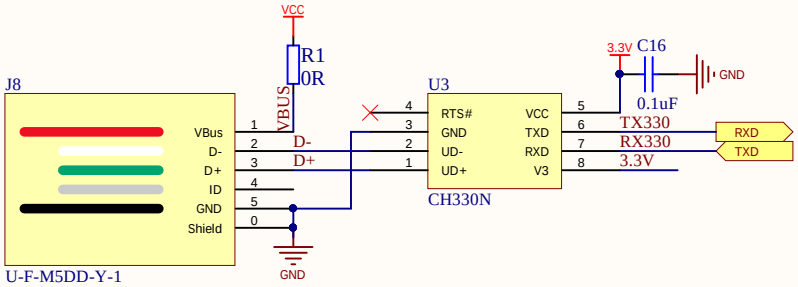
VCC
R1
0R
VBUS
J8
VBus
D-
D+
ID
GND
Shield
1
2
3
4
5
0
U-F-M5DD-Y-1
GND
D-
D+
U3
RTS#
GND
UD-
UD+
VCC
TXD
RXD
V3
4
3
2
1
5
6
7
8
CH330N
3.3V
C16
0.1uF
GND
TX330
RX330
3.3V
RXD
TXD