Model Name: H915G *Revision 1.1*

SHEET	TITLE
01	COVER SHEET
02	BLOCK DIAGRAM
03	BOM & PCB MODIFY HISTORY
04	P4_LGA775_A
05	P4_LGA775_B
06	P4_LGA775_C
07	P4_LGA775_D
08	VCORE POWER
09	GMCH-GRANTSDALE_HOST
10	GMCH-GARNTSDALE_DDR
11	GMCH-GRANTSDALE_PCI E, DMI
12	GMCH-GRANTSDALE_INT VGA
13	GMCH-GRANTSDALE_GND
14	GMCH-GRANTSDALE_PWR
15	DDR CHANNEL A
16	DDR CHANNEL B
17	DDR TERMINATION
18	PCI EXPRESS*16 SLOT
19	ICH6 PCI, USB, DMI, LAN
20	ICH6 IDE, GPIO, SATA, CTRL
21	ICH6 VCC, GND
22	FWH

SHEET	TITLE
23	CK410M CLOCK.
24	PCI SLOT 1, 2
25	PCI EXPRESS*1 SLOT 1,2,3
26	ITE8712HX
27	HWMO
28	IDE
29	KB_PS2 & IR
30	COM_LPT
31	FRONT USB CONNECTOR
32	CPU_FAN & SYS_FAN
33	ALC880 / ALC658
34	AUDIO JACK
35	AZALIA CODEC ALC880
36	ATX POWER CONN.
37	ALL POWER
38	POLY S/W
39	FRONT PANEL
40	REAR USBCONNECTOR
41	ONBOARD LAN
42	RESERVED
43	RESERVED
44	

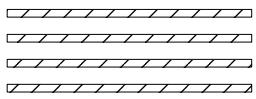

Topstar ShenZhen Topstar Inductor Co.,Ltd

Page Name: Cover Sheet

Size: Custom | Project Name: GDDR1 | Rev: 1.1

Date: Tuesday, December 28, 2004 | Sheet 1 of 43

PROPERTY NOTE: This document contains information confidential and property to TOPSTAR and shall not be reproduced or transferred to other documents or disclosed to others or used for any purpose other than that for which it was obtained without the expressed written consent of TOPSTAR

PDF created with pdfFactory trial version www.pdffactory.com

BLOCK DIAGRAM

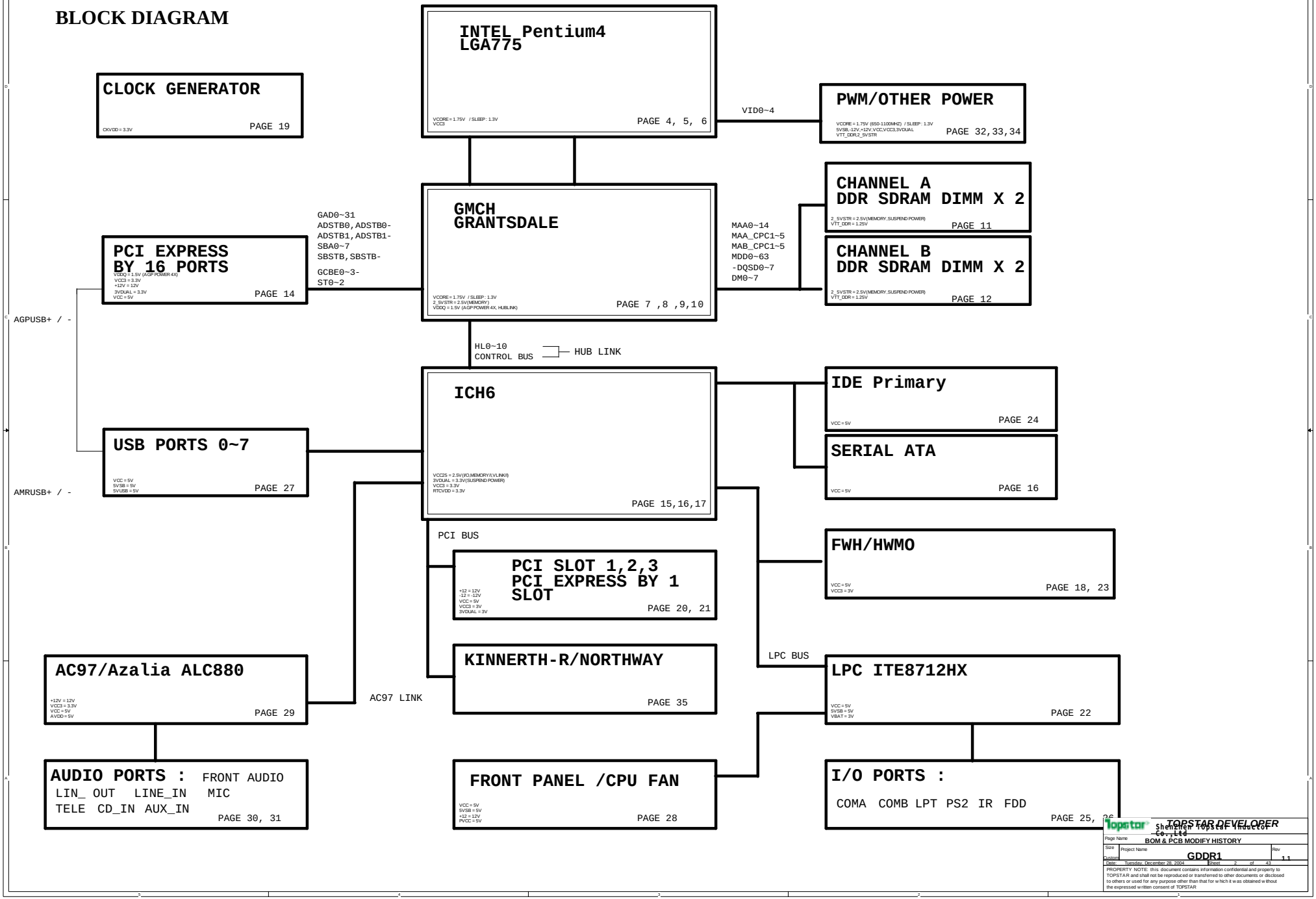

PDF created with pdfFactory trial version www.pdffactory.com

Model Name: H915G
Version: 1.1

Component value change history

Data	Change Item	Reason
	CHANGE CLOCK SOLUTION	
	CHANGE AUDIO TO AC97	
	change TESHI0 pull up	
	change LG775 PIN H29 NET "GTL_DET"	
	change GMCH "MCH_GTLREF" config	
	correct "-FPE" net	

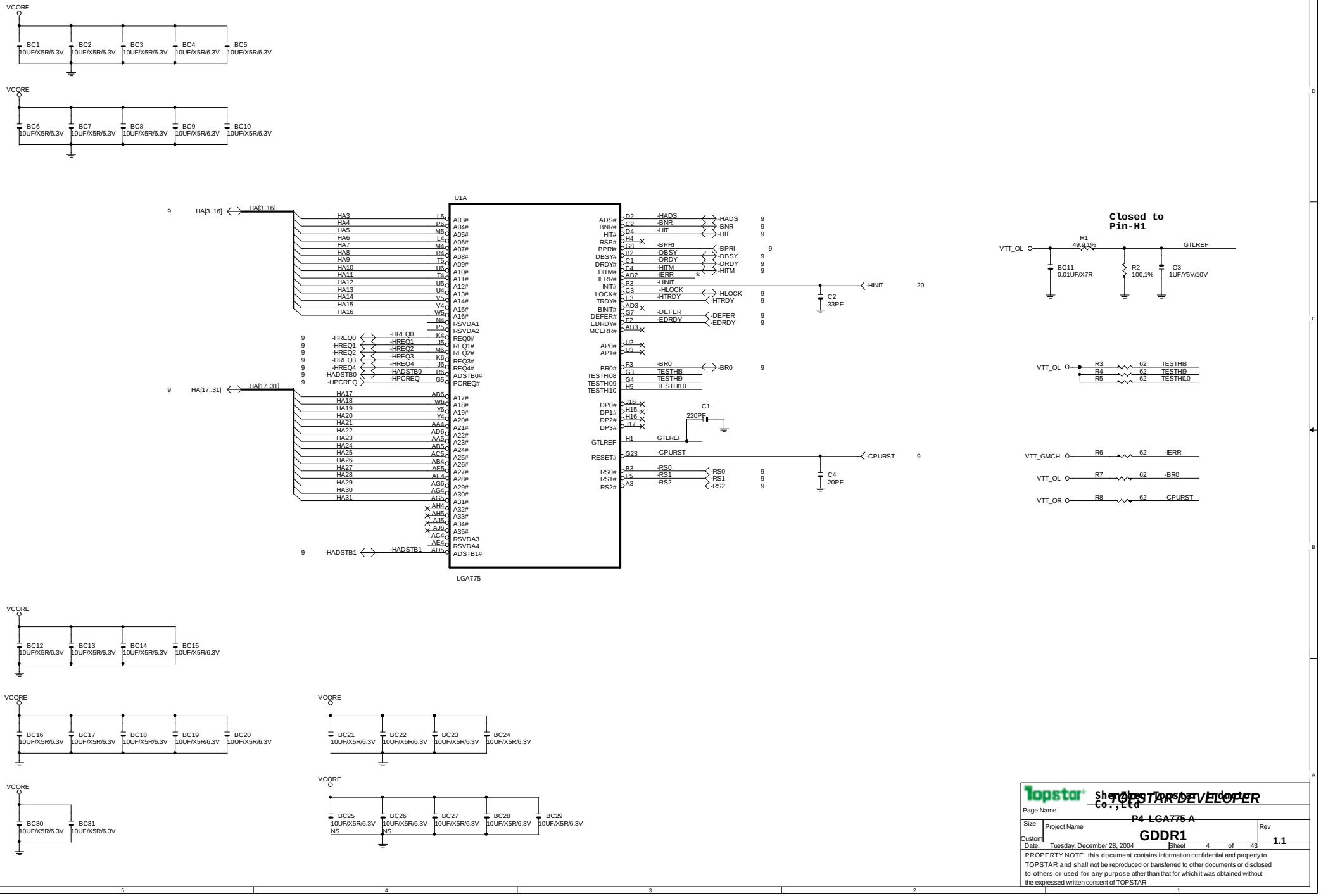

Shenzhen Topstar Industry Co.,Ltd TOPSTAR-DEVELOPER

Page Name	P4_LGA775-A	
Size: Custom	Project Name: GDDR1	Rev: 1.1
Date: Tuesday, December 28, 2004	Sheet 4 of 43	

PROPERTY NOTE: this document contains information confidential and property to TOPSTAR and shall not be reproduced or transferred to other documents or disclosed to others or used for any purpose other than that for which it was obtained without the expressed written consent of TOPSTAR

PDF created with pdfFactory trial version www.pdffactory.com

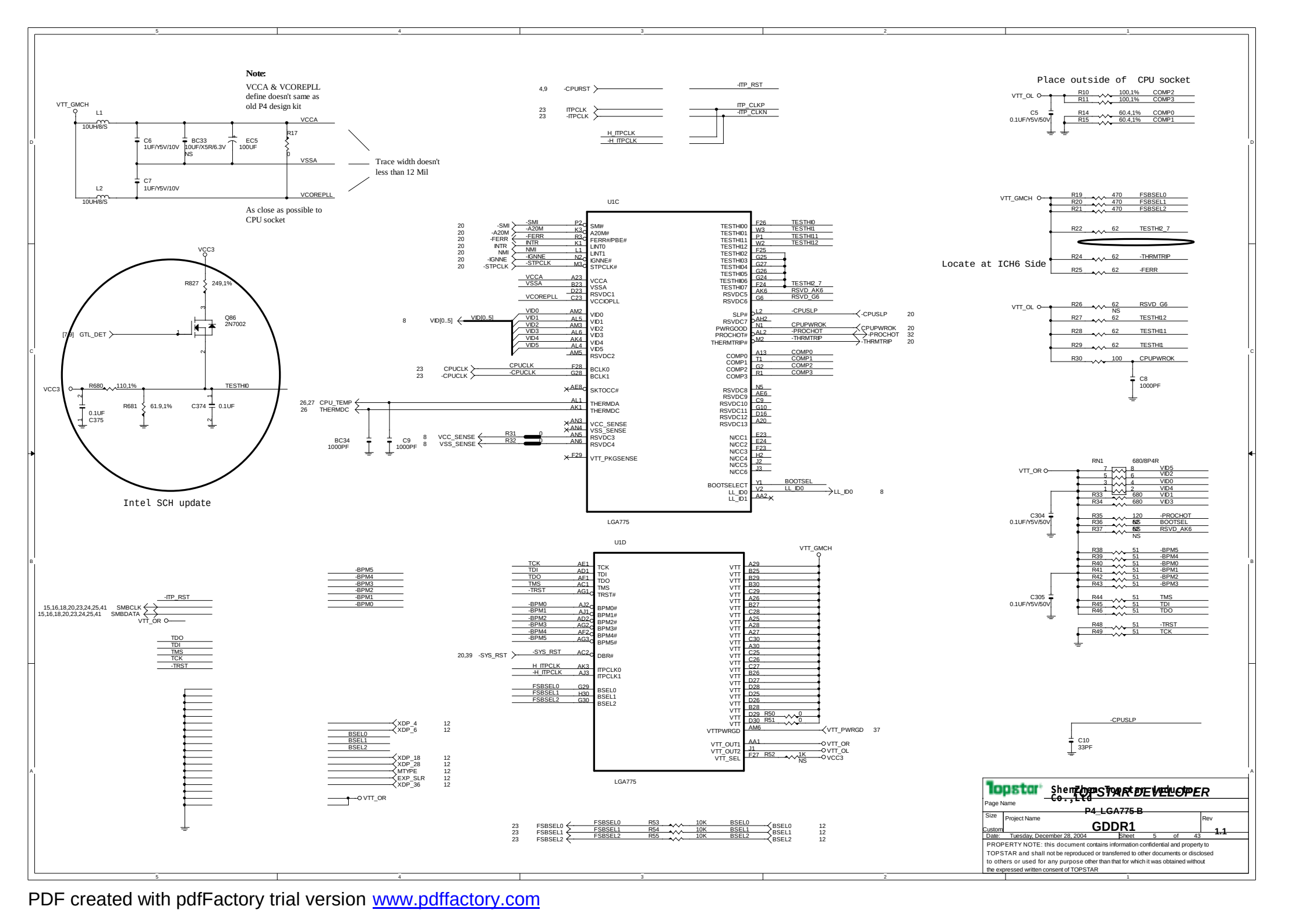

PROPERTY NOTE: this document contains information confidential and property to TOPSTAR and shall not be reproduced or transferred to other documents or disclosed to others or used for any purpose other than that for which it was obtained without the expressed written consent of TOPSTAR

PDF created with pdfFactory trial version www.pdffactory.com

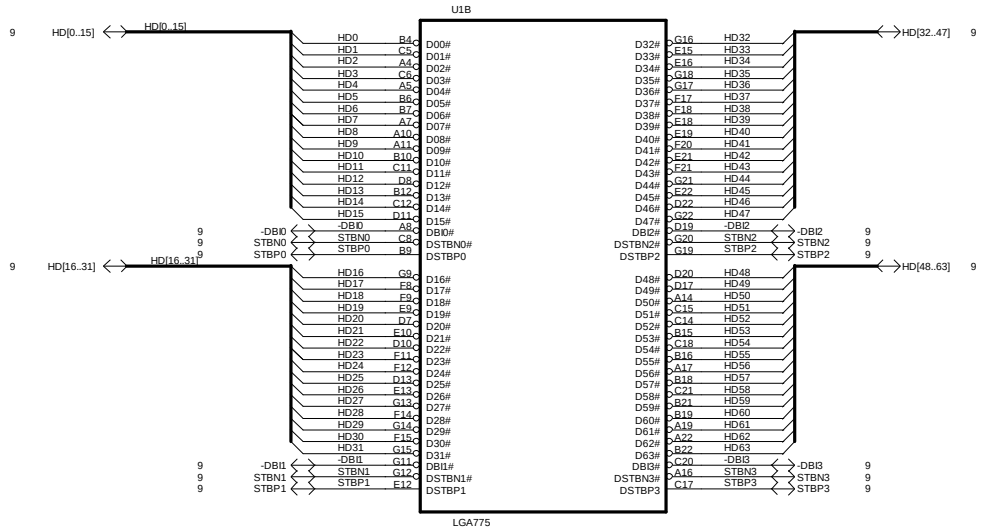

Page Name	P4_LGA775-C		
Size: Custom	Project Name: GDDR1		Rev: 1.1
Date: Tuesday, December 28, 2004	Sheet 6 of 43		

Shenzhen Topstar Industry Co.,Ltd TOPSTAR-DEVELOPER

PROPERTY NOTE: this document contains information confidential and property to TOPSTAR and shall not be reproduced or transferred to other documents or disclosed to others or used for any purpose other than that for which it was obtained without the expressed written consent of TOPSTAR

PDF created with pdfFactory trial version www.pdffactory.com

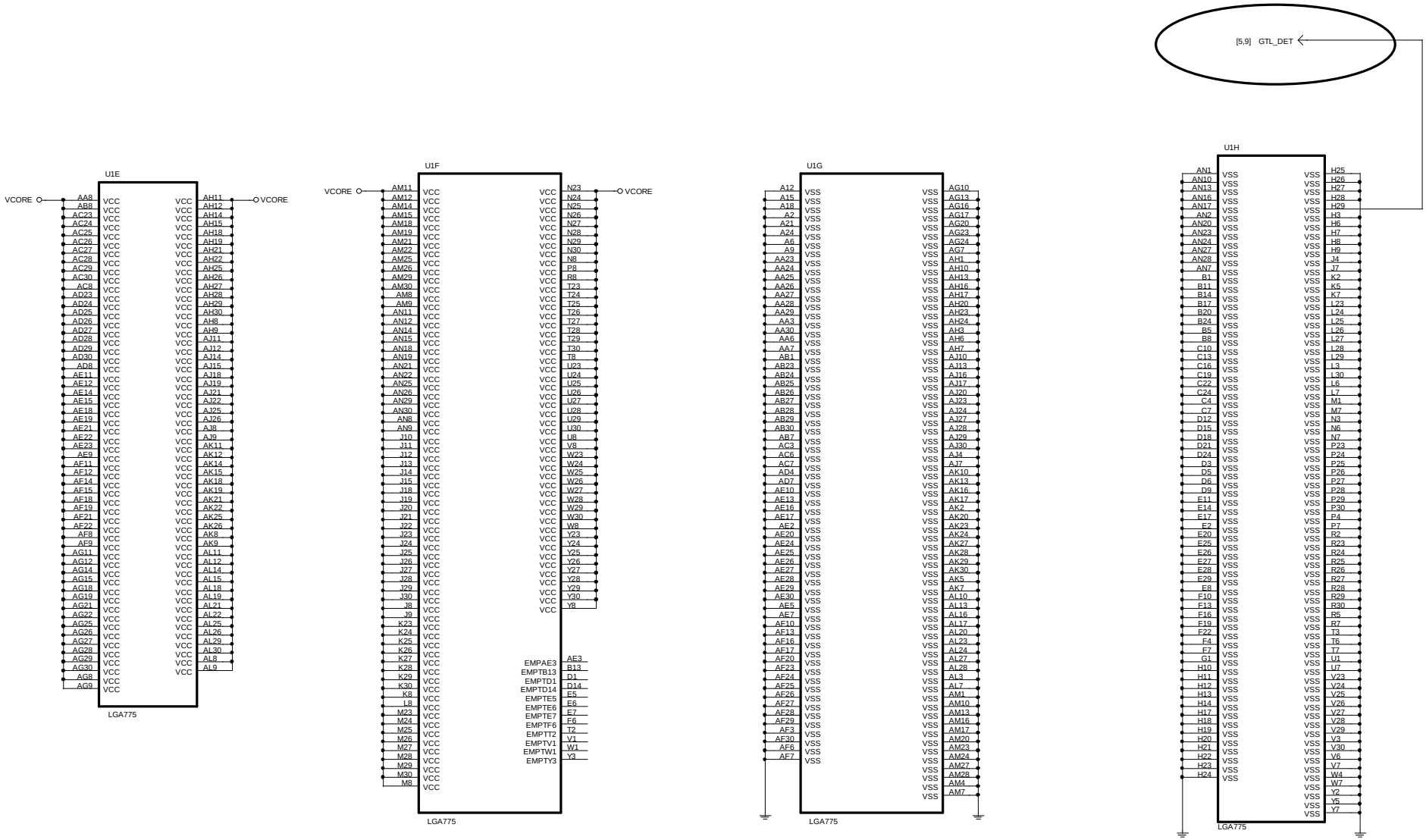

Topstar ShenZhen TOPSTAR DEVELOPER Co.,Ltd

Page Name	P4_LGA775-D	
Size: Custom	Project Name: GDDR1	Rev: 1.1
Date: Tuesday, December 28, 2004	Sheet 7 of 43	

PROPERTY NOTE: this document contains information confidential and property to TOPSTAR and shall not be reproduced or transferred to other documents or disclosed to others or used for any purpose other than that for which it was obtained without the expressed written consent of TOPSTAR

PDF created with pdfFactory trial version www.pdffactory.com

Topstar

Shenzhen Topstar Industrial Co.,Ltd

TOPSTAR DEVELOPER

Page Name

VRD 10.1

Size	Project Name	Rev
C	GDDR1	1.1

Date: Tuesday, December 28, 2004 Sheet 8 of 43

PROPERTY NOTE: this document contains information confidential and property to TOPSTAR and shall not be reproduced or transferred to other documents or disclosed to others or used for any purpose other than that for which it was obtained without the expressed written consent of TOPSTAR

PDF created with pdfFactory trial version www.pdffactory.com

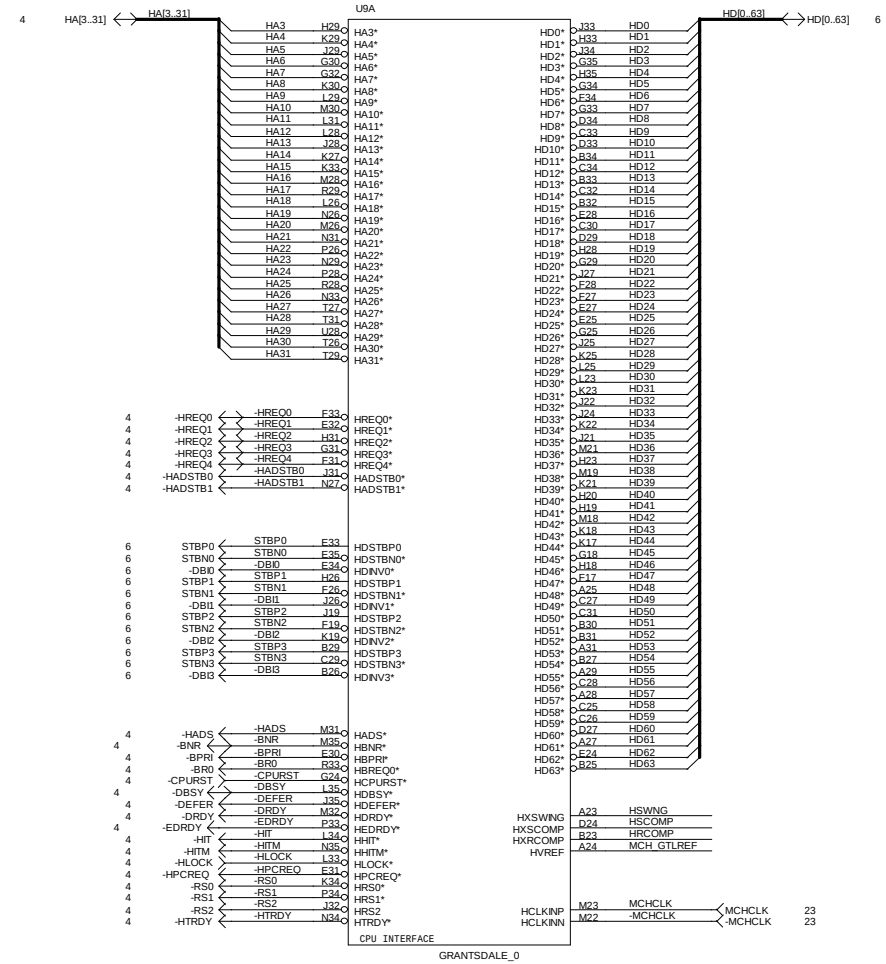

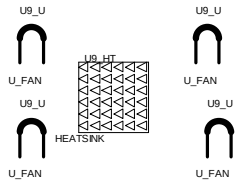

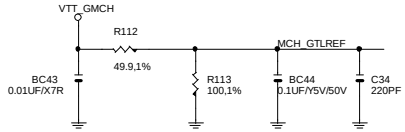

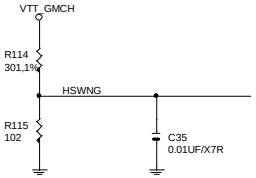

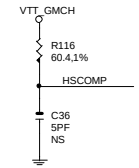

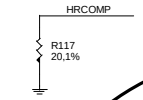

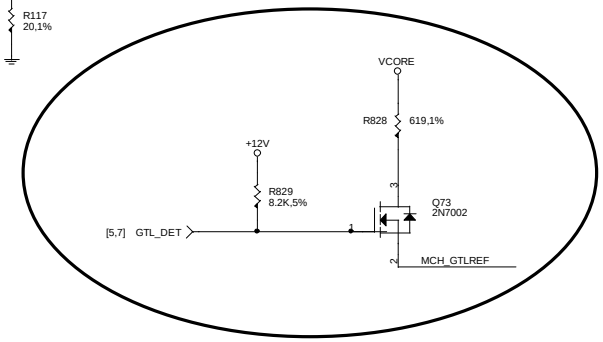

Shenzhen Topstar Industry Co.,Ltd
TOPSTAR DEVELOPER

Page Name	GMCH HOST	
Size: Custom	Project Name: GDDR1	Rev: 1.1
Date: Tuesday, December 28, 2004	Sheet 9 of 43	

PROPERTY NOTE: this document contains information confidential and property to TOPSTAR and shall not be reproduced or transferred to other documents or disclosed to others or used for any purpose other than that for which it was obtained without the expressed written consent of TOPSTAR

PDF created with pdfFactory trial version www.pdffactory.com

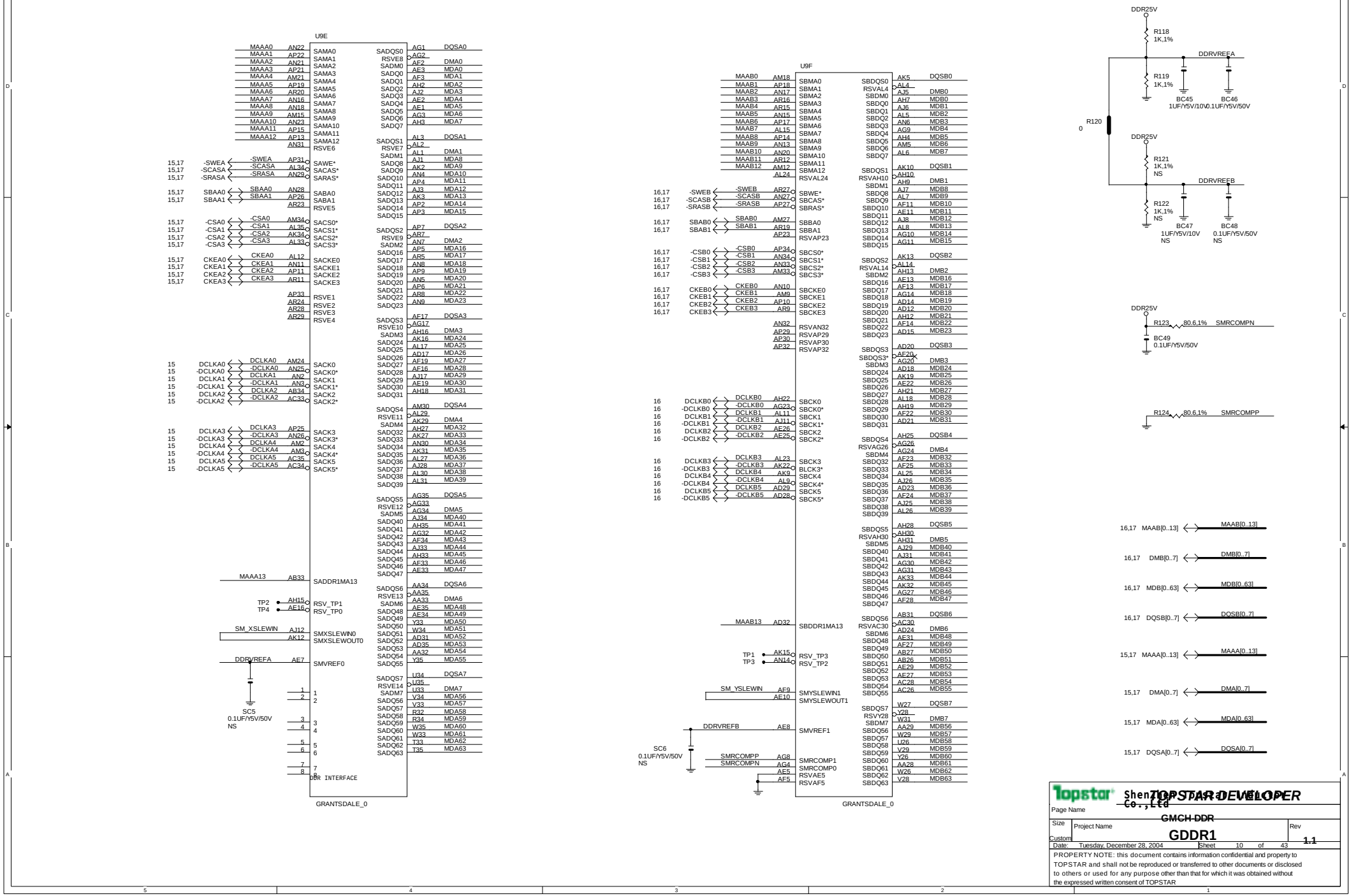

PDF created with pdfFactory trial version www.pdffactory.com

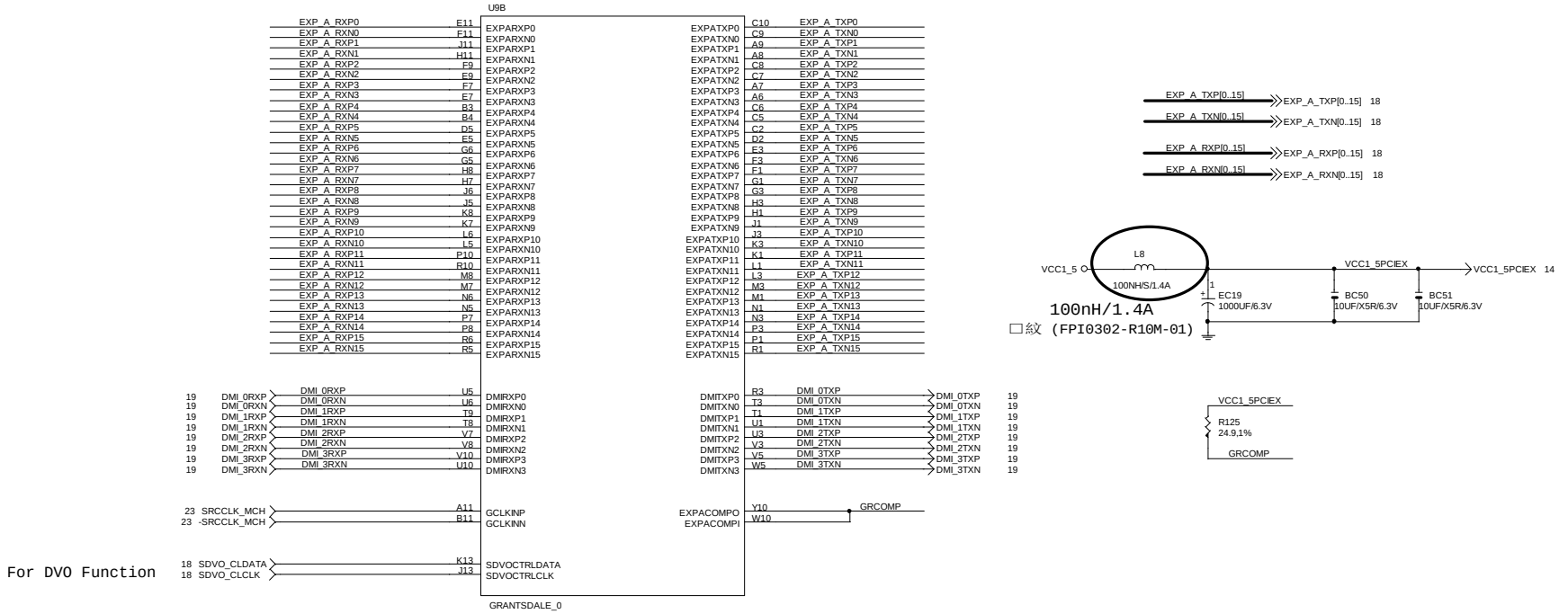

Shenzhen Topstar Industry Co.,Ltd

TOPSTAR-DEVELOPER

Page Name	GMCH-PCI E & DMI	
Size: Custom	Project Name: GDDR1	Rev: 1.1
Date: Tuesday, December 28, 2004	Sheet 11 of 43	

PROPERTY NOTE: this document contains information confidential and property to TOPSTAR and shall not be reproduced or transferred to other documents or disclosed to others or used for any purpose other than that for which it was obtained without the expressed written consent of TOPSTAR

PDF created with pdfFactory trial version www.pdffactory.com

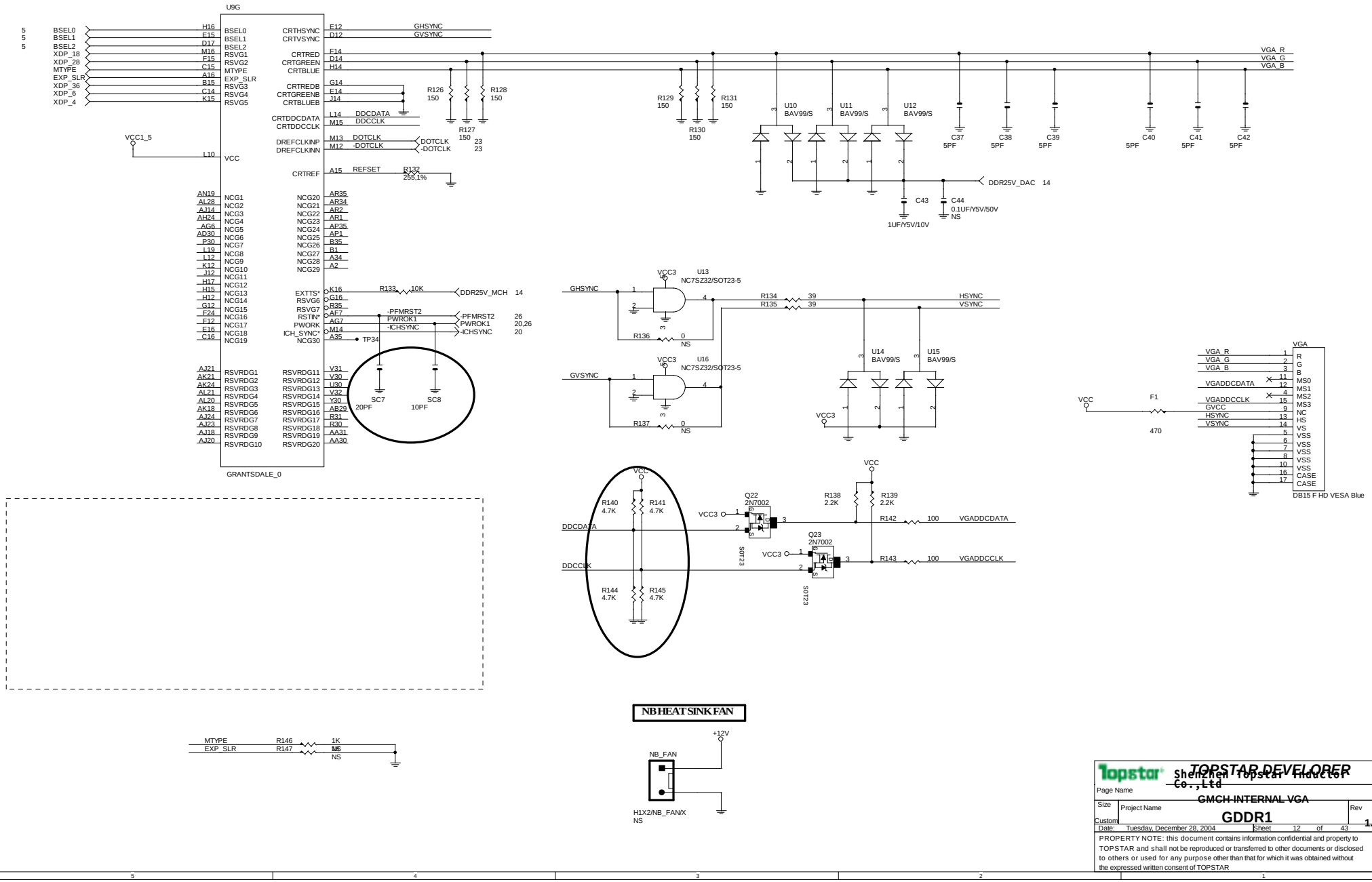

TOPSTAR DEVELOPER
Shenzhen Topstar Inductor Co.,Ltd

Page Name	GMCH INTERNAL VGA	
Size: Custom	Project Name: GDDR1	Rev: 1.1
Date: Tuesday, December 28, 2004	Sheet 12 of 43	

PROPERTY NOTE: this document contains information confidential and property to TOPSTAR and shall not be reproduced or transferred to other documents or disclosed to others or used for any purpose other than that for which it was obtained without the expressed written consent of TOPSTAR

PDF created with pdfFactory trial version www.pdffactory.com

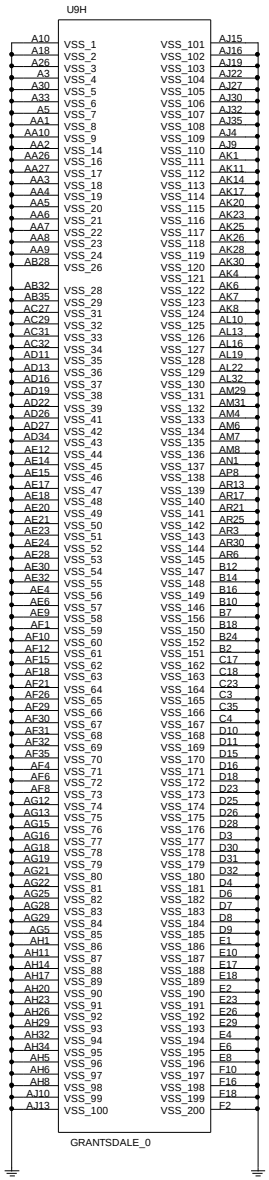

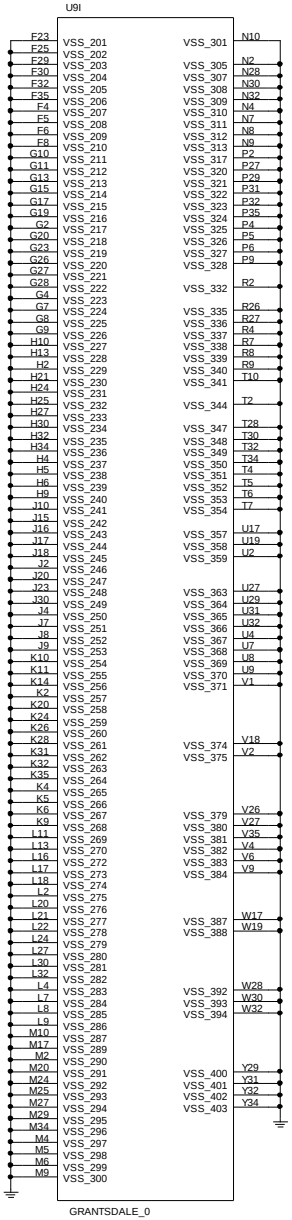

Shenzhen Topstar Industry Co.,Ltd TOPSTAR-DEVELOPER

Page Name GMCH GND

Size: Custom | Project Name: GDDR1 | Rev: 1.1

Date: Tuesday, December 28, 2004 | Sheet 13 of 43

PROPERTY NOTE: this document contains information confidential and property to TOPSTAR and shall not be reproduced or transferred to other documents or disclosed to others or used for any purpose other than that for which it was obtained without the expressed written consent of TOPSTAR

PDF created with pdfFactory trial version www.pdffactory.com

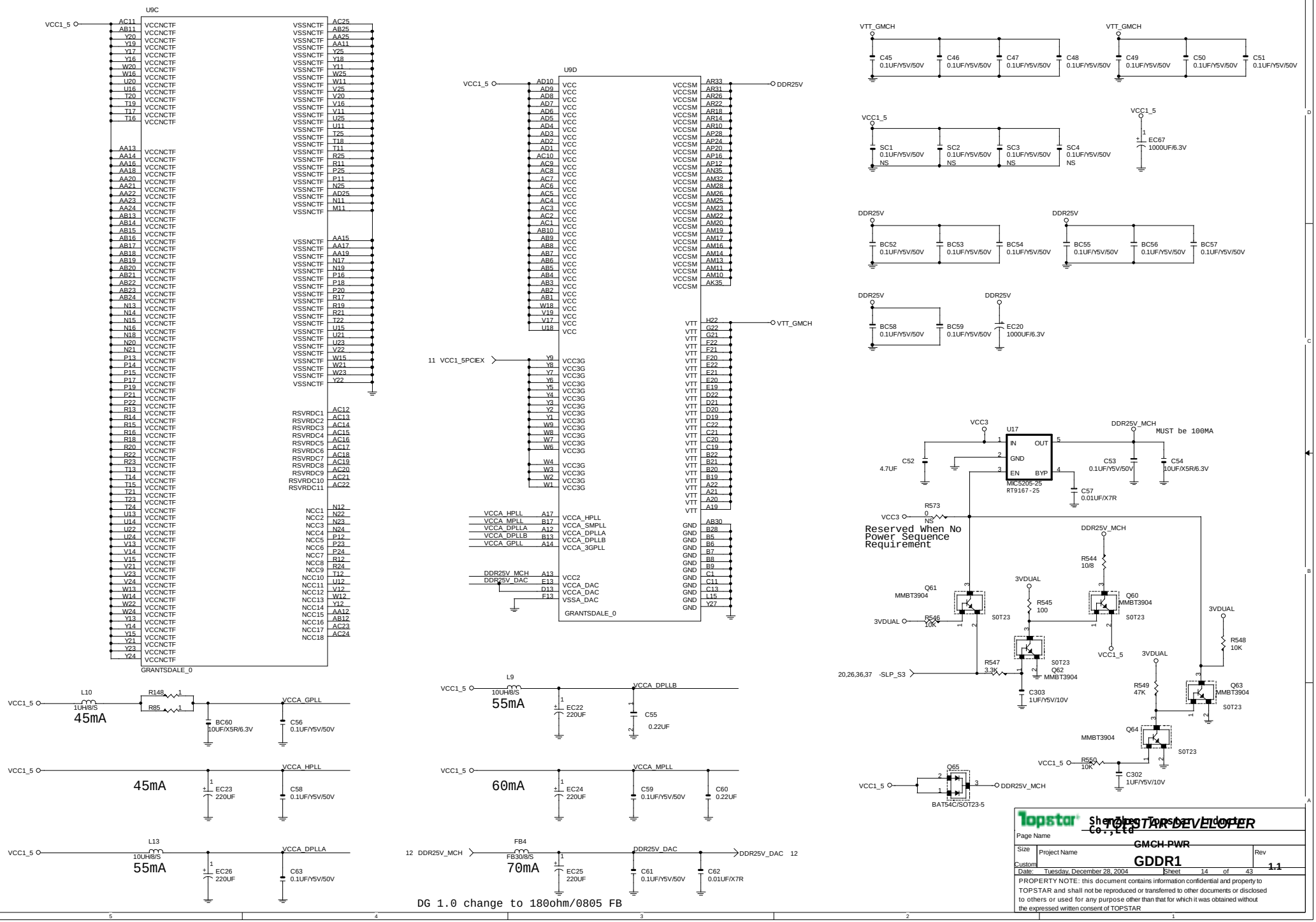

PDF created with pdfFactory trial version www.pdffactory.com

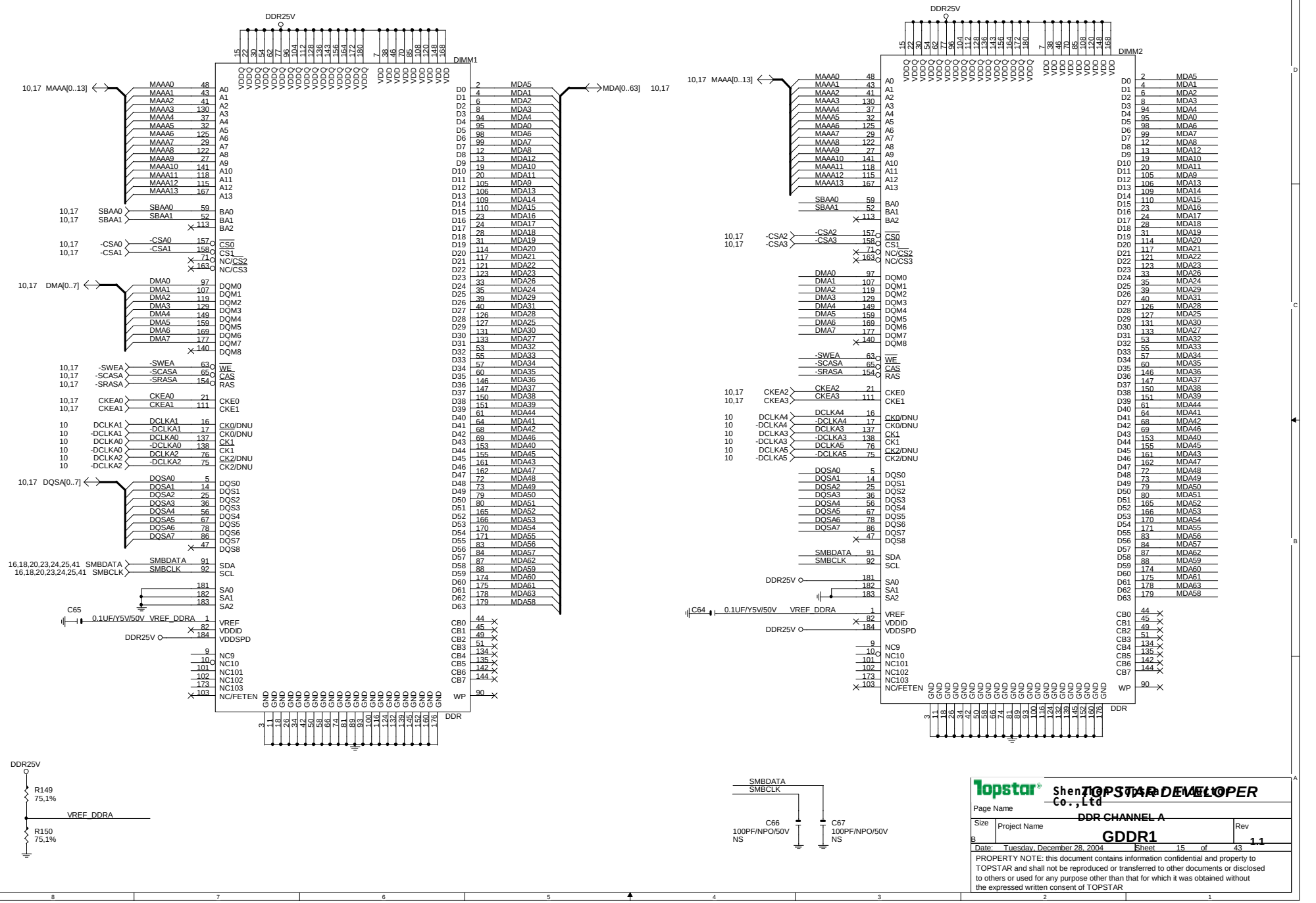

Topstar Shenzhen TOPSTAR DEVELOPER Co.,Ltd

Page Name: DDR CHANNEL A

Size: B | Project Name: GDDR1 | Rev: 1.1

Date: Tuesday, December 28, 2004 Sheet 15 of 43

PROPERTY NOTE: this document contains information confidential and property to TOPSTAR and shall not be reproduced or transferred to other documents or disclosed to others or used for any purpose other than that for which it was obtained without the expressed written consent of TOPSTAR

PDF created with pdfFactory trial version www.pdffactory.com

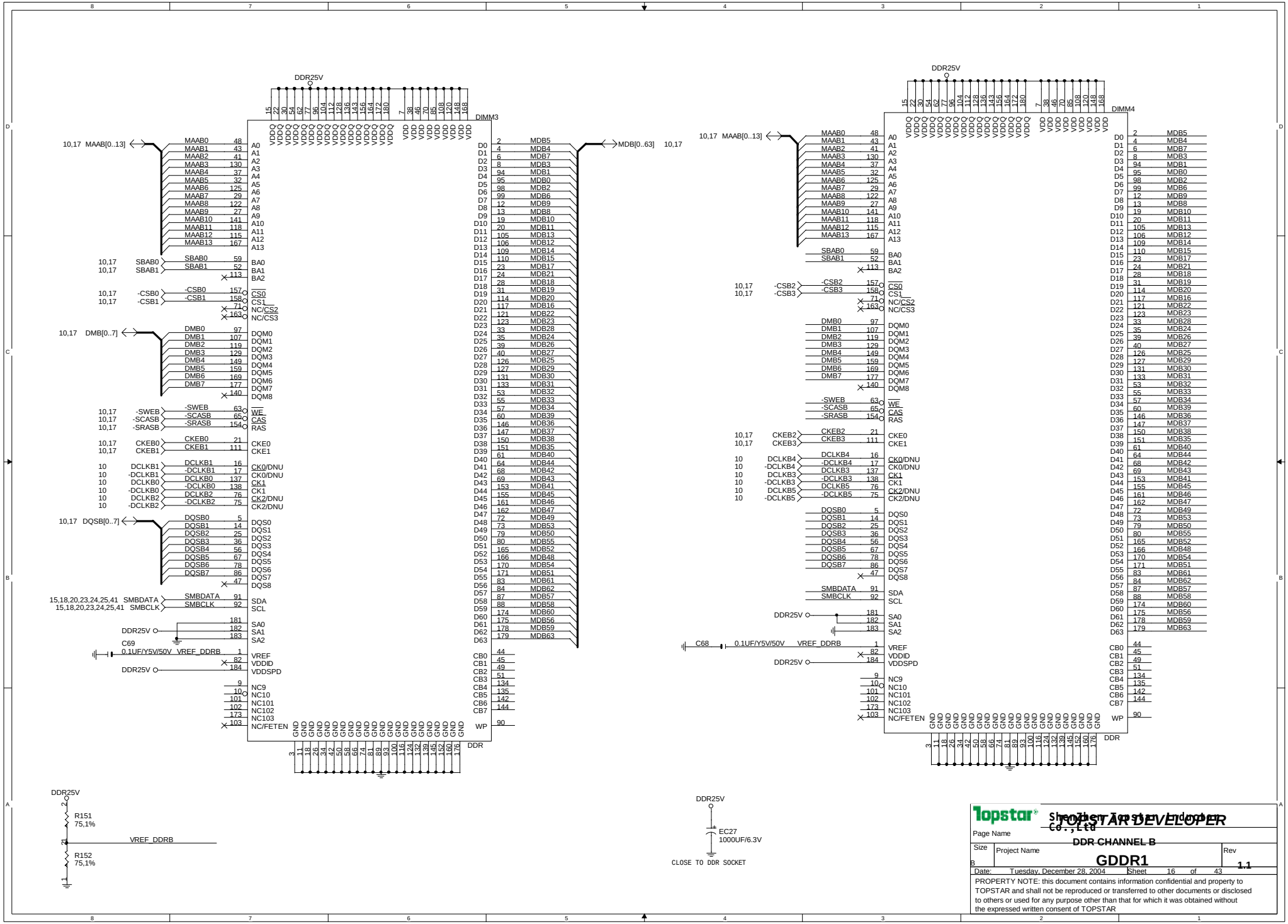

PDF created with pdfFactory trial version www.pdffactory.com

DDRVTT Decouple

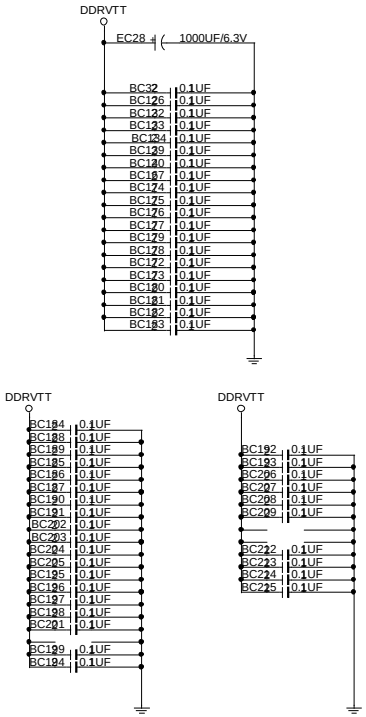

DDR25V Decouple

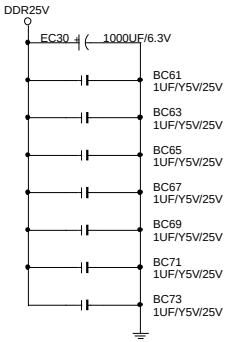

DDR TERMINATION CHANNEL A

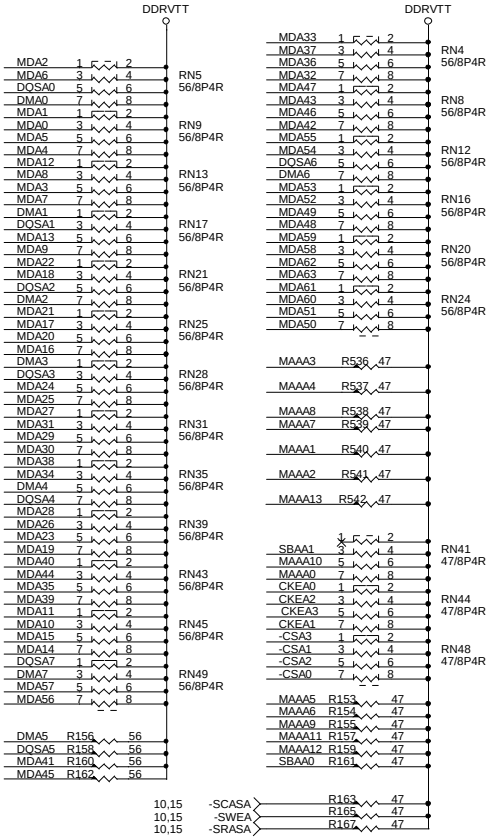

47 Ohms

SBAA[0:1]	SBAA[0:1]	10,15
-CSA[0:3]	-CSA[0:3]	10,15
CKEA[0:3]	CKEA[0:3]	10,15
MAAA[0..13]	MAAA[0..13]	10,15

56 Ohms

DQSA[0..7]	DQSA[0..7]	10,15
DMA[0..7]	DMA[0..7]	10,15
MDA[0..63]	MDA[0..63]	10,15

DDRVTT Decouple

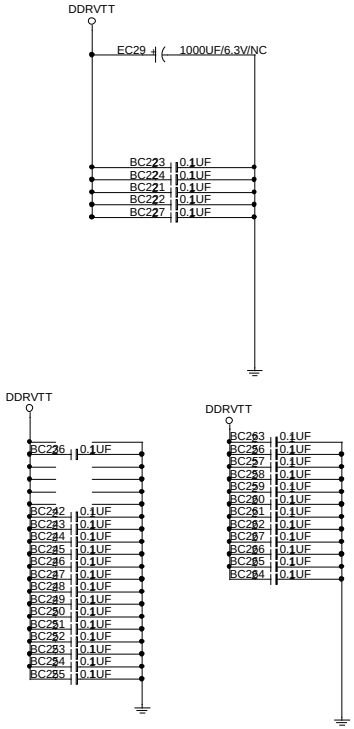

DDR25V Decouple

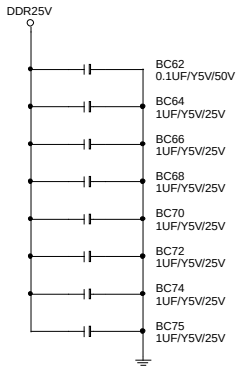

CHANNEL B

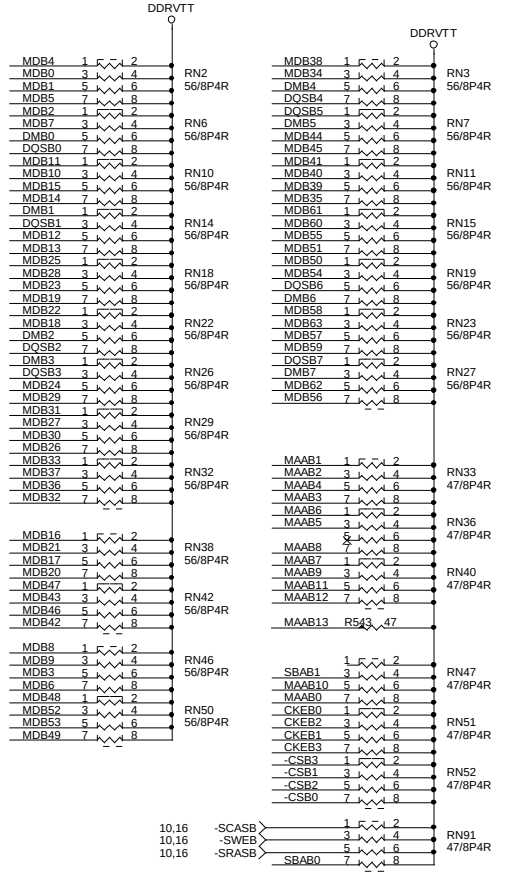

47 Ohms

SBAB[0:1]	SBAB[0:1]	10,16
-CSB[0:3]	-CSB[0:3]	10,16
CKEB[0:3]	CKEB[0:3]	10,16
MAAB[0..13]	MAAB[0..13]	10,16

56 Ohms

DQSB[0..7]	DQSB[0..7]	10,16
DMB[0..7]	DMB[0..7]	10,16
MDB[0..63]	MDB[0..63]	10,16

Topstar Shenzhen Topstar Industrial Co.,Ltd

TOPSTAR DEVELOPER

Page Name: DDR TERMINATOR

Size: B | Project Name: GDDR1 | Rev: 1.1

Date: Tuesday, December 28, 2004 Sheet 17 of 43

PROPERTY NOTE: this document contains information confidential and property to TOPSTAR and shall not be reproduced or transferred to other documents or disclosed to others or used for any purpose other than that for which it was obtained without the expressed written consent of TOPSTAR

PDF created with pdfFactory trial version www.pdffactory.com

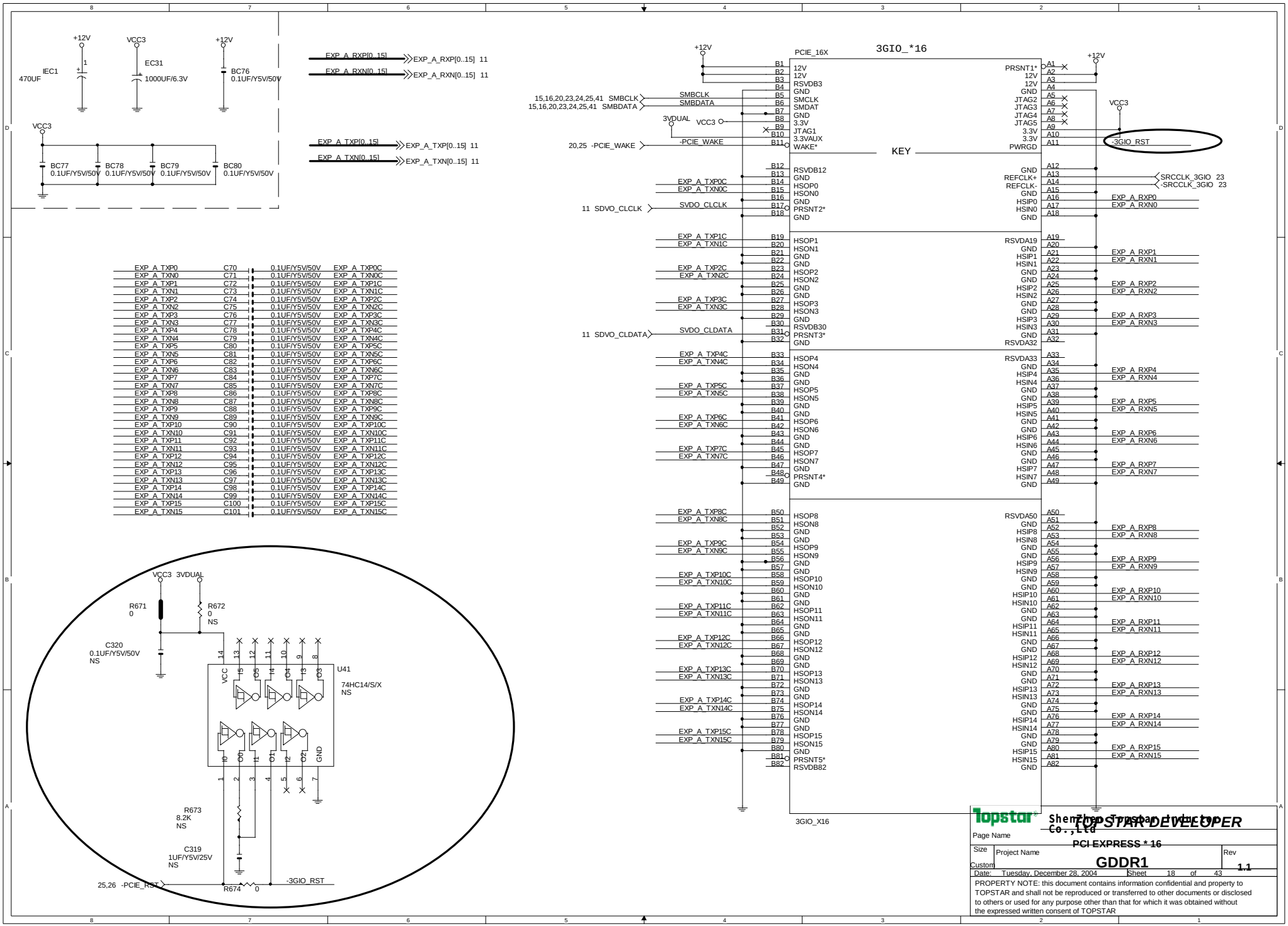

PDF created with pdfFactory trial version www.pdffactory.com

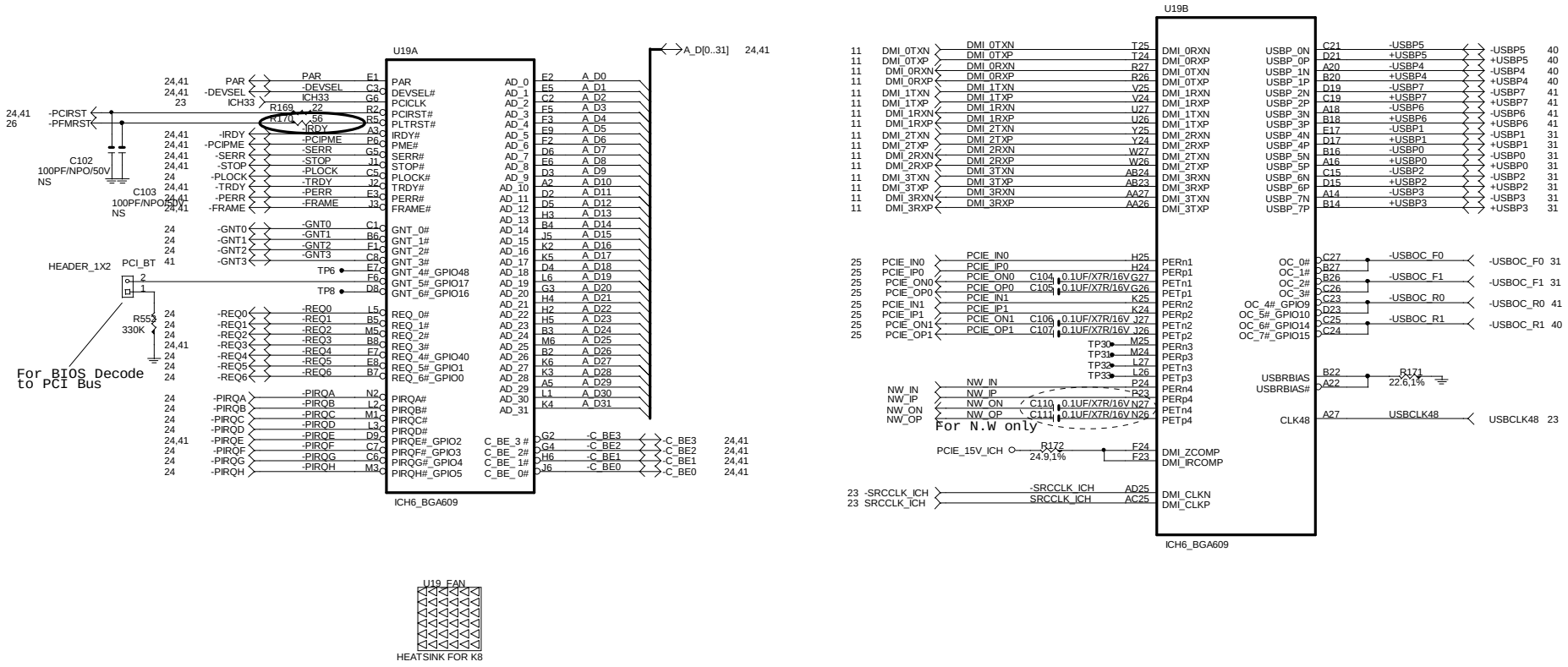

TOPSTAR DEVELOPER

Shenzhen Topstar Industrial Co.,Ltd

Page Name	ICH6-PCI, DMI, LAN, USB	
Size: B	Project Name: GDDR1	Rev: 1.1
Date: Tuesday, December 28, 2004	Sheet 19 of 43	

PROPERTY NOTE: this document contains information confidential and property to TOPSTAR and shall not be reproduced or transferred to other documents or disclosed to others or used for any purpose other than that for which it was obtained without the expressed written consent of TOPSTAR

PDF created with pdfFactory trial version www.pdffactory.com

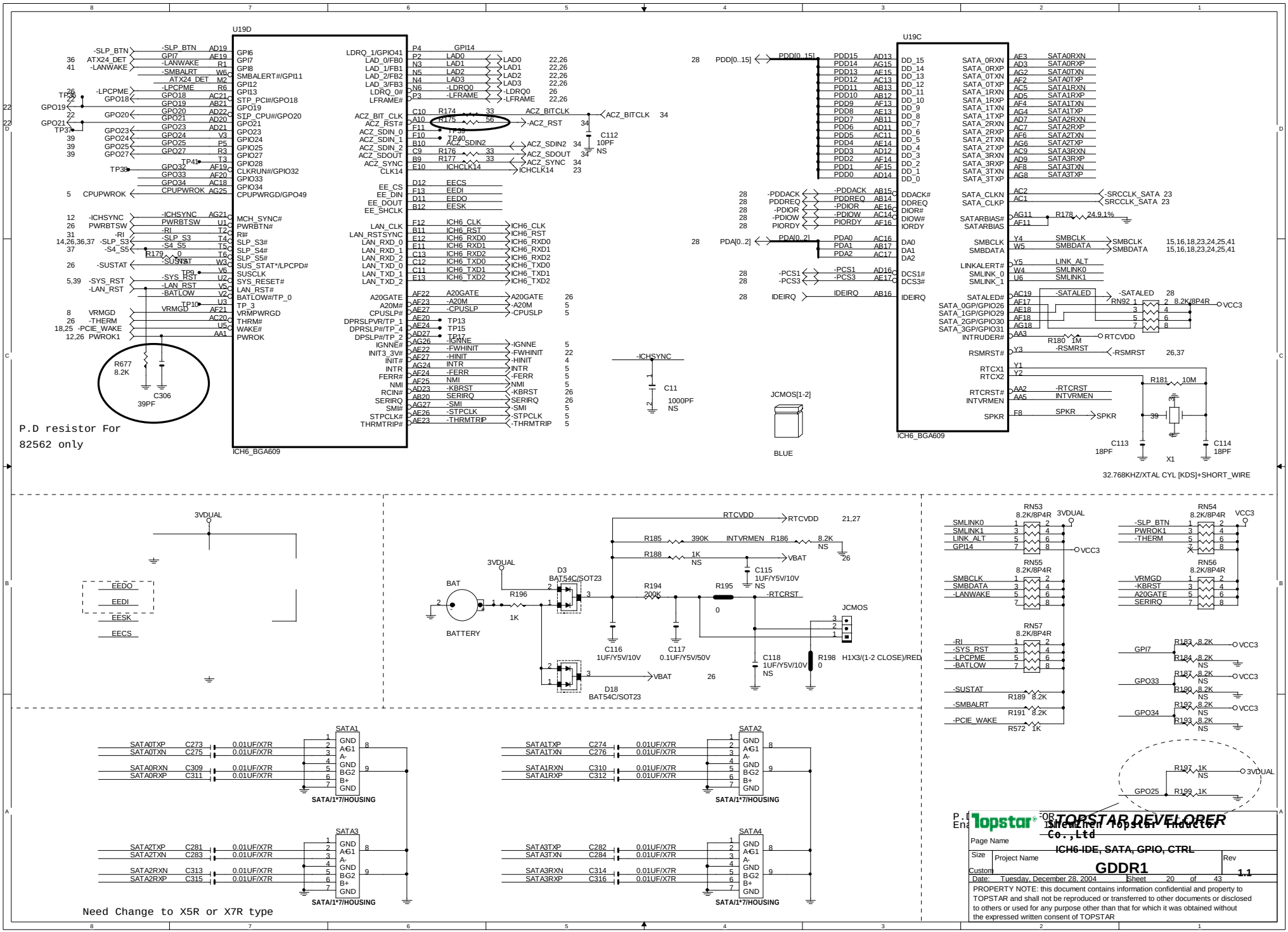

PDF created with pdfFactory trial version www.pdffactory.com

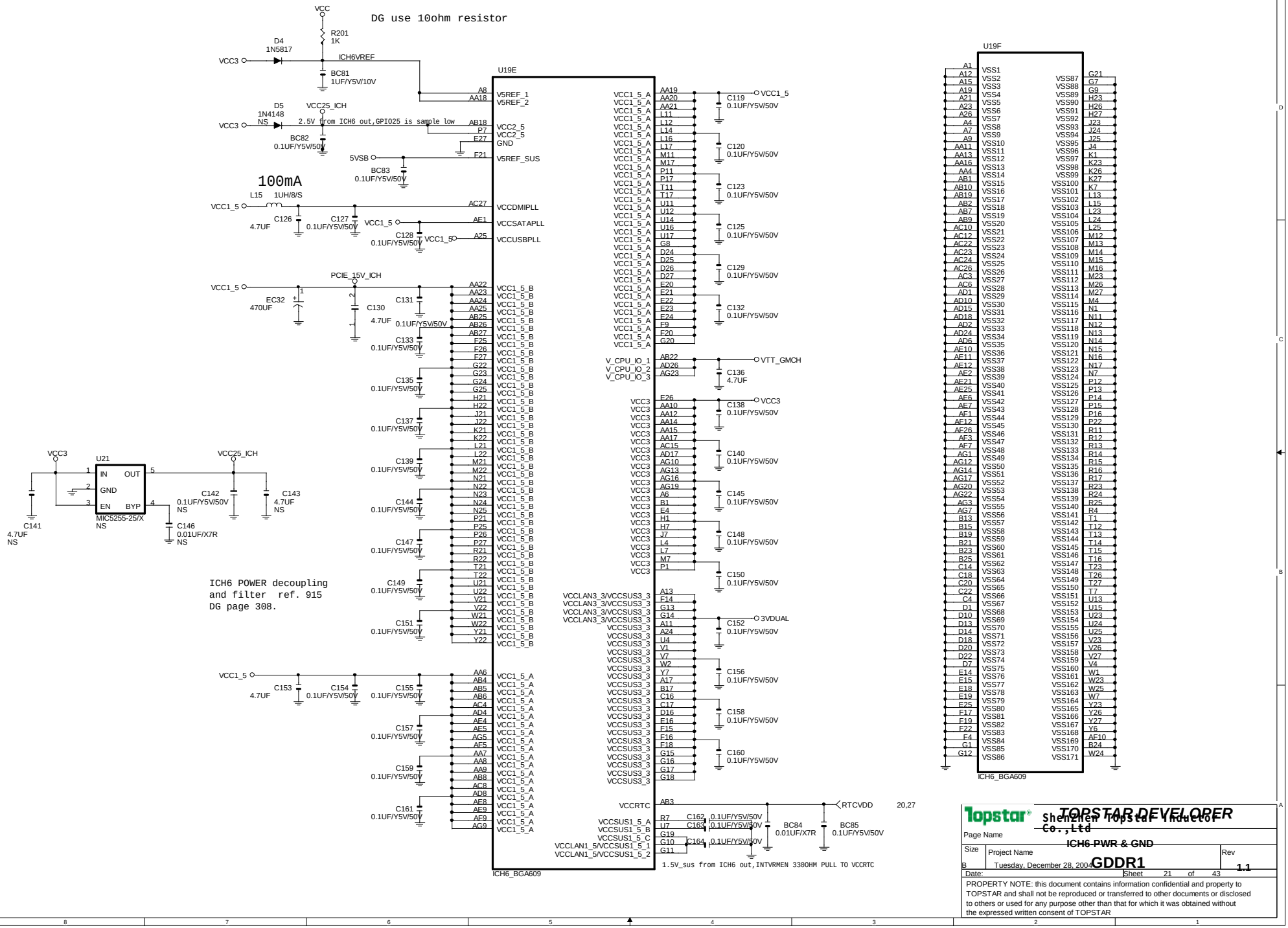

PDF created with pdfFactory trial version www.pdffactory.com

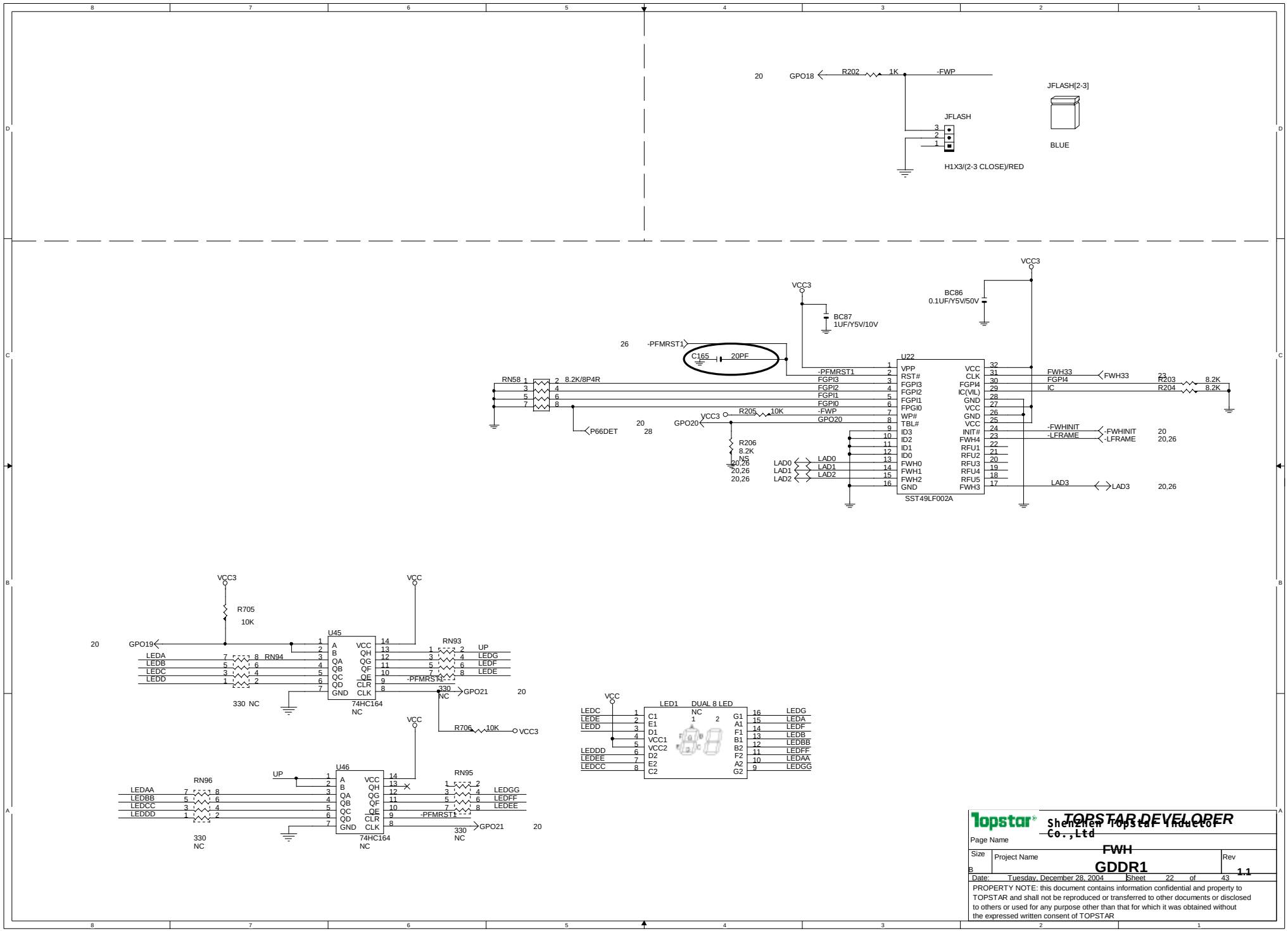

TOPSTAR DEVELOPER

Shenzhen Topstar Industrial Co.,Ltd

Page Name

Size	Project Name	Rev
B	FWH GDDR1	1.1

Date: Tuesday, December 28, 2004 Sheet 22 of 43

PROPERTY NOTE: this document contains information confidential and property to TOPSTAR and shall not be reproduced or transferred to other documents or disclosed to others or used for any purpose other than that for which it was obtained without the expressed written consent of TOPSTAR

PDF created with pdfFactory trial version www.pdffactory.com

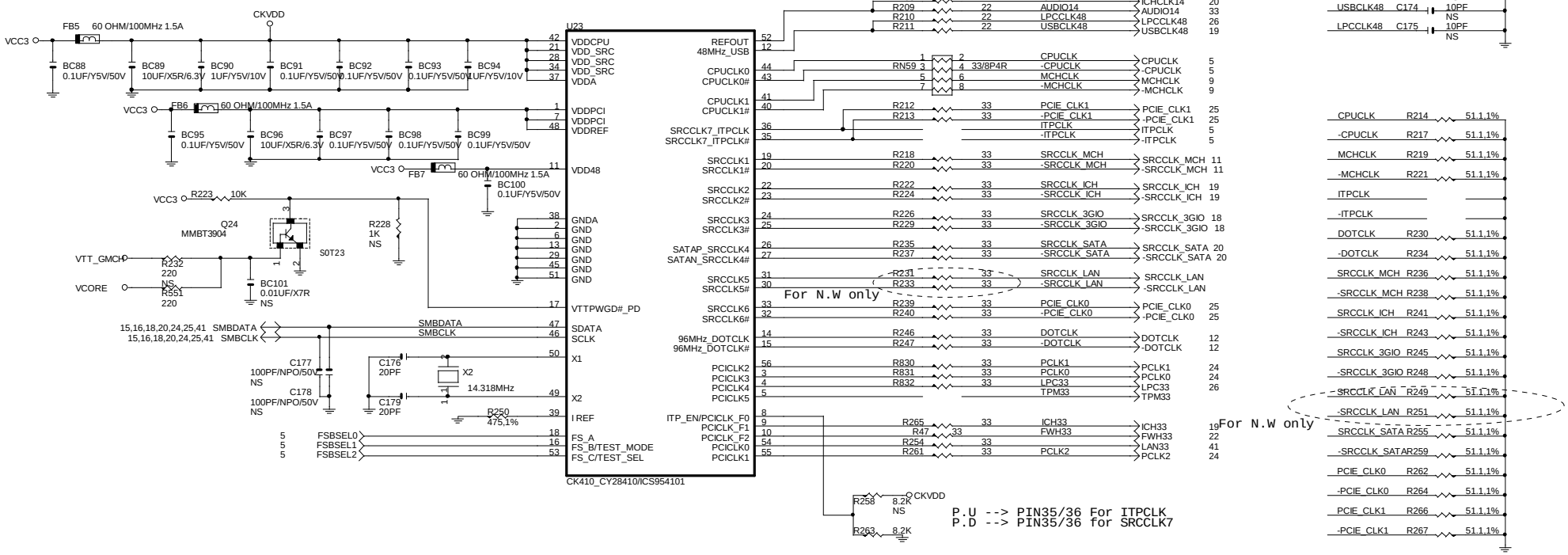

topstar

TOPSTAR DEVELOPER

ShenZhen Topstar Industrial Co.,Ltd

Page Name

Size: Custom | Project Name: CK410 GDDR1 | Rev: 1.1

Date: Tuesday, December 28, 2004 Sheet 23 of 43

PROPERTY NOTE: this document contains information confidential and property to TOPSTAR and shall not be reproduced or transferred to other documents or disclosed to others or used for any purpose other than that for which it was obtained without the expressed written consent of TOPSTAR

PDF created with pdfFactory trial version www.pdffactory.com

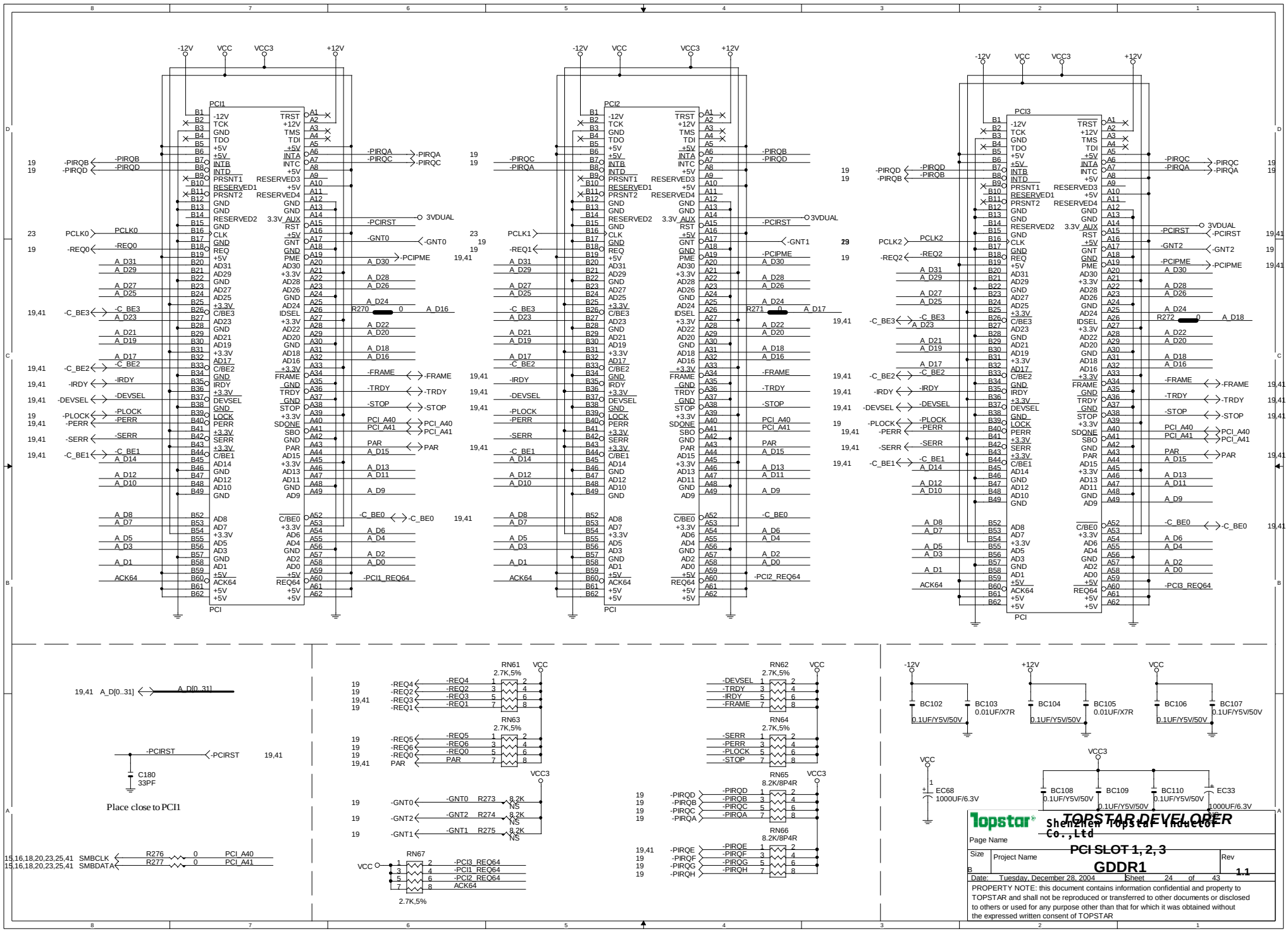

PDF created with pdfFactory trial version www.pdffactory.com

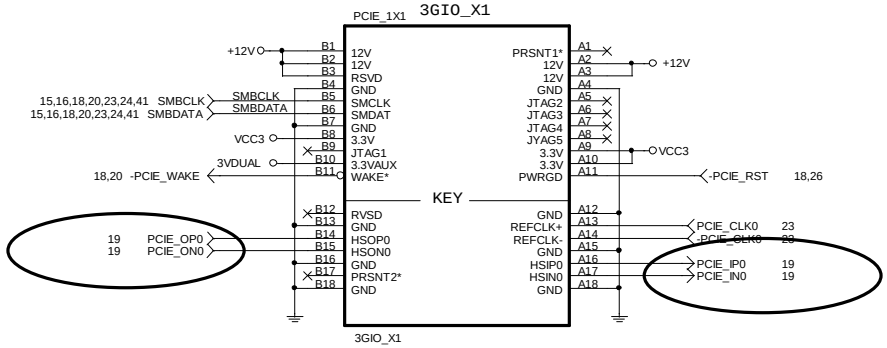

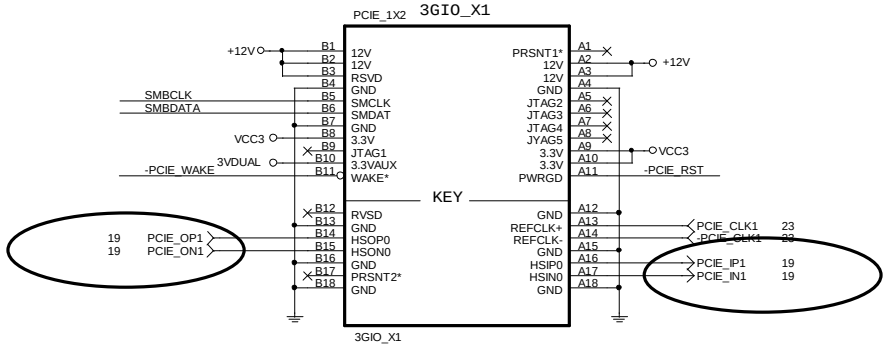

topstar	Shenzhen Topstar Industrial Co.,Ltd	TOPSTAR DEVELOPER
Page Name		
Size: B	Project Name: PCI E SLOT 1, 2, 3 GDDR1	Rev: 1.1
Date: Tuesday, December 28, 2004	Sheet 25 of 43	

PROPERTY NOTE: this document contains information confidential and property to TOPSTAR and shall not be reproduced or transferred to other documents or disclosed to others or used for any purpose other than that for which it was obtained without the expressed written consent of TOPSTAR

PDF created with pdfFactory trial version www.pdffactory.com

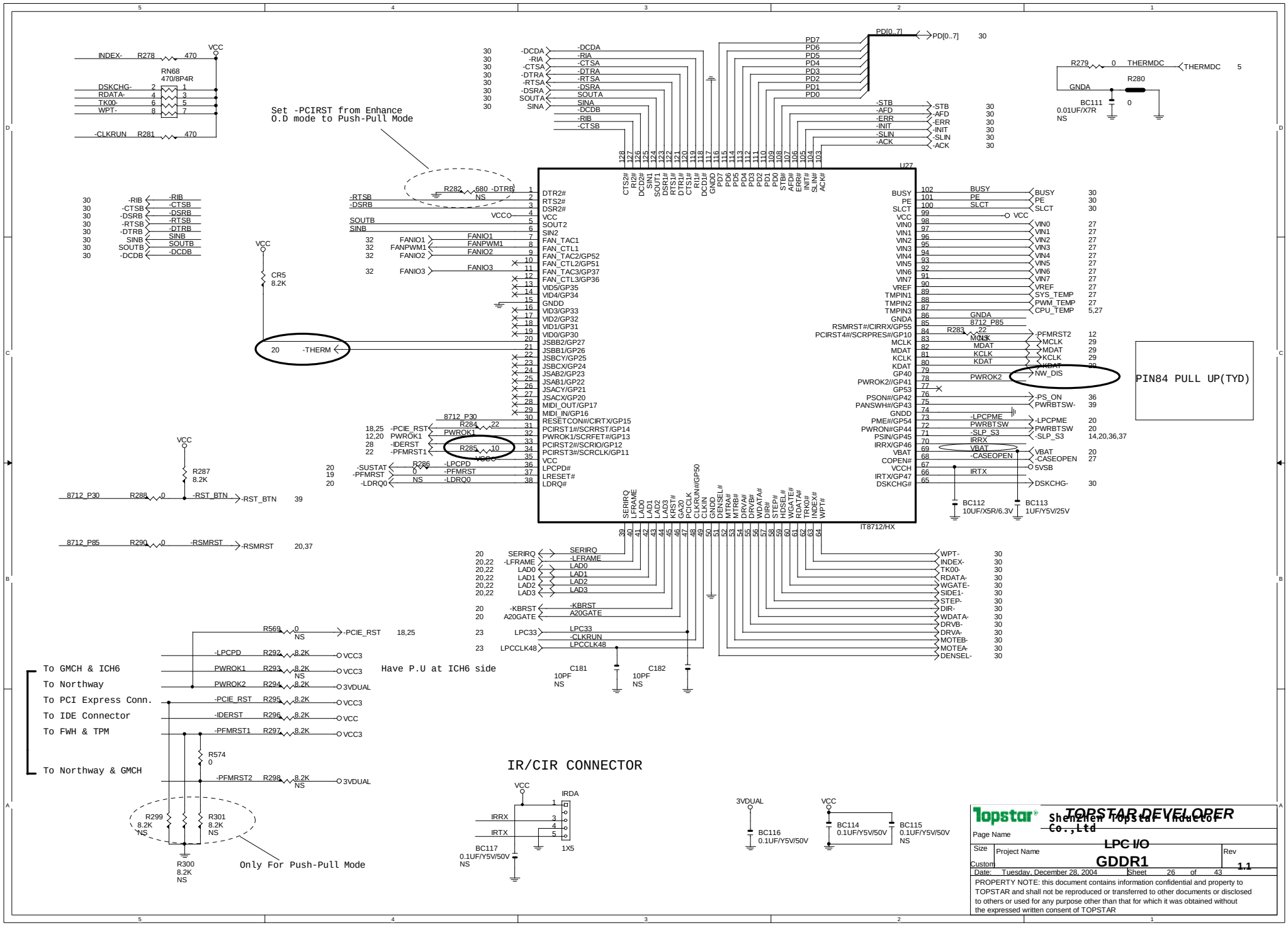

Topstar Shenzhen Topstar Industrial Co.,Ltd

TOPSTAR DEVELOPER

Page Name: LPC I/O

Size: Custom | Project Name: GDDR1 | Rev: 1.1

Date: Tuesday, December 28, 2004 Sheet 26 of 43

PROPERTY NOTE: this document contains information confidential and property to TOPSTAR and shall not be reproduced or transferred to other documents or disclosed to others or used for any purpose other than that for which it was obtained without the expressed written consent of TOPSTAR

PDF created with pdfFactory trial version www.pdffactory.com

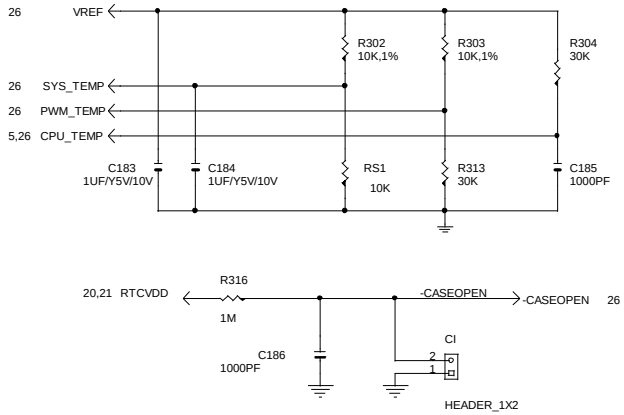

Case Open Circuits

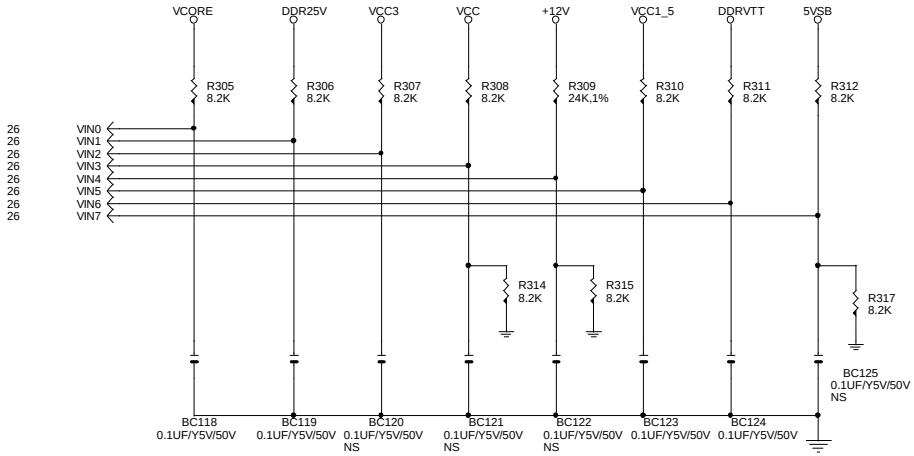

Shenzhen Topstar Inductor Co.,Ltd

TOPSTAR DEVELOPER

Page Name: HARDWARE MONITOR

Size: B | Project Name: GDDR1 | Rev: 1.1

Date: Tuesday, December 28, 2004 Sheet 27 of 43

PROPERTY NOTE: this document contains information confidential and property to TOPSTAR and shall not be reproduced or transferred to other documents or disclosed to others or used for any purpose other than that for which it was obtained without the expressed written consent of TOPSTAR

PDF created with pdfFactory trial version www.pdffactory.com

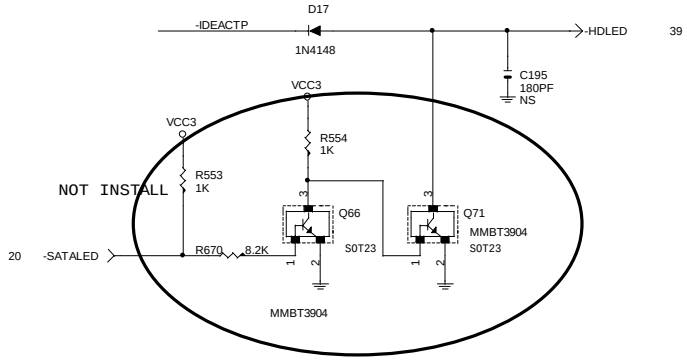

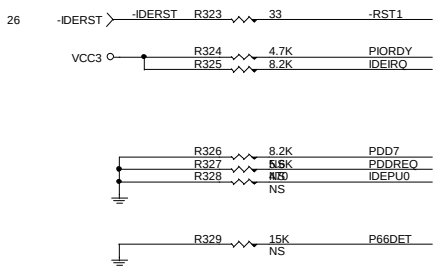

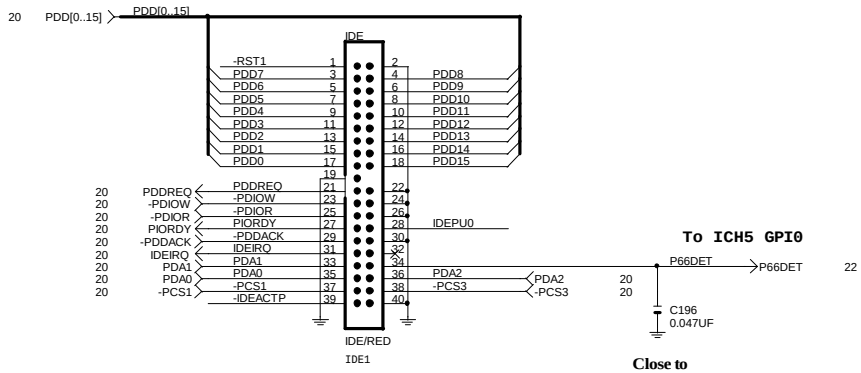

PRIMARY IDE CONNECTOR

Topstar	TOPSTAR DEVELOPER ShenZhen Topstar Inductor Co.,Ltd		
Page Name	IDE		
Size: B	Project Name: GDDR1	Rev: 1.1	
Date: Tuesday, December 28, 2004	Sheet 28 of 43		

PROPERTY NOTE: this document contains information confidential and property to TOPSTAR and shall not be reproduced or transferred to other documents or disclosed to others or used for any purpose other than that for which it was obtained without the expressed written consent of TOPSTAR

PDF created with pdfFactory trial version www.pdffactory.com

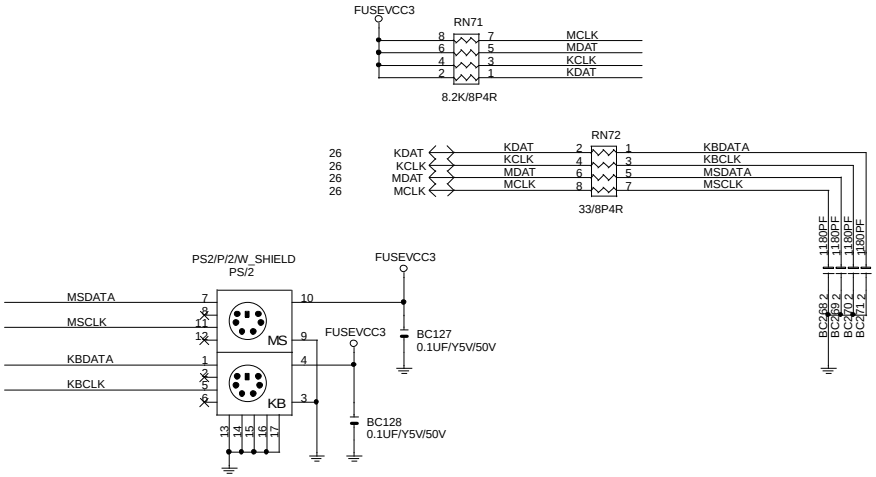

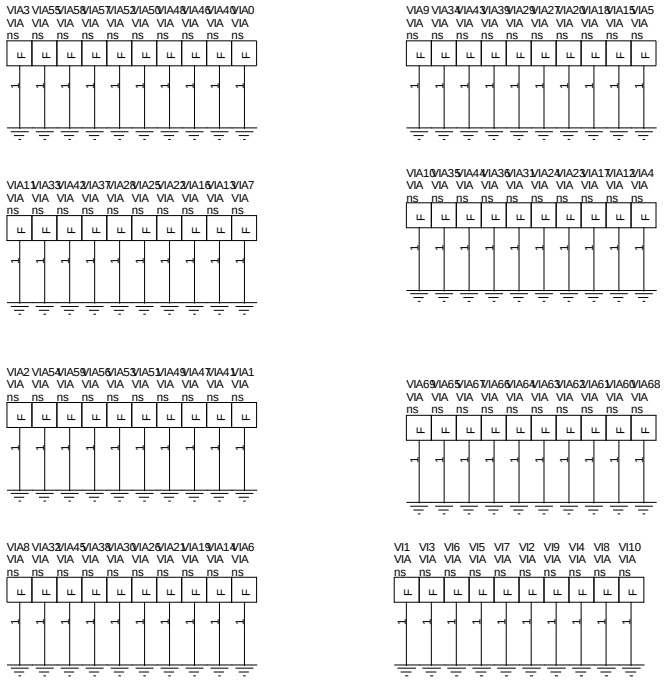

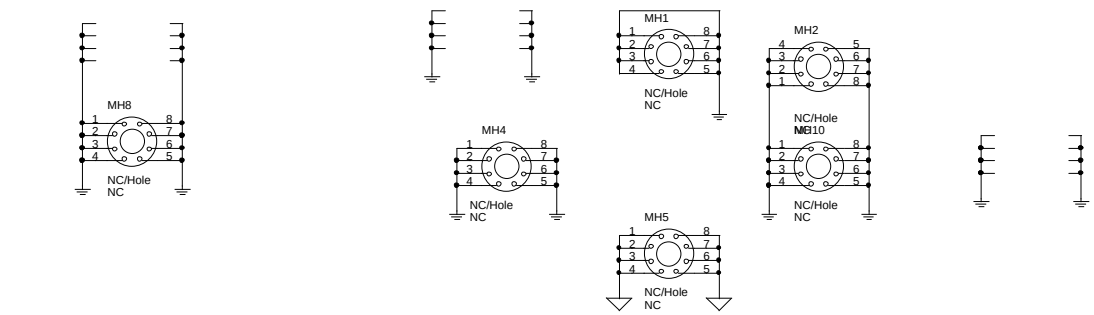

Topstar	Shenzhen Topstar Industrial Co.,Ltd	
Page Name	PS/2 KB & MS	
Size: B	Project Name: GDDR1	Rev: 1.1
Date: Tuesday, December 28, 2004	Sheet 29 of 43	

PROPERTY NOTE: this document contains information confidential and property to TOPSTAR and shall not be reproduced or transferred to other documents or disclosed to others or used for any purpose other than that for which it was obtained without the expressed written consent of TOPSTAR

PDF created with pdfFactory trial version www.pdffactory.com

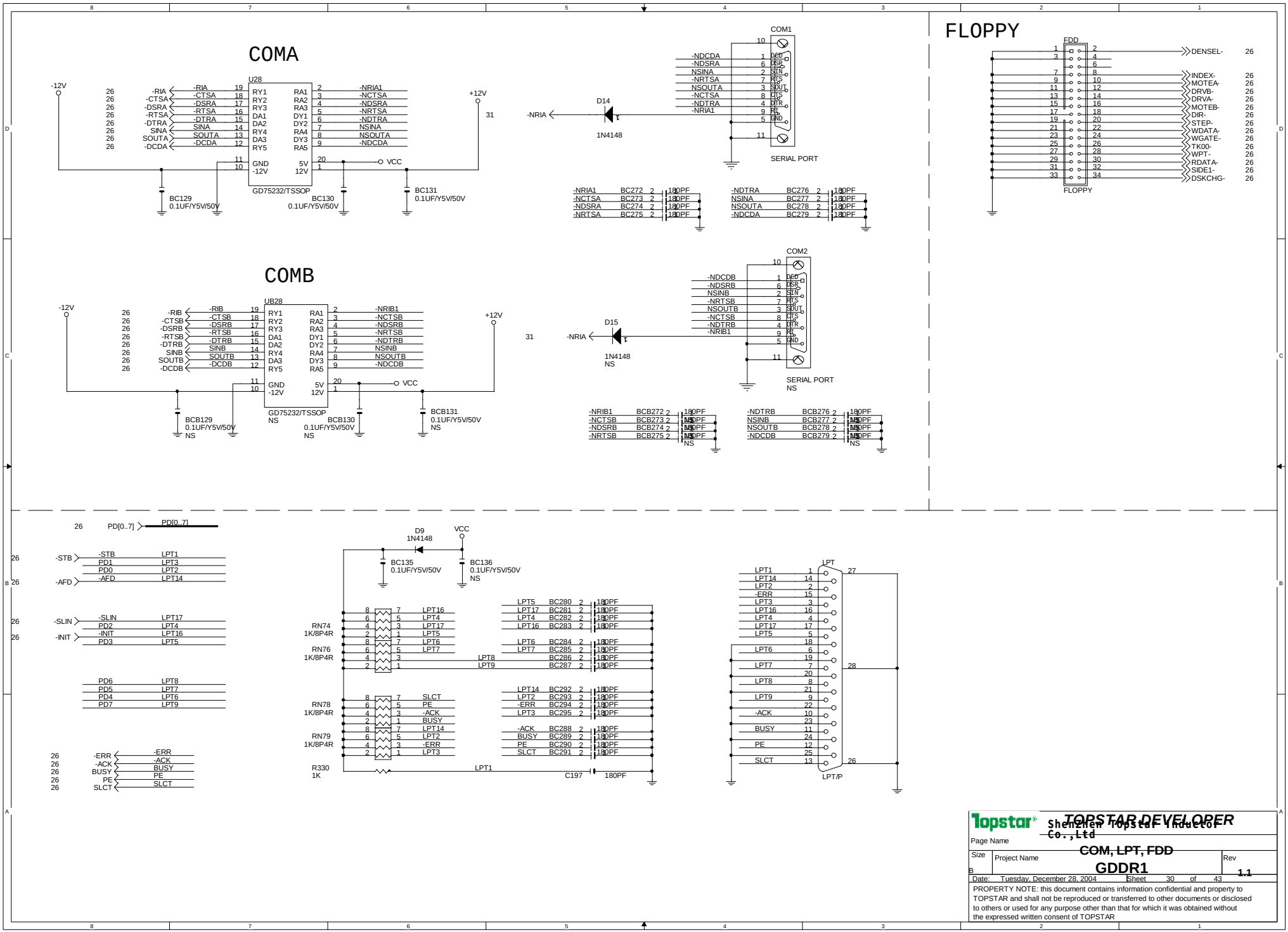

PROPERTY NOTE: this document contains information confidential and property to TOPSTAR and shall not be reproduced or transferred to other documents or disclosed to others or used for any purpose other than that for which it was obtained without the expressed written consent of TOPSTAR

PDF created with pdfFactory trial version www.pdffactory.com

FRONT USB

ICH6 USB2.0

19 -USBP1 -USBP1 -FUSB1
19 +USBP1 +USBP1 +FUSB1

19 -USBP0 -USBP0 -FUSB0
19 +USBP0 +USBP0 +FUSB0

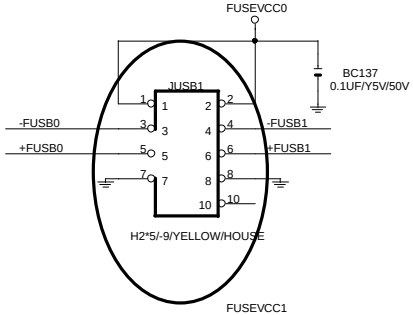

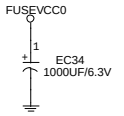

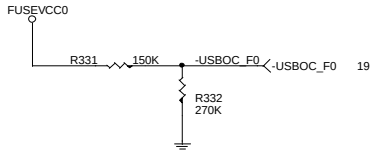

19 +USBP3 +USBP3 +FUSB3
19 -USBP3 -USBP3 -FUSB3

19 +USBP2 +USBP2 +FUSB2
19 -USBP2 -USBP2 -FUSB2

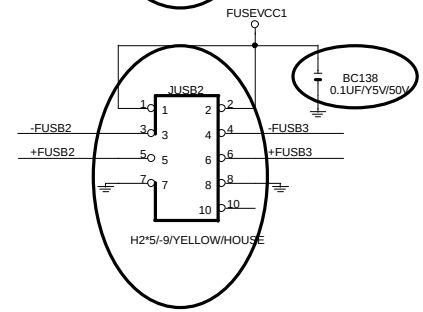

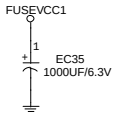

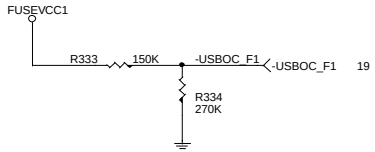

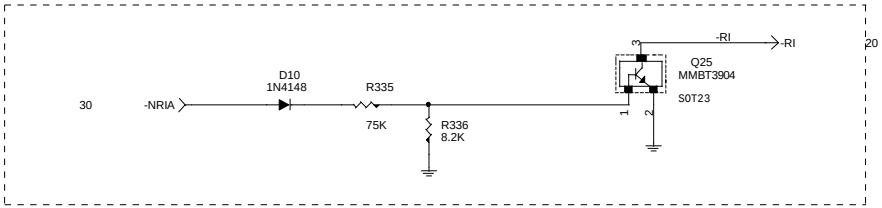

Topstar	TOPSTAR DEVELOPER Shenzhen Topstar Industrial Co.,Ltd	
Page Name	FRONT USB CONNECTOR	
Size: B	Project Name: GDDR1	Rev: 1.1
Date: Tuesday, December 28, 2004	Sheet 31 of 43	

PROPERTY NOTE: this document contains information confidential and property to TOPSTAR and shall not be reproduced or transferred to other documents or disclosed to others or used for any purpose other than that for which it was obtained without the expressed written consent of TOPSTAR

PDF created with pdfFactory trial version www.pdffactory.com

RS2 CLOSE CPU VR MOSFET

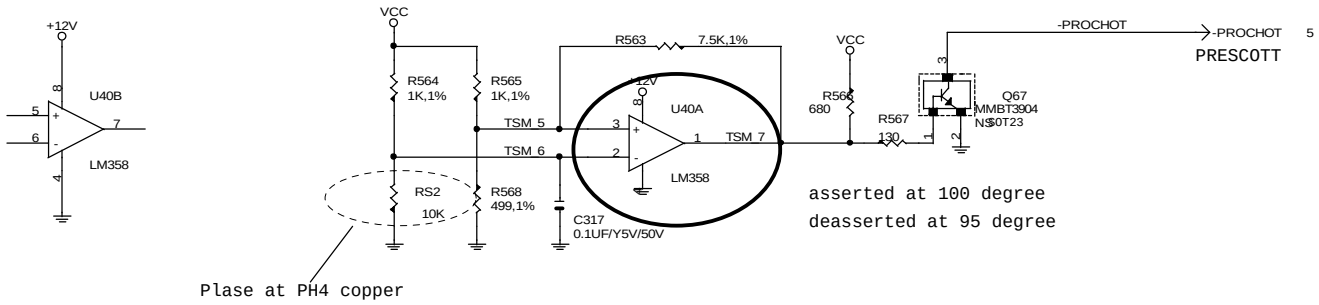

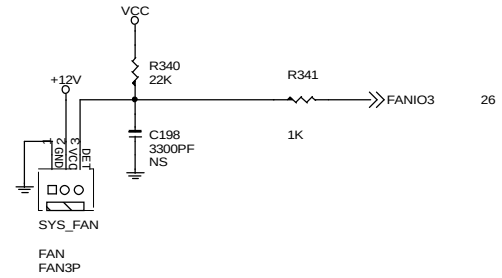

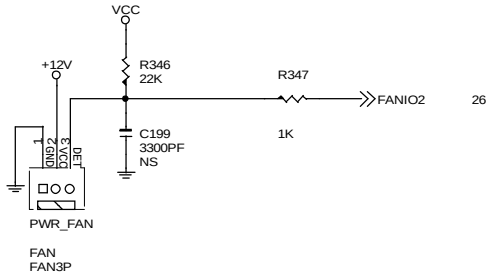

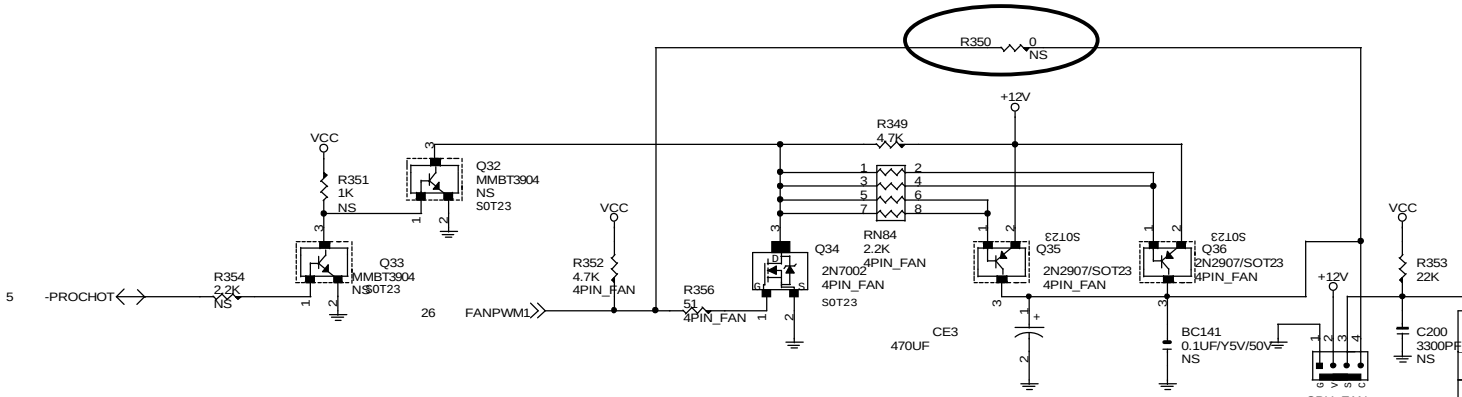

topstar	Shenzhen Topstar Inductor Co.,Ltd	TOPSTAR DEVELOPER
Page Name	FAN CONTROL	
Size: B	Project Name: GDDR1	Rev: 1.1
Date: Tuesday, December 28, 2004	Sheet 32 of 43	

PROPERTY NOTE: this document contains information confidential and property to TOPSTAR and shall not be reproduced or transferred to other documents or disclosed to others or used for any purpose other than that for which it was obtained without the expressed written consent of TOPSTAR

PDF created with pdfFactory trial version www.pdffactory.com

Topstar	TOPSTAR DEVELOPER Shenzhen Topstar Inductor Co.,Ltd		
Page Name	AC97 ALC658		
Size Custom	Project Name GDDR1		Rev 1.1
Date: Tuesday, December 28, 2004	Sheet 33 of 43		

PROPERTY NOTE: this document contains information confidential and property to TOPSTAR and shall not be reproduced or transferred to other documents or disclosed to others or used for any purpose other than that for which it was obtained without the expressed written consent of TOPSTAR

PDF created with pdfFactory trial version www.pdffactory.com

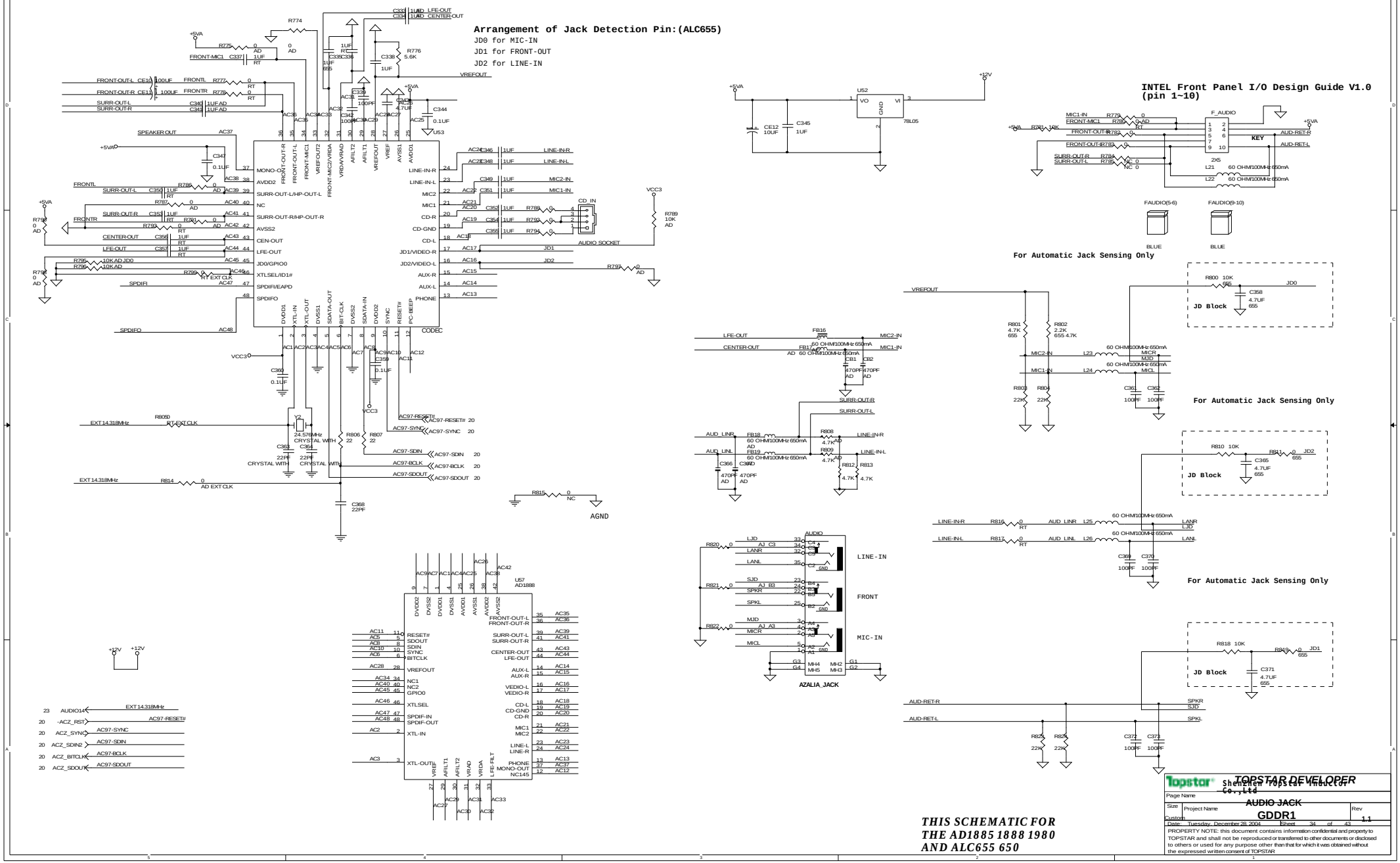

PDF created with pdfFactory trial version www.pdffactory.com

Topstar	TOPSTAR DEVELOPER Shenzhen Topstar Inductor Co.,Ltd		
Page Name	AZALIA ALC880		
Size Custom	Project Name GDDR1		Rev 1.1
Date: Tuesday, December 28, 2004	Sheet 35 of 43		

PROPERTY NOTE: this document contains information confidential and property to TOPSTAR and shall not be reproduced or transferred to other documents or disclosed to others or used for any purpose other than that for which it was obtained without the expressed written consent of TOPSTAR

PDF created with pdfFactory trial version www.pdffactory.com

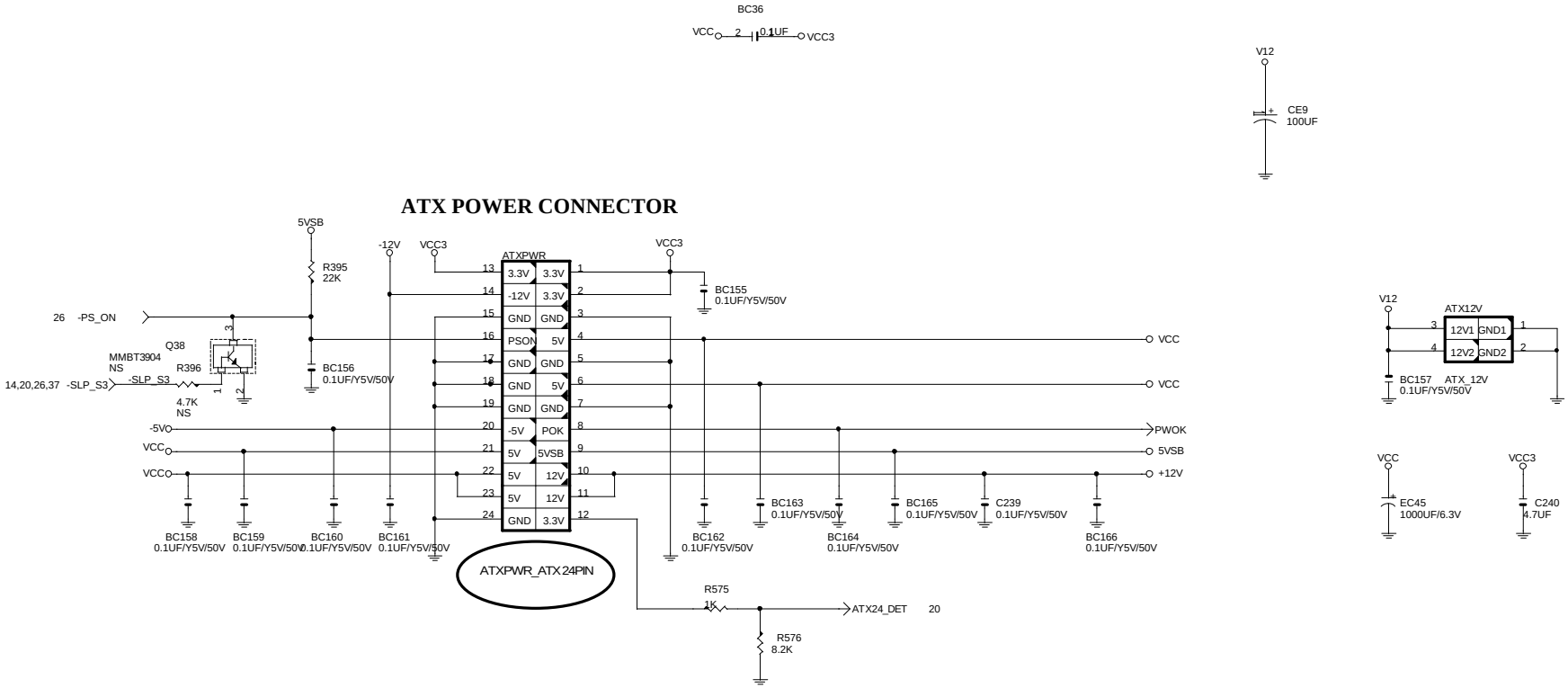

topstar	Shenzhen Topstar Inductor Co.,Ltd		
Page Name	TOPSTAR DEVELOPER		
Size: B	Project Name: ATX POWER CONNECTOR GDDR1	Rev: 1.1	
Date: Tuesday, December 28, 2004	Sheet 36 of 43		

PROPERTY NOTE: this document contains information confidential and property to TOPSTAR and shall not be reproduced or transferred to other documents or disclosed to others or used for any purpose other than that for which it was obtained without the expressed written consent of TOPSTAR

PDF created with pdfFactory trial version www.pdffactory.com

DDR25V FOR DDR DIMM & NB

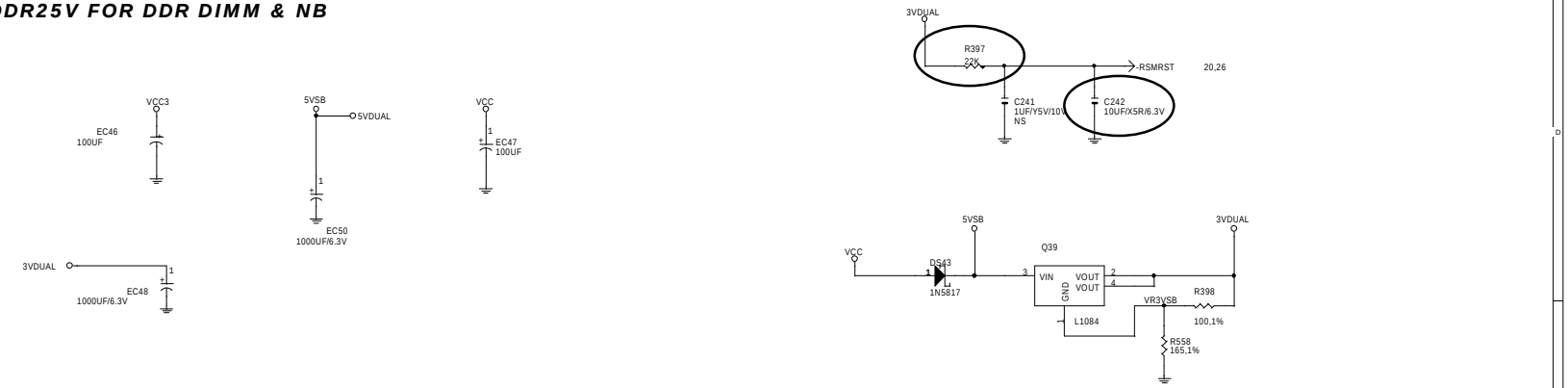

Patch S5 Hi At First AC ON

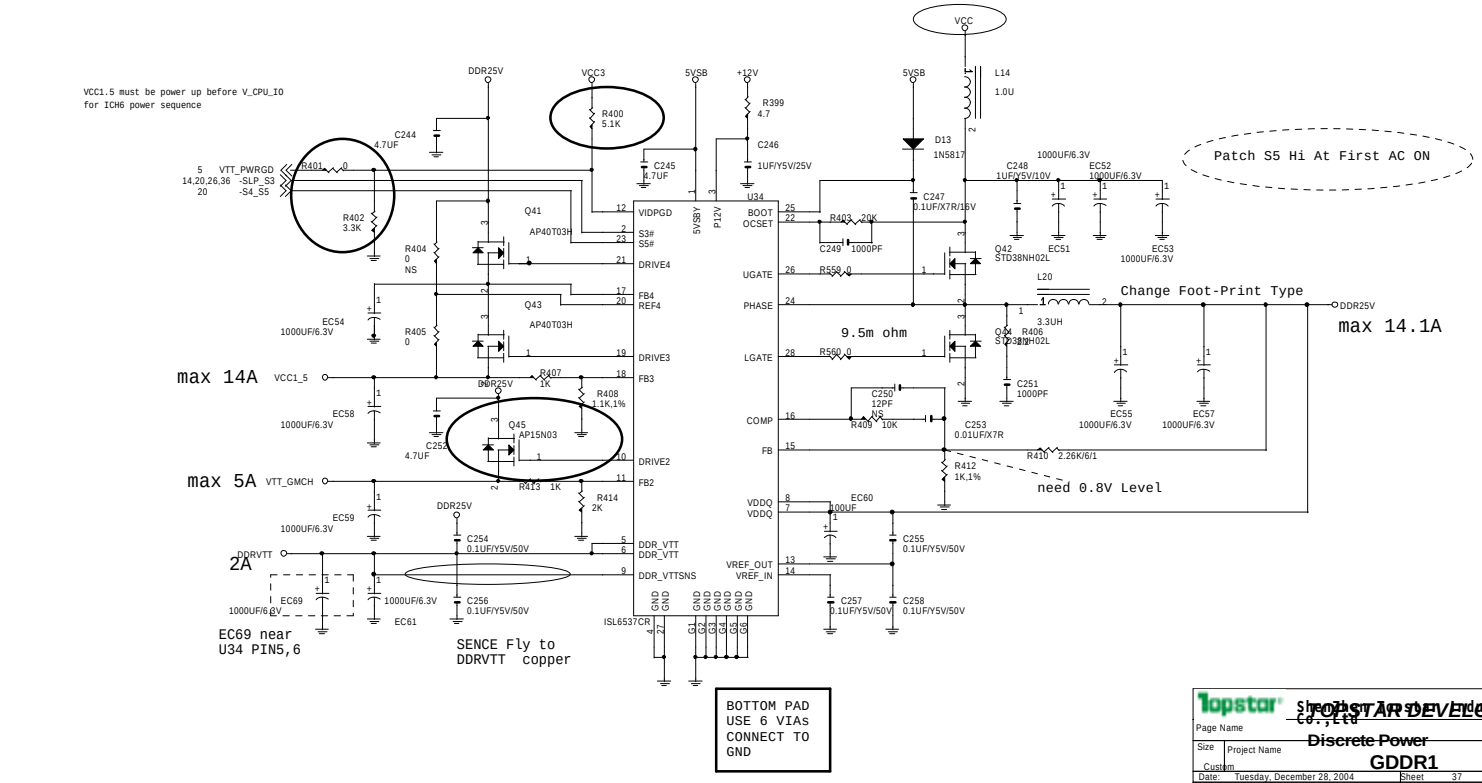

Topstar	Shenzhen TOPSTAR DEVELOPER Co.,Ltd	
Page Name	Discrete Power	
Size: Custom	Project Name: GDDR1	Rev: 1.1
Date: Tuesday, December 28, 2004	Sheet 37 of 43	

PROPERTY NOTE: this document contains information confidential and property to TOPSTAR and shall not be reproduced or transferred to other documents or disclosed to others or used for any purpose other than that for which it was obtained without the expressed written consent of TOPSTAR

PDF created with pdfFactory trial version www.pdffactory.com

CLOSE PS2
CONNECTOR
AND USB

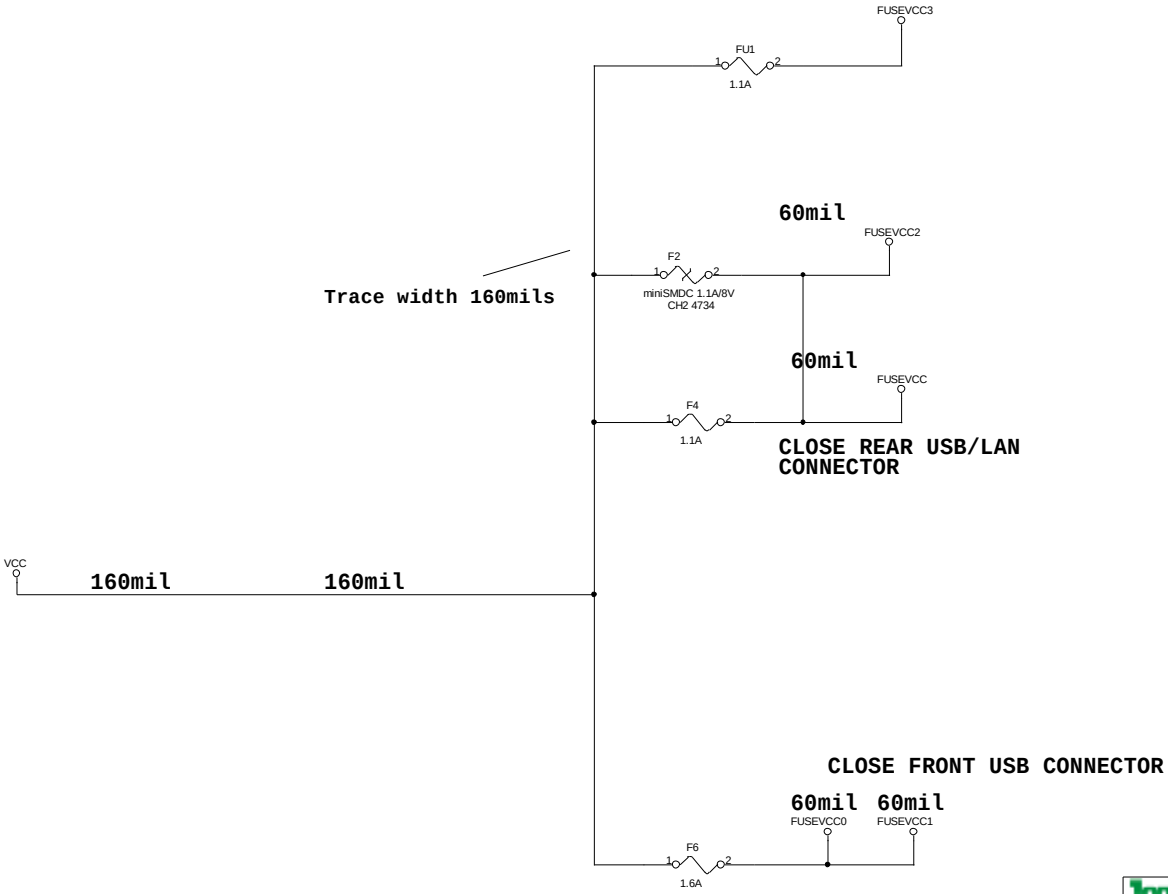

TOPSTAR DEVELOPER

ShenZhen Topstar Inductor Co.,Ltd

Page Name

Size: B | Project Name: POLY SWITCH | Rev: 1.1

GDDR1

Date: Tuesday, December 28, 2004 | Sheet 38 of 43

PROPERTY NOTE: this document contains information confidential and property to TOPSTAR and shall not be reproduced or transferred to other documents or disclosed to others or used for any purpose other than that for which it was obtained without the expressed written consent of TOPSTAR

PDF created with pdfFactory trial version www.pdffactory.com

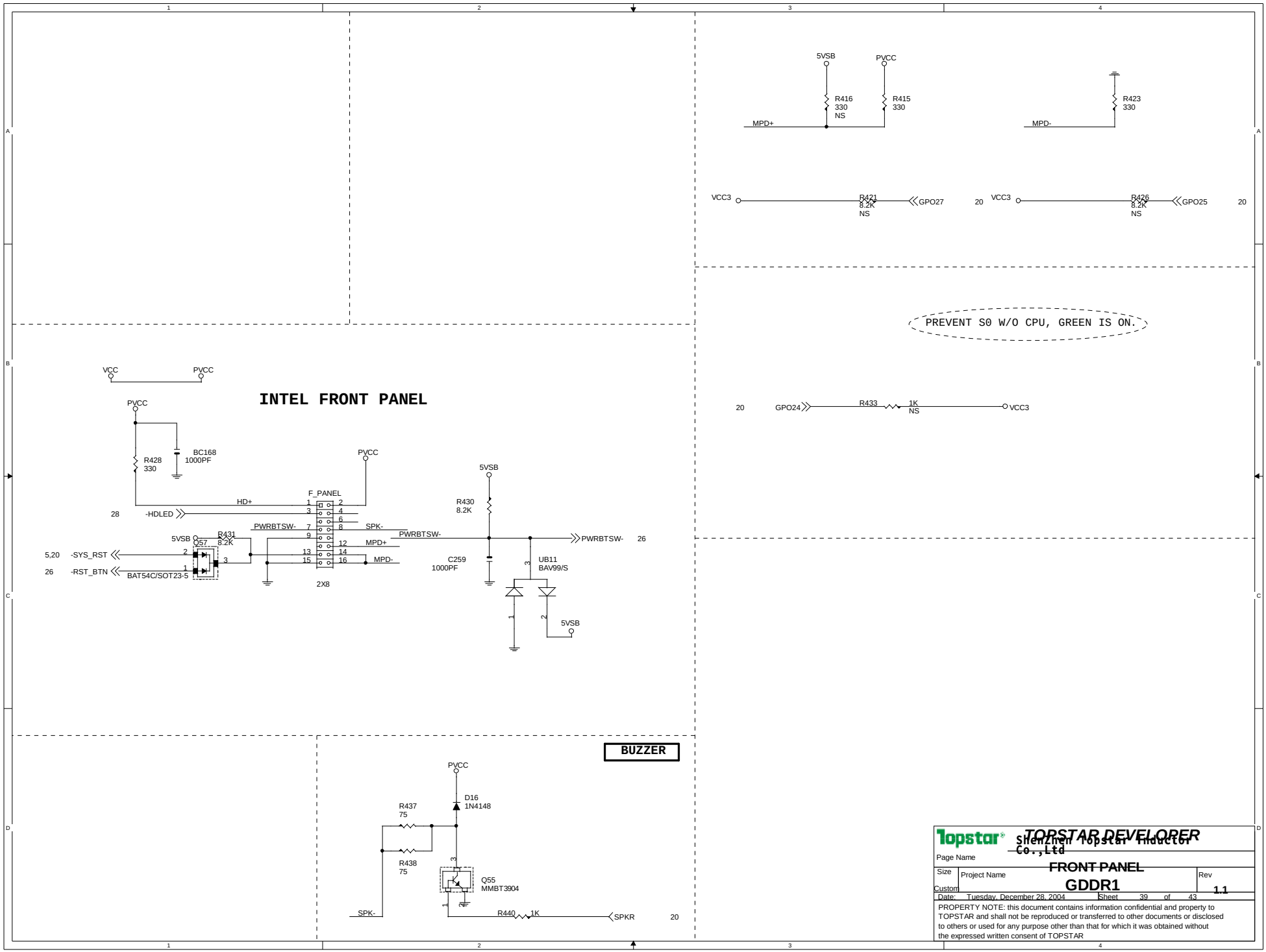

PDF created with pdfFactory trial version www.pdffactory.com

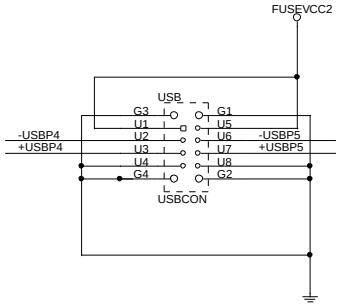

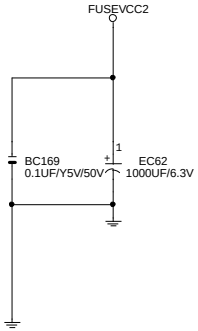

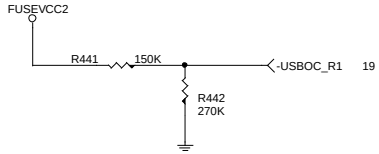

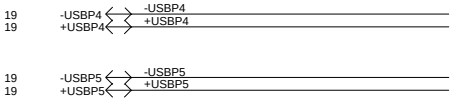

Topstar

TOPSTAR DEVELOPER

Shenzhen Topstar Inductor Co.,Ltd

Page Name: REAR USB CONNECTOR

Size: Custom | Project Name: GDDR1 | Rev: 1.1

Date: Tuesday, December 28, 2004 | Sheet 40 of 43

PROPERTY NOTE: this document contains information confidential and property to TOPSTAR and shall not be reproduced or transferred to other documents or disclosed to others or used for any purpose other than that for which it was obtained without the expressed written consent of TOPSTAR

PDF created with pdfFactory trial version www.pdffactory.com

	RTL8100C	RTL8110S / RTL8169S
AVDDH	N/A	3.3AVDD
V_12P	2.5AVDD	N/A
AVDDL	3.3AVDD	2.5AVDD
V_DAC	N/A	2.5AVDD
DVDD	2.5VDD	1.8VDD
DVDD_A	N/A	1.8VDD

R32 value should be 5.6K (1%) at RTL8100C application, and 2.49K (1%) at RTL8110S(B) application.

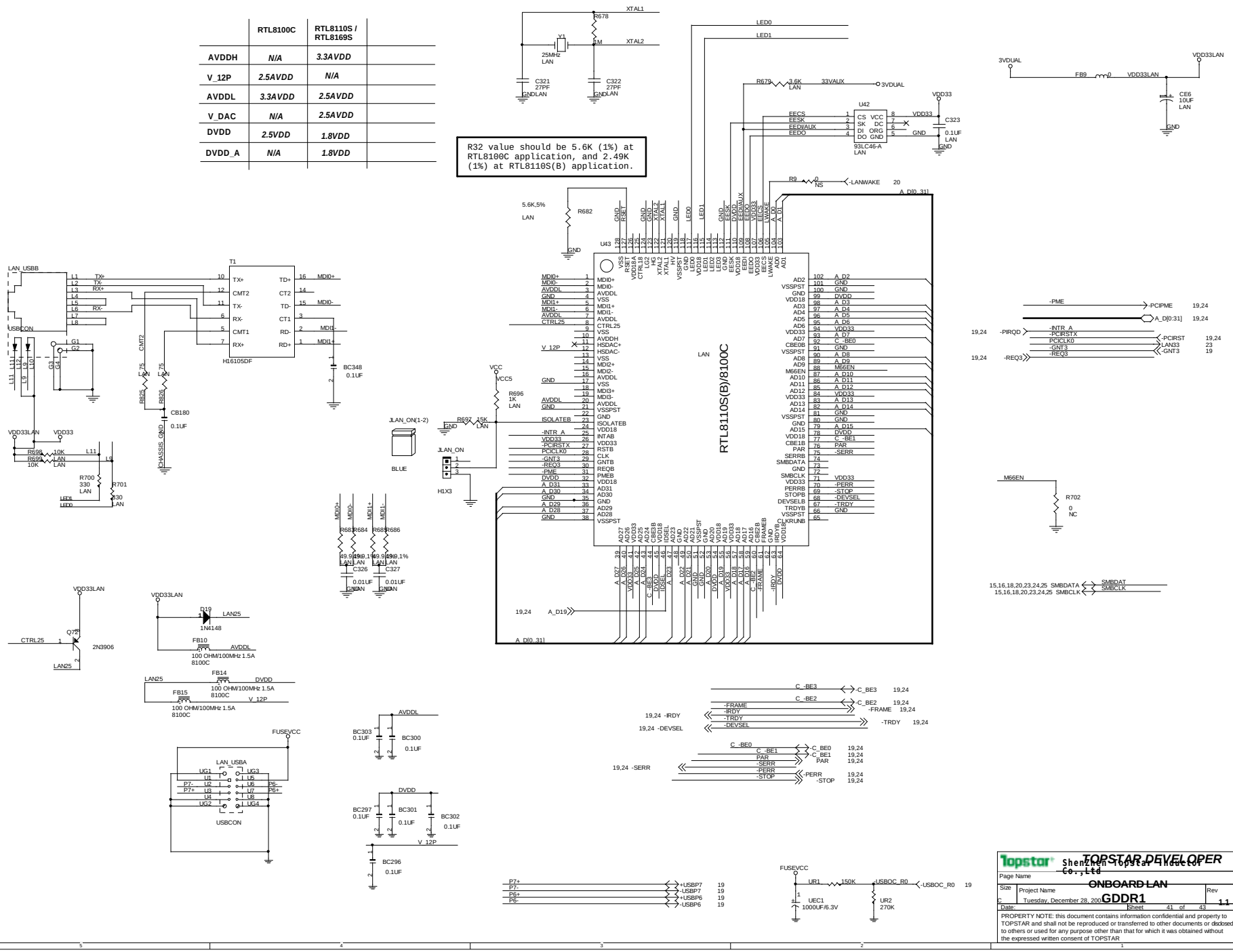

TOPSTAR DEVELOPER

Shenzhen Topstar Inductor Co.,Ltd

Page Name: ONBOARD LAN

Size: C | Project Name: GDDR1 | Rev: 1.1

Date: Tuesday, December 28, 2006 | Sheet 41 of 43

PROPERTY NOTE: this document contains information confidential and property to TOPSTAR and shall not be reproduced or transferred to other documents or disclosed to others or used for any purpose other than that for which it was obtained without the expressed written consent of TOPSTAR

PDF created with pdfFactory trial version www.pdffactory.com

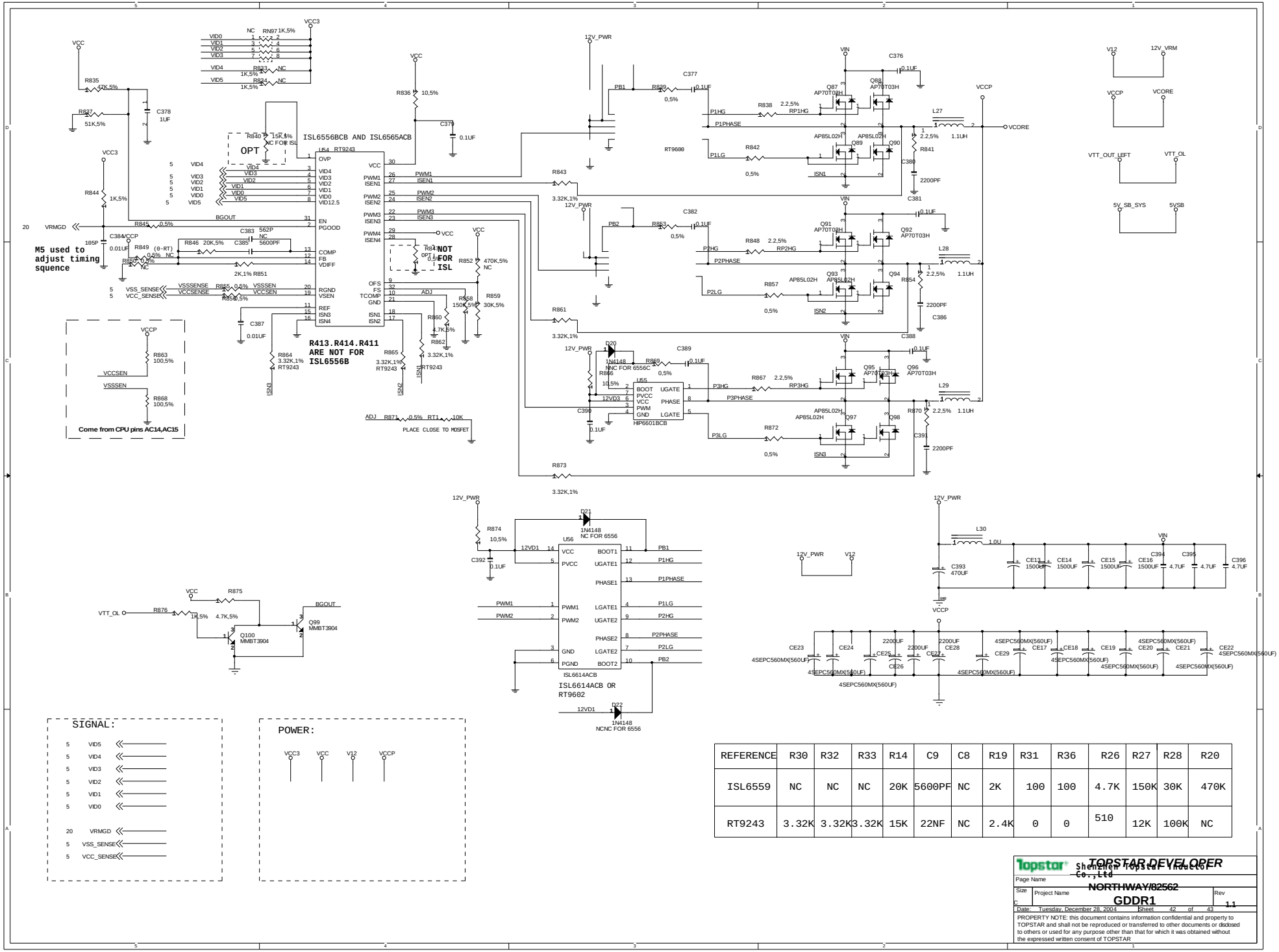

REFERENCE	R30	R32	R33	R14	C9	C8	R19	R31	R36	R26	R27	R28	R20
ISL6559	NC	NC	NC	20K	5600PF	NC	2K	100	100	4.7K	150K	30K	470K
RT9243	3.32K	3.32K	3.32K	15K	22NF	NC	2.4K	0	0	510	12K	100K	NC

Topstar — TOPSTAR DEVELOPER
Shenzhen Topstar Industrial Co.,Ltd
Page Name: NORTHWAY/82562
Size: C | Project Name: GDDR1 | Rev: 1.1
Date: Tuesday, December 28, 2004 | Sheet 42 of 43

PROPERTY NOTE: this document contains information confidential and property to TOPSTAR and shall not be reproduced or transferred to other documents or disclosed to others or used for any purpose other than that for which it was obtained without the expressed written consent of TOPSTAR

PDF created with pdfFactory trial version www.pdffactory.com

Topstar	ShenZhen Topstar Inductor Co.,Ltd	
Page Name		
Size: Custom	Project Name: TPM CONTROLLER GDDR1	Rev: 1.1
Date: Tuesday, December 28, 2004	Sheet 43 of 43	

PROPERTY NOTE: this document contains information confidential and property to TOPSTAR and shall not be reproduced or transferred to other documents or disclosed to others or used for any purpose other than that for which it was obtained without the expressed written consent of TOPSTAR

PDF created with pdfFactory trial version www.pdffactory.com