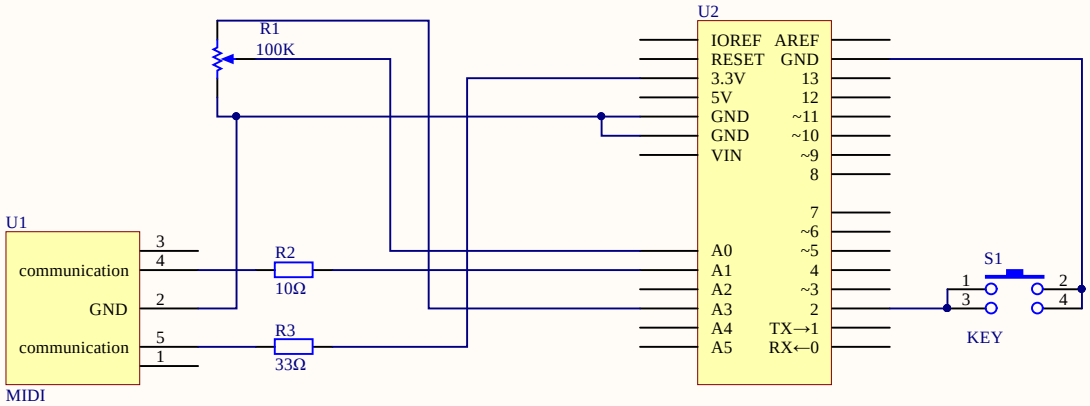

Title		
Size A4	Number	Revision
Date: 2020/4/4		Sheet of
File: C:\Users\..\Sheet1.SchDoc		Drawn By: