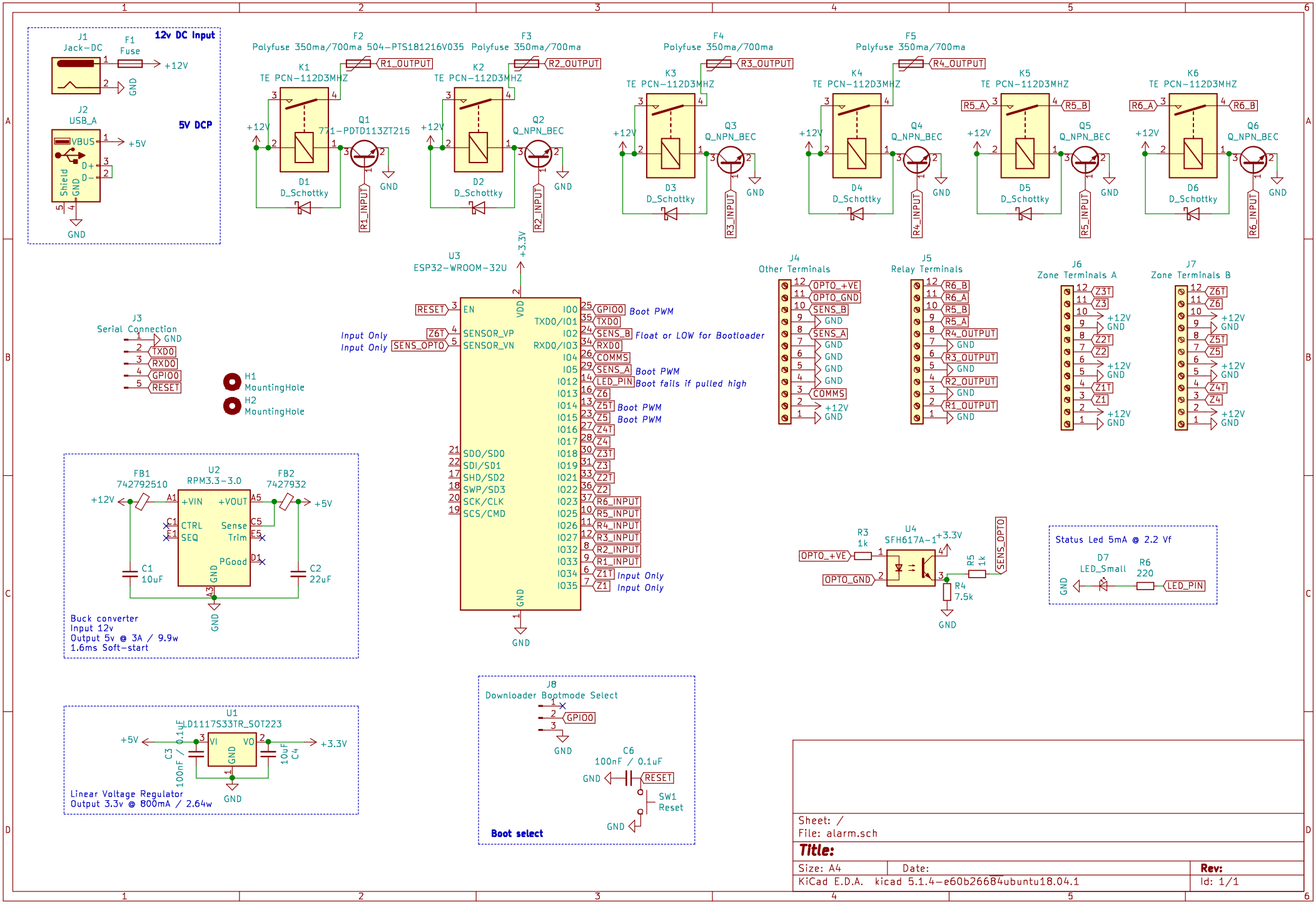
12v DC Input
J1
Jack-DC
F1
Fuse
+12V
GND
J2
USB_A
5V DCP
VBUS
+5V
D+
D-
Shield
GND
F2
Polyfuse 350ma/700ma 504-PTS181216V035
F3
Polyfuse 350ma/700ma
F4
Polyfuse 350ma/700ma
F5
Polyfuse 350ma/700ma
K1
TE PCN-112D3MHZ
K2
TE PCN-112D3MHZ
K3
TE PCN-112D3MHZ
K4
TE PCN-112D3MHZ
K5
TE PCN-112D3MHZ
K6
TE PCN-112D3MHZ
Q1
771-PDTD113ZT215
Q2
Q_NPN_BEC
Q3
Q_NPN_BEC
Q4
Q_NPN_BEC
Q5
Q_NPN_BEC
Q6
Q_NPN_BEC
D1
D_Schottky
D2
D_Schottky
D3
D_Schottky
D4
D_Schottky
D5
D_Schottky
D6
D_Schottky
R1_OUTPUT
R2_OUTPUT
R3_OUTPUT
R4_OUTPUT
R1_INPUT
R2_INPUT
R3_INPUT
R4_INPUT
R5_INPUT
R6_INPUT
R5_A
R5_B
R6_A
R6_B
+3.3V
U3
ESP32-WROOM-32U
RESET
EN
VDD
Z6T
SENSOR_VP
SENS_OPTO
SENSOR_VN
Input Only
Input Only
IO0
TXD0/IO1
IO2
RXD0/IO3
IO4
IO5
IO12
IO13
IO14
IO15
IO16
IO17
IO18
IO19
IO21
IO22
IO23
IO25
IO26
IO27
IO32
IO33
IO34
IO35
SDO/SD0
SDI/SD1
SHD/SD2
SWP/SD3
SCK/CLK
SCS/CMD
GPIO0
TXD0
SENS_B
RXD0
COMMS
SENS_A
LED_PIN
Z6
Z5T
Z5
Z4T
Z4
Z3T
Z3
Z2T
Z2
R6_INPUT
R5_INPUT
R4_INPUT
R3_INPUT
R2_INPUT
R1_INPUT
Z1T
Z1
Boot PWM
Float or LOW for Bootloader
Boot PWM
Boot fails if pulled high
Boot PWM
Boot PWM
Input Only
Input Only
J3
Serial Connection
GND
TXD0
RXD0
GPIO0
RESET
H1
MountingHole
H2
MountingHole
J4
Other Terminals
OPTO_+VE
OPTO_GND
SENS_B
GND
SENS_A
GND
GND
GND
GND
COMMS
+12V
GND
J5
Relay Terminals
R6_B
R6_A
R5_B
R5_A
R4_OUTPUT
GND
R3_OUTPUT
GND
R2_OUTPUT
GND
R1_OUTPUT
GND
J6
Zone Terminals A
Z3T
Z3
+12V
GND
Z2T
Z2
+12V
GND
Z1T
Z1
+12V
GND
J7
Zone Terminals B
Z6T
Z6
+12V
GND
Z5T
Z5
+12V
GND
Z4T
Z4
+12V
GND
FB1
742792510
U2
RPM3.3-3.0
FB2
7427932
+12V
+VIN
+VOUT
+5V
CTRL
SEQ
Sense
Trim
PGood
GND
C1
10uF
C2
22uF
Buck converter
Input 12v
Output 5v @ 3A / 9.9w
1.6ms Soft-start
R3
1k
U4
SFH617A-1
+3.3V
OPTO_+VE
OPTO_GND
R5
1k
SENS_OPTO
R4
7.5k
GND
Status Led 5mA @ 2.2 Vf
D7
LED_Small
R6
220
GND
LED_PIN
U1
LD1117S33TR_SOT223
+5V
VI
VO
+3.3V
C3
100nF / 0.1uF
C4
10uF
GND
Linear Voltage Regulator
Output 3.3v @ 800mA / 2.64w
J8
Downloader Bootmode Select
GPIO0
GND
C6
100nF / 0.1uF
GND
RESET
SW1
Reset
GND
Boot select
Sheet: /
File: alarm.sch
Title:
Size: A4
Date:
Rev:
KiCad E.D.A. kicad 5.1.4-e60b26684ubuntu18.04.1
Id: 1/1